SmartSpot

68033/**/**

User manual
Manual de usuario
Manual do usuário
中文使用手册

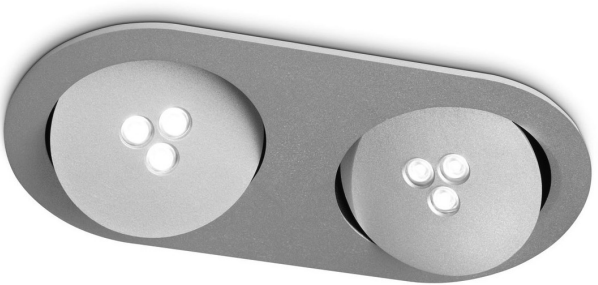

PHILIPS

Incl.

6 x Luxeon Rebel Powerled

A

B

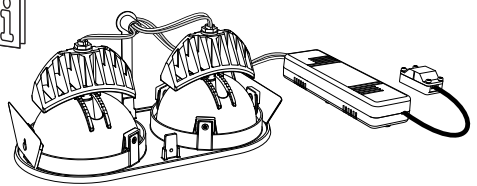

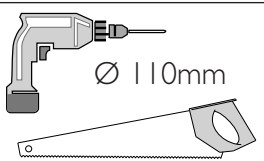

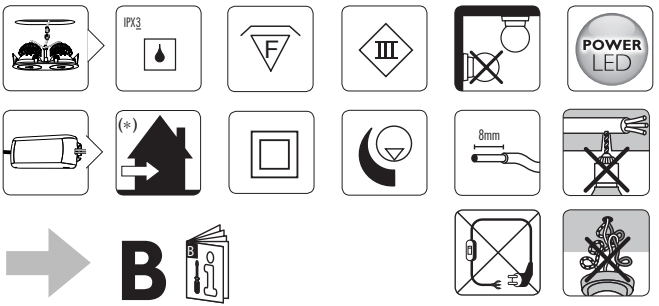

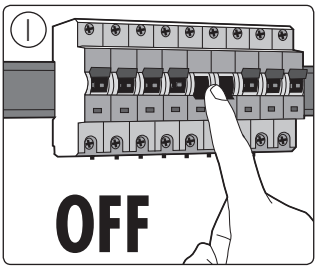
1
OFF

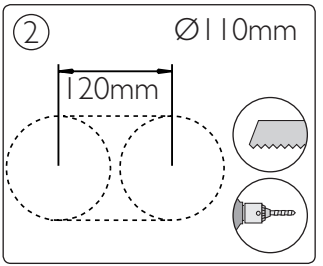
2
Ø110mm
120mm

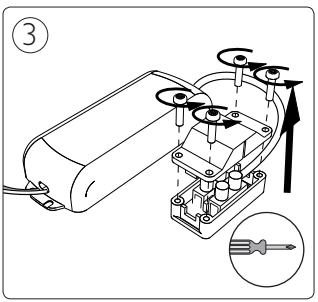
3

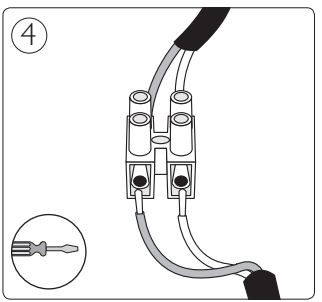
4

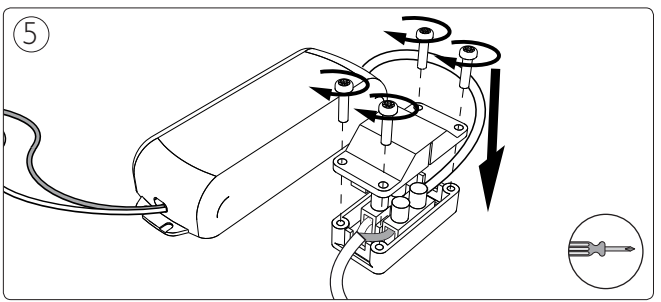
5

⑥

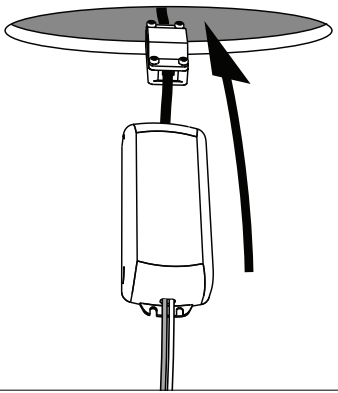

⑦

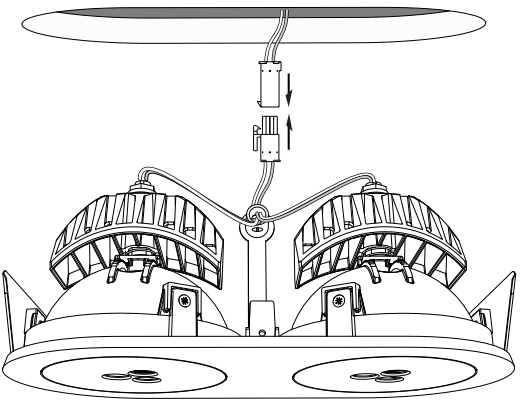

⑧

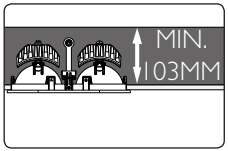

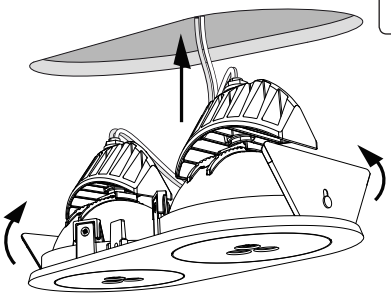

!

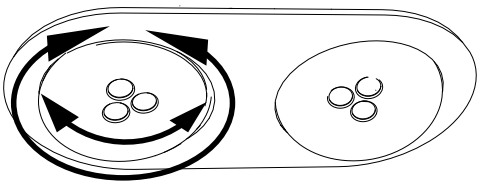

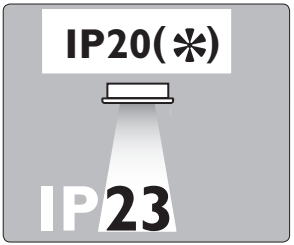
IP20(*)
IP23

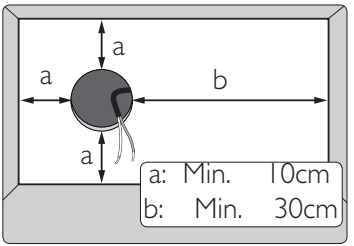
a
a
b
a
a: Min. 10cm
b: Min. 30cm



PHILIPS CONSUMER LUMINAIRES SHENZHEN COMPANY LTD
飞利浦家居灯饰(深圳)有限公司
6 F, Auxiliary Building of Shekou Technology Building,
Nanhai Rd, Shekou,Nanshan District, Shenzhen City
Guangdong Province, 518067 PRC (China)
深圳市南山区南海大道蛇口科技大厦辅楼六层(邮编:518067)

4404.018.02031
Last update: 04/08/10