AKP 450/IX

12NC: 857745001500

GTIN (EAN) code: 8003437934827

SENSING THE DIFFERENCE



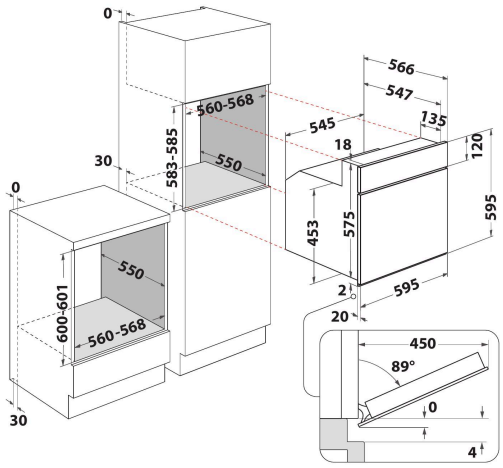

Whirlpool built in electric oven: inox color - AKP 450/ IX

This Whirlpool built in Oven features: advanced electric technology allowing you to cook dishes saving energy. Halogen lamp allowing a more energy-efficient performance.

Multifunction 5
Multiple cooking methods. The Multifunction 5 feature offers flexible cooking options, to ensure perfect results, whatever the recipe.

Small cavity
This Whirlpool Oven features a compact-size cavity.

Energy class
Outstanding energy savings. Ovens with an A/ A+ energy rating offer an excellent level of energy efficiency, ensuring lower consumption and saving you money on your energy bills.

Energy class A
Energy efficient. With its A energy rating, this Whirlpool appliance will allow you to enjoy both ideal performance and excellent energy consumption.

- Energy class A
- Cavity 56 L
- Defrost function
- Grill
- Easy Clean Enamel Interior
- Turbo grill function
- Pastry function
- Conventional Cooking
- Metal handle
- Door Glasses Number: 2
- Protuding handle
- Switch-off timer
- Grill 1400 W
- 1 Grid
- 1 Tray
- Mechanic programmer
- Mirror Glass and Inox Bottom Front Trim

AKP 450/IX

12NC: 857745001500

GTIN (EAN) code: 8003437934827

Whirlpool
SENSING THE DIFFERENCE

MAIN FEATURES

Product group	Oven
Commercial code	AKP 450/IX
Main colour of product	Inox
Construction type	Built-in
Type of control	Mechanical
Type of control settings	-
Are any hobs controls integrated?	No
Which kind of hobs can be controlled?	-
Automatic programmes	No
Current (A)	13
Voltage (V)	220-240
Frequency (Hz)	50/60
Length of Electrical Supply Cord (cm)	90
Plug type	No
Depth with open door 90 degree (mm)	-
Height of the product	595
Width of the product	595
Depth of the product	564
Minimum niche height	0
Minimum niche width	0
Niche depth	0
Net weight (kg)	34
Usable volume (of cavity)	56
Integrated Cleaning system	No
Grids of the cavity	1
Trays	1

TECHNICAL FEATURES

Timer	-
Time control	Mechanical
Time-setting options	No delay options
Safety device	-
Interior light	Yes
Number of interior lights of the cavity	1
Position of interior lights of the cavity	Rear
Oven guides of the cavity	Wall-embedded
Probe of the cavity	No

PERFORMANCES

Energy input	Electric
Type of energy of the cavity	Electricity
Energy efficiency class - NEW (2010/30/EU)	A
Energy consumption per cycle conventional - NEW (2010/30/EU)	0.75
Energy consumption per cycle forced air convection - NEW (2010/30/EU)	0.84

