PHILIPS

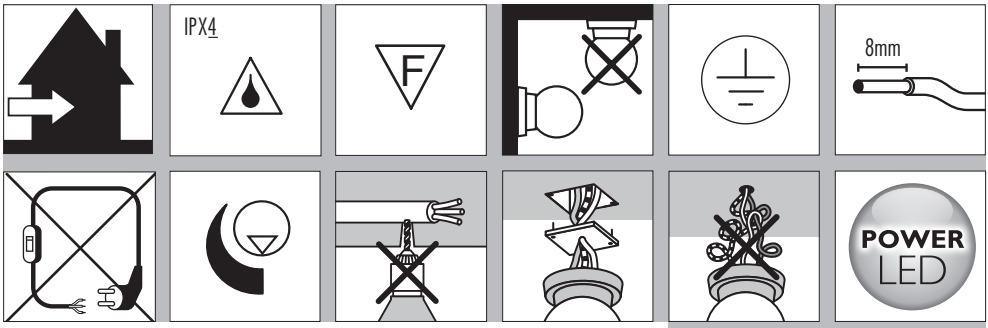

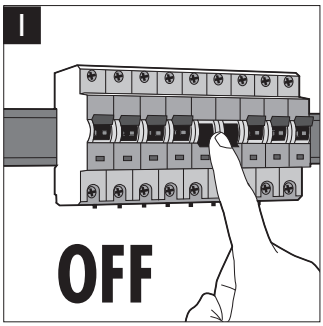

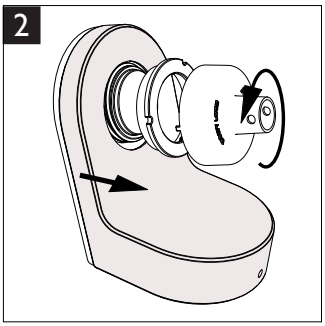

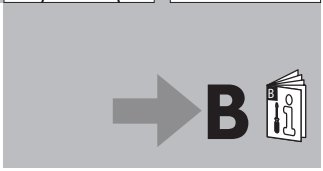

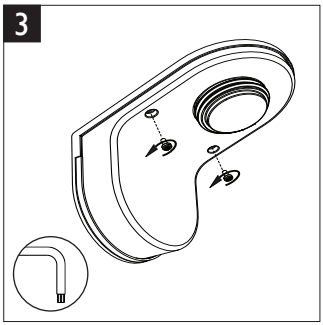

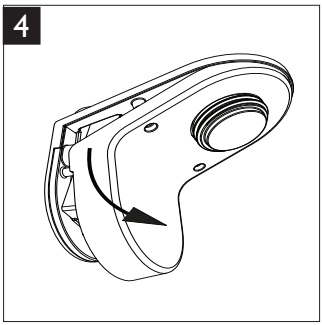

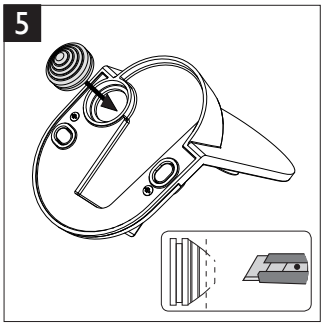

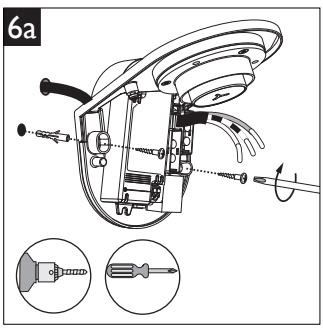

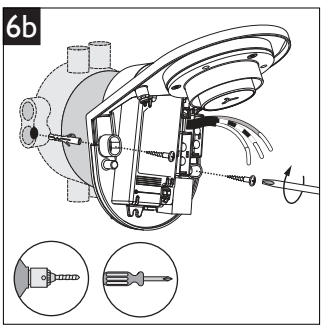

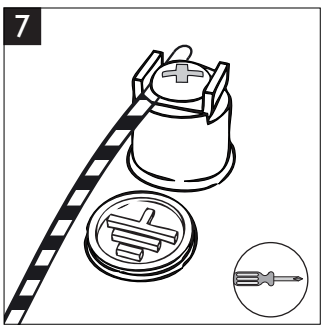

© Copyright

4404018208511.indd 1 11/7/2011 5:14:52 PM

PHILIPS

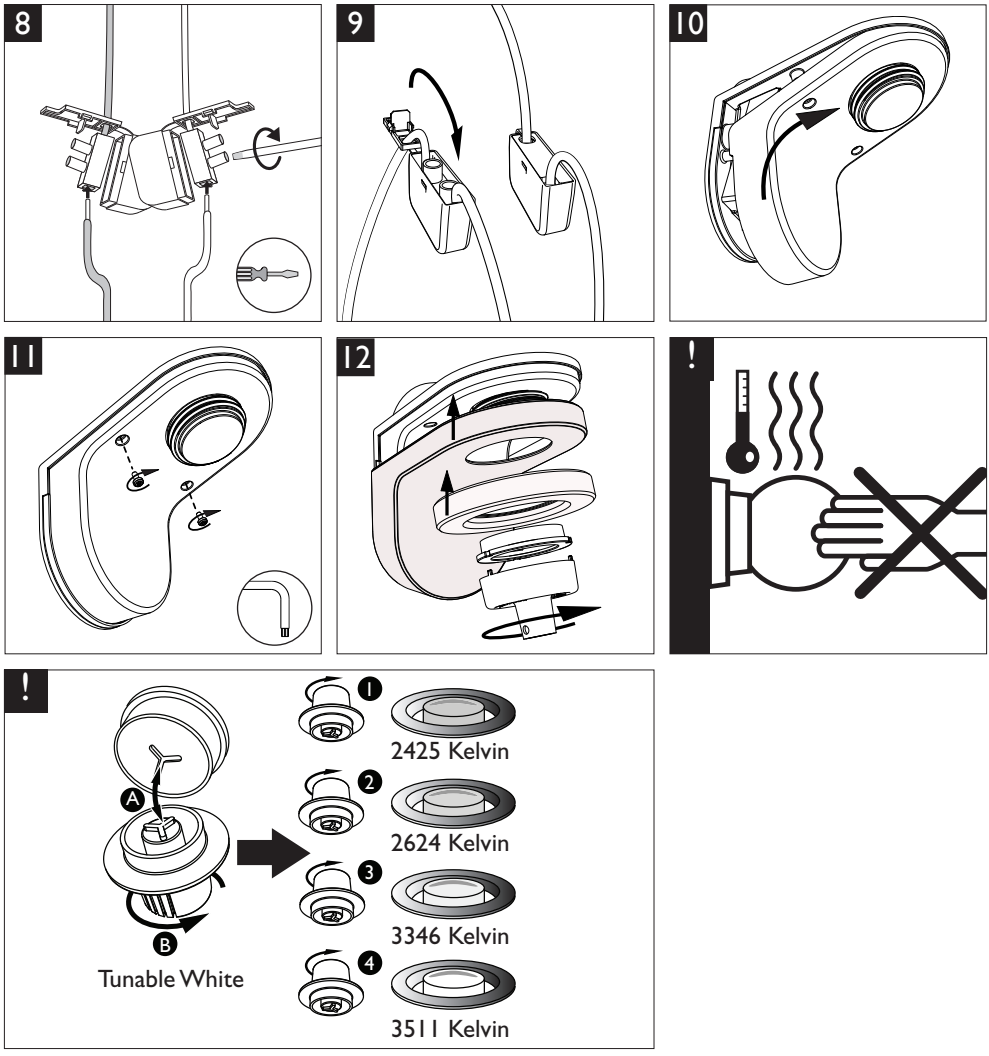

440401820851.indd 2 11/7/2011 5:14:54 PM

PHILIPS

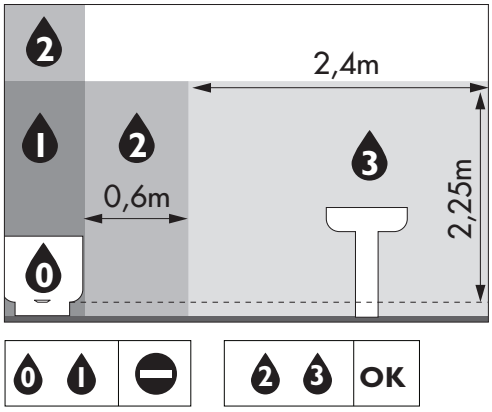

PHILIPS CONSUMER LUMINAIRES SHENZHEN COMPANY LTD
飞利浦家居灯饰(深圳)有限公司
6 F, Auxiliary Building of Shekou Technology Building,
Nanhai Rd, Shekou,Nanshan District, Shenzhen City
Guangdong Province, 518067 PRC (China)
深圳市南山区南海大道蛇口科技大厦辅楼六层(邮编:518067)

440401820851.indd 3 11/7/2011 5:14:55 PM