PHILIPS

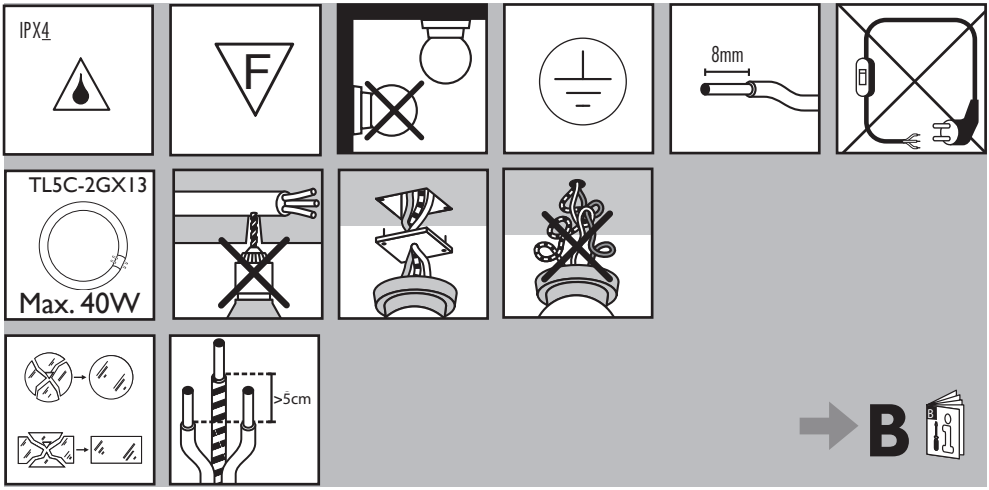

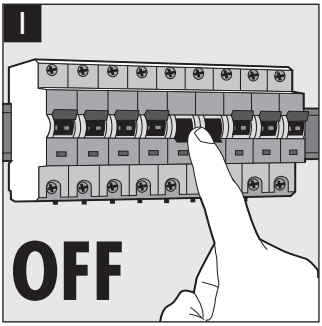

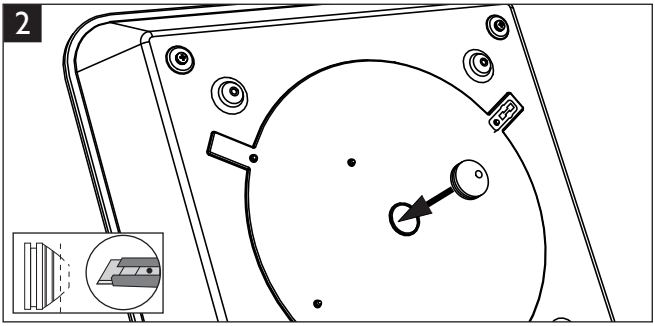

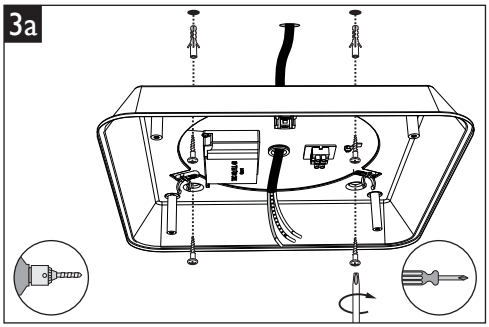

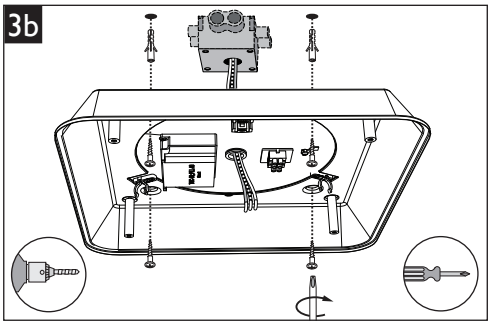

© Copyright

PHILIPS

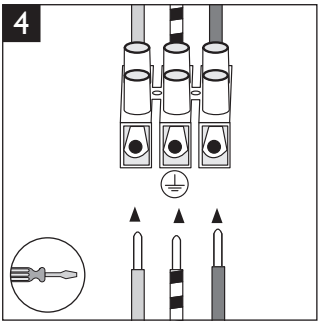

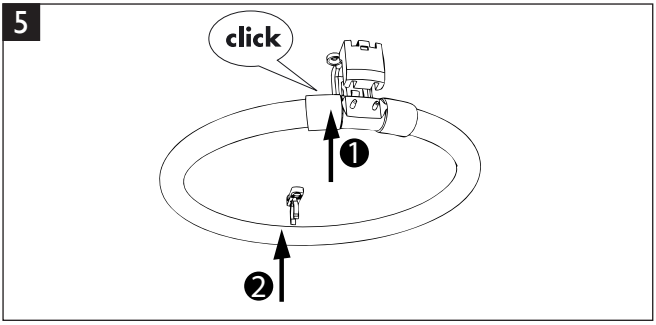

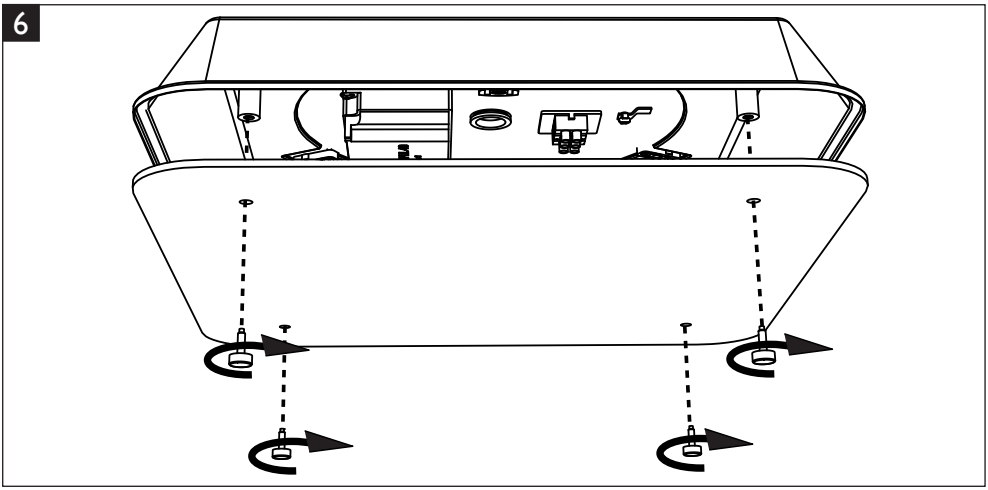

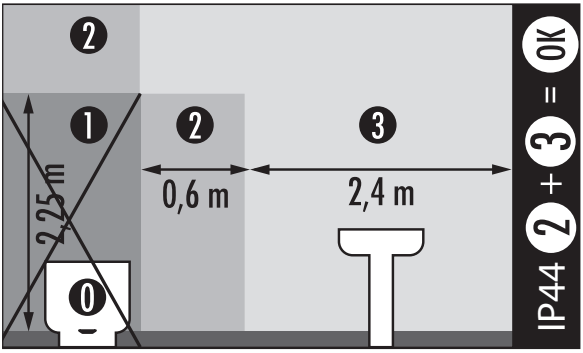

PHILIPS CONSUMER LUMINAIRES SHENZHEN COMPANY LTD
飞利浦家居灯饰(深圳)有限公司
6 F, Auxiliary Building of Shekou Technology Building,
Nanhai Rd, Shekou,Nanshan District, Shenzhen City
Guangdong Province, 518067 PRC (China)
深圳市南山区南海大道蛇口科技大厦辅楼六层(邮编:518067)