Ledino

69055/**/**

User manual
Manual de usuario
Manual do usuário
中文使用手册

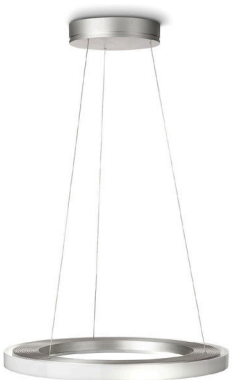

PHILIPS

Incl.

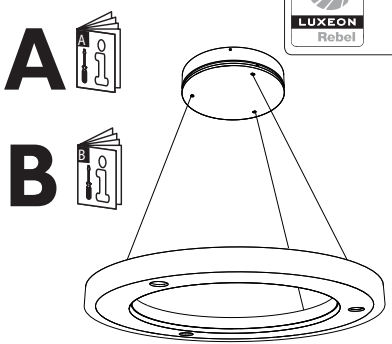
A
B
LUXEON
Rebel
9 x Luxeon Rebel
Powerled
2x

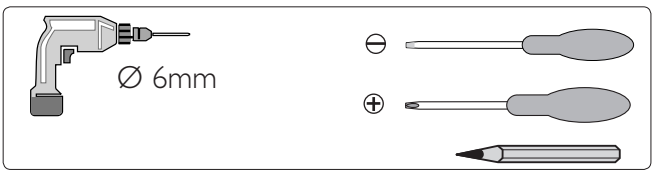
Ø 6mm

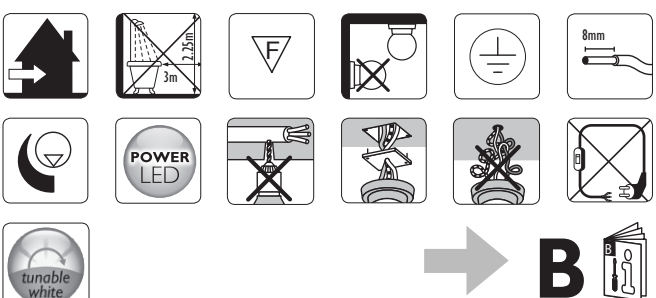
3m
2.25m
F
8mm
POWER
LED
tunable
white
B

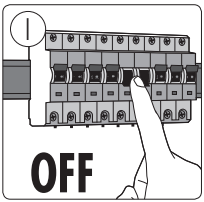
1
OFF

2

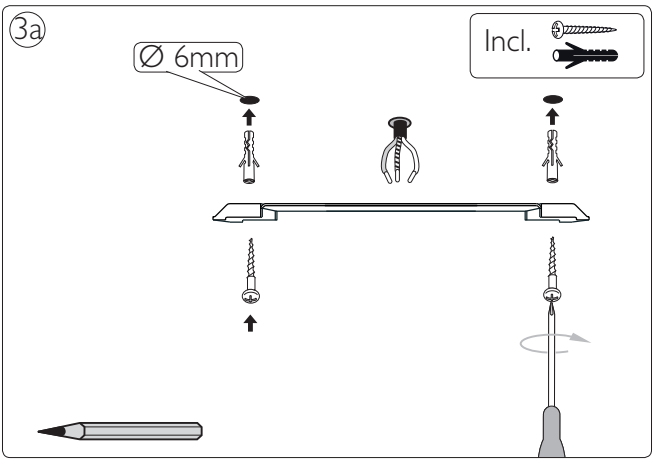
3a
Ø 6mm
Incl.

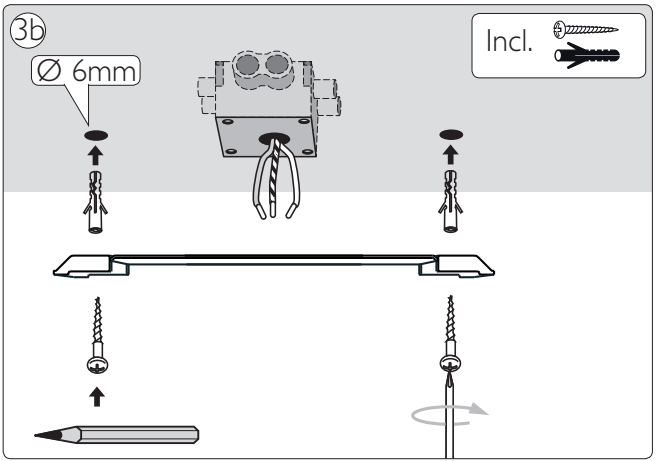
3b
Ø 6mm
Incl.

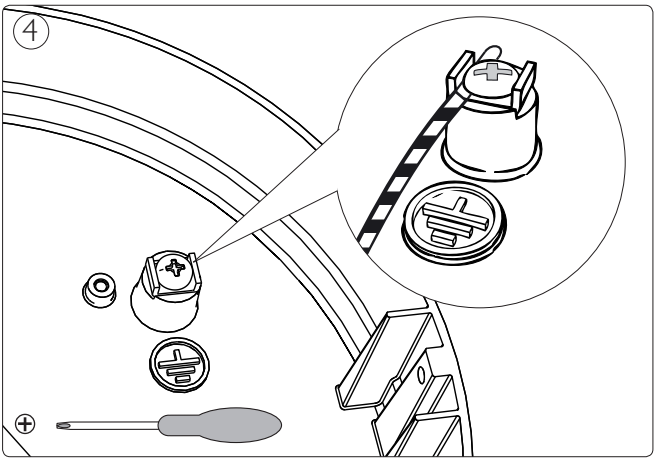
4

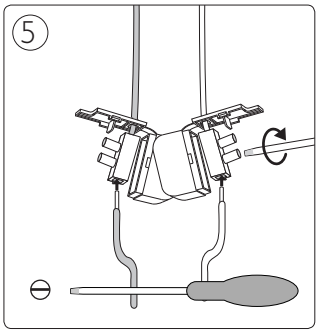
5

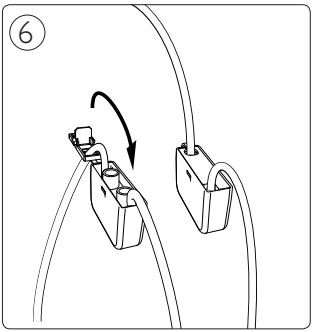
6

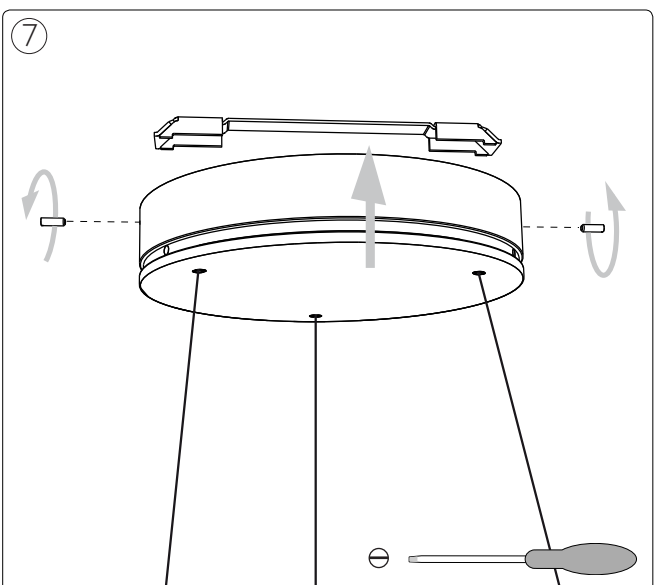
7

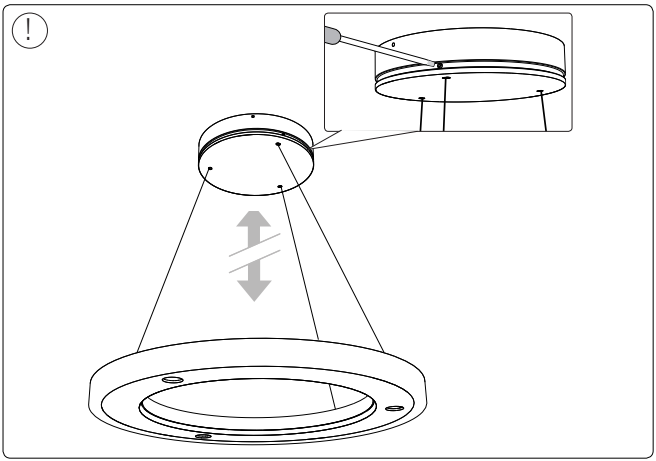

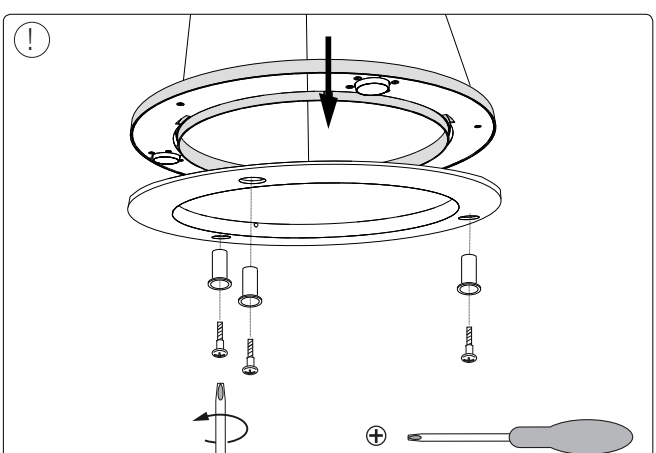

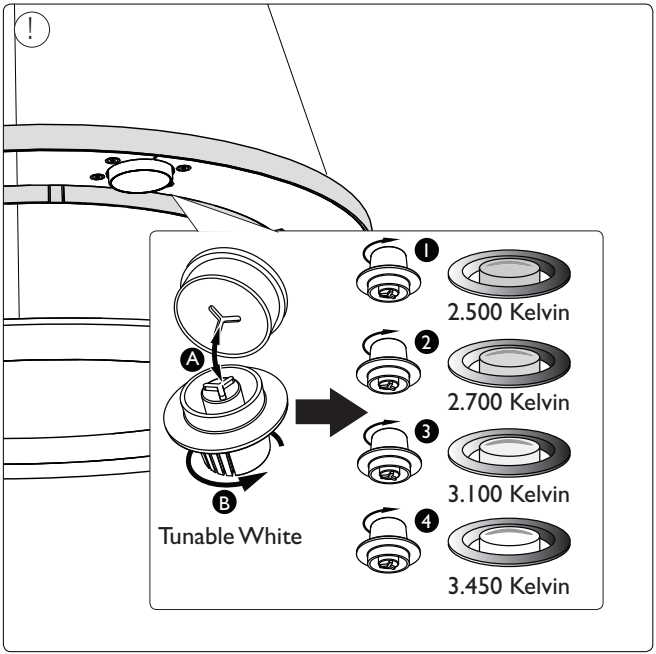
!
A
B
Tunable White
1
2.500 Kelvin
2
2.700 Kelvin
3
3.100 Kelvin
4
3.450 Kelvin



PHILIPS CONSUMER LUMINAIRES SHENZHEN COMPANY LTD
飞利浦家居灯饰(深圳)有限公司
6 F, Auxiliary Building of Shekou Technology Building,
Nanhai Rd, Shekou,Nanshan District, Shenzhen City
Guangdong Province, 518067 PRC (China)
深圳市南山区南海大道蛇口科技大厦辅楼六层(邮编:518067)

4404.018.05711
Last update: 14/12/10