68068/**/**

User manual
Manual de usuario
Manual do usuário
中文使用手冊

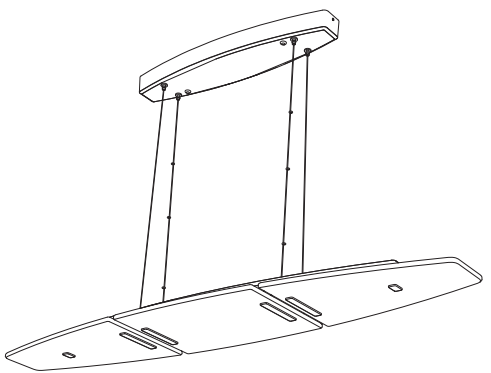

PHILIPS

Incl.



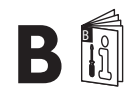

2x 

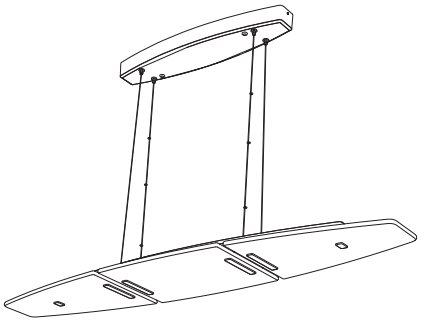

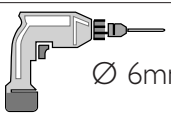

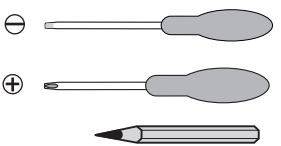



























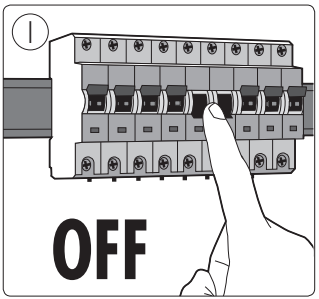
1
OFF

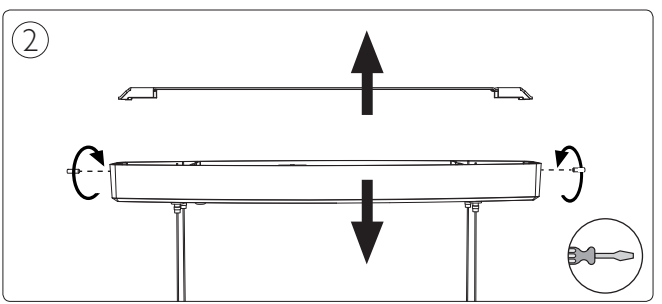
2

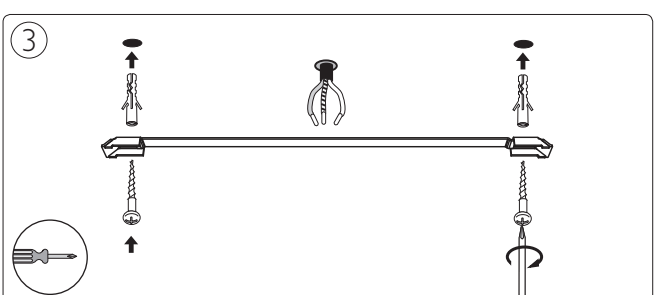
3

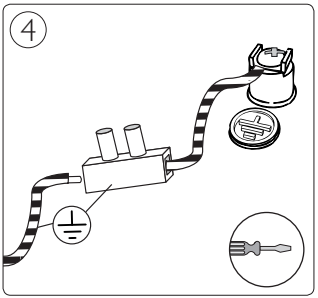
4

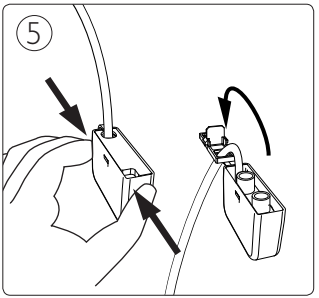
5

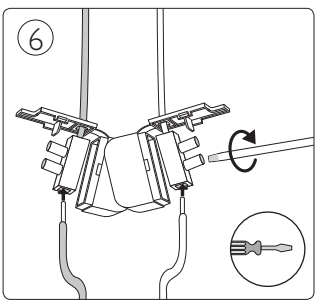
6

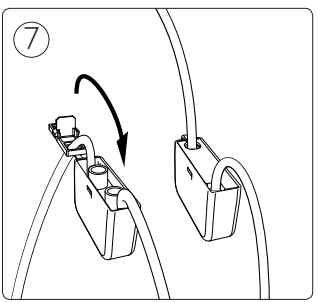
7

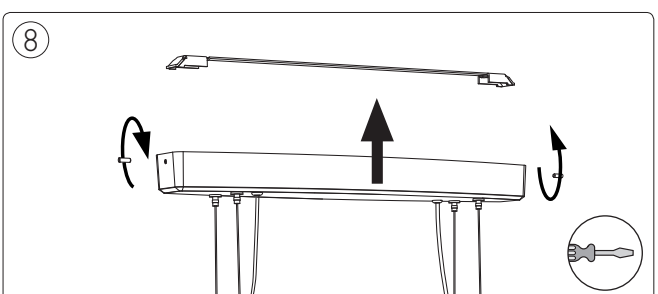
8

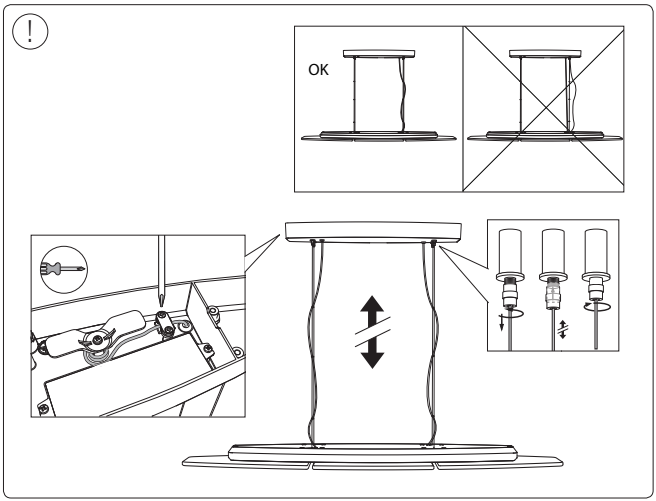
!
OK



PHILIPS CONSUMER LUMINAIRES SHENZHEN COMPANY LTD
飞利浦家居灯饰(深圳)有限公司
6 F, Auxiliary Building of Shekou Technology Building,
Nanhai Rd, Shekou,Nanshan District, Shenzhen City
Guangdong Province, 518067 PRC (China)
深圳市南山区南海大道蛇口科技大厦辅楼六层(邮编:518067)

4404.018.36921
Last update: 14/08/12