BEFORE USING THE APPLIANCE FOR THE FIRST TIME CAREFULLY READ THIS QUICK REFERENCE GUIDE AND THE ASSEMBLY INSTRUCTIONS!

THE CONTROL PANEL OF THIS DISHWASHER ACTIVATES PUSHING ANY BUTTON EXCEPT CANCEL/OFF BUTTON.
FOR ENERGY SAVING THE CONTROL PANEL DEACTIVATES AUTOMATICALLY AFTER 30 SECONDS IF NO CYCLE HAS STARTED.

WASH TIME DISPLAY
Indicated the cycle duration and the remaining time (h:min). With "Delayed start" selected it indicates the time remaining until program start (h.00) - below 1h (0:min).
If "Fx Ey" messages appears on the display, see page 9 - chapter "What to do if...".

RINSE AID INDICATOR
When lit (at the end of the cycle), the rinse aid dispenser needs to be refilled.

SALT INDICATOR
When lit (at the end of the cycle), the salt reservoir needs to be refilled.

5019 300 00692

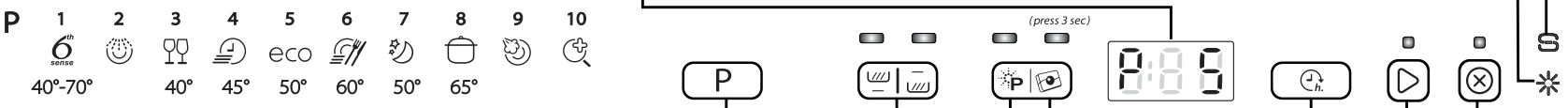

PROGRAM SELECTION BUTTON
Push "P" button (repeatedly) until selected program number is shown on the display (P1...Px) - see "Table of programs" - next page).

MULTIZONE
Allows you to choose the washing zones. Press this button (repeatedly) to select the wash zones:

- both racks
- only lower rack
- only upper rack (including cutlery rack)
- - indicator lits

POWER CLEAN
Thanks to the additional power jets this option provides a more intensive and powerful wash in the lower rack, in the specific area. This option is recommended for washing pots and casseroles (see page 7). Press this button to activate Power Clean (the indicator lights up). For non Power Clean loading to achieve best cleaning performances and resources optimization, Power Clean should be switched off.

TABLET SETTING
This setting allows to optimize the cycle performances according the type of detergent used. Push the Tablet button for 3 seconds (until the indicator lights up) if you are using the combined detergents in tablet (rinse aid, salt and deteregent in 1 dose).
If you are using powder detergent or liquid detergent, the Tablet indicator on the control panel has to be off.

DELAYED START BUTTON
Push the button (repeatedly) to delay the start of the program. Adjustable from 1 to 24 hours. With each press of the button, the delayed start indicator increases by one hour and after 24 restarts from 0. Then press the START button. The dishwasher will start after the set time.

START/RESUME BUTTON
Push this button to start the selected program: the indicator lights up and goes off at the end of the program.
When the door is opened during a washing cycle, the cycle is temporarily paused: the Start indicator blinks.
To resume the cycle push Start button and close the door within 3 seconds.

CANCEL/OFF BUTTON
Push this button to switch off the control panel.
If pressed when a program is running it cancels the program ongoing draining water for 1 minute (0:01 is shown into the display).
If pressed when the dishwasher is switched off, it drains any possible liquids from dishwasher (1 minute process).

Table of programs						Deter-gent	Consumption			Drying Phase
Programs				Available options	Loading instructions		Litres	kWh	Minutes [1]	
P1	6th sense	6th Sense Power Clean	40-70°C	Delay Multizone Power Clean	Use for normal soiled dishes with dried-on food. Senses the level of soiling on the dishes and adjusts the program accordingly. When the sensor is detecting the soil level an animation appears in the display and the cycle duration is updated. The Power Clean option is activated automatically with this program. To deactivate, press the Power Clean button on the control panel.	X	7-15	1.00-1.70	70-172	Full
P2		Pre-Wash	cold	Delay Multizone	Crockery to be washed later.	—	4.0	0.01	14-16	NO
P3		Fragile	40°C	Delay Multizone	Light soiling, for example glasses and cups.	X	10.5	0.85	105-114	Light
P4		Rapid	45°C	Delay Multizone	Lightly soiled crockery, with no dried-on food.	X	11.0	0.85	30-50	NO
P5 ♻	eco	Eco [2]	50°C	Delay Multizone Power Clean	Normally soiled crockery. Standard Program the most efficient in terms of its combined energy and water consumption.	X	7.0	0.92	250	Full
P6		Fast Daily	60°C	Delay Multizone	Normally soiled crockery.	X	11.0	1.30	80-95	Full
P7 ♻		Silent	50°C	Delay Multizone	Normally soiled crockery, gentle and quiet thanks to the lower spray pressure (39 dbA).	X	10.0	1.20	290-299	Light
P8 ♻		Intensive	65°C	Delay Multizone Power Clean	Recommended program for heavily soiled crockery, especially suitable for pans and saucepans.	X	11.0	1.60	165-175	Full
P9 ♻		Steam		Delay Multizone Power Clean	Program including steam action dedicated for heavily soiled crockery, pots and pans. Soaking or hand pretreatment is no longer needed.	X	11.0	1.75	180-190	Full
P10		Hygiene [3]		Delay Multizone Power Clean	Normally or heavily soiled crockery, with additional antibacterial wash. Program interruption (e.g. due to door opening) can compromise elimination of germs.	X	14.0	1.40	110-120	Full

1) Program data obtained in conformity with European standard EN 50242, obtained under normal conditions (without any options) and may vary depending on conditions. Differences of up to 20 minutes are possible with sensor programs as a result of the appliance's automatic calibration system.
2) Reference program for energy label in compliance with EN 50242 regulations. - Note for Testing Institutes: for detailed information on the EN/Standard loading comparison test and other tests, contact the following address: "contact@whirlpool.com".
3) The antibacterial action has been tested by the Institut Pasteur of Lille (France), based on the NF EN 13697 standard of November 2001.

♻ **RECYCLING WATER SYSTEM:** these programs save water in a dedicated tank.
A TANK CLEANING CYCLE (at least 45 min.) is automatically run every 30 cycles or after every power off, to assure the best product conditions.

* Power consumption in: Left-on mode: 0.70 W / Off-mode: 0.40 W.

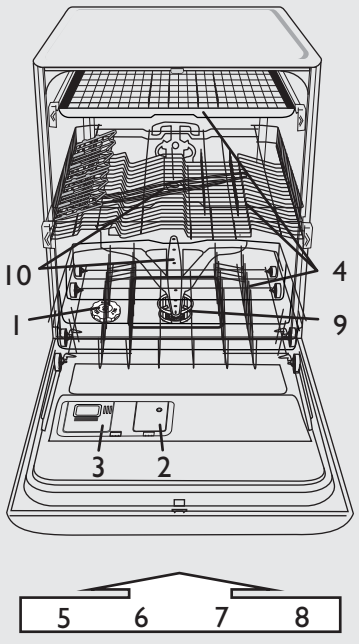

1- salt reservoir
2- rinse aid dispenser
3- detergent dispenser
4- racks system
5,6,7,8- available functions on the panel
9- filters
10- spray arms

Water hardness should be set only before the first wash or if water hardness has been changed

Water hardness level is factory set for medium-hard water (level 4).

Even if you use tablets which include salt functionality, you must still add regeneration salt since such detergents are not effective enough at softening hard water.

At first time use, the salt reservoir has to be filled independently from water hardness level (see description below in step 1 "Daily check").

- Press and hold together **PROGRAM Selection** and **CANCEL/Off** buttons for minimum 3 seconds.
- The current water hardness setting will be visible on the display.
- Press the **PROGRAM Selection** button to increase setting. Value range goes from 1 to 7 (when the level reaches 7, the next press of the start button will set the level back to 1).
- Wait 30 seconds (control panel switches off) or press **Start/Resume** button to save setting.

1. Ask your water supply company what the **water hardness** is...				**2.** ...enter this value on your dishwasher	Suggestions for detergent use	
German degrees °dH	French degrees °fH	English degrees °eH	Water hardness level	Insert value is shown in the display	Gel or Powder (rinse aid and salt)	Tablets
0 - 5	0 - 9	0 - 6.3	Soft	1	go to step 1 (see "Daily check")	
6 - 10	10 - 18	7 - 12.6	Medium	2		
11 - 15	19 - 27	13.3 - 18.9	Average	3		
16 - 21	28 - 37	19.6 - 25.9	Medium-hard	4		if water is HARD extra salt needs to be added (go to step 1, "Daily check")
22 - 28	38 - 50	26.6 - 35	Hard	5		
29 - 35	51 - 63	35.7 - 44.1	Very hard	6		
36 - 50	64 - 90	44.8 - 62.4	Extremely hard	7		

Filling the salt reservoir - Dissolve limescale (not necessary if water hardness level is set to "soft"!)

Daily check

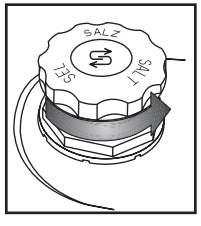

Visual indicator (depending on the model). Unscrew cap.

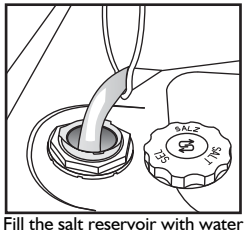

Fill the salt reservoir with water before the first wash only.



Add salt (never add detergent!) min. 0.8 kg/max. 1 kg

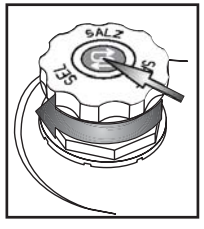

Screw on the cap. Salt residual around the cap need to be removed. Some salt reservoir have a level indicator integrated in the cap (see below how to check).

Once regeneration salt is added, immediately start a wash program (the "Pre-wash" program alone is not sufficient).
Residual saline solution or grains of salt can lead to deep-down corrosion, irreparably damaging the stainless steel components.
The guarantee is not applicable if faults are caused by such circumstances.

The salt level indicator lamp may remain lit at the end of several wash cycles. If the water hardness level falls within category (soft), no salt is required.

(depending on the model)

Salt indicator on the control panel

The indicator lamp lights up when SALT NEEDS TO BE ADDED.

Salt indicator on the salt reservoir cap

green: OK.

clear: NEEDS TO BE ADDED

Adding rinse aid (not necessary when you use tablets). How to adjust the rinse aid dosage regulator

2

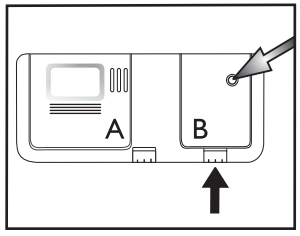

Visual indicator

If required, open the cover B (press the dedicated button).

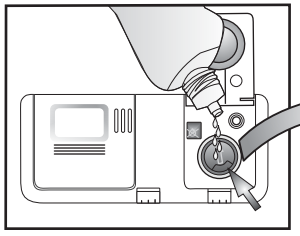

Add **rinse aid** to the max. line ~150 ml

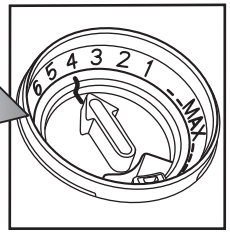

The rinse aid dosage can be adjusted to the detergent used. The lower the setting, the less rinse aid is dispensed (factory setting: position 4). Press the button to open the cover B. Using a coin or similar object, turn the arrow to the desired setting. After adjusting the rinse aid setting, shut the cover again.

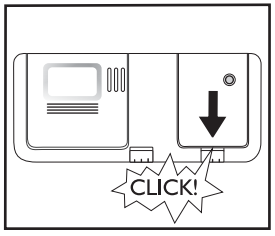

Check the rinse aid indicator to check the level into the dispenser.

(depending on the model)

Rinse aid indicator on the control panel

The indicator lamp lights up when RINSE AID NEEDS TO BE ADDED.

Rinse aid indicator on the dispenser

dark: OK.

clear: NEEDS TO BE ADDED

Only use rinse aids recommended for use in domestic dishwashers. **Immediately** wipe away any rinse aid spilt accidentally. This prevents the formation of excess suds which can cause a fault function of the appliance.

If there are streaks: reduce the dosage by turning the dial to a lower setting (1-3). If crockery is not perfectly dry: increase the dosage by turning the dial to a higher setting (5-6). Plastic dishes have more difficulty drying and a higher rinse aid setting will not improve the situation.

Detergents with rinse aid incorporated may be effective only with longer programs. In the case of shorter programs, detergent residue may be a problem (if necessary, use powder detergent). Detergents with rinse aid incorporated tend to form excess suds.

Adding detergent - Use only detergent specifically for dishwashers in accordance with the supplier's recommendations

3

Open the cover A (press the dedicated button).

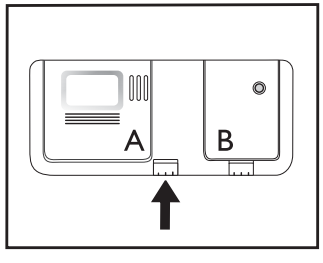

Insert detergent: **Tablet** / **powder** / **liquid** into the big chamber. Please look for the recommendation of the detergent manufacturer on the packaging of the detergent product.

Only fill the detergent dispenser prior to starting a wash program.

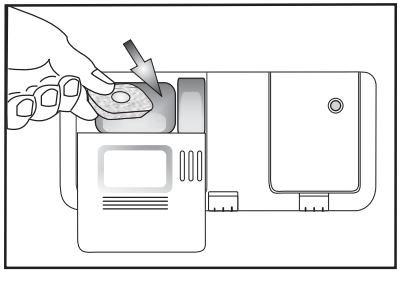

Use only one tablet per one cycle, only placed in detergent dispenser.

All types of tablets can be used, but for 2 in 1 type adding of salt is mandatory.

Some types of tablets may not dissolve completely during the short cycles (Rapid, Fragile, Handwash); placing the tablet on the tub bottom can help dissolving and washing.

Shut the cover by pressing dedicated ribs.

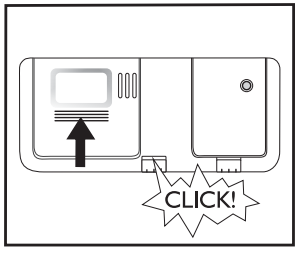

4

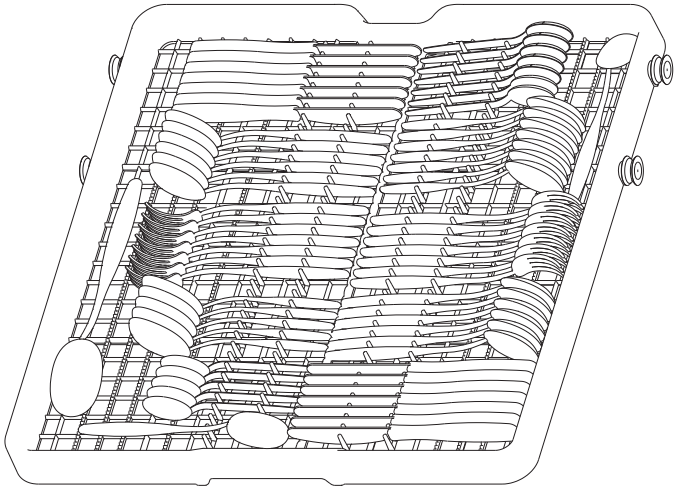

How to remove cutlery rack (if available) - It could be useful to remove cutlery rack to load stem glasses in upper rack.

- Open the two retainers (**D**) to take off the rack. <u>When the cutlery rack is in place the retainers must always be closed.</u>

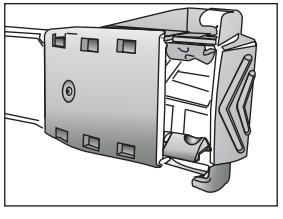

D - CLOSED

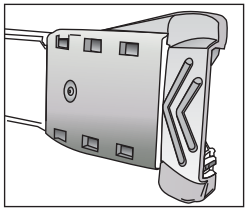

D - OPEN

Load cutlery with the handle into the pins.

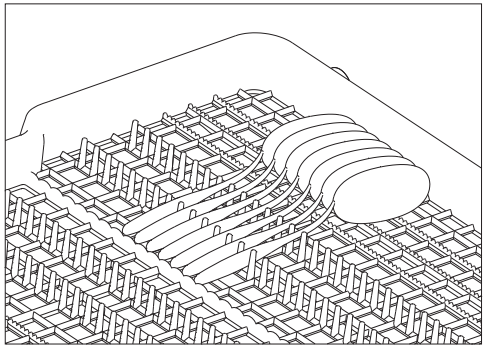

Knives or cutlery with bulky handle can be loaded with the head into the pins.

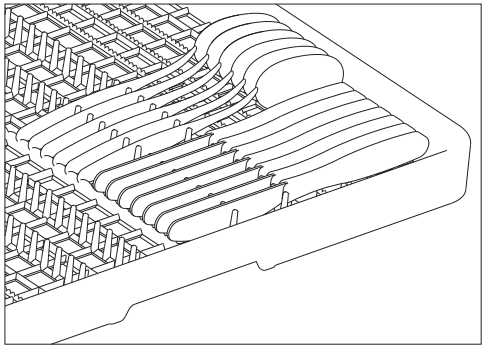

4

In the upper rack you can load glasses, cups, bowls and, in the right side of the rack, you can load the dessert dishes.
Foldable flaps (A) when open help to load stemmed glasses, long tools or coffee cups.
Plate holders (B) can be folded down to load bowls.

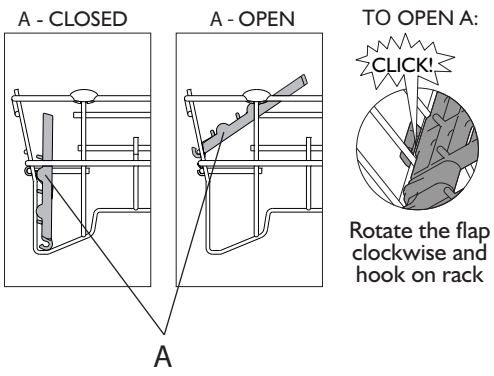

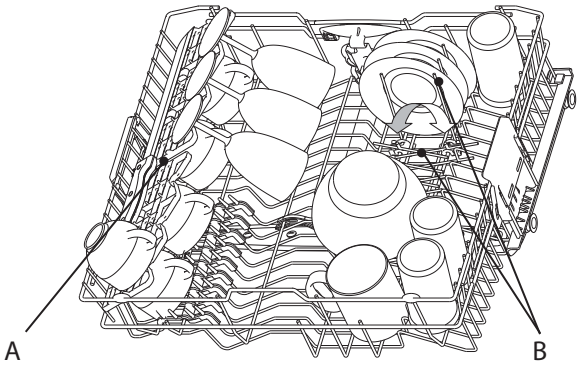

You can load dishes up to Ø 20 cm in the upper rack ONLY if the rack is in lower position (see below how to adjust the upper rack).

How to adjust upper rack height (if available) - it could be useful to lift up upper rack to have more space in lower rack bring it down to load long stem glasses.

- Grasp and take out the two lateral handles (**C**) (they must be on the same level) and lift up or take down the upper rack.

How to remove upper rack (if available) - It could be useful to remove upper rack to load bulky items in lower rack.

- Open the two retainers (**D**) to take off the rack. When the upper rack is in place the retainers must always be closed.

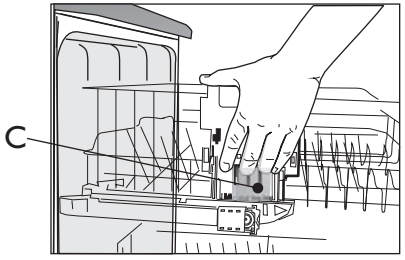

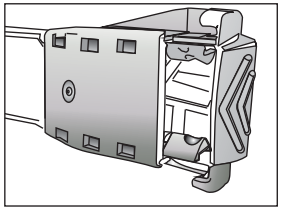

D - CLOSED

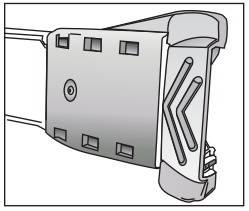

D - OPEN

4

In the lower rack plates and pots can be loaded. **Vertical plate holders (E)** can be folded down to create more space to load pots.

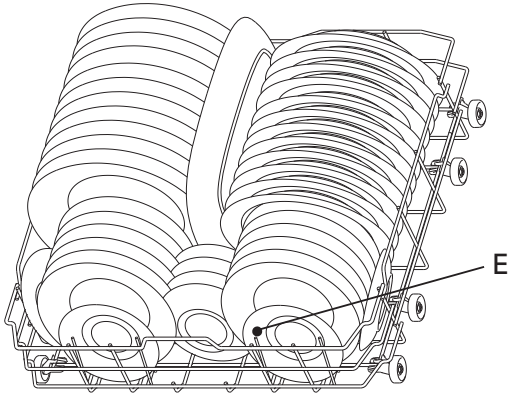

When the "Half load/Multizone" option is selected the **cutlery basket - F** (provided in some models) can be placed in the lower rack.

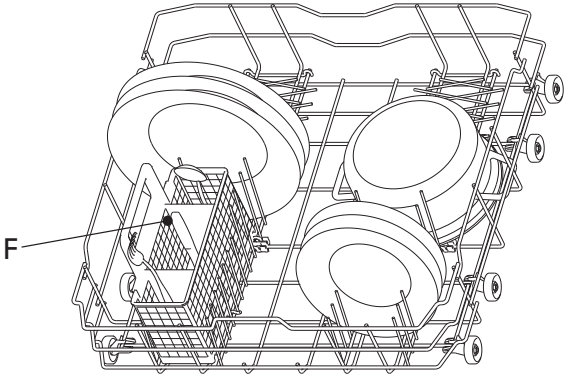

How to use Power Clean

Power Clean uses the special water jets in the rear of cavity to wash more intensively the high dirty items.

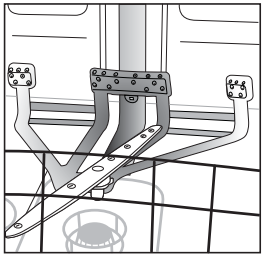

1. Adjust the Power Clean area (**G**) folding down the rear plate holders to load pots.

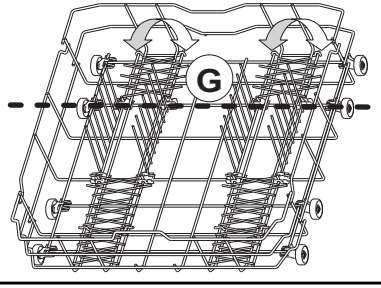

2. Load pots and casseroles inclined vertically in Power Clean area. **Pots have to be inclined towards the power water jets.**

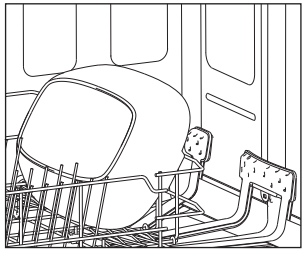

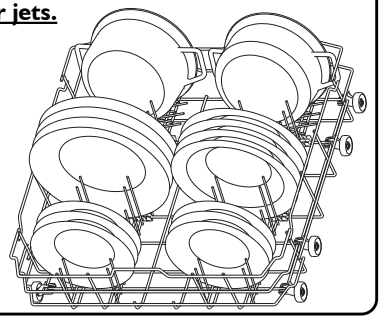

⚠ Arrange crockery so that water does not collect in cavities, ensuring that the spray arms turn freely. Only use dishwasher-proof crockery and dishes. Do not use the dishwasher for washing wooden items, aluminium, tin, silver cutlery or decorated crockery (unglazed). In the baskets, dishes (e.g. plates, bowls, pots) must be placed in a correct way to let water flow down!

5

Switching on the appliance. Press any button (except CANCEL/Off button) to switch on the control panel and start programming.

Select program

6 **Overview of programs**
The max. possible number of programs is illustrated in the chapter “Chart”. The corresponding programs for your appliance can be found on the panel (page 1).

Choose program according to the attached Table of programs (page 2).
Duration of the program depends on the external conditions in the apartment, temperature and pressure etc.

Wash cycle

7 The dishwasher door must be closed and the water tap open.

To pause the program (e.g. if you want to insert an item):
- Open the door with caution (the program pauses) and insert the item/s, **(beware of HOT steam!)**.
- Press the **START** button and close the door within 3 seconds (the program resumes the cycle from where it was interrupted).

To Cancel the program on running:
- Open the door, press the **CANCEL/ Off** button and close the door.
- (Water drains for up to 1 minute then the appliance switches off).

To change the program in progress:
- Open the door, press the **CANCEL/Off** button to cancel the running program and close the door.
- (Water drains for up to 1 minute then the appliance switches off).
- Open the door and press any button except **CANCEL/Off** button to switch on the appliance.
- Select a new program.
- Press the **START** button and close the door within 3 seconds

Switching off the appliance. Everything OK...

8 After the program is completed appliance turns into **Standby** mode automatically. All indicator lamps switch off.
Exercise caution when opening the door: beware of hot steam.
Unload the appliance starting from the lower rack in order to avoid any residual drips of water falling onto crockery below.

Maintenance and care

Maintenance and care

9 **Filters**
Check and clean if necessary

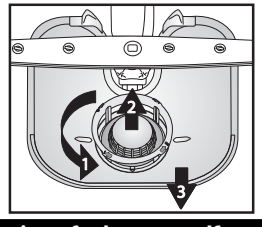

Unscrew microfilter (1), remove it (2) and remove fine sieve (3)...

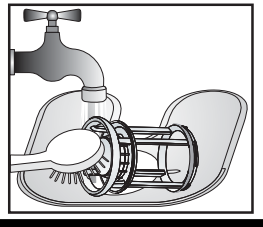

Rinse under running water...

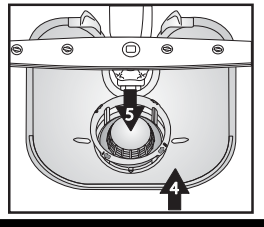

Insert

Screw on microfilter NOTE MARK!

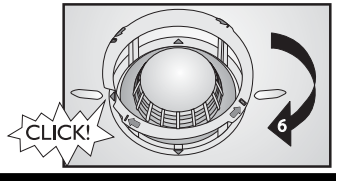

Rectifying minor faults yourself...

10 **Spray arms**
Remove blockages/ deposits.

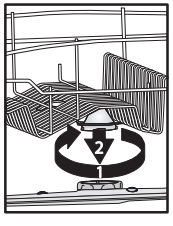

Unscrew and remove upper arm...

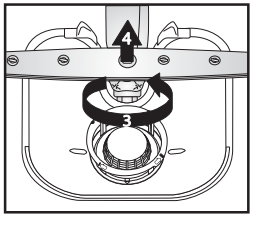

Unscrew and remove lower arm...

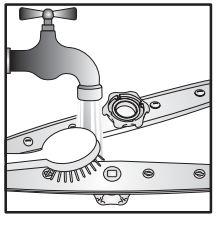

Clean spray nozzles under running water (use toothpicks if necessary)...

Insert and screw on upper and lower arms tightly.

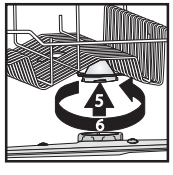

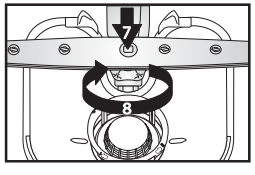

If a fault occurs, before contacting the After-sales Service, make the following checks to try and remedy the problem. Most faults can be remedied by taking the following courses of action, quickly restoring normal appliance operation.

How the faults are shown on the display: **Function number "F"x** - blinking **Error number "E"y** - blinking 0.5 sec. pause

The appliance...	Possible causes...	Solutions...
...is not working/will not start	- The appliance must be switched on.	- Check the household circuit fuse if there is no power supply.
	- The dishwasher door doesn't close.	- Check if the dishwasher's door is closed.
	- "Delayed start" option is ON.	- Check whether the "Delayed start" option (if available) has been selected. If it has, the appliance will only start once the set time has elapsed. If necessary, RESET the appliance by pressing CANCEL or start the cycle immediately by pressing START.
...shows "F6 E2"	- Water tap closed.	- The water tap must be open.
	- Kinked water inlet hose or clogged inlet filters.	- The water inlet hose must not be kinked and the relative inlet filter in the water tap connector must not be clogged.
...shows "F6 E7" or "F6 E1"	- Water pressure too low.	- The water tap must be fully open during water inlet (minimum capacity: 0.5 litres per minute).
	- Kinked water inlet hose or clogged inlet filters.	- The water inlet hose must not be kinked and the relative inlet filter in the water tap connector must not be dirty.
...shows "F6 E3"/wash program ended too early (dishes are dirty and wet)	- Dirty or clogged filters.	- The filters must not be dirty or clogged.
	- Too little water in the dishwasher's water system.	- Concave items (e.g. bowls, cups) must be arranged facing downwards in the rack.
	- Drain hose incorrectly fitted.	- The drain hose must be fitted correctly (for high mounted appliances, leave min. 200-400 mm from the lower edge of the appliance) - see Assembly instructions.
	- High level of foam inside.	- Repeat without detergent or wait until foam disappears.
...shows "F8 E1"	- Dirty filters.	- Clean the filters.
	- Kinked drain hose.	- The drain hose must not be kinked.
	- Syphon hose connection closed.	- The closure disk of the syphon hose connection must be removed.

After taking the above course of action, the fault message must be reset. In the majority of cases the fault is thus eliminated.

RESET:
- ➔ Press the **CANCEL/Off** button.
- ➔ Close the door.
- ➔ Water drains automatically for up to 1 minute.
- ➔ The appliance is now ready to be restarted.

Crockery and cutlery...	Possible causes...	Solutions...
...are not perfectly clean/have food residues	- Too little space between dishes (incorrect arrangement of the concave items in the rack).	- Arrange crockery so that items do not touch each other. Concave items (e.g. bowls, cups) must be arranged facing downwards in the rack.
	- Too little detergent; detergent too old or incorrectly stored.	- If necessary, use more detergent, observing the manufacturer's indications as regards dosage. Always store detergent in a dry place and do not store it for excessively long periods of time.
	- Temperature not high enough for heavily soiled crockery.	- For heavily soiled crockery, select a wash program with a higher temperature (see Table of programs - chapter "Chart" - page 2).
	- Loading of the dishwasher using lower and upper rack at the same time with "Half load/Multizone" option.	- If you select the "Half load/Multizone" option (if available), remember to load **only** the upper rack or **only** the lower rack to increase washing power and thus obtain optimum wash results.
	- Frequent use of Eco 50°C.	- In the event of frequent use of the Eco 50°C program (if available), from time to time select the Intensive 65°C program (if available).
	- Clogged spray arms, dirty filters or not fitted correctly.	- The spray arms must not be clogged, the filters must not be dirty and must be fitted correctly (see page 8, "Maintenance and care").
	- Spray arms stuck impeded by crockery or cutlery.	- The spray arms must be able to turn freely and must not be impeded by crockery or cutlery.
...salt indicator lit	- Use tablets for soft water.	- Set "Tablet" option; if this option is not available, it is normal for the salt indicator to light up.
...have deposits: regeneration salt residue	- Water too hard.	- In areas with very hard water, more regeneration salt needs to be added (see page 3, "How to set water hardness").
	- Salt reservoir cap open.	- Close the salt reservoir cap properly.
	- Not enough rinse aid.	- If you use a combined action detergent, try adding more rinse aid.
...are not dry	- Plastic containers dry badly.	- Synthetic materials do not dry well; if wet at end of cycle, wipe dry.
	- Clean dishes left in dishwasher for a long time after end of cycle (e.g. when using "Delayed start" option).	- In this situation, the presence of drops of water on dishes and on the sides of the dishwasher is normal. Try releasing the door 5 minutes before removing the dishes.
	- Incorrect arrangement of the concave items in the rack.	- Arrange crockery so that water does not collect in cavities.
	- Incorrect dosage the rinse aid.	- Increase the dosage of rinse aid (see page 4, "Adding rinse aid").
	- Rapid program selected.	- The Rapid program 40°C / 45°C is intended for quickly washing lightly soiled dishes. If used for a full load of medium/heavy soiled dishes, the dishes may not dry completely. If so, select a standard-length program. For best results, open the door after the end of the program and wait 15 minutes before unloading the dishwasher.

Crockery and cutlery...	Possible causes...	Solutions...
...have discoloured plastic parts	- Tomato/Carrot juice.	- Tomato sauce, for example, can lead to discolouring of plastic parts. Powder detergent is recommended as it allows slightly higher doses to be used for improved whitening. Programs with higher wash temperatures should be used.
...opaque glasses, etc.	- Dishes unsuitable for washing in dishwashers (porcelain),	- Only use dishwasher-proof crockery and dishes.
...removable deposits on glasses	- Usage of incorrect programs for glasses.	- Dishes should be put together, to avoid touching each other. Do not put glassware together in baskets. Use suitable program for glass.
...glasses not sparkling	- Not conform of glasses to washing in dishwashers (porcelain).	- Some kinds of glass cannot be washed in the dishwasher.

...permanent deposits on glasses	- Rainbow effect.	- This phenomenon is irreversible. We recommend in future:
		  - Change the control of system of dosage of softener.
		  - Be careful – follow recommended detergent dosage.
		  - For combined action tablets see detergent producer's recommendations.

...tea cups darken and dirt does not disappear after washing in dishwasher	- Not known.	- This phenomenon is inevitable. Theine alters colours permanently.
...rust marks	- Pre-wash program not used.	- Salty or acidic food residues can cause rust marks even on stainless steel cutlery. To avoid this, always use the Pre-wash program if the dishes are to be washed later.
...other marks	- Rinse aid dosage too low.	- In the presence of marks, increase the rinse aid dosage (see page 4, "Adding rinse aid"). - If you use a combined action detergent, try adding more rinse aid.
...streaks	- Rinse aid dosage too high.	- In the presence of streaks, reduce the rinse aid dosage (see page 4, "Adding rinse aid"). - If you use a combined action detergent which includes rinse aid, do not add any additional rinse aid.
...suds	- Unsuitable dosage of detergent/rinse aid.	- Only use the amount of detergent/rinse aid required, since excessive amounts can lead to excess suds.

If, after carrying out the above checks, the fault persists, disconnect the mains plug and turn off the water tap. Contact the After-sales Service (see warranty). Before contacting our After-Sales Service, take note of the following:

- the description of the fault,
- the appliance type and model,
- the service code (the number indicated on the adhesive rating plate) inside the door on the right-hand side:



1. Packing
The packaging materials are 100% recyclable and marked with the recycling symbol.

2. Removing the packaging and inspecting the contents
After unpacking, make sure that the dishwasher is undamaged and that the door closes correctly. If in doubt, contact a qualified technician or your local retailer.

3. Before using the dishwasher for the first time
- The appliance is designed to operate at ambient temperatures of between 5°C and 45°C.
- This dishwasher has been tested by the manufacturer to ensure it functions correctly. Such testing may leave slight drips/water marks which will disappear with the first wash.

4. Energy and water savings
- Do not rinse crockery under running water.
- Always fully load the dishwasher before running it or select the "Half load/ Multizone" option (if available).
- If ecological energy sources are available such as solar panel heating, heat pumps or centralised heating systems, the appliance may be connected to the hot water mains up to a maximum temperature of 60°C. Make sure the water inlet hose is of the correct type ("70°C Max" or "90°C Max").

5. Child safety
- Keep the packaging materials out of the reach of children.
- Children must not be allowed to play with the dishwasher.
- Store the detergent, rinse aid and salt out of the reach of children.

6. Safety warnings
- The appliance is not intended for use by children or physically or mentally impaired persons, unless adequately supervised by a responsible adult capable of guaranteeing safe use of the appliance.
- Do not operate the appliance in the open air.
- Do not store flammable materials in close proximity to the dishwasher.
- The water in the dishwasher is not potable.
- Do not use solvents inside the dishwasher: **risk of explosion!**
- Be careful when the door is open: **risk of tripping!**
- The open dishwasher door can only support the weight of the loaded rack when pulled out. Do not rest objects on the open door or sit or stand on it.
- Sharp items that might cause injury (e.g. knives), must be placed in the cutlery basket with the sharp end facing downwards. Long-handled utensils must be arranged horizontally in the upper rack, with the sharp end facing away from the front of the appliance.
- Before cleaning or carrying out maintenance, disconnect the mains plug and turn off the water tap; also in the event of any malfunction.
- Repairs and technical modifications must be carried out exclusively by a qualified technician.

7. Resistance to frost
If the appliance is placed in surroundings exposed to the risk of frost, it must be drained completely. Turn off the water tap, remove the inlet and outlet hoses, and let all the water drain away. Make sure there is at least 1 kg of dissolved regeneration salt in the salt container, to protect the appliance from temperatures of up to -20°C. When the program resumes, an error message may be indicated (see page 9).
"F6 E2" - the appliance must remain at an ambient temperature of min. 5°C for at least 24 hours.
After eliminating these faults, RESET the appliance (see chapter "What to do if...").

8. Disposal
- The appliance is manufactured using recyclable materials. If you decide to scrap the dishwasher, it must be disposed of in compliance with local waste disposal regulations. Make it unusable by cutting off the power cord. To prevent situations of potential danger to children (e.g. danger of suffocation), break the lock of the door so that it can no longer be closed.
- This appliance is marked according to the European directive 2002/96/CE on Waste Electrical and Electronic Equipment (WEEE). By ensuring that this appliance is scrapped suitably, you can help prevent potentially damaging consequences for the environment and health. Unsuitable disposal of an appliance of this type as household waste could have detrimental effects on the environment. The symbol on the appliance, or on documentation enclosed with the appliance, indicates that this product must not be treated as household waste, but must be delivered to the nearest collection centre for the recycling of electrical and electronic appliances. Disposal must be carried out in accordance with local environmental regulations for waste disposal. For further information on the treatment, recovery and recycling of this appliance, contact your competent local authority, the collection service for household waste or the shop where you purchased the appliance.

EC Declaration of conformity
This appliance has been designed, constructed and distributed in compliance with the safety requirements of EC Directives: CE 2006/95/CE, 89/336/CE, 93/68/CE and 2002/95/CE (RoHS Directive).

Loading Capacity: 13 place settings.

The guarantee is not applicable if faults are caused by incorrect use of the appliance.