GMA 6422/IX

12NC: 859991031290

GTIN (EAN) code: 8003437828263

SENSING THE DIFFERENCE



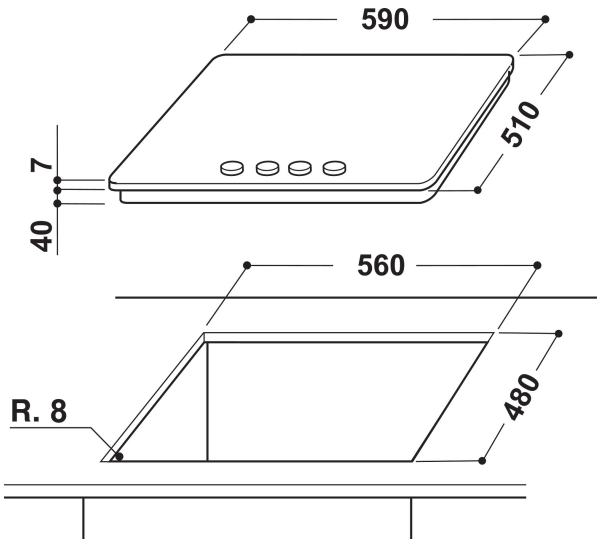

Whirlpool gas hob: 4 gas burners - GMA 6422/IX

Standard Whirlpool technologies and features for you to enjoy.

Power Burner 3500W
3.5kW burner. Enjoy tastier results, faster. Seal your meat to perfection, boil water faster or enjoy a perfect stir-fry dishes with the outstanding Power Burner 3.500W.

Power Burner 4gas (PB)
Power cooking. This Whirlpool Hob features 4 Power burners to provide extra heat and speed up boiling, frying and steaming, while ensuring high energy efficiency.

Speed to Boil
Enjoy faster boiling. Our innovative technology, by effectively harnessing the energy of the flames, ensures more heat is delivered directly to your pots and pans allowing you to enjoy ideal cooking results, sooner.

Stainless Steel
For the stylish modern look in your kitchen.

Front Controls
Complete control over your cooking. Easily accessible and genuinely intuitive, the controls are conveniently positioned on the front panel of your hob, providing a frictionless cooking experience.

- Cast Iron Pan Supports
- Electromagnetic safety device for each burner
- Silver painted knobs
- 2 Fusion Aphrodite 2 Cast Iron grids
- Front controls
- 60 cm hob
- Mechanical control
- Ignition type: knob
- 4 Burners
- 4 burners: 1 Power burner 3500 W burner, 1 Semirapid 1650 W burner, 1 Semirapid 1650 W burner, and 1 Auxiliary 1000 W burner.
- Supply cord included
- Dimensions HxWxD: 41x590x510 mm
- Niche dimensions HxWxD: 38x560x480 mm
- Voltage: 230 V
- Gas Connection Rating: 8000 W

GMA 6422/IX

12NC: 859991031290

GTIN (EAN) code: 8003437828263

Whirlpool
SENSING THE DIFFERENCE

MAIN FEATURES

Product group	Hob
Construction type	Built-in
Type of control	Mechanical
Type of control settings	-
Number of gas burners	4
Number of electric cooking zones	0
Number of electric plates	0
Number of radiant plates	0
Number of halogen plates	0
Number of induction plates	0
Number of electric warming zones	0
Location of control panel	Front
Basic surface material	Inox
Main colour of product	Inox
Electrical connection rating (W)	0
Gas connection rating (W)	8000
Current (A)	0,2
Voltage (V)	230
Frequency (Hz)	50
Length of Electrical Supply Cord (cm)	85
Plug type	No
Gas connection	Cilindric
Width of the product	590
Height of the product	41
Depth of the product	510
Minimum niche height	38
Minimum niche width	560
Niche depth	480
Net weight (kg)	10.5
Automatic programmes	No

TECHNICAL FEATURES

Power on indicator	No
Number of indicators	0
Type of regulation	Temperature regulated
Type of lid	Without
Residual heat indicator	Without
Main on/off switch	No
Safety device	-
Timer	No

PERFORMANCES

Energy input	Gas