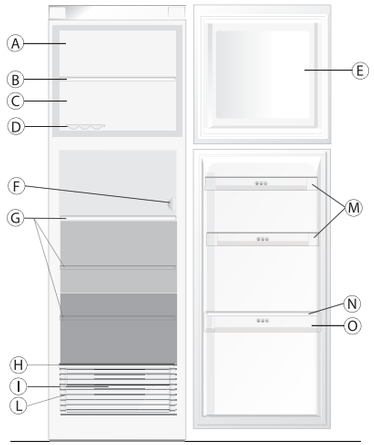

Freezer Compartment
A. Area for freezing
B. Grid
C. Area for storing frozen and deep-frozen foods
D. Ice cube tray (if provided)
E. Freezer compartment inner door

Least cold zone
Intermediate temperature zone
Coldest zone
Fruit and vegetable crisper

Refrigerator Compartment
F. Thermostat control knob/light
G. Shelves
H. Crisper drawer lid
I. Crisper drawer
L. Rating plate (at the side of crisper drawer)
M. Door trays
N. Bottle holder (if provided)
O. Bottle bin

Note: All shelves, door trays and racks are removable.

The ideal temperatures for the storage of foodstuffs are pre-set in the factory

Read the user handbook carefully before using the appliance.
Specifications, technical data and images may vary from model to model.

Freezing fresh food
Place fresh food to be frozen on the grid in the freezer compartment, avoiding direct contact with food that is already frozen. To freeze the amount of food indicated on the data plate, place the freezer compartment grid in the upper position, position the fresh food on it, then turn the thermostat knob half a setting towards lower values (e.g. from 4 to 3.5).
After 24 hours freezing will be complete: set the thermostat knob back to the position it was in before the freezing procedure.

Thermostat control reference

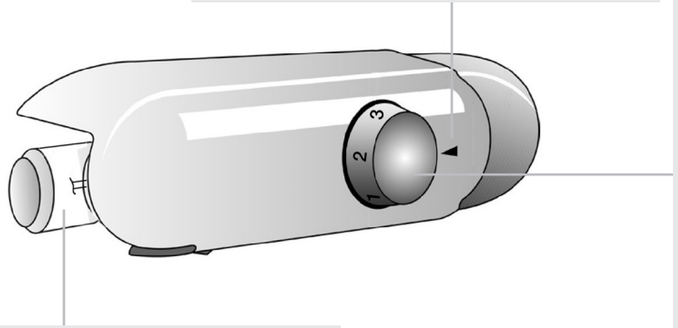

Light bulb/LED bulb

Freezer and refrigerator compartment temperature
This Fridge/Freezer is switched on by means of the thermostat located inside the refrigerator compartment.

The temperature of both compartments is adjusted by turning the thermostat knob.

Thermostat set to **1/2 : minimum refrigeration**
Thermostat set to **3-5 : medium refrigeration**
Thermostat set to **6/7 : maximum refrigeration**
Thermostat set to **• : no refrigeration, no light**

Setting the thermostat knob to • turns the whole appliance off.

What to do if...	Possible causes	Cure
The appliance doesn't work.	There may be an appliance power supply problem.	Make sure: • there is not a power failure • the plug is properly inserted in the power socket and the double-pole switch (if present) is in the correct position (on) • the household electrical system protection devices function • the power cable is not broken. • the thermostat knob is not turned to " • "
The inside light doesn't work.	The lamp may need replacing.	Disconnect the appliance from the power supply, check the light bulb and, if necessary, replace it with a new one (see the section "Light bulb or LED replacement"): - traditional light bulb (25 W max.)  **Light bulb** Or - LED bulb (with the same characteristics), only available from the After-Sales Service 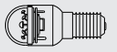 **LED bulb**
The temperature inside the compartments isn't low enough.	There could be various causes (see the column "Cure").	Make sure: • the doors are properly closed • the appliance is not installed near a heat source • the temperature set is appropriate • the circulation of air through the ventilation grilles at the bottom of the appliance is not obstructed.
Water on the bottom of the refrigerator compartment.	The defrost water drain is obstructed.	Clean the defrost water drain hole (see the section "Appliance maintenance and cleaning")
The front edge of the refrigerator is hot at the door seal.	This is not a problem. It is a design feature to prevent condensation from forming.	No cure is necessary.

Note: Gurgling and hissing noises, caused by the refrigeration system, are normal.

Printed in Italy 12/11 - Whirlpool® Registered trademark/TM Trademark of Whirlpool group of companies - © Copyright Whirlpool Europe s.r.l. 2011. All rights reserved - http://www.whirlpool.eu