Whirlpool

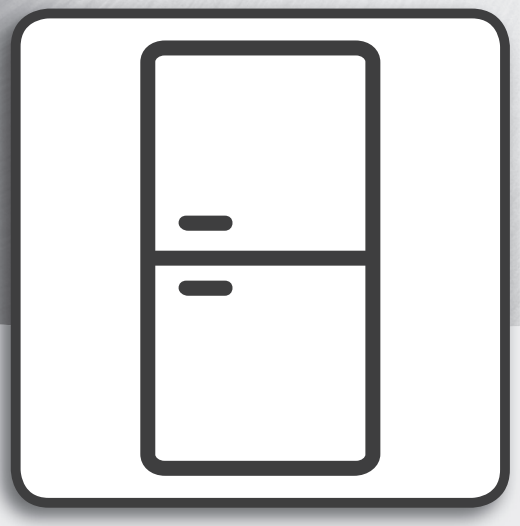

User Manual

www.whirlpool.eu/register

USER MANUAL

THANK YOU FOR BUYING A WHIRLPOOL PRODUCT.
In order to receive a more complete assistance,
please register your appliance on **www.whirlpool.eu/register**

INDEX

HEALTH & SAFETY GUIDE 3
Safety instructions 3

USE & CARE GUIDE 5
Product Description 5
Control panel 5
Refrigerator light 6
Shelves 6
Door 6
How to use the appliance 7
First time use 7
Refrigerator compartment and food storage 7
How to store fresh food and beverage 7
Freezer compartment and food storage 8
Storage times for home frozen foods 8
How to defrost the freezer compartment 8
Functional sounds 9
Recommendation in case of no use of the appliance 9
Cleaning and maintenance 9
Troubleshooting 10
After-sales service 11

INSTALLATION GUIDE 12

SAFETY INSTRUCTIONS

IMPORTANT TO BE READ AND OBSERVED

Before using the appliance, read these safety instructions. Keep them nearby for future reference. These instructions and the appliance itself provide important safety warnings, to be observed at all times. The manufacturer declines any liability for failure to observe these safety instructions, for inappropriate use of the appliance or incorrect setting of controls.

⚠ Very young children (0-3 years) should be kept away from the appliance. Young children (3-8 years) should be kept away from the appliance unless continuously supervised. Children from 8 years old and above and persons with reduced physical, sensory or mental capabilities or lack of experience and knowledge can use this appliance only if they are supervised or have been given instructions on safe use and understand the hazards involved. Children must not play with the appliance. Cleaning and user maintenance must not be carried out by children without supervision.

PERMITTED USE

⚠ CAUTION: The appliance is not intended to be operated by means of an external switching device, such as a timer, or separate remote controlled system.

⚠ This appliance is intended to be used in household and similar applications such as: staff kitchen areas in shops, offices and other working environments; farm houses; by clients in hotels, motels, bed & breakfast and other residential environments.

⚠ This appliance is not for professional use. Do not use the appliance outdoors.

⚠ The bulb used inside the appliance is specifically designed for domestic appliances and is not suitable for general room lighting within the home (EC Regulation 244/2009).

⚠ The appliance is designed for operation in places where the ambient temperature comes within the following ranges, according to the climatic class given on the rating plate. The appliance may not work properly if it is left for a long time at a temperature outside the specified range.

Climatic Class Amb. T. (°C)

SN: From 10 to 32 °C; N: From 16 to 32 °C

ST: From 16 to 38 °C; T: From 16 to 43 °C

⚠ This appliance does not contain CFCs. The refrigerant circuit contains R600a (HC). Appliances with Isobutane (R600a): isobutane is a natural gas without environmental impact, but is flammable. Therefore, make sure the refrigerant circuit pipes are not damaged, especially when emptying the refrigerant circuit.

⚠ WARNING: Do not damage the appliance refrigerant circuit pipes.

⚠ WARNING: Keep ventilation openings, in the appliance enclosure or in the built-in structure, clear of obstruction.

⚠ WARNING: Do not use mechanical, electric or chemical means other than those recommended by the Manufacturer to speed up the defrost process.

⚠ WARNING: Do not use or place electrical devices inside the appliance compartments if they are not of the type expressly authorised by the Manufacturer.

⚠ WARNING: Ice makers and/or water dispensers not directly connected to the water supply must be filled with potable water only.

⚠ WARNING: Automatic ice-makers and/or water dispensers must be connected to a water supply that delivers potable water only, with mains water pressure between 0.17 and 0.81 MPa (1.7 and 8.1 bar).

⚠ Do not store explosive substances such as aerosol cans with a flammable propellant in this appliance.

⚠ Do not swallow the contents (non-toxic) of the ice packs (provided with some models). Do not eat ice cubes or ice lollies immediately after taking them out of the freezer since they may cause cold burns.

⚠ For products designed to use an air filter inside an accessible fan cover, the filter must always be in position when the refrigerator is in function.

⚠ Do not store glass containers with liquids in the freezer compartment since they may break.

Do not obstruct the fan (if included) with food items.

After placing the food check that the door of the compartments closes properly, especially the freezer door.

⚠ Damaged gaskets must be replaced as soon as possible.

⚠ Use the refrigerator compartment only for storing fresh food and the freezer compartment only for storing frozen food, freezing fresh food and making ice cubes.

⚠ Avoid storing unwrapped food in direct contact with internal surfaces of the refrigerator or freezer compartments.

Appliances could have special compartments (Fresh Food Compartment, Zero Degree Box, etc.). Unless specified in the specific booklet of product, they can be removed, maintaining equivalent performances.

⚠ C-Pentane is used as blowing agent in the insulation foam and it is a flammable gas.

INSTALLATION

⚠ The appliance must be handled and installed by two or more persons - risk of injury. Use protective gloves to unpack and install - risk of cuts.

⚠ Installation, including water supply (if any) and

electrical connections, and repairs must be carried out by a qualified technician. Do not repair or replace any part of the appliance unless specifically stated in the user manual. Keep children away from the installation site. After unpacking the appliance, make sure that it has not been damaged during transport. In the event of problems, contact the dealer or your nearest After-sales Service. Once installed, packaging waste (plastic, styrofoam parts etc.) must be stored out of reach of children - risk of suffocation. The appliance must be disconnected from the power supply before any installation operation - risk of electric shock. During installation, make sure the appliance does not damage the power cable - risk of fire or electric shock. Only activate the appliance when the installation has been completed.

⚠ Be careful not to damage the floors (e.g. parquet) when moving the appliance. Install the appliance on a floor or support strong enough to take its weight and in a place suitable for its size and use. Make sure the appliance is not near a heat source and that the four feet are stable and resting on the floor, adjusting them as required, and check that the appliance is perfectly level using a spirit level. Wait at least two hours before switching the appliance on, to ensure that the refrigerant circuit is fully efficient.

⚠ WARNING: To avoid a hazard due to instability, positioning or fixing of the appliance must be done in accordance with the manufacturer instructions. It is forbidden to place the refrigerator in such way that the metal hose of gas stove, metal gas or water pipes, or electrical wires are in contact with the refrigerator back wall (condenser coil).

All dimensions and spacing needed for installation of the appliance are in the Installation instruction booklet.

ELECTRICAL WARNINGS

⚠ It must be possible to disconnect the appliance from the power supply by unplugging it if plug is accessible, or by a multi-pole switch installed upstream of the socket in accordance with the wiring rules and the appliance must be earthed in conformity with national electrical safety standards.

⚠ Do not use extension leads, multiple sockets or adapters. The electrical components must not be accessible to the user after installation. Do not use the appliance when you are wet or barefoot. Do not operate this appliance if it has a damaged power cable or plug, if it is not working properly, or if it has been damaged or dropped.

⚠ If the supply cord is damaged, it must be replaced with an identical one by the manufacturer, its service agent or similarly qualified persons in order to avoid a hazard - risk of electric shock.

CLEANING AND MAINTENANCE

⚠ WARNING: Ensure that the appliance is switched off and disconnected from the power supply before performing any maintenance operation; never use steam cleaning equipment - risk of electric shock.

⚠ Do not use abrasive or harsh cleaners such as window sprays, scouring cleansers, flammable fluids, cleaning waxes, concentrated detergents, bleaches or cleansers containing petroleum products on plastic parts, interior and door liners or gaskets. Do not use paper towels, scouring pads, or other harsh cleaning tools.

DISPOSAL OF PACKAGING MATERIALS

The packaging material is 100% recyclable and is marked with the recycle symbol ♻.

The various parts of the packaging must therefore be disposed of responsibly and in full compliance with local authority regulations governing waste disposal.

DISPOSAL OF HOUSEHOLD APPLIANCES

This appliance is manufactured with recyclable or reusable materials. Dispose of it in accordance with local waste disposal regulations. For further information on the treatment, recovery and recycling of household electrical appliances, contact your local authority, the collection service for household waste or the store where you purchased the appliance. This appliance is marked in compliance with European Directive 2012/19/EU, Waste Electrical and Electronic Equipment (WEEE). By ensuring this product is disposed of correctly, you will help prevent negative consequences for the environment and human health.

The symbol  on the product or on the accompanying documentation indicates that it should not be treated as domestic waste but must be taken to an appropriate collection center for the recycling of electrical and electronic equipment.

ENERGY SAVING TIPS

To guarantee adequate ventilation follow installation instructions. Insufficient ventilation at the back of the product increases energy consumption and decreases cooling efficiency.

Frequent door opening might cause an increase in Energy Consumption. The internal temperature of the appliance and the Energy Consumption may be affected also by the ambient temperature, as well as location of the appliance. Temperature setting should take into consideration these factors.

Reduce door opening to a minimum.

When thawing frozen food, place in the refrigerator. The low temperature of the frozen products cools the food in the refrigerator. Allow warm food and drinks to cool down before placing in the appliance.

Positioning of the shelves in the refrigerator has no impact on the efficient usage of energy. Food should be placed on the shelves in such way to ensure proper air circulation (food should not touch each other and distance between food and rear wall should be kept).

You can increase storage capacity of frozen food by removing baskets and, if present, Stop Frost shelf.

Do not worry about noises coming from the compressor which are described as normal noises in this product's Quick Guide.

PRODUCT DESCRIPTION

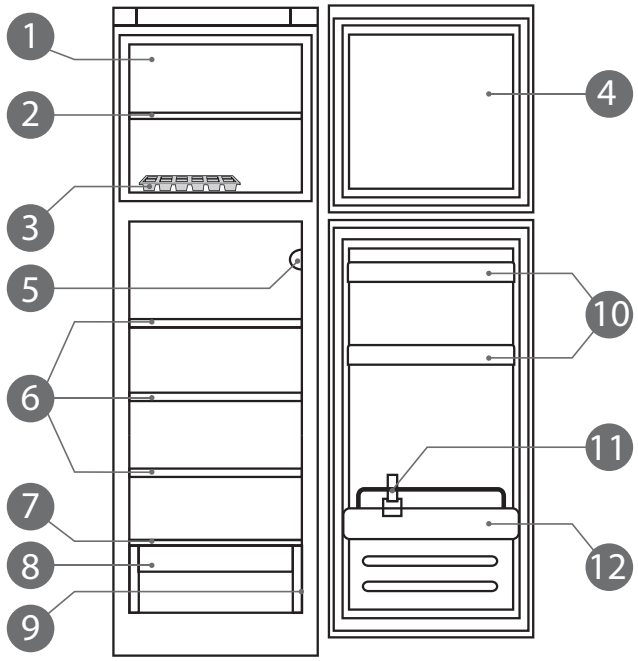

Freezer Compartment

1. Area for freezing food and for storing frozen and deep-frozen foods
2. Grid
3. Ice cube tray*
4. Freezer compartment inner door

Refrigerator Compartment

5. Thermostat control knob/light
6. Shelves
7. Crisper drawer lid
8. Crisper drawer
9. Rating plate (at the side of crisper drawer)
10. Door trays
11. Bottle holder*
12. Bottle bin

CONTROL PANEL

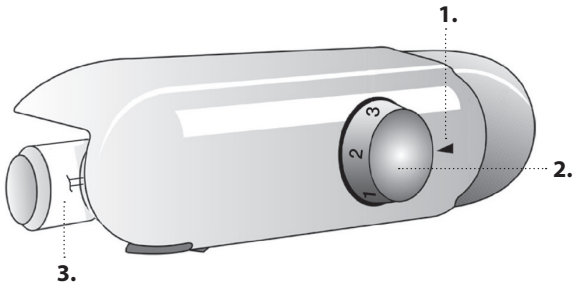

1. Thermostat control reference
2. Freezer and refrigerator compartment temperature
3. LED bulb

FREEZING FRESH FOOD

Place fresh food to be frozen on the grid in the freezer compartment, avoiding direct contact with food that is already frozen.
The quantity of fresh food that can be frozen in 24 hours is written on the rating plate.
To freeze fresh food, place the freezer compartment grid in the upper position.

FREEZER AND REFRIGERATOR COMPARTMENT TEMPERATURE

This Fridge/Freezer is switched on by means of the thermostat located inside the refrigerator compartment.

The temperature of both compartments is adjusted by turning the thermostat knob.

Thermostat set to **1/2 : minimum refrigeration**
Thermostat set to **3-5 : medium refrigeration**
Thermostat set to **6/7 : maximum refrigeration**
Thermostat set to **•: no refrigeration, no light**

Setting the thermostat knob to • turns the whole appliance off.

* Available only on certain models

REFRIGERATOR LIGHT

The light system inside the refrigerator compartment uses LEDs light, allowing a better lightning than traditional light bulbs as well as a very low energy consumption.

Contact the Technical Assistance Service if you need a replacement.

Important: The refrigerator compartment light switches on when the refrigerator door is opened.

SHELVES

All of the drawers, door shelves and shelves can be removed.

DOOR

DOOR REVERSIBILITY

Note: The direction of door opening can be changed. If this operation is performed by After-sales Service it is not covered by the warranty.

Follow instruction in **Installation Guide**.

HOW TO USE THE APPLIANCE

FIRST TIME USE

Wait at least two hours, after the installation, before connecting the appliance to the power supply.
Connect the appliance to the power supply and turn the thermostat knob to switch on the appliance.

After turning the appliance on, you must wait for 4-6 hours for the correct storage temperature to be reached for a normally filled appliance. Position the antibacterial anti-odour filter in the fan as demonstrated in the filter packaging (if available).

REFRIGERATOR COMPARTMENT AND FOOD STORAGE

The refrigerator compartment allows for the storage of fresh food and drink. The refrigerator compartment defrosts completely automatically. The occasional presence of drops of water on the internal back wall of the compartment is a sign of the automatic defrosting phase. The defrosting water is channelled into a drain and then collected in a container, where it evaporates.

Note: the ambient temperature, how often the doors are opened and the position of the appliance may affect the internal temperatures in the two compartments. Set the temperatures depending on these factors.
In very humid conditions, condensation may form in the refrigerator compartment, especially on the glass shelves.
In this case, it is recommended that you close containers with liquids in (e.g. a pot of stock), wrap up food with a high water content (e.g. vegetables) and turn on the fan, if there is one.
All of the drawers, door shelves and shelves can be removed.

AIR VENTILATION

The natural circulation of air in the refrigerator compartment results in zones with different temperatures. It is coldest directly above the fruits and vegetables crisper and at the rear wall. It is warmest at the top front of the compartment. Insufficient ventilation results in an increase in energy consumption and reduction of the refrigerating performance.

HOW TO STORE FRESH FOOD AND BEVERAGE

Foods which give off a large amount ethylene gas (apples, apricots, pears, peaches, avocado, figs, prunes, blueberries, mellons, beans) and those that are sensitive to this gas, such as fruit vegetables and salad, should always be separated or wrapped so as not to reduce the storage life; for example do not store tomatoes together with kiwi fruits or cabbage.
Do not store food too close together to enable sufficient air circulation. Use recyclable plastic, metal, aluminum and glass containers and cling film to wrap foods.

If you have a little quantity of food to store in the refrigerator, we recommend to use the shelves above the crisper for fruits and vegetables since this is the coolest area of the compartment. Always use closed containers for liquids and for food that may give off or be tainted by odor or flavor transfer or cover them. To avoid bottles falling over, you can use the bottle holder (available on selected models).

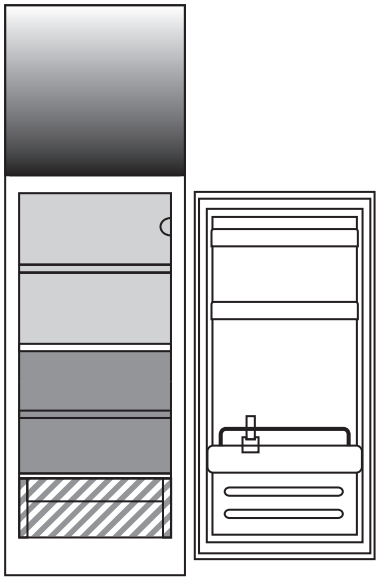

Legend

TEMPERATE ZONE
Suggested for the storage of tropical fruit, cans, drinks, eggs, sauces, pickles, butter, jam

COOL ZONE
Suggested for the storage of cheese, milk, daily food, delicatessen, yogurt

COOLEST ZONE
Suggested for the storage of cold cuts, desserts, fish and meat

FRUIT & VEGETABLE DRAWER

FREEZER COMPARTMENT AND FOOD STORAGE

The freezer compartment allows for the storage of frozen food (for the period indicated on the packaging) and the freezing of fresh food.
The quantity of fresh food that can be frozen in 24 hours is written on the rating plate.

Arrange the fresh food in the freezing area inside the freezer compartment, leaving enough space around the food packages to allow air to circulate freely. It is advisable that you do not re-freeze food that has partially defrosted. It is important to wrap the food in a way that prevents the ingress of water, humidity or condensation.

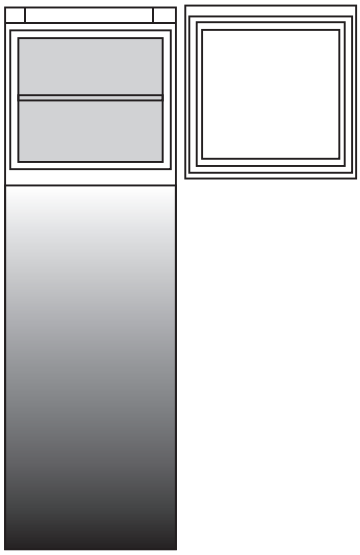

To get more volume, the freezer compartment can be used without the grid. Make sure that the door is closed properly after putting the food back on the grid.

ICE CUBES

Fill 2/3 of the ice tray with water and put it back in the freezer compartment. Do not use sharp or pointed objects to remove the ice under any circumstances.

Legend

FREEZING ZONE

STORAGE TIMES FOR HOME FROZEN FOODS

Product	**Storage period**
Butter or margarine	6 months
Cheese	3 months
Fish Shellfish	2/3 months 1 month
Fruits (except citrus)	8-12 months
Ice cream or sherbet	2/3 months
Meat Ham- sausage Roasts (beef-pork- lamb) Steaks or chops (beef-lamb-pork)	 2 months 8/12 months 4 months
Milk, fresh fluid	1-3 months
Poultry (chicken-turkey)	5- 7 months
Vegetables	8-12 months

HOW TO DEFROST THE FREEZER COMPARTMENT

1. It is advisable to set the temperature colder or turn on the Fast Freeze four hours before removing the food from the freezer compartment, to prolong the preservation of the food during the defrosting phase.
2. To defrost, turn the appliance off and remove the drawers. Put the frozen food in a cool place. Leave the door open to allow the frost to melt. To prevent the water from escaping during the defrost, it is advised that you place an absorbent cloth on the bottom of the freezer compartment and wring it out regularly.
3. Clean the inside of the freezer compartment and dry it carefully.
4. Turn the appliance back on and put the food back inside.

FUNCTIONAL SOUNDS

1. A buzz generated by the compressor is normal while the product is working.



2. Gurgling and crackles are generated by the passage of the refrigerant gas inside the cooling circuit, therefore these are normal noises.



3. It's possibile to "hear" creaks when the compressor is active and inactive: it is a normal sound of the product's structure.



4. Check that the balconies on the inside of the refrigerator door, the shelves and the drawers in the refrigerator compartment are attached and positioned properly, to avoid possible vibrations.
5. Don't place glass containers (bottles, jars, etc.) in direct contact with each other, to avoid vibrations.
6. This device is equipped with a compressor that operates at an optimum speed to minimize energy consumption. So it may happen that in certain situations (in summer or if large quantities of food are introduced) that the compressor increases the speed and therefore it is more noisy than usual.

RECOMMENDATION IN CASE OF NO USE OF THE APPLIANCE

IN THE EVENT OF NON-USE OF THE APPLICANCE

Disconnect the appliance from the power supply, empty it, defrost it (if necessary) and clean it.
Keep the doors slightly ajar to let air circulate inside the compartments. By doing this, you avoid the development of mould and bad odours.

IN THE EVENT OF AN INTERRUPTION TO THE POWER SUPPLY

Keep the doors closed so the food stays cold for as long as possible. Do not re-freeze food that has partially defrosted. If there is a prolonged power cut, the black out alarm may also activate (in products with electronics).

CLEANING AND MAINTENANCE

Before any cleaning or maintenance operation, unplug the appliance from the mains or disconnect the electrical power supply.
Never use abrasives. Never clean refrigerator parts with flammable fluids.
Do not use steam cleaners.
The buttons and control panel display must not be cleaned with alcohol or alcohol-derived substances, but with a dry cloth.

Clean the appliance occasionally with a cloth and a solution of warm water and neutral cleaning agents specifically for cleaning the inside of the refrigerator.

To ensure the constant and correct flow of the defrosting water, regularly clean the inside of the drain situated in the back wall of the refrigerator compartment near the fruit and vegetable drawer using the utensil provided.

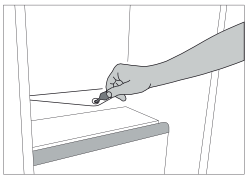

TROUBLESHOOTING

What to do if...	Possible reasons	Solutions
The appliance doesn't work.	There may be an appliance power supply problem.	Make sure: • there is not a power failure; • the plug is properly inserted in the power socket and the double-pole switch (if present) is in the correct position (on); • the household electrical system protection devices function; • the power cable is not broken; • the thermostat knob is not turned to "●".
The inside light does not work.	It may be necessary to replace the light bulb.	Disconnect the appliance from the power supply and contact the Technical Assistance Service if you need a replacement.
The internal temperature of the compartments is not cold enough.	The reasons could vary (see "Solution") column.	Check that: • the doors are closed properly; • the appliance is not installed near a heat source; • the temperature is appropriately set; • the circulation of air through the ventilation grilles on the base of the appliance is not obstructed.
There is water on the bottom of the refrigerator compartment.	The defrost water drain is blocked.	Clean the defrosting water drain (see section "Cleaning and Maintenance").
Excessive amount of frost in the freezer compartment.	The door to the freezer compartment is not closed properly.	• Check that there is nothing preventing the door from closing properly. • Defrost the freezer compartment. • Make sure the appliance has been correctly installed.
The front edge of the appliance that the door gaskets seal against is hot.	This is not a problem. It prevents condensation from forming.	A solution is not needed.
The temperature of the refrigerator compartment is too cold.	• The set temperature is too cold. • A large amount of fresh food may have been placed in the freezer compartment.	• Try to set a less cold temperature. • If fresh food has been put in the freezer compartment, wait until the freezing has been completed. • Turn off the fan (if present) described in the paragraph "FAN".

AFTER-SALES SERVICE

BEFORE CALLING THE AFTER-SALES SERVICE

1. See if you can solve the problem by yourself with the help of the suggestions given in the **TROUBLESHOOTING**.
2. Switch the appliance off and back on again to see if the fault persists.

IF AFTER THE ABOVE CHECKS THE FAULT STILL OCCURS, GET IN TOUCH WITH THE NEAREST AFTER-SALES SERVICE

To receive assistance, call the number shown on the warranty booklet or follow the instructions on the website **www.whirlpool.eu**

When contacting our Client After sales service, always specify:

- a brief description of the fault;
- the type and exact model of the appliance;

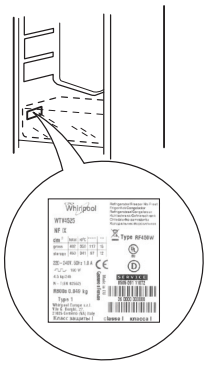

- the service number (number after the word Service on the rating plate). The service number is also indicated on the guarantee booklet;



- your full address;
- your telephone number.

If any repairs are required, please contact an authorised after-sales service (to guarantee that original spare parts will be used and repairs carried out correctly).

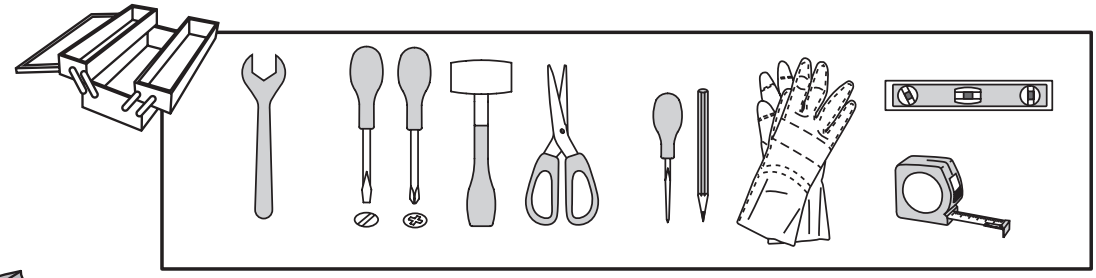

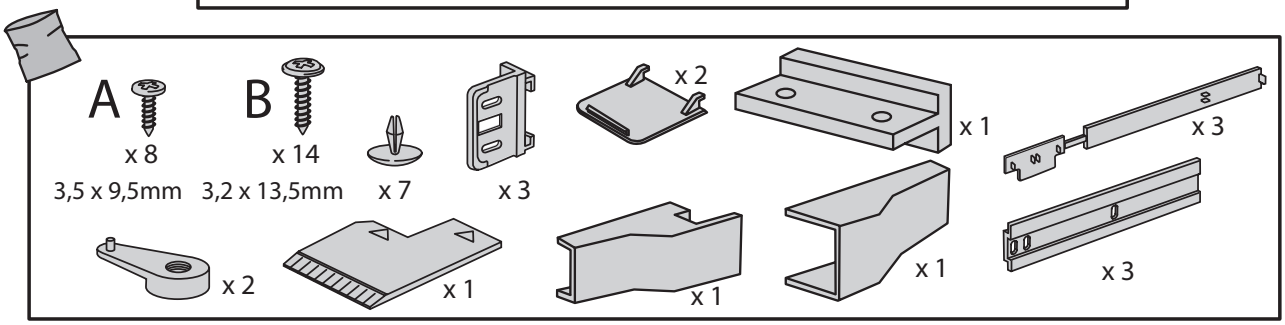

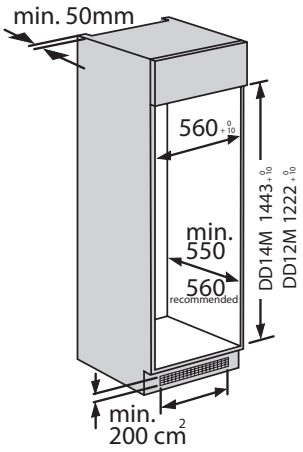

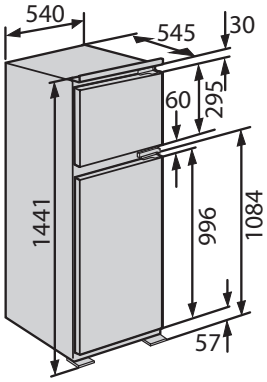

DD 14M

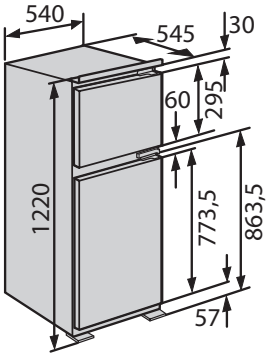

DD 12M

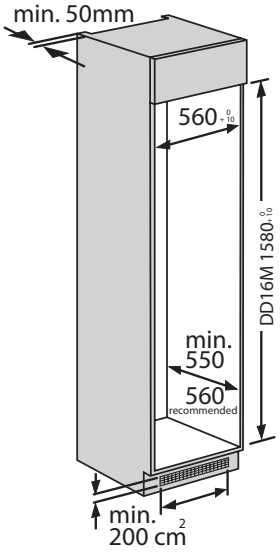

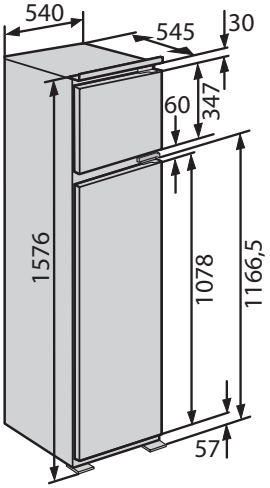

DD 16 M

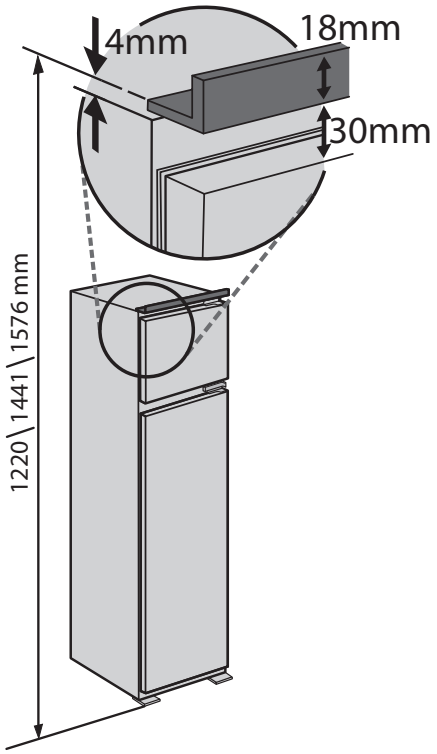

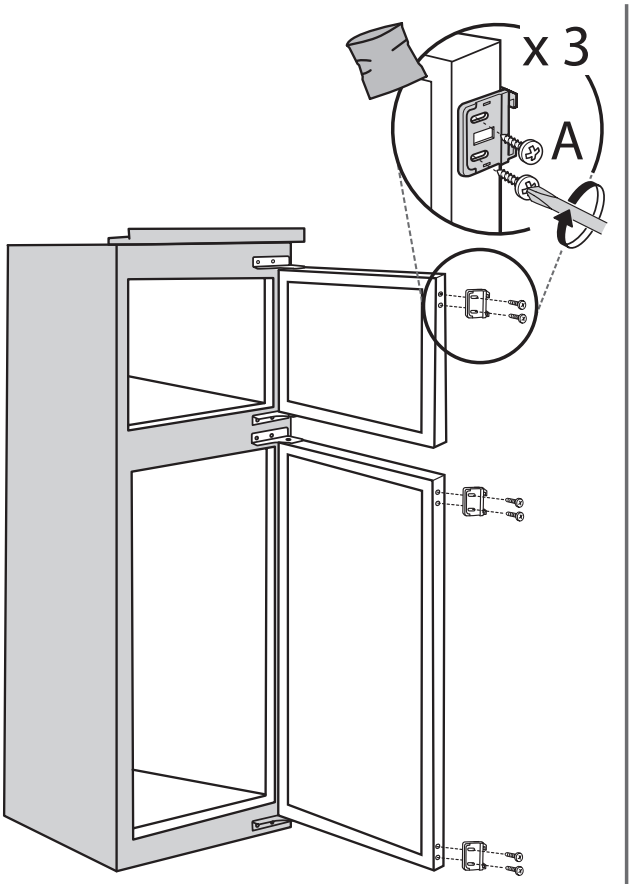
x 3
A

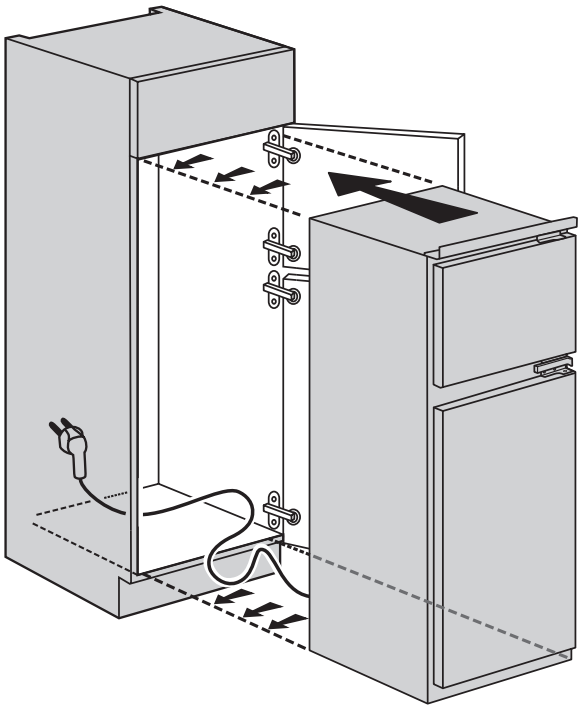

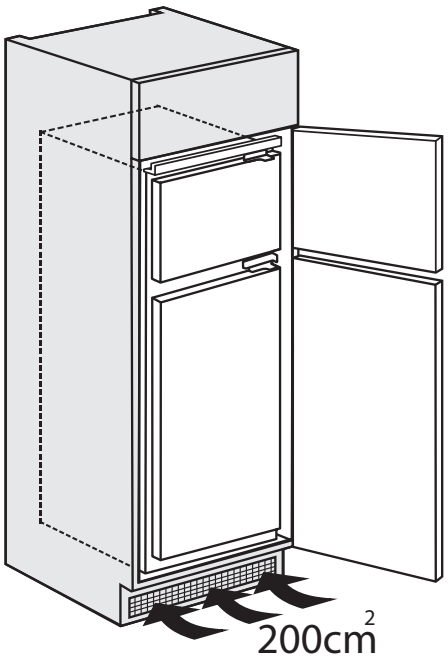
200cm²

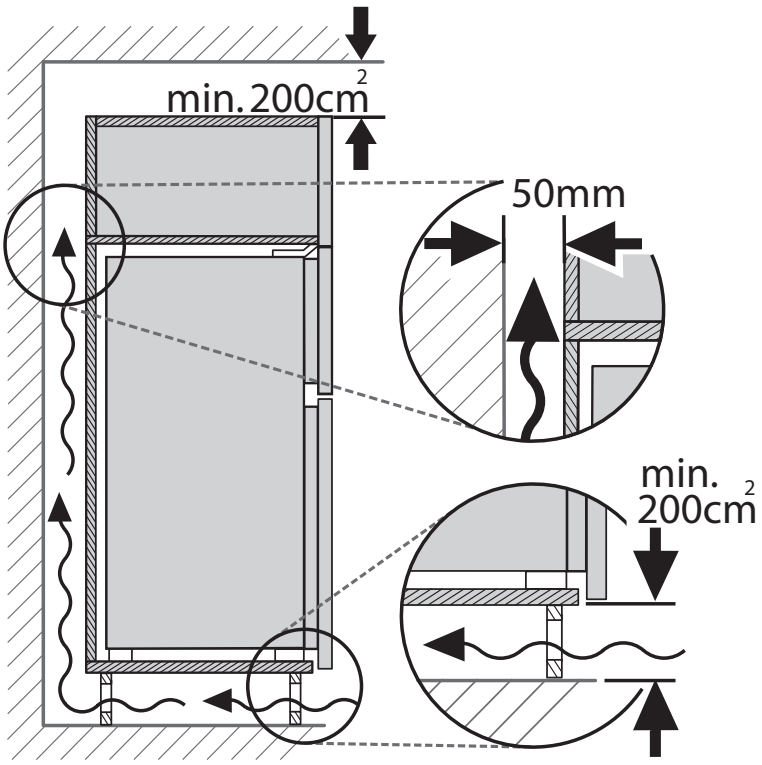
min. 200cm²
50mm
min.
200cm²

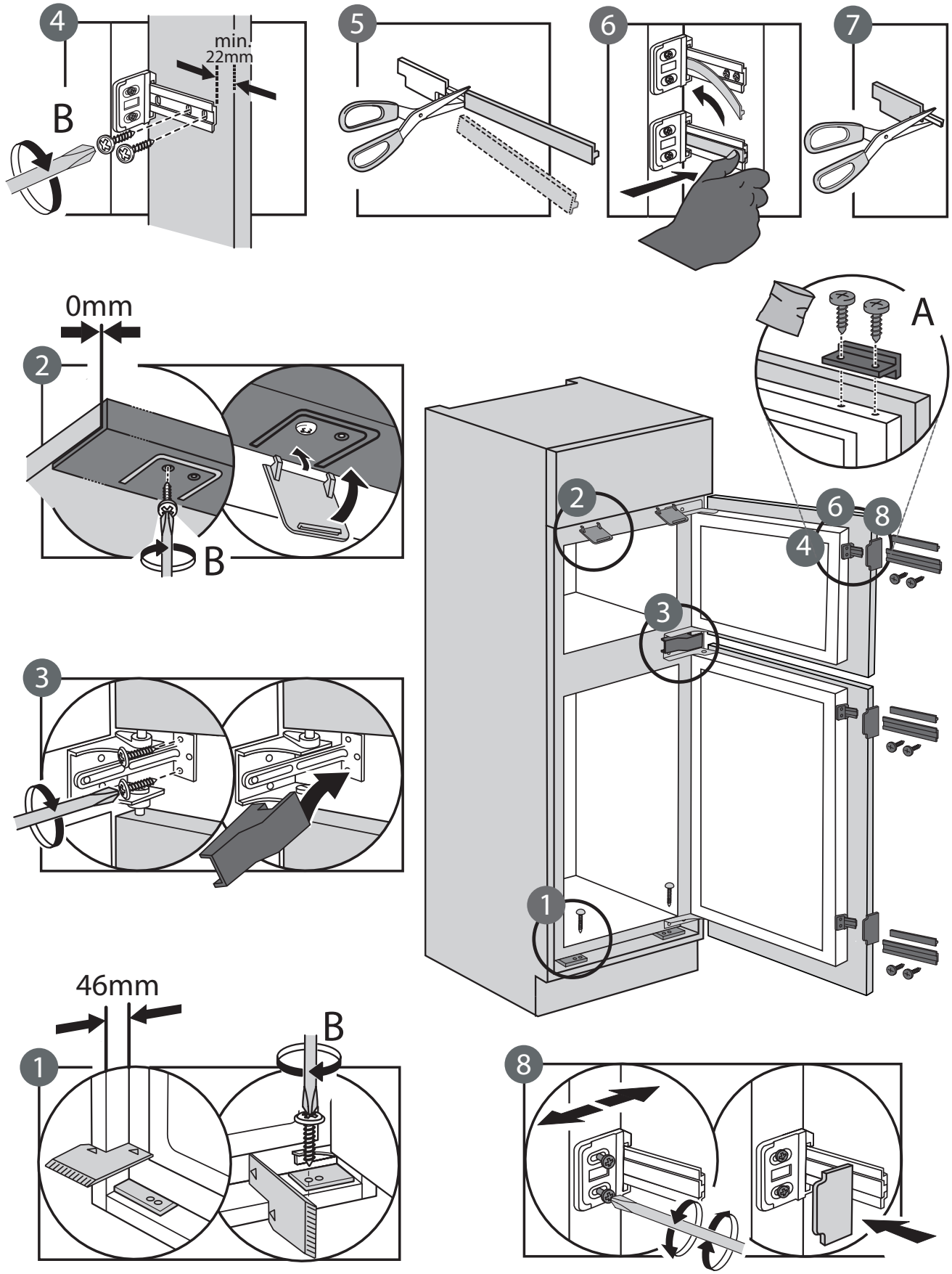
4
min.
22mm
B
5
6
7
0mm
2
B
A
2
6
8
4
3
3
1
46mm
1
B
8

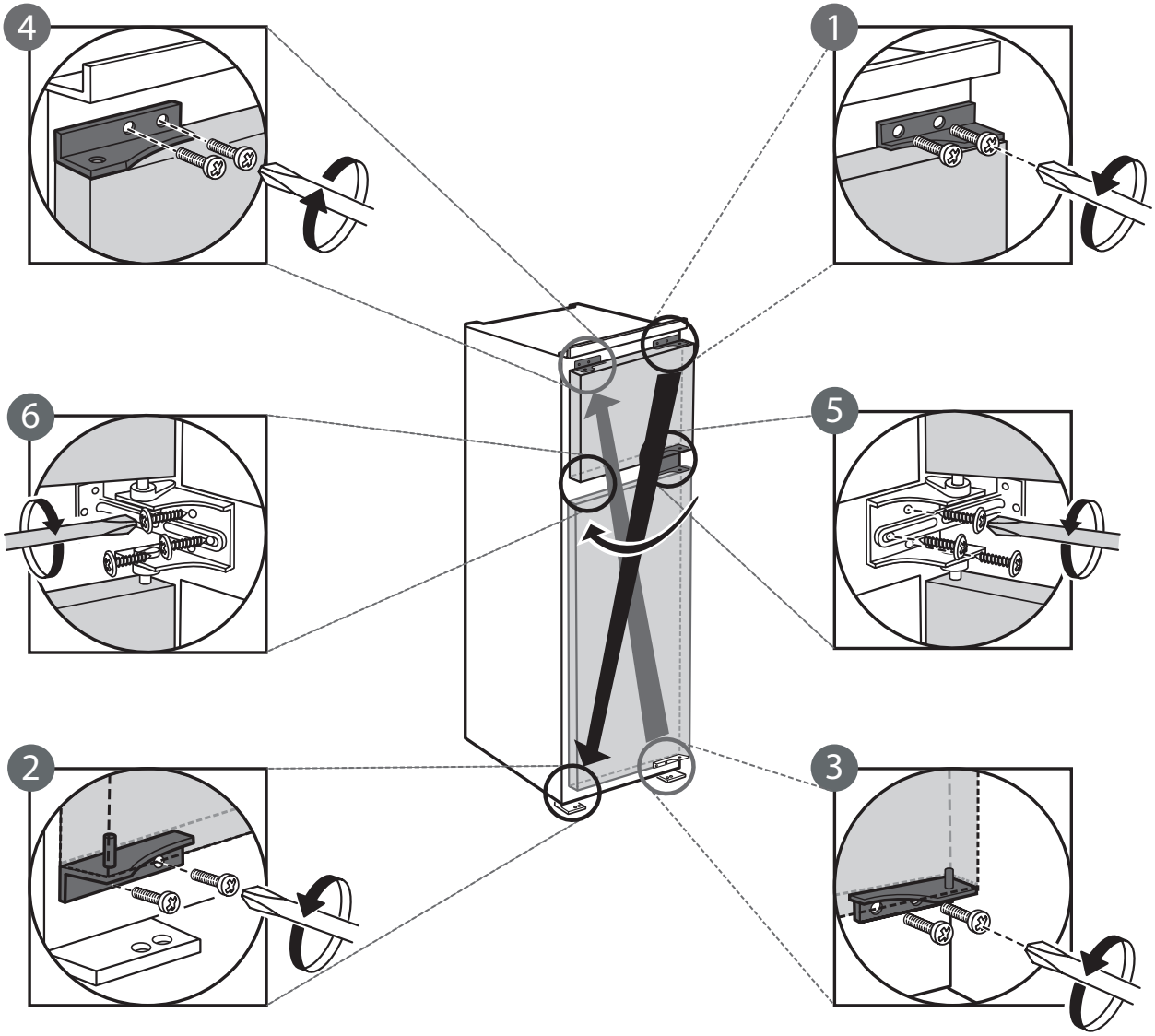
4
1
6
5
2
3

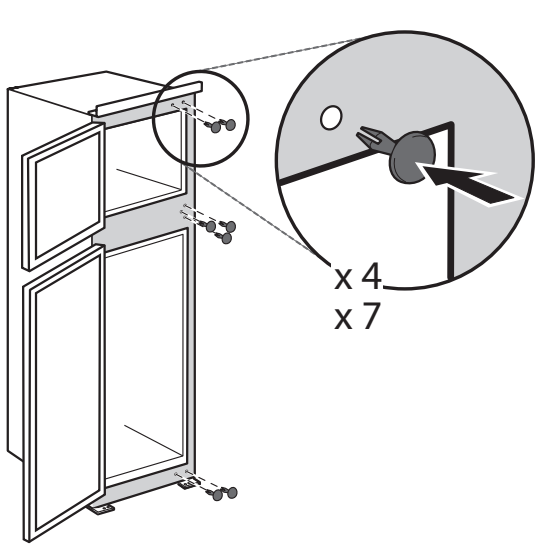
x 4
x 7

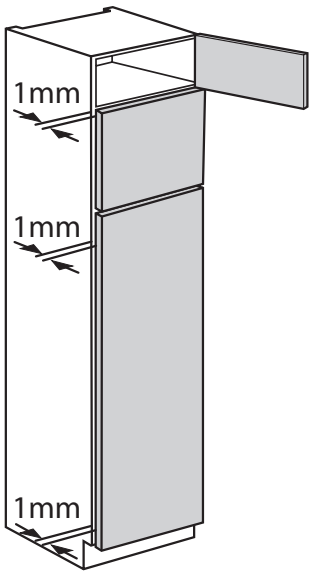
1mm
1mm
1mm