AKZM 754/IXL

12NC: 852575438010

GTIN (EAN) code: 8003437827594



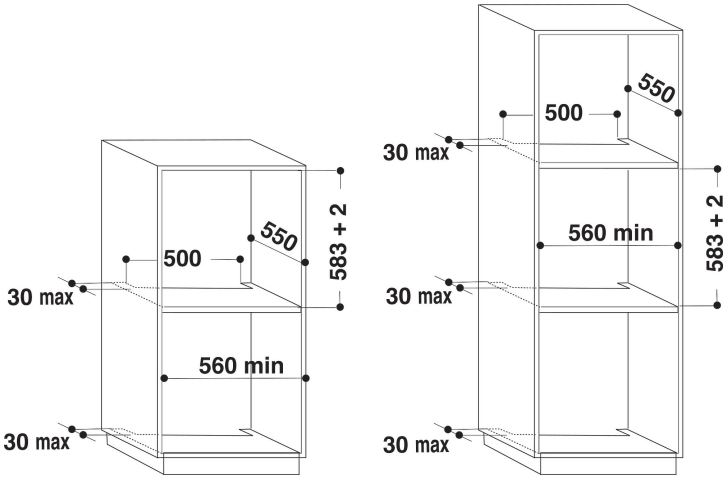

- 6TH Sense technology
- 30 Recipes
- Energy class A+
- Cavity 73 L
- Cook3
- Ready2Cook
- Defrost function
- Forced Air Fan Cooking
- Grill
- Easy Clean Enamel Interior
- Turbo grill function
- Maxi cooking
- Pastry function
- Favourite Recipes
- Special functions
- Fast Pre-Heating
- Tilting Grill for easy cleaning

Whirlpool built in electric oven: inox color - AKZM 754/IXL

This Whirlpool built in Oven features: advanced electric technology allowing you to cook dishes saving energy. Halogen lamp allowing a more energy-efficient performance. Exclusive 6th SENSE technology, that allows you to pick among a variety of pre-programmed recipes, and your oven will automatically adjust cooking, temperature and time settings, to ensure perfect results. Innovative Cook3 function, that allows you to cook up to three separate dishes at the same time, without the risk of aromas mixing. Ready2Cook function, that uses a powerful convection system to quickly reach the right temperature, and completely eliminate pre-heating need.

6th Sense Fusion Ambient
Ready-to-use recipes. Select one of 30 pre-set recipes, and your oven will automatically adjust cooking, temperature and time settings, while continually monitoring your dishes, to ensure perfect results.

Ready2cook
No pre-heating required. The Ready2Cook function uses a powerful convection system to quickly reach the right temperature, and completely eliminate the need for pre-heating.

Cook3
No aroma mixing. With the innovative Cook3 function, you can cook up to three separate dishes at the same time, without the risk of aromas mixing.

Ixelium
Long lasting beauty. The revolutionary iXelium nanotechnology treatment protects your oven from scratches and ensures a perfect shine, always. And it's easy to clean: all you need is water and a soft cloth.

Easy to clean
Easy to clean. To clean your oven, simply use warm water and a soft cloth, no need to use harsh chemicals or cleaners.

Push push
The knobs' 'push push' design ensure extra comfortable ease of use and a premium look.

XXL cavity
All the space you need. The XXL cavity in your oven has a capacity of 75 litres with 5 different shelf positions available.

Energy class
Outstanding energy savings. Ovens with an A/ A+ energy rating offer an excellent level of energy efficiency, ensuring lower consumption and saving you money on your energy bills.

AKZM 754/IXL

12NC: 852575438010

GTIN (EAN) code: 8003437827594

Whirlpool
SENSING THE DIFFERENCE

MAIN FEATURES

Product group	Oven
Commercial code	AKZM 754/IXL
Main colour of product	Inox
Construction type	Built-in
Type of control	Mechanical and electronic
Type of control settings	-
Are any hobs controls integrated?	No
Which kind of hobs can be controlled?	-
Automatic programmes	Yes
Current (A)	13
Voltage (V)	220-240
Frequency (Hz)	50/60
Length of Electrical Supply Cord (cm)	90
Plug type	No
Depth with open door 90 degree (mm)	-
Height of the product	595
Width of the product	595
Depth of the product	564
Minimum niche height	0
Minimum niche width	0
Niche depth	0
Net weight (kg)	35.5
Usable volume (of cavity)	73
Integrated Cleaning system	No
Grids of the cavity	2
Trays	1

TECHNICAL FEATURES

Timer	-
Time control	Electronic
Time-setting options	Start and Stop
Safety device	-
Interior light	Yes
Number of interior lights of the cavity	1
Position of interior lights of the cavity	Rear
Oven guides of the cavity	Grids
Probe of the cavity	No

PERFORMANCES

Energy input	Electric
Type of energy of the cavity	Electricity
Energy efficiency class - NEW (2010/30/EU)	A+
Energy consumption per cycle conventional - NEW (2010/30/EU)	0.91
Energy consumption per cycle forced air convection - NEW (2010/30/EU)	0.7

