GMF 6422/IXL

12NC: 852440438000

GTIN (EAN) code: 8003437828904

SENSING THE DIFFERENCE



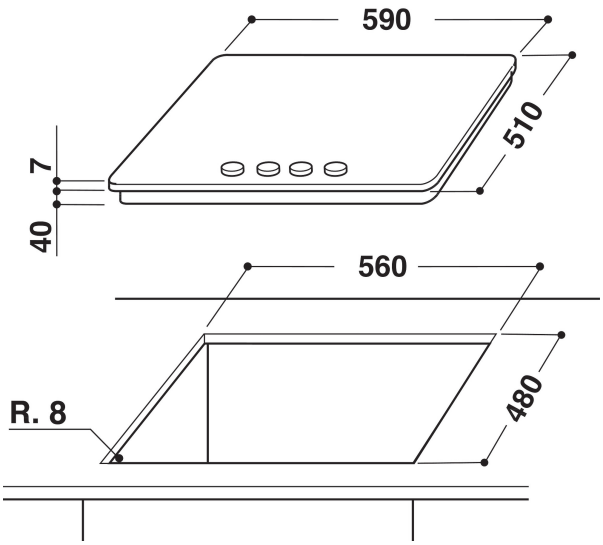

MAIN FEATURES

Product group	Hob
Construction type	Built-in
Type of control	N/A
Type of control settings	-
Number of gas burners	4
Number of electric cooking zones	0
Number of electric plates	0
Number of radiant plates	0
Number of halogen plates	0
Number of induction plates	0
Number of electric warming zones	0
Location of control panel	Front
Basic surface material	Inoxclearcoat
Main colour of product	Inox
Electrical connection rating (W)	0
Gas connection rating (W)	8000
Current (A)	0,2
Voltage (V)	230
Frequency (Hz)	50
Length of Electrical Supply Cord (cm)	85
Plug type	No
Gas connection	Cilindric
Width of the product	590
Height of the product	41
Depth of the product	510
Minimum niche height	38
Minimum niche width	560
Niche depth	480
Net weight (kg)	10.5
Automatic programmes	No

TECHNICAL FEATURES

Power on indicator	No
Number of indicators	0
Type of regulation	Semirapid
Type of lid	Without
Residual heat indicator	Without
Main on/off switch	No
Safety device	-
Timer	No

PERFORMANCES

Energy input	Gas