LINDY®

CONNECTION PERFECTION

Multimedia Storage Box

User Manual *English*



LINDY No. 20966

www.LINDY.com

© LINDY ELECTRONICS LIMITED & LINDY-ELEKTRONIK GMBH - FIRST EDITION (May 2011)

Features

- Fits in any 5.25” bay
- Accommodates 12.7mm Slim Optical Drive
- For use with a 2.5” SATA HDD (9.5mm height)
- 2 additional USB 2.0 ports
- Tool-less, screw-less and tray-less 2.5” HDD enclosure
- Interfaces: SATA/PATA for Slim ODD, SATA for 2.5” HDD
- Extremely efficient use of space, provides multiple functions in a single unit
- Material: metal with black, plastic front panel design
- LED indicators on front panel: Blue (ON when power cable is connected and hard drive is installed) and orange LED (flashes when reading/writing data)

Package Contents

- Multimedia Storage Module
- SATA data cable
- SATA power cable
- Mounting screws
- This manual

Installation

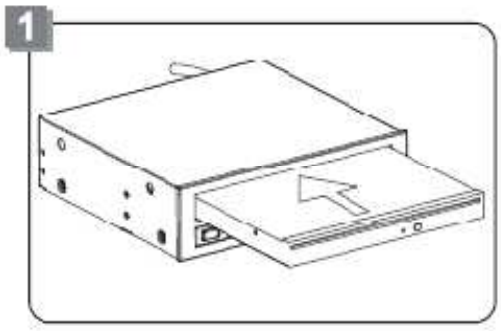

Push the 12.7mm slim optical drive into the slim drive bay.

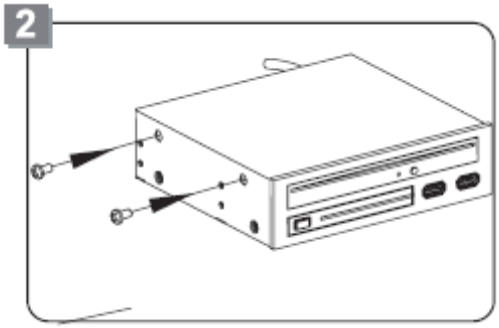

Then use a magnetic screwdriver to secure 2 screws to the optical drive.

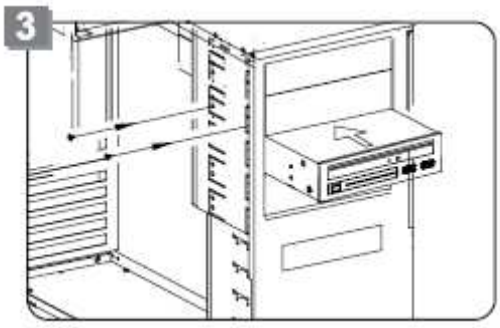

Place the Multimedia Storage Box into an available 5.25” bay and fix it with screws.

Connection

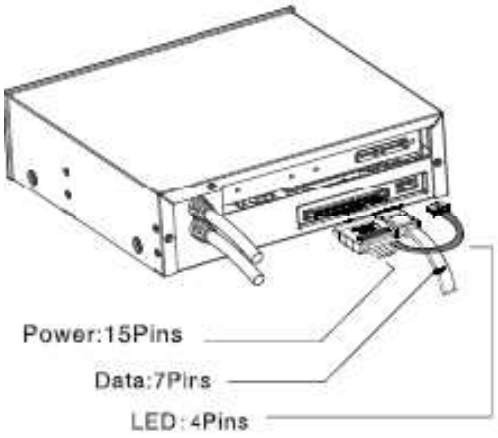

1. Connect the SATA power cable (SATA 15pin and 4pin LED wire connector) to the back of the module and the four pin 5.25" power connector to your computer.
2. Connect the SATA 7pin data cable to the back of the module and to your computer's motherboard or SATA Raid Card.



3. Connect your optical drive's data cable (SATA or PATA, not included!) and power cable into your motherboard and power supply.
4. Connect the internal USB cable connector to the motherboard and power supply.

Inserting the 2.5" Hard Drive

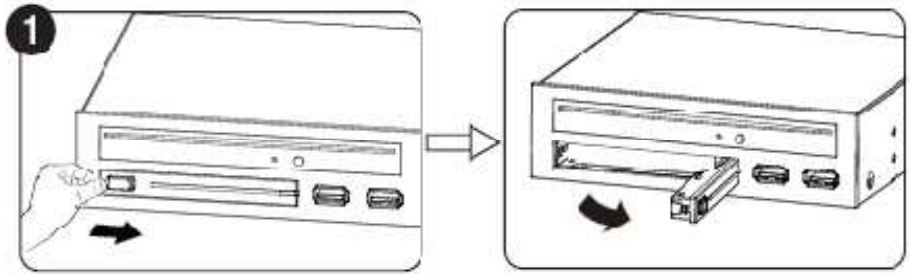

Pull the key of the 2.5" HDD gently from left to the right to eject the panel.

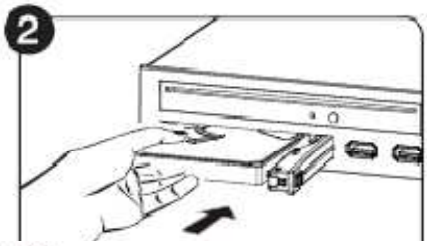

Put the 2.5" HDD into the module, with the SATA port facing the back of the enclosure.

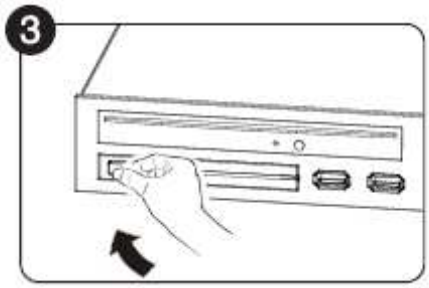

Close the front panel.

Removing the Hard Drive

Pull the key from left to right to eject the panel and take out the 2.5” hard drive.
Do not eject the hard drive while it is busy!

Herstellergarantie

LINDY gewährt für dieses Produkt über die gesetzliche Regelung hinaus eine zweijährige Herstellergarantie ab Kaufdatum. Die detaillierten Bedingungen dieser Garantie finden Sie auf der LINDY Website aufgelistet bei den AGBs.

LINDY No 20966

1st Edition, May 2011

www.lindy.com