Zebra Technologies International, LLC

Xi4 Series Parts Catalog



Outer Casing Components

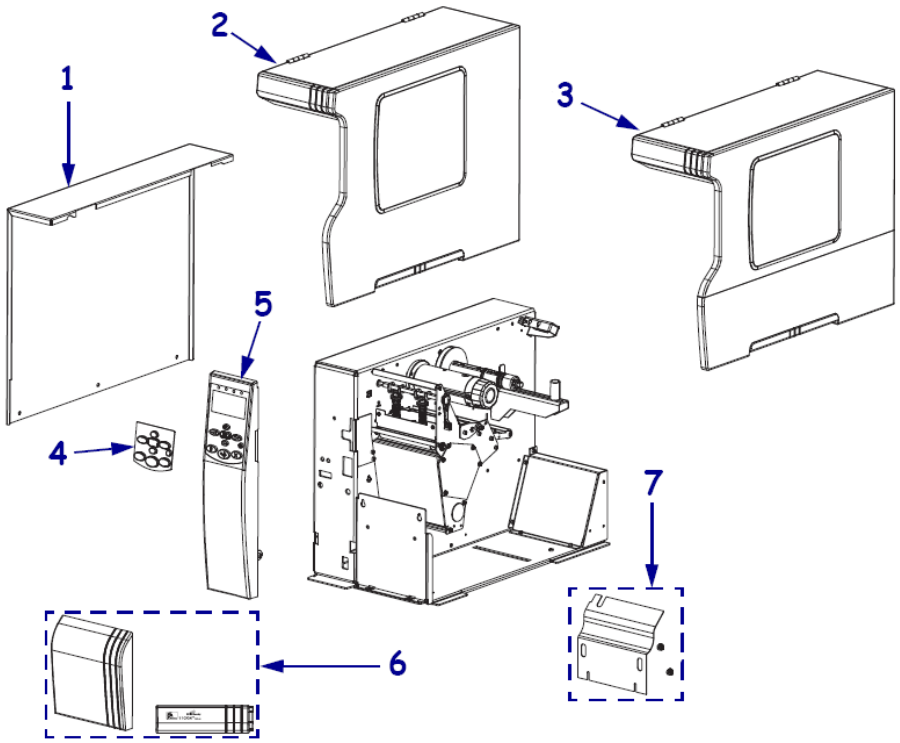

Item Number	Description	Part Number	Kit Quantity
1	Kit Xi4 Series Electronics Cover	P1006034	1
2	Kit 110Xi4 Media Cover Standard Door	P1006036	1
2	Kit 140Xi4 Media Cover Standard Door	P1006037	1
2	Kit 170Xi4 Media Cover Standard Door	P1006038	1
2	Kit 220Xi4 Media Cover Standard Door	P1006039	1
3	Kit 110Xi4 Media Cover Bi-Fold Door	P1006041	1
3	Kit 140Xi4 Media Cover Bi-Fold Door	P1006042	1
3	Kit 170Xi4 Media Cover Bi-Fold Door	P1006044	1
3	Kit 220Xi4 Media Cover Bi-Fold Door	P1006045	1
4	Kit Xi4 Series Covers for the Control Panel (3 pack)	P1007546	3
5	Kit Xi4 Series Control Panel	P1006033	1
6	Kit 110Xi4 Trim Panel and Nameplates 203 & 300 & 600 dpi	P1006046	1
6	Kit 140Xi4 Trim Panel and Nameplate 203 dpi	P1006047	1
6	Kit 170Xi4 Trim Panel and Nameplates 203 & 300 dpi	P1006048	1
6	Kit 220Xi4 Trim Panel and Nameplates 203 & 300 dpi	P1006050	1
7	Kit 110Xi4 Front Plate for Tear models	P1006051	1
7	Kit 140Xi4 Front Plate for Tear models	P1006052	1
7	Kit 170Xi4 Front Plate for Tear models	P1006053	1
7	Kit 220Xi4 Front Plate for Tear models	P1006055	1
	Kit Xi4 Series Media Window for Standard Door	P1006035	1
	Kit Xi4 Series Media Window for BiFold Door	P1006522	1
	Kit 220Xi4 Damper Replacement for Media Door	P1006056	1

Print Mechanism Components

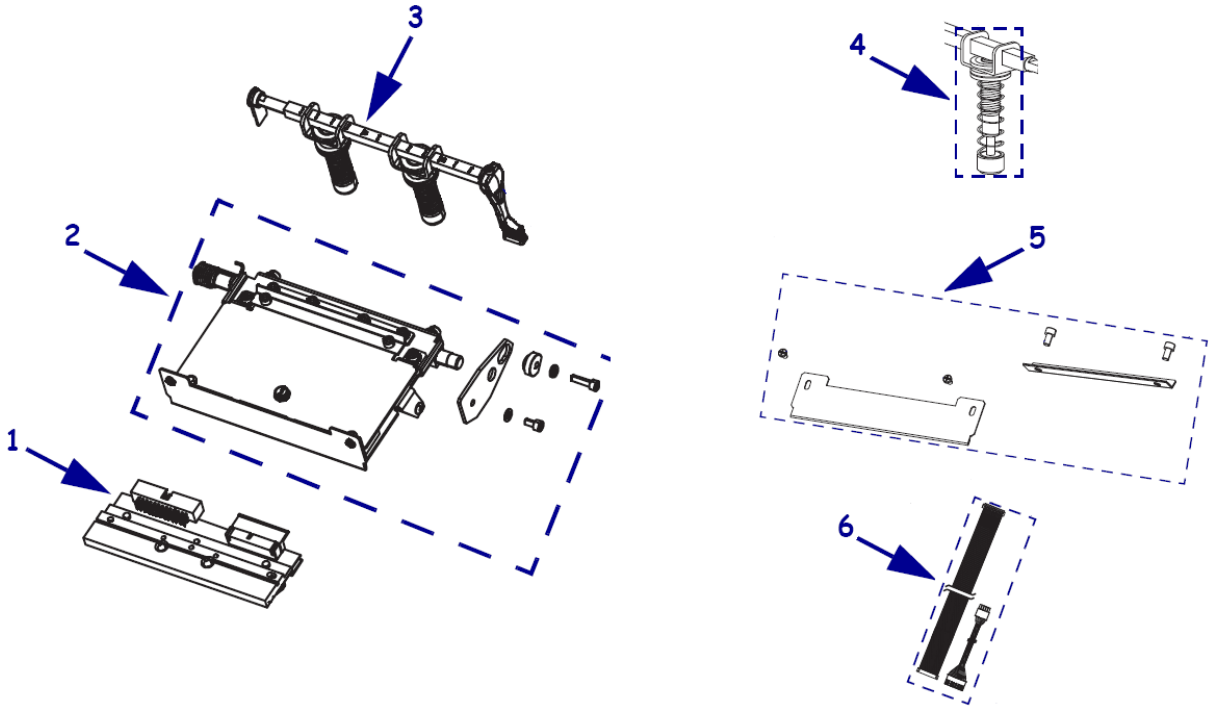

Item Number	Description	Part Number	Kit Quantity
1	Kit 110Xi4 Printhead 203 dpi	P1004230	1
1	Kit 110Xi4 Printhead 300 dpi	P1004232	1
1	Kit 110Xi4 Printhead 600 dpi	P1004233	1
1	Kit 140Xi4 Printhead 203 dpi	P1004234	1
1	Kit 170Xi4 Printhead 203 dpi	P1004236	1
1	Kit 170Xi4 Printhead 300 dpi	P1004237	1
1	Kit 220Xi4 Printhead 203 dpi	P1004238	1
1	Kit 220Xi4 Printhead 300 dpi	P1004239	1
2	Kit 110Xi4 Print Mechanism Hardware	P1006146	1
2	Kit 140Xi4 Print Mechanism Hardware	P1006151	1
2	Kit 170Xi4 Print Mechanism Hardware	P1006152	1
2	Kit 220Xi4 Print Mechanism Hardware	P1006154	1
3	Kit 110Xi4 Pivot Bar & Toggle Assemblies	G41022M	1
3	Kit 140Xi4 Pivot Bar & Toggle Assemblies	G48202M	1
3	Kit 170Xi4 Pivot Bar & Toggle Assemblies	38202M	1
3	Kit 220Xi4 Pivot Bar & Toggle Assemblies	G22222M	1
4	Kit 110, 140, 170Xi4 Toggle Assembly Only	35099M	1
4	Kit 220Xi4 Toggle Assembly Only	22099M	1
5	Kit 110Xi4 Ribbon Strip Plate and Ribbon Static Brush	P1006095	1
5	Kit 140Xi4 Ribbon Strip Plate and Ribbon Static Brush	P1006096	1
5	Kit 170Xi4 Ribbon Strip Plate and Ribbon Static Brush	P1006097	1
5	Kit 220Xi4 Ribbon Strip Plate and Ribbon Static Brush	P1006098	1
6	Kit Xi4 Series Cables for Printhead (power, data, ground)	P1006140	1

Platen Rollers

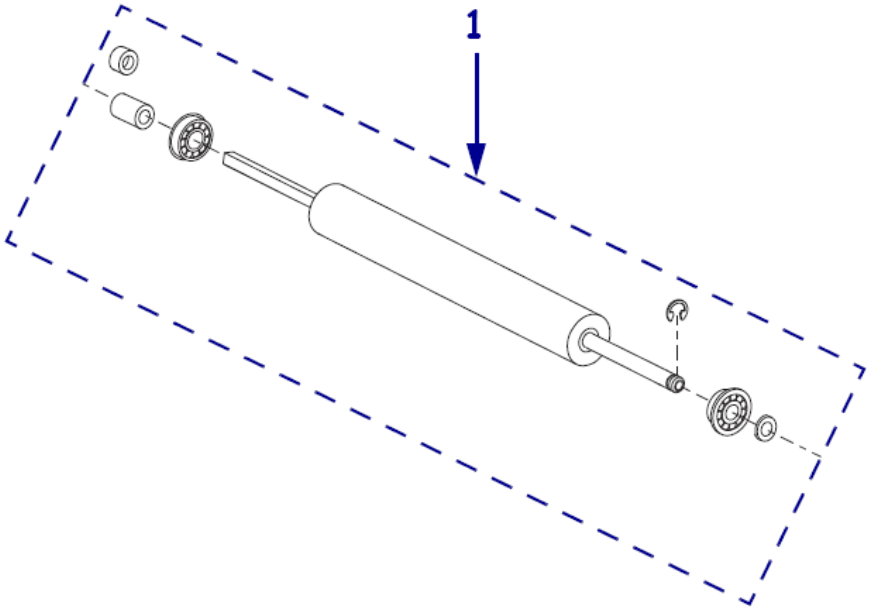

Item Number	Description	Part Number	Kit Quantity
1	Kit 110Xi4 Platen Roller 203 dpi & 300 dpi	G41011M	1
1	Kit 110Xi4 Platen Roller 600 dpi	P1004592	1
1	Kit 140Xi4 Platen Roller 203 dpi	G40038M	1
1	Kit 170Xi4 Platen Roller 203 dpi & 300 dpi	G46278M	1
1	Kit 220Xi4 Platen Roller 203 dpi and 300 dpi	G22101M	1

Xi4 Series Common Electronics

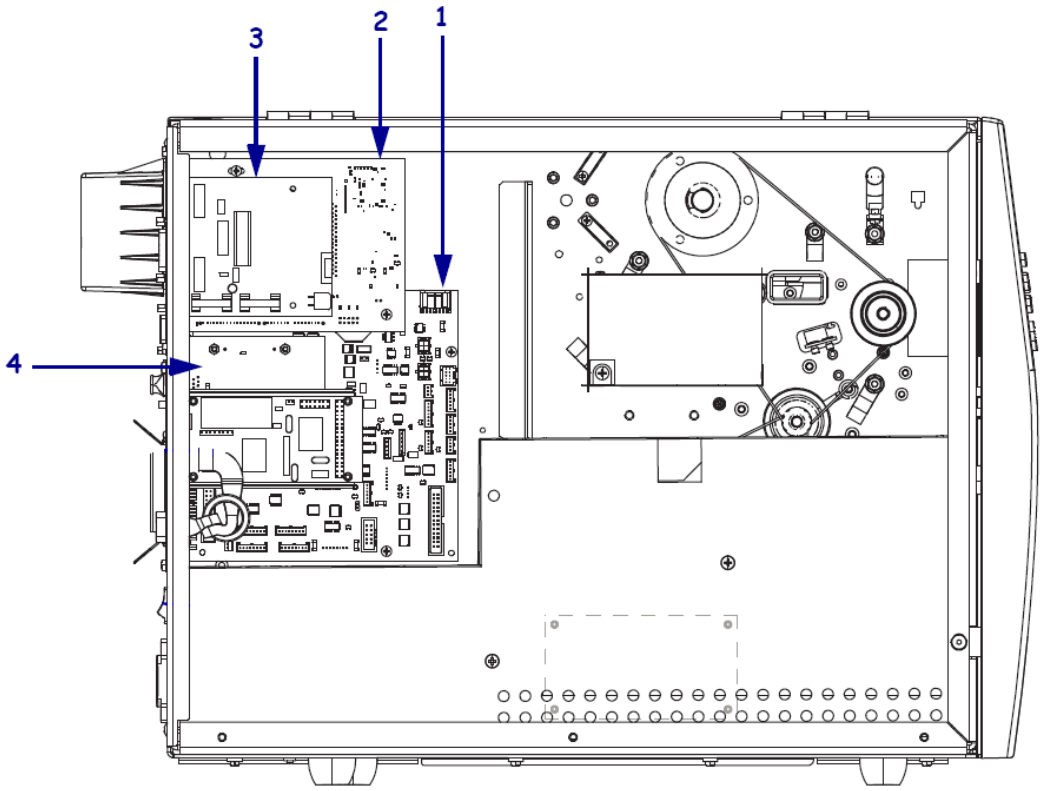

Item Number	Description	Part Number	Kit Quantity
1	Kit Xi4 Series Main Logic Board 8MB	P1053360-016	1
1	Kit Xi4 Series Main Logic Board 64MB	P1053360-017	1
2	Kit Xi4 Series ZebraNet Wireless b/g Print Server	P1032273	1
	Kit Replacement Antenna for Wireless b/g Print Servers	P1032276	1
2	Kit Xi4 Series Wireless Plus Board (requires separate radio card to enable wireless functionality--not included)	P1009634	1
3	Kit Xi4 Series Applicator Interface 5V	P1007561	1
3	Kit Xi4 Series Applicator Interface 24-28V	P1011156	1
4	Kit Xi4 Series IPv4 Internal Print Server IPv4	79823	1
4	Kit Xi4 Series IPv6 Internal Print Server IPv6	P1007564	1
	Kit Replacement Antenna for Internal Wireless Plus Print Servers	39538M	1
	Kit Xi4 Series Electronics Cables (various power and data cables for electronics)	P1006156	1
	USA Power Cord	46693	1
	Europe Power Cord	46629	1
	UK Power Cord	46637	1
	Japan Power Cord	37609	1
	China Power Cord	47612	1

110Xi4 Specific Electronics

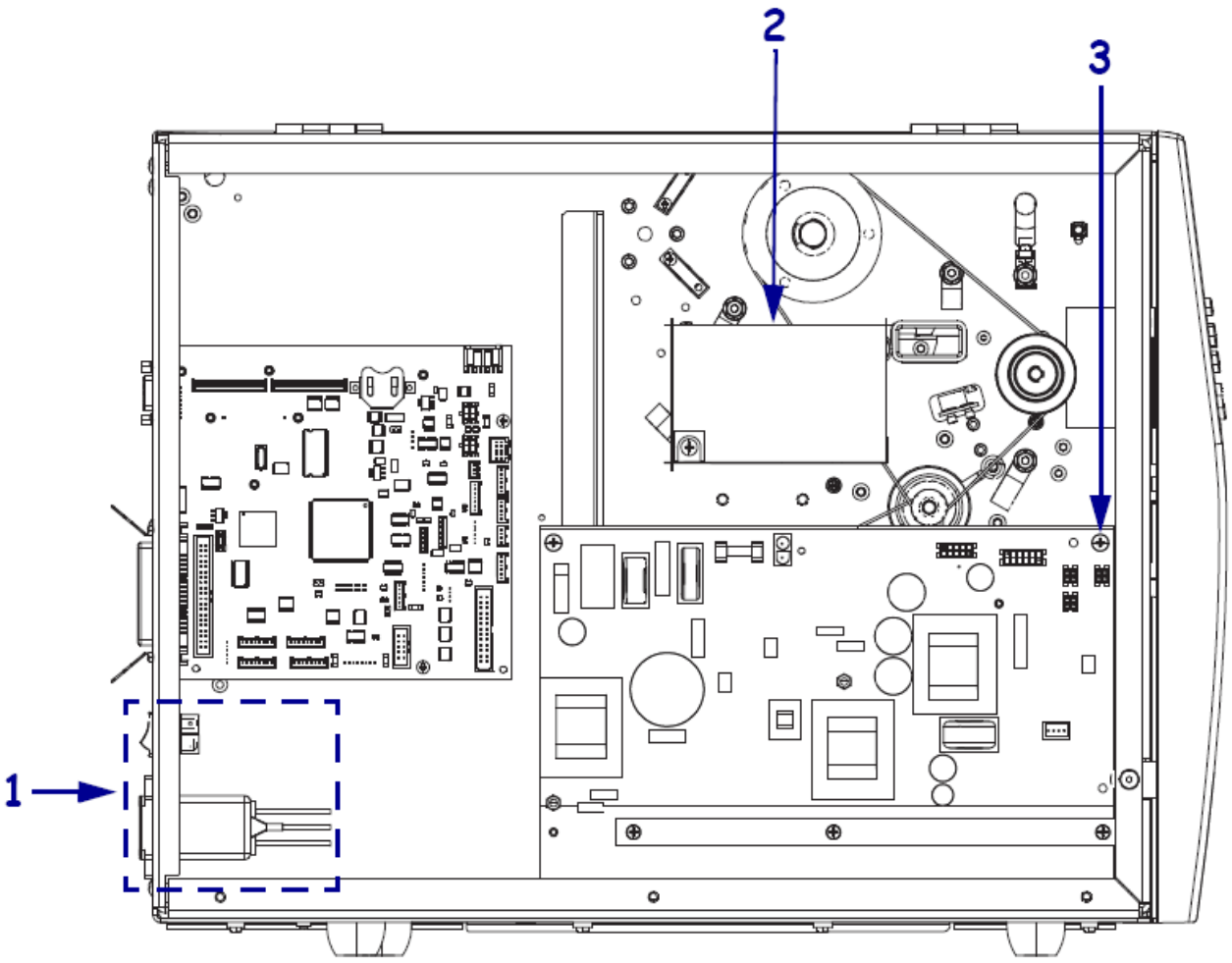

Item Number	Description	Part Number	Kit Quantity
1	Kit 110Xi4 Power Entry Module and Power Switch for Serial Numbers less than 14J131900636 (printers with older design power supply)	P1007559	1
2	Kit 110Xi4 Test Board for Printhead	P1077930	1
3	Kit 110Xi4 Power Supply (new design inlcudes integrated power entry module and power switch)	P1058301	1

140, 170 & 220Xi4 Specific Electronics

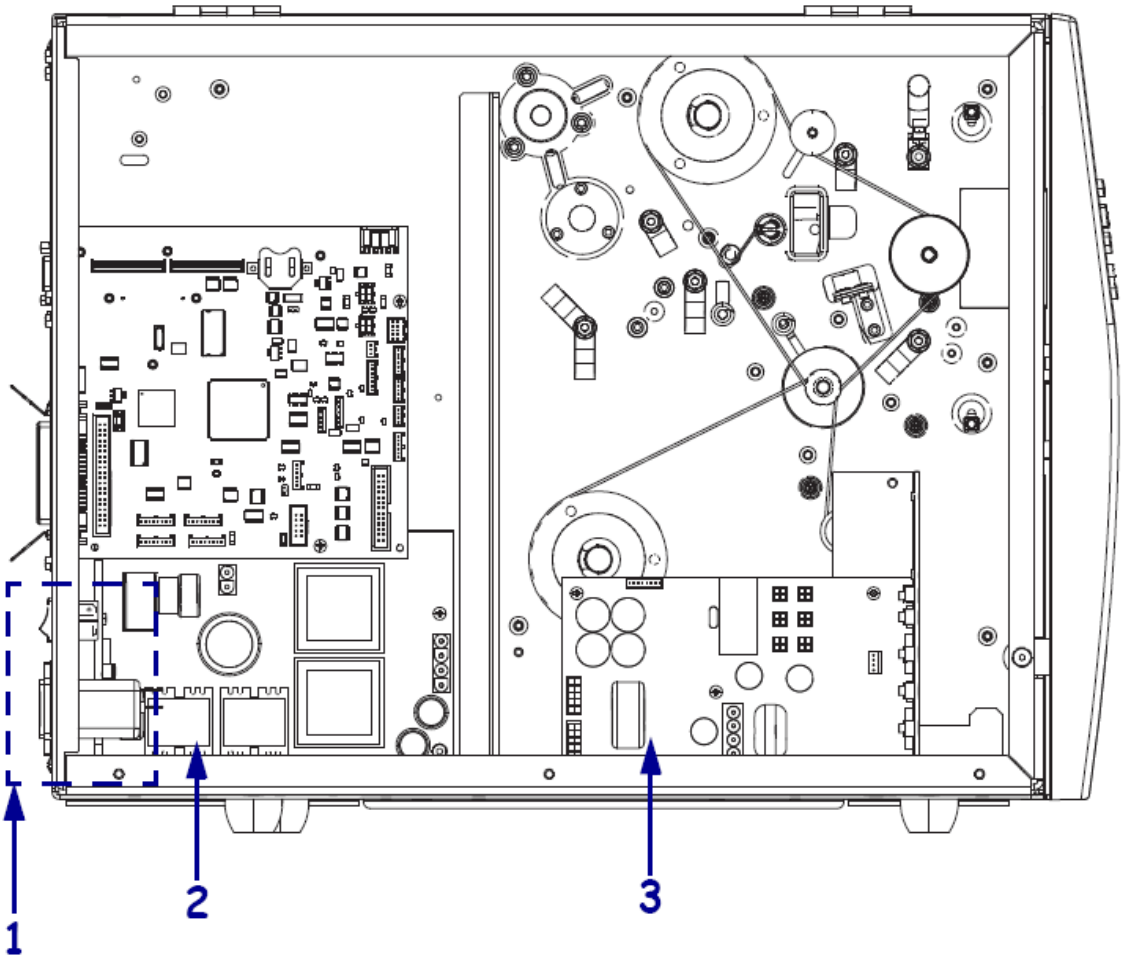

Item Number	Description	Part Number	Kit Quantity
1	Kit Power Entry Module and Power Switch. For 140Xi4 printers with serial numbers less than 15J152600534, 170Xi4 printers with serial numbers less than 16J13901459 and 220Xi4 printers with serial numbers less than 17J163000651.	P1007560	1
2	Kit AC Power Supply. For 140Xi4 printers with serial numbers less than 15J152600534, 170Xi4 printers with serial numbers less than 16J13901459 and 220Xi4 printers with serial numbers less than 17J163000651.	P1007557	1
3	Kit DC Power Supply. For 140Xi4 printers with serial numbers less than 15J152600534, 170Xi4 printers with serial numbers less than 16J13901459 and 220Xi4 printers with serial numbers less than 17J163000651.	P1040670	1
2 & 3	Kit AC/DC Combined Power Supply. One power supply unit that contains both AC/DC power supply units. Only for 140Xi4 printers with serial numbers greater than 15J152600534, 170Xi4 printers with serial numbers greater than 16J13901459 and 220Xi4 printers with serial numbers greater than 17J163000651.	P1077233	1

Sensors

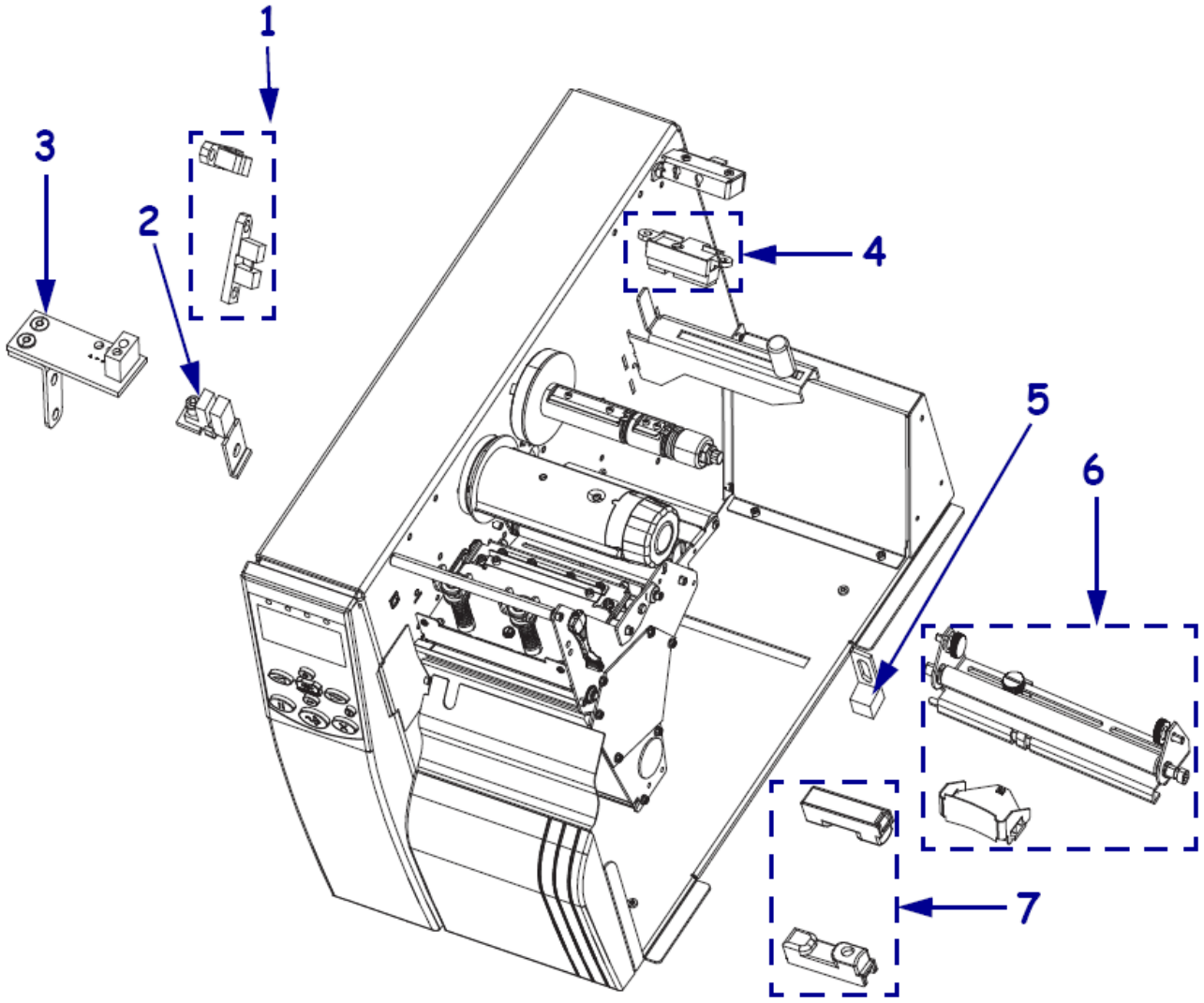

Item Number	Description	Part Number	Kit Quantity
1	Kit Xi4 Series Ribbon Low Sensor	P1006139	1
2	Kit Xi4 Series Printhead Open Sensor	P1006137	1
3	Kit Xi4 Series Reflective Sensor (Black Mark)	P1006135	1
4	Kit Xi4 Series Media Low Sensor	P1006138	1
5	Kit Xi4 Series Ribbon Out Sensor	P1006134	1
6	Kit 110Xi4 Media Sensor	P1059554	1
6	Kit 140Xi4 Media Sensor	P1006030	1
6	Kit 170Xi4 Media Sensor	P1006031	1
6	Kit 220Xi4 Media Sensor	P1059555	1
7	Kit Xi4 Series Take Label Sensor	P1006136	1
	Kit Xi4 Series Flag for Head Open Sensor	G46352M	1

Drive System Components

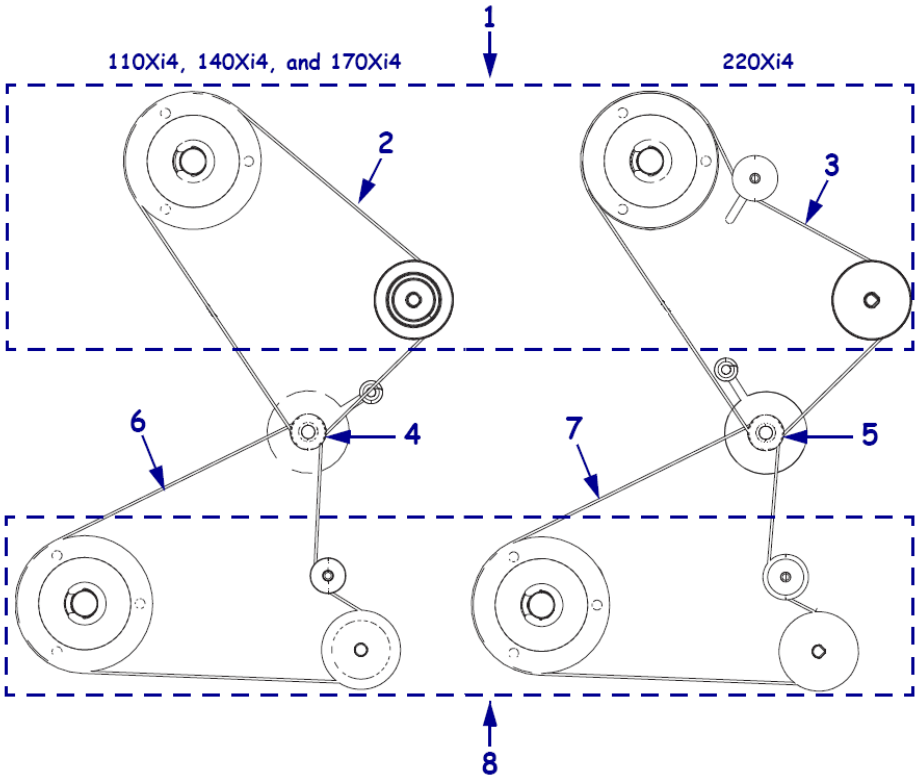

Item Number	Description	Part Number	Kit Quantity
1	Kit Xi4 Series Main Drive System (includes pulleys and belts for all dpi)	P1006069	1
2	Kit Main Drive Belt for 110Xi4 (203 & 300 dpi), 140Xi4 (203 dpi), 170Xi4 (203 & 300 dpi)	P1006066	1
2	Kit 110Xi4 Main Drive Belt for 600 dpi	P1006067	1
3	Kit 220Xi4 Main Drive Belt for 203 dpi	P1006066	1
3	Kit 220Xi4 Main Drive Belt for 300 dpi	P1006068	1
4	Kit Drive Motor with Pulley 110Xi4 (203 dpi), 140Xi4 (203 dpi), 170Xi4 (203 dpi)	G46198M	1
4	Kit Drive Motor with Pulley 110Xi4 (300 dpi) and 170Xi4 (300 dpi)	G46199M	1
4	Kit 110Xi4 Drive Motor with Pulley for 600 dpi printers with serial numbers less than 14J111900550	G33087-6M	1
4	Kit 110Xi4 Drive Motor with Pulley for 600 dpi printers with serial numbers greater than 14J111900550	P1035318	1
5	Kit 220Xi4 Drive Motor with Pulley for 203 dpi	G31197M	1
5	Kit 220Xi4 Drive Motor with Pulley for 300 dpi	G31199M	1
6	Kit Rewind Drive Belt for 110Xi4 (203 & 300 dpi), 140Xi4 (203 dpi), 170Xi4 (203 & 300 dpi)	P1006072	1
6	Kit Rewind Drive Belt for 110Xi4 600 dpi	P1006073	1
7	Kit Rewind Drive Belt for 220Xi4 (203 & 300 dpi)	P1006072	1
8	Kit Xi4 Series Rewind Drive System (includes pulleys and drive belts for all dpi)	P1006071	1

Media and Ribbon Spindles

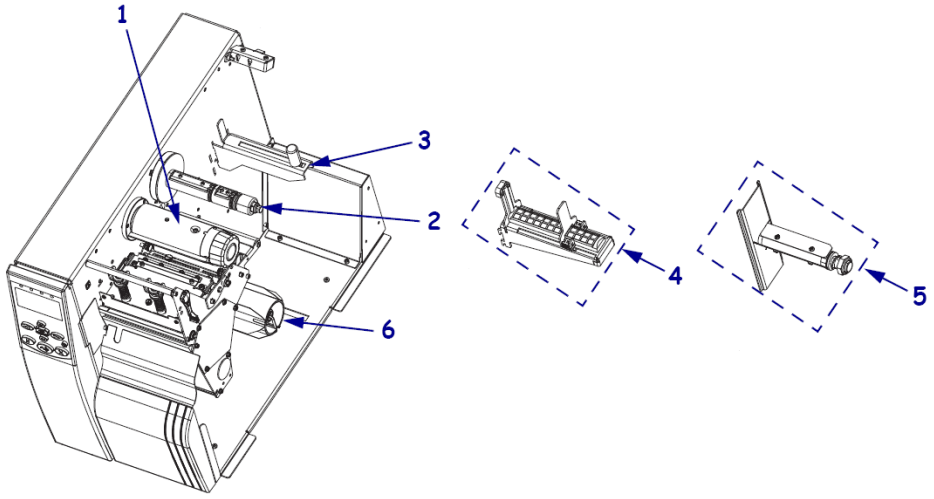

Item Number	Description	Part Number	Kit Quantity
1	Kit 110Xi4 Ribbon Take Up Spindle	G41150M	1
1	Kit 140Xi4 Ribbon Take Up Spindle	G48250	1
1	Kit 170Xi4 Ribbon Take Up Spindle	G46350	1
1	Kit 220Xi4 Ribbon Take Up Spindle	G22250	1
2	Kit 110Xi4 Ribbon Supply Spindle	P1006058	1
2	Kit 140Xi4 Ribbon Supply Spindle	P1006059	1
2	Kit 170Xi4 Ribbon Supply Spindle	P1006061	1
2	Kit 220Xi4 Ribbon Supply Spindle	P1006062	1
	Kit Xi4 Series Hardware for the Ribbon Supply Spindle (includes blades, springs, spring housing, nut, etc..)	P1006063	1
3	Kit 110Xi4 Media Supply Hanger (203 & 300 dpi) for serial numbers less than 14J111900550	P1006064	1
3	Kit 110Xi4 Media Supply Hanger (203 & 300 dpi) for serial numbers greater than 14J111900550	G45053M	1
4	Kit 140Xi4 Media Supply Hanger for serial numbers less than 15J132300394	G48153-4M	1
4	Kit 140Xi4 Media Supply Hanger for serial numbers greater than 15J132300394	P1053031	1
4	Kit 170Xi4 Media Supply Hanger for serial numbers less than 16J132400060	G46153M	1
4	Kit 170Xi4 Media Supply Hanger for serial numbers greater than 16J132400060	P1053032	1
4	Kit 220Xi4 Media Supply Hanger	G22153M	1
5	Kit 110Xi4 Media Supply Spindle 3 inch ID Media Core	G41253M	1
5	Kit 110Xi4 Media Supply Spindle 40mm ID Media Core	G41254M	1
5	Kit 140Xi4 Media Supply Spindle 3 inch ID Media Core	G48253M	1
5	Kit 140Xi4 Media Supply Spindle 40mm ID Media Core	G48044M	1
5	Kit 170Xi4 Media Supply Spindle 3 inch ID Media Core	G46253M	1
5	Kit 170Xi4 Media Supply Spindle 40mm ID Media Core	G46044M	1
5	Kit 220Xi4 Media Supply Spindle 3 inch ID Media Core	G22253M	1
6	Kit 110Xi4 Media Rewind Spindle Replacement	G41155M	1
6	Kit 140Xi4 Media Rewind Spindle Replacement	G48155M	1
6	Kit 170Xi4 Media Rewind Spindle Replacement	G46249M	1
6	Kit 220Xi4 Media Rewind Spindle Replacement	G22155M	1

Dancers – Media Guides – Ribbon Rollers

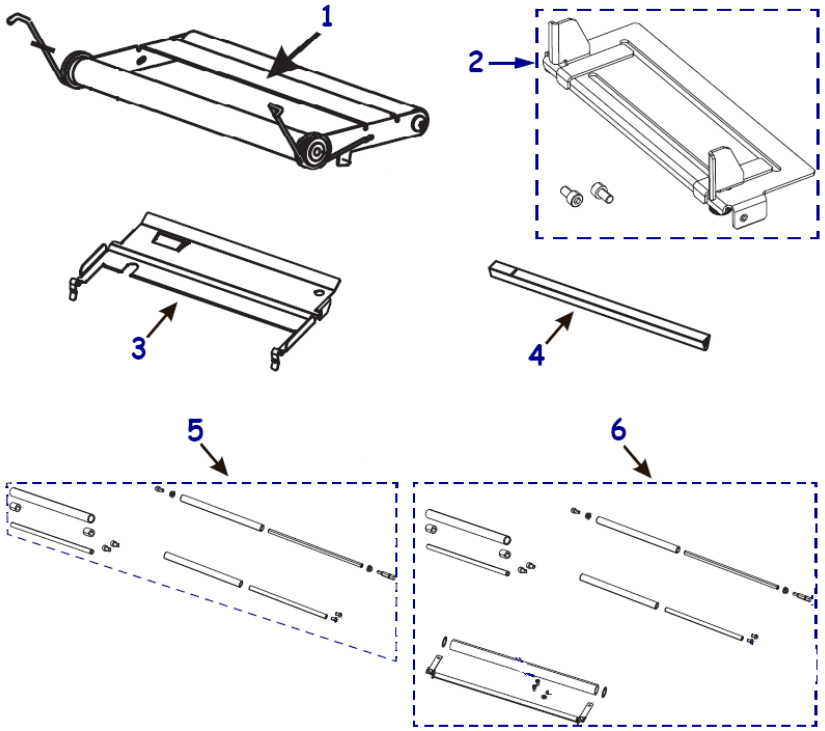

Item Number	Description	Part Number	Kit Quantity
1	Kit 110Xi4 Dancer Assembly	41691M	1
1	Kit 140Xi4 Dancer Assembly	46691-2M	1
1	Kit 170Xi4 Dancer Assembly	46691-3M	1
1	Kit 220Xi4 Dancer Assembly	22391M	1
2	Kit 110Xi4 Media Guide	P1006106	1
2	Kit 140Xi4 Media Guide	P1006107	1
2	Kit 170XI4 Media Guide	P1006108	1
2	Kit 220Xi4 Media Guide	P1006109	1
3	Kit 110Xi4 Snap Plate (Media Guide Plate)	P1006111	1
3	Kit 140Xi4 Snap Plate (Media Guide Plate)	P1006112	1
3	Kit 170Xi4 Snap Plate (Media Guide Plate)	P1006113	1
3	Kit 220Xi4 Snap Plate (Media Guide Plate)	P1006114	1
4	Kit 110Xi4 Peel Tear Bar	P1006115	1
4	Kit 140Xi4 Peel Tear Bar	P1006116	1
4	Kit 170Xi4 Peel Tear Bar	P1006117	1
4	Kit 220Xi4 Peel Tear Bar	P1006118	1
5	Kit 110Xi4 Ribbon Rollers	P1006099	1
5	Kit 140Xi4 Ribbon Rollers	P1006101	1
6	Kit 170Xi4 Ribbon Rollers for serial numbers less than 16J132400060	P1006103	1
6	Kit 170Xi4 Ribbon Rollers for serial numbers greater than 16J132400060	P1053033	1
6	Kit 220Xi4 Ribbon Rollers	P1006104	1

Media Handling Options

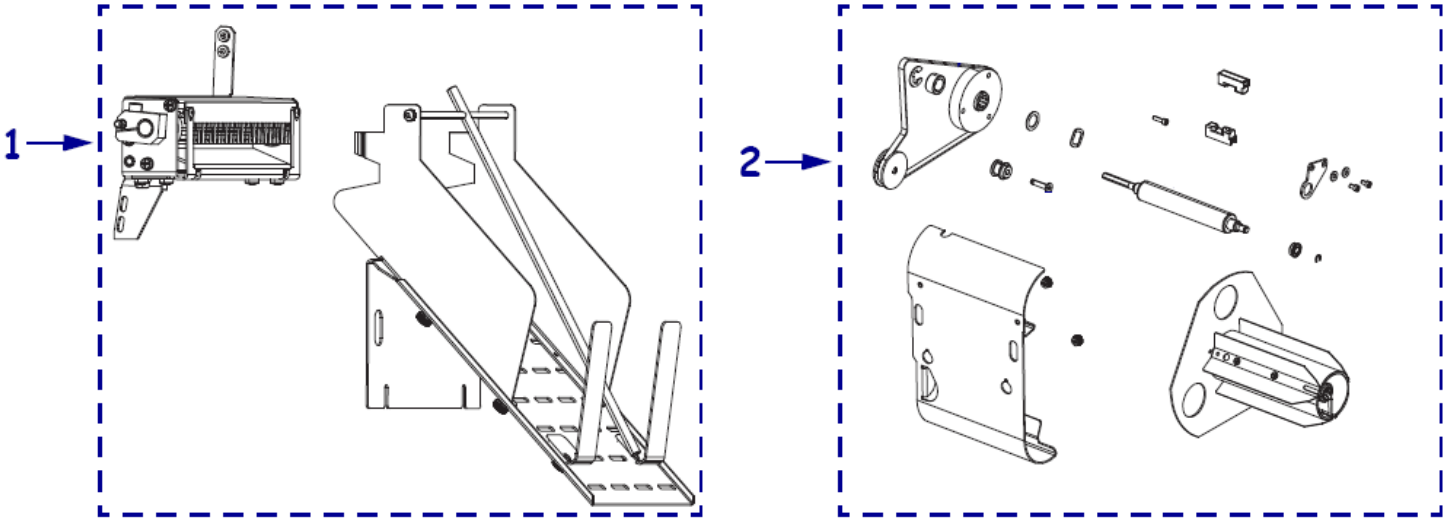

Item Number	Description	Part Number	Kit Quantity
1	Kit 110Xi4 Cutter Option	P1018252	1
1	Kit 140Xi4 Cutter Option	P1018253	1
1	Kit 170Xi4 Cutter Option	P1018255	1
1	Kit 220Xi4 Cutter Option	P1018257	1
2	Kit 110Xi4 Media Rewind Option for 203 & 300 dpi	P1008479	1
2	Kit 110Xi4 Media Rewind Option for 600 dpi	P1008480	1
2	Kit 140Xi4 Media Rewind Option for 203 dpi	P1008481	1
2	Kit 170Xi4 Media Rewind Option for 203 & 300 dpi	P1008482	1
2	Kit 220Xi4 Media Rewind Option for 203 and 300 dpi	P1008483	1

Cutter Replacement Components Common To All Xi4 Cutter Designs

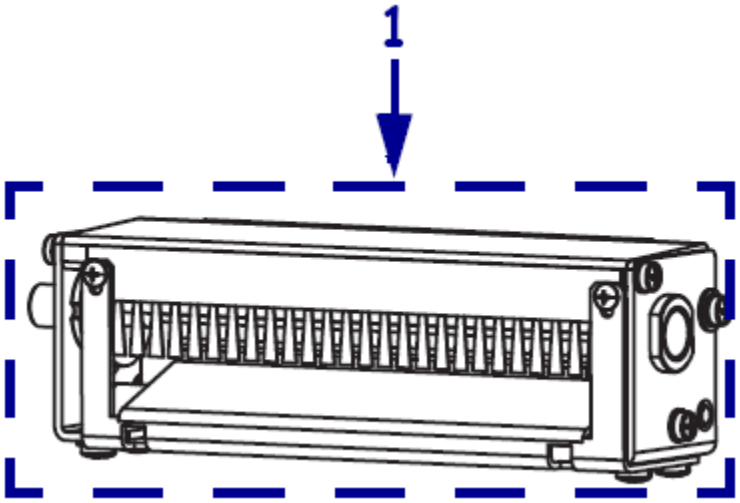

Item Number	Description	Part Number	Kit Quantity
1	Kit 110Xi4 Cutter Module	P1006082	1
1	Kit 140Xi4 Cutter Module	P1006083	1
1	Kit 170Xi4 Cutter Module	P1006084	1
1	Kit 220Xi4 Cutter Module	P1006085	1
	Kit 110Xi4 Tray for Cutter	G41387M	1
	Kit 140Xi4 Tray for Cutter	G48459	1
	Kit 170Xi4 Tray for Cutter	G46459	1
	Kit 220Xi4 Tray for Cutter	G22459	1
	Kit 110Xi4 Static Brush for Cutter	P1006086	1
	Kit 140Xi4 Static Brush for Cutter	P1006088	1
	Kit 170Xi4 Static Brush for Cutter	P1006089	1
	Kit 220Xi4 Static Brush for Cutter	P1006090	1
	Kit 110Xi4 Mounting Brackets for the Cutter	P1006091	1
	Kit 140Xi4 Mounting Brackets for the Cutter	P1006092	1
	Kit 170Xi4 Mounting Brackets for the Cutter	P1006093	1
	Kit 220Xi4 Mounting Brackets for the Cutter	P1006094	1

Cutter Replacement Components Specific To The Current Cutter Design: The parts below should only be used on printers using the square cutter drive motor. These parts are NOT compatible with printers using the round cutter motor.

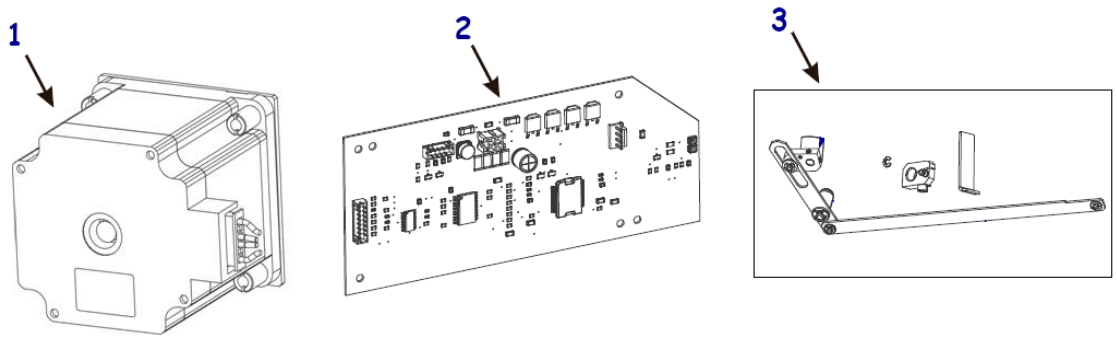

Item Number	Description	Part Number	Kit Quantity
1	Kit Xi4 Series Current Design Square Drive Motor for Cutter Option	P1018258	1
2	Kit Xi4 Series Current Design PCB with integrated sensor for Cutter Option	P1018261	1
3	Kit Xi4 Series Current Design Drive Linkage for Cutter Option for: 110Xi4: SN<14J111900550 140Xi4: SN<15J132300394 170Xi4: SN<16J132400060 All 220Xi4 printers regardless of serial number	P1018259	1
3	Kit Xi4 Series Current Design Drive Linkage for Cutter Option for: 110Xi4: SN>14J111900550 140Xi4: SN>15J132300394 170Xi4: SN>16J132400060	P1053038	1

Cutter Replacement Components Specific To The Old Cutter Design: The parts below should only be used on printers using the round cutter drive motor. These parts are NOT compatible with printers using the square cutter motor.

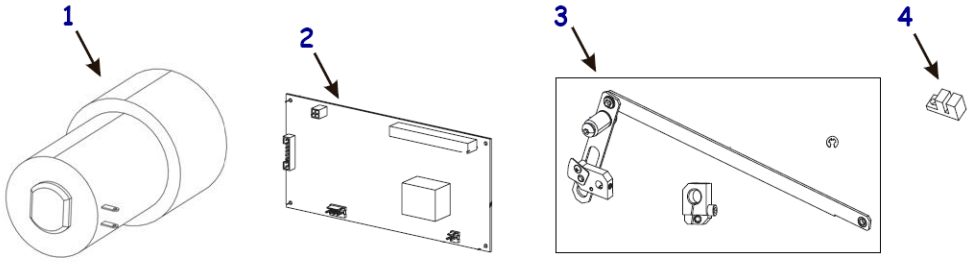

Item Number	Description	Part Number	Kit Quantity
1	Kit Replacement for Discontinued Old Design Round Cutter Drive Motor	P1034326	1
2	Kit Xi4 Series Old Design PCB for Cutter Option	P1006160	1
3	Kit Xi4 Series Old Design Drive Linkage for Cutter Option	P1006081	1
4	Kit Xi4 Series Old Design Sensor for Cutter Option	G46618M	1

Media Rewind Replacement Components

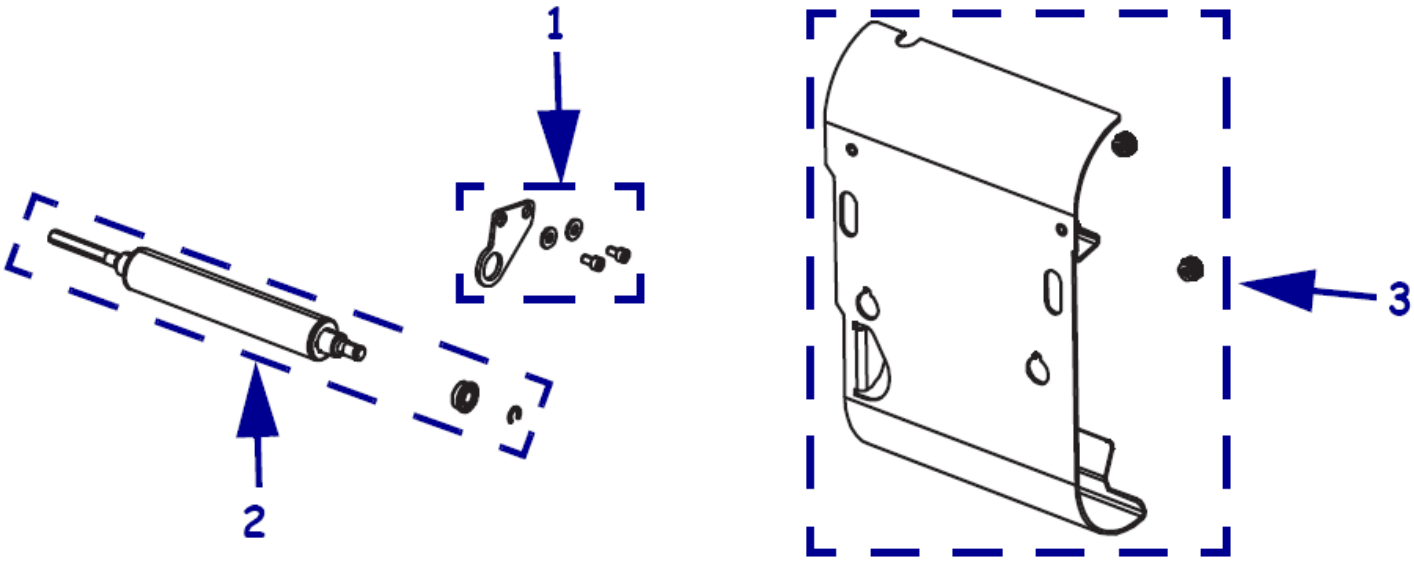

Item Number	Description	Part Number	Kit Quantity
1	Kit Xi4 Series Rewind Roller Adjustment Plate	P1006105	1
2	Kit 110Xi4 Rewind Roller 203 dpi & 300 dpi	G41011M	1
2	Kit 110Xi4 Rewind Roller 600 dpi	P1004592	1
2	Kit 140Xi4 Rewind Roller 203 dpi	G40038M	1
2	Kit 170Xi4 Rewind Roller 203 dpi & 300 dpi	G46278M	1
2	Kit 220Xi4 Rewind Roller 203 dpi and 300 dpi	G22101M	1
3	Kit 110Xi4 Media Rewind Plate	G41383M	1
3	Kit 140Xi4 Media Rewind Plate to be used with Tear/Peel option	G48383M	1
3	Kit 140Xi4 Media Rewind Plate to be used with Cutter option	G40382RM	1
3	Kit 170Xi4 Media Rewind Plate to be used with Tear/Peel option	G46383M	1
3	Kit 170Xi4 Media Rewind Plate to be used with Cutter option	G46382M	1
3	Kit 220Xi4 Media Rewind Plate to be used with Tear/Peel option	G22383M	1
3	Kit 220Xi4 Media Rewind Plate to be used with Cutter option	G22382M	1
	Kit 110Xi4 J Hook (2 pack)	P1006121	2
	Kit 140Xi4 J Hook (2 pack)	P1006122	2
	Kit 170Xi4 J Hook (2 pack)	P1006123	2
	Kit 220Xi4 J Hook (2 pack)	P1006124	2

Covers for Option and Access Holes

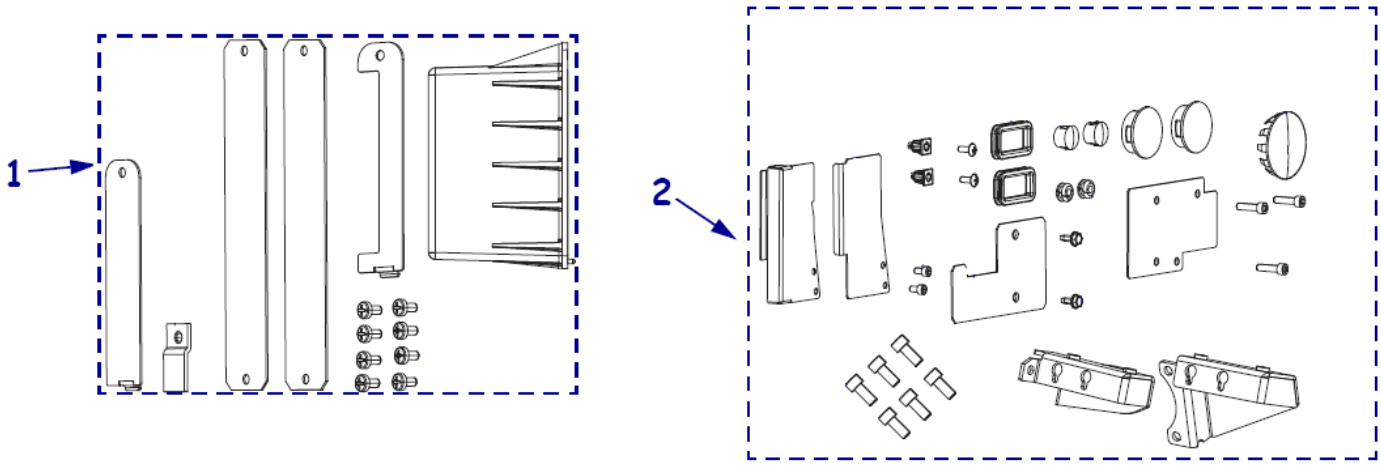

Item Number	Description	Part Number	Kit Quantity
1	Kit Xi4 Series Covers for electronic options	P1006120	1
2	Kit Xi4 Series Covers for option holes, access holes, sensor brackets, etc..	P1006119	1

Packing Materials for Printer Shipping

Item Number	Description	Part Number	Kit Quantity
	Kit 110Xi4 Packaging Material Qty of 1	P1023445	1
	Kit 110Xi4 Packaging Material Qty of 8	P1023461	8
	Kit 140Xi4 Packaging Material Qty of 1	P1023462	1
	Kit 140Xi4 Packaging Material Qty of 8	P1023463	8
	Kit 170Xi4 Packaging Material Qty of 1	P1023464	1
	Kit 170Xi4 Packaging Material Qty of 8	P1023465	8
	Kit 220Xi4 Packaging Material Qty of 1	P1023466	1
	Kit 220Xi4 Packaging Material Qty of 8	P1023467	8

Hardware

Item Number	Description	Part Number	Kit Quantity
	Cable Clamp 0.312" dia, Qty. of 25	HW01117	25
	Cable Clamp 0.500" dia, Qty of 25	HW06222	25
	Nut 6-32, Qty of 25	HW33809	25
	Nut 4-40 R S Zn Hx Elwash, Qty of 25	HW33823	25
	Crescent Ring Ext .250 Yel, Qty of 100	HW33810	100
	Screw 4-40 x .31, Qty of 25	HW78802	25
	Screw M4 x .7 x 5 Pn Ph Blk, Qty of 25	HW33826	25
	Bearing .500 x .252 x .250, Qty of 10	HW30198	10
	Bearing .375 x .189 x .125, Qty of 25	HW30199	25
	Washer Flt .564 x .384 x .060, Qty of 10	HW33806	10
	Screw 4-40 x .25 Tr Ph S, Qty of 25	HW32332	25
	Stop Head Lift Spring, Qty of 10	HW30266	10
	Washer .32 x .119 x .062 Neo Bl, Qty of 25	HW30494	25
	Plug Hole, Qty of 25	HW30826	25
	Washer Flt .207 x .146 x .030, Qty of 10	HW30956	10
	Washer .50 x .25 x .031, Qty of 25	HW43974	25
	Rubber Grommet 1.25 x .62 x .105, Qty of 10	HW46091	10
	Hole Plug, Qty of 25	HW46267	25
	Scrw 10-32 .312 Cp So H Bo, Qty of 25	HW30394-005	25
	Screw 1/4 x 20 x .38 Bu So H Bo, Qty of 25	HW30405-006	25
	Screw 4-40 x .375, Qty of 25	HW30406-006	25
	Screw 6-32 x 0.5, Qty of 25	HW30407-008	25
	Screw 6-32 0.37, Qty of 25	HW32413-006	25
	Screw 6-32 x .750, Qty of 25	HW32413-012	25
	Screw 4-40 3/16, Qty of 100	HW46882-003	100
	FUSE 5.00 SB 250V 3A, Qty of 25	HW49616-5.0	25
	Screw M4 x .7 x 10, Qty of 100	HWQ10011	100
	Ring E Ext .250, Qty of 100	HWQ10019	100
	Screw, 6-32 .125, Qty of 25	HW33828	25
	Screw, 8-32 .250, Qty of 25	HW33812-004	25
	Plate Washer, Qty of 10	HW32352	10
	Cvd Washer .344 x .172 x .006, Qty of 25	HW40194	25
	Head Open Flag, set of 50	HW46352	50
	Round Bumper Foot Qty of 25	HW33844	25