BFS 1222.1

12NC: F083834

GTIN (EAN) code: 8007842838343



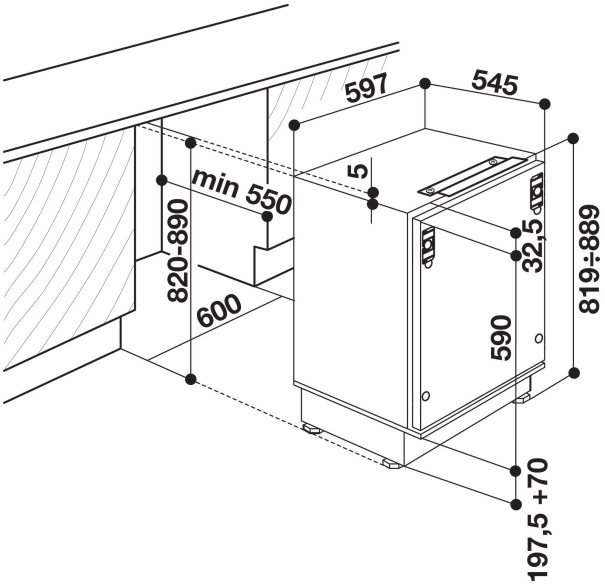

MAIN FEATURES

Product group	Freezer
Commercial code	BFS 1222.1
GTIN (EAN) code	8007842838343
Construction type	built-in
Installation type	Built-in
Type of control	Mechanical
Main colour of product	Steel
Electrical connection rating (W)	110
Current (A)	16
Voltage (V)	220-240
Frequency (Hz)	50
Length of Electrical Supply Cord (cm)	245
Plug type	Schuko
Total unit net capacity (l)	91
Height of the product	815
Width of the product	596
Depth of the product	545
Maximum adjustability feet	0
Net weight (kg)	35
Gross weight (kg)	35.8
Door hinge	-

TECHNICAL FEATURES

Defrost process	Manual
Fast freezing function	No
Refrigerator section with thaw water drainage system	No
Number of drawers/baskets	3
Lockable door	No
Thermometer freezer section	None
Interior light	-

PERFORMANCES

Energy efficiency class - NEW (2010/30/EU)	A+
Freezing capacity (kg/24h) - NEW (2010/30/EU)	10
Temperature rise time (h)	27
Climate class	SN-T
Frost free system	No
Freezer Net capacity (l) - NEW (2010/30/EU)	91