34101/**/16

Gebruiksaanwijzing
Notice d'emploi
Benutzerhandbuch
User manual
Manual de usuario



PHILIPS

Incl.

A

B

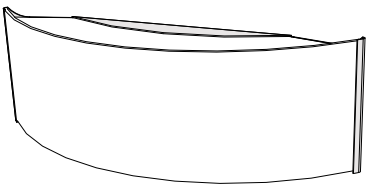

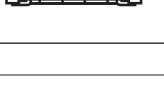
Ø 6mm

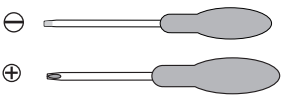

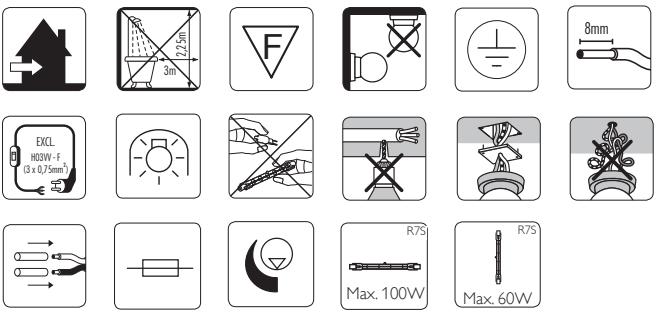
2,25m
3m
F
8mm
EXCL.
H03VV - F
(3 x 0,75mm²)
R7S
Max. 100W
R7S
Max. 60W

B

Type 1 p.4

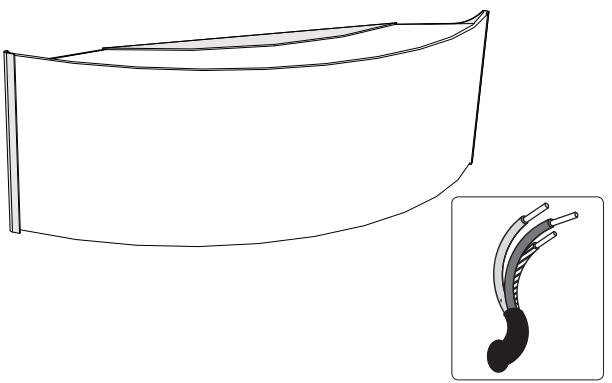

Type 2 P. 10

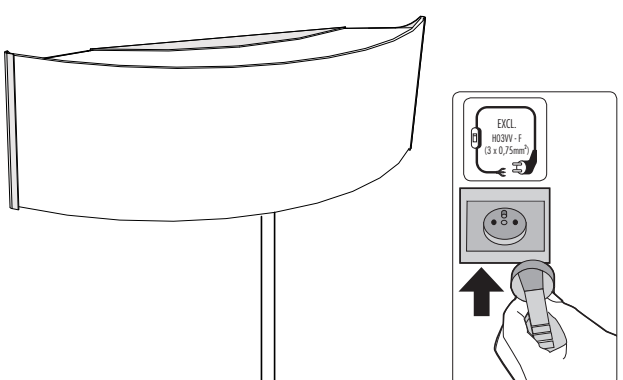

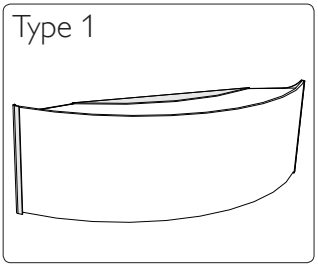
Type 1

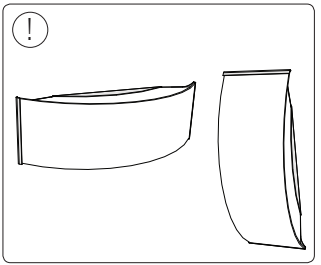
!

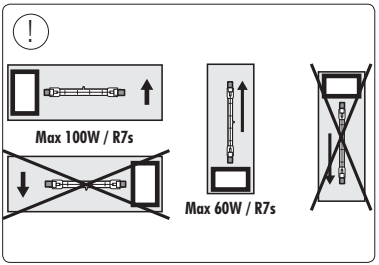
!
Max 100W / R7s
Max 60W / R7s

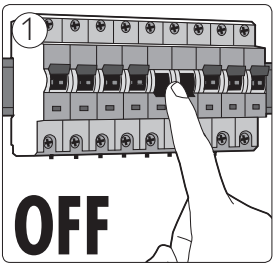
1
OFF

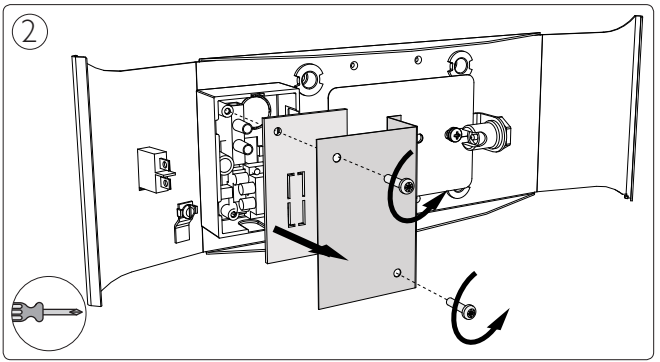
2

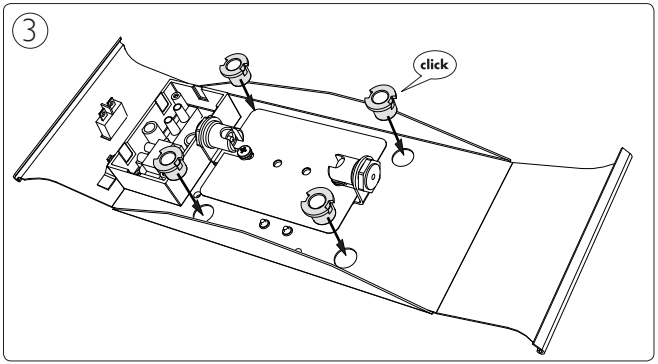
3
click

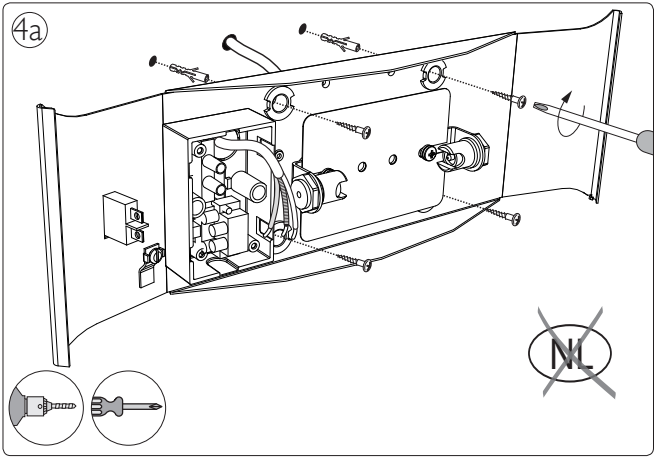
4a
NL

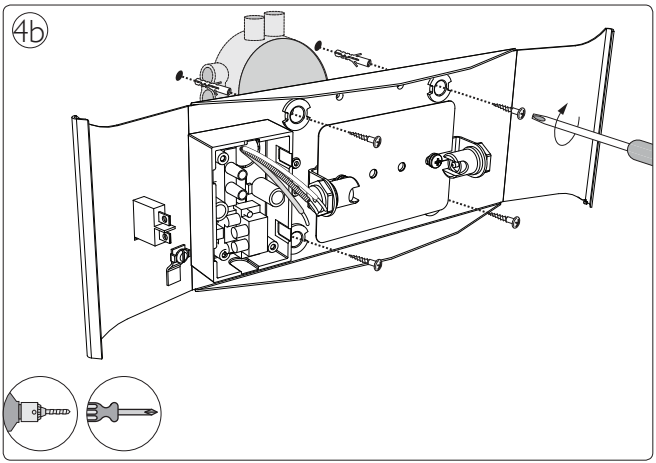
4b

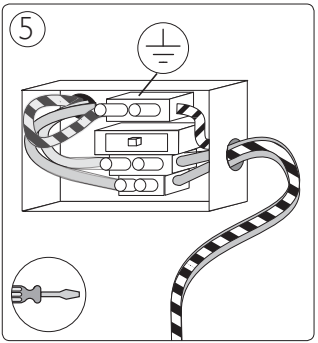
5

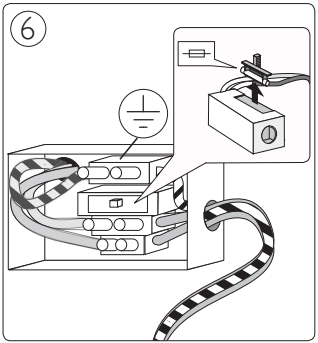
6

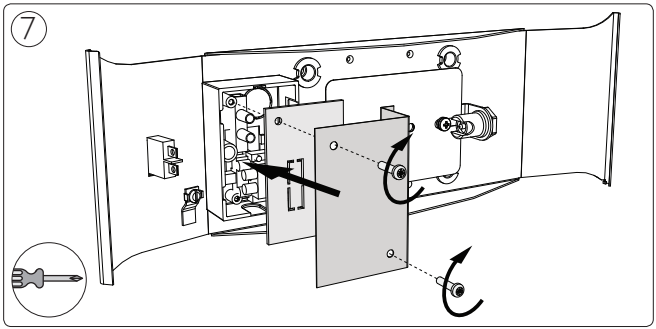
7

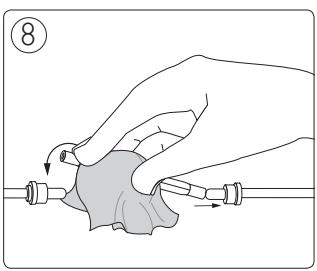
8

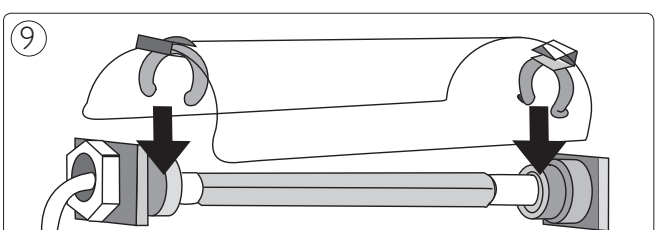
9

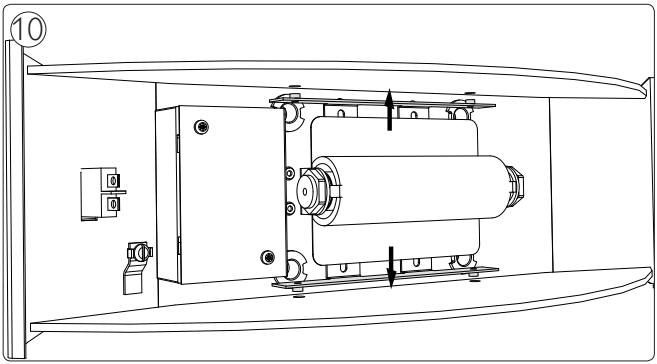
10

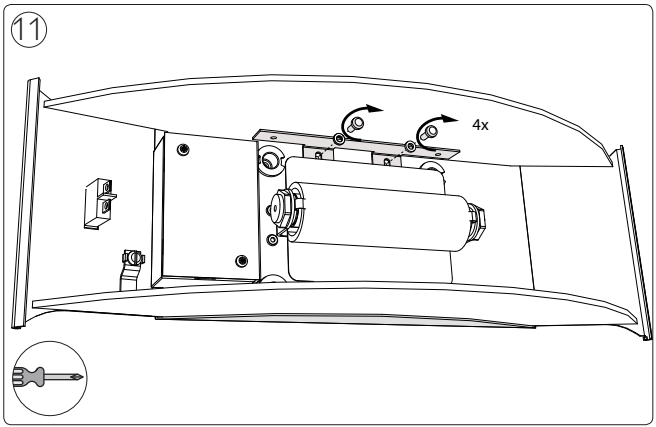
11
4x

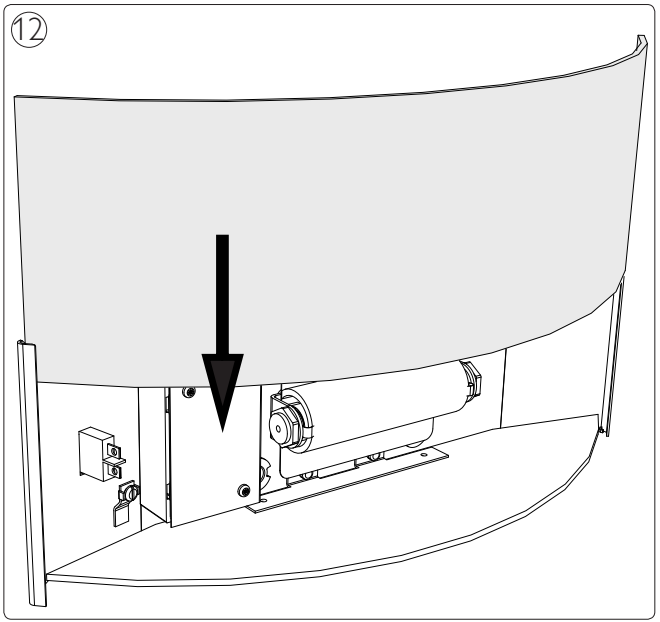
12

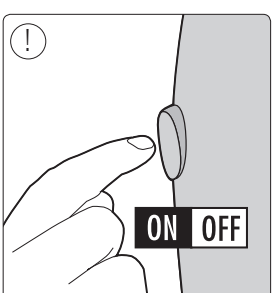
!
ON
OFF

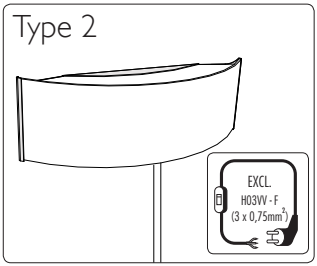
Type 2
EXCL.
H03VV - F
(3 x 0,75mm²)

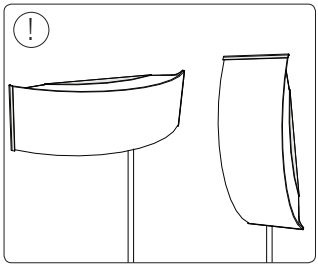
!

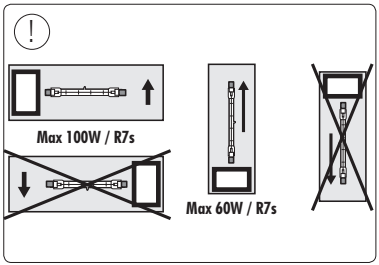
!
Max 100W / R7s
Max 60W / R7s

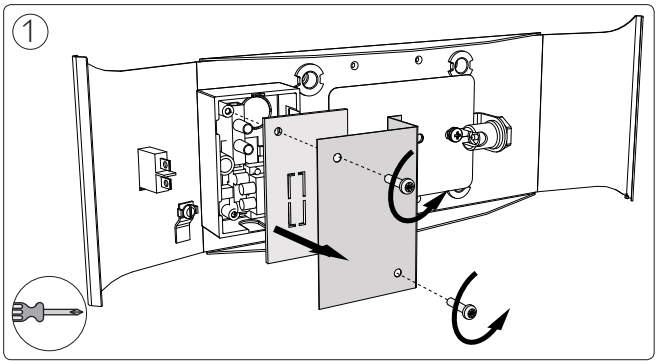
1

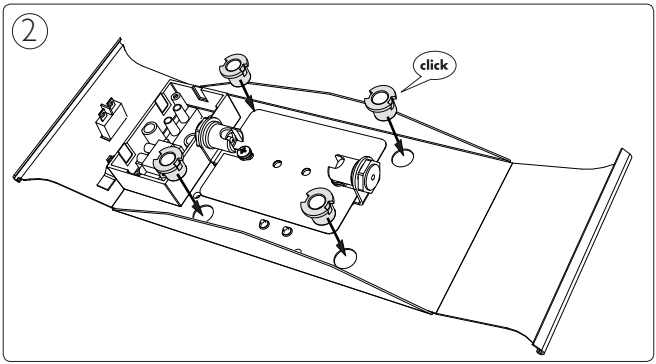
2
click

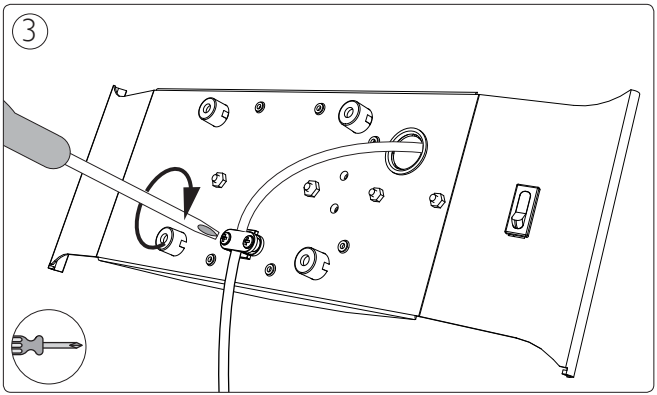
3

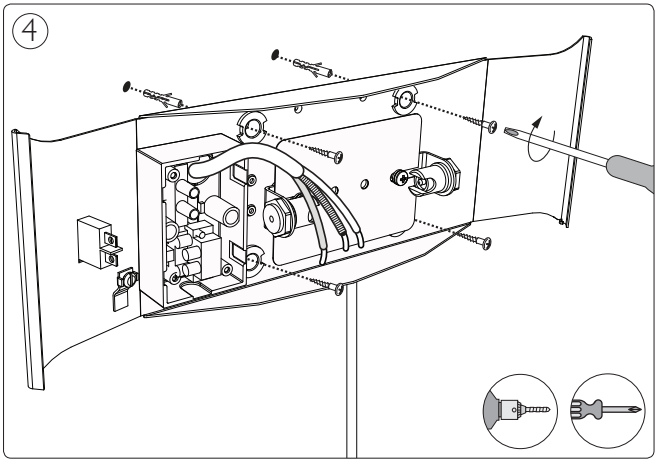
4

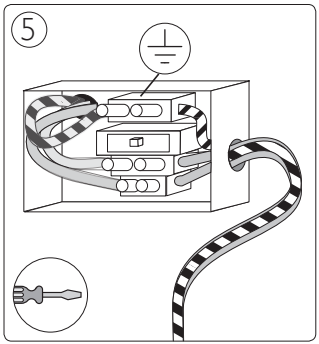
5

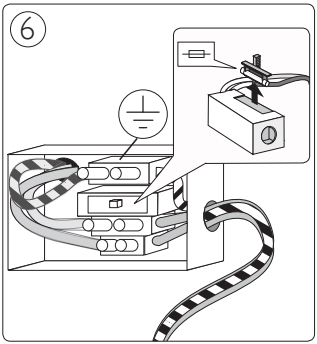
6

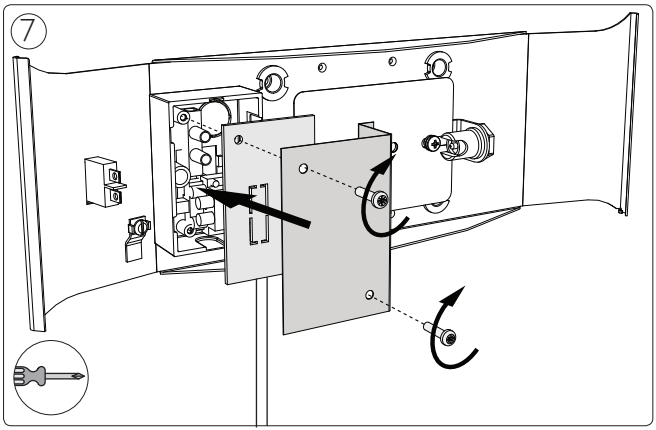
7

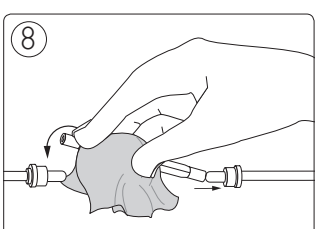
8

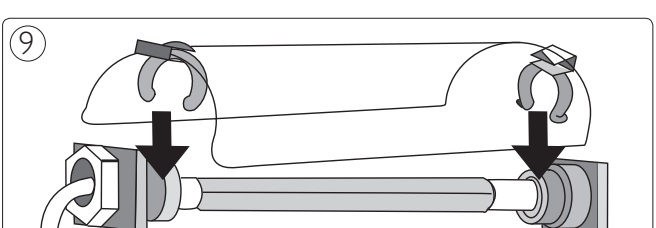
9

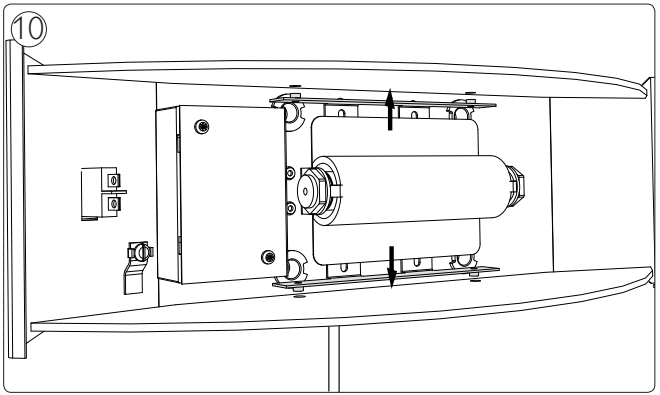
10

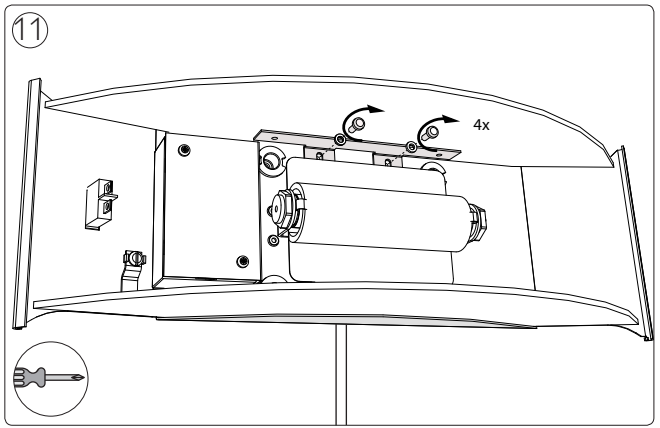
11
4x

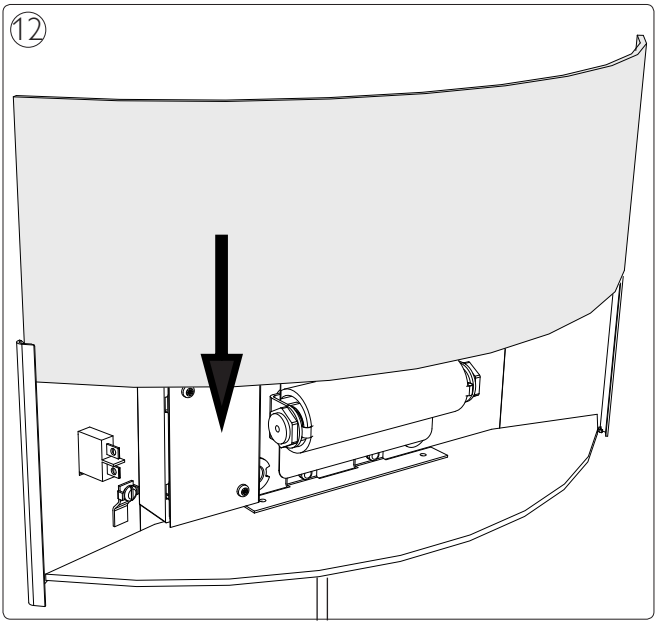
12

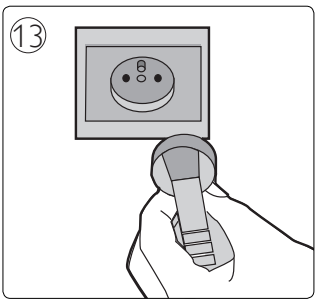
13

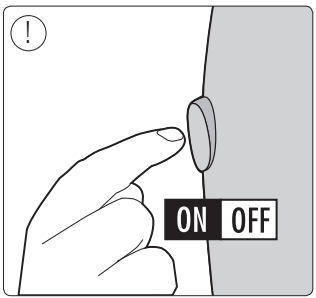
!
ON
OFF



Philips Lighting Contact Centre
Int. Business Reply Service
I.B.R.S. / C.C.R.I. Numéro 10461
5600 VB Eindhoven
Pays-Bas / The Netherlands

www.philips.com/homelighting
☎+800 7445 4775

4404.018.34061
Last update: 07/11/12