User Guide

ThinkPad Compact USB Keyboard with TrackPoint and ThinkPad Compact Bluetooth Keyboard with TrackPoint

http://www.lenovo.com/safety

Note: Before installing the product, be sure to read the warranty information in Appendix B “Lenovo Limited Warranty” on page 29.

Fourth Edition (June 2015)

© Copyright Lenovo 2013, 2015.

LIMITED AND RESTRICTED RIGHTS NOTICE: If data or software is delivered pursuant a General Services Administration “GSA” contract, use, reproduction, or disclosure is subject to restrictions set forth in Contract No. GS-35F-05925.

Contents

Chapter 1. About the user guide 1

Chapter 2. ThinkPad Compact USB Keyboard with TrackPoint 3

Product description 3
- Front view 3
- Rear view 4

System requirements 4

Installing the USB keyboard 5

Installing the device driver on Windows operating systems 5

Uninstalling the device driver from Windows operating systems 5

Using the USB keyboard 6
- Using the TrackPoint 6
- Replacing the pointing stick cap 7
- Changing the pointing stick sensitivity 7
- Using the ThinkPad preferred scrolling function 7
- Using the function keys 7

Troubleshooting 9

Product specifications 12

Chapter 3. ThinkPad Compact Bluetooth Keyboard with TrackPoint 13

Product description 13
- Front view 13
- Rear view 14

System requirements 15

Pairing the Bluetooth keyboard with the computer 15

Installing the device driver on Windows operating systems 17

Uninstalling the device driver from Windows operating systems 18

Using the Bluetooth keyboard 19
- Using the TrackPoint 19
- Replacing the pointing stick cap 19
- Changing the pointing stick sensitivity . . . 19
- Using the ThinkPad preferred scrolling function 20
- Charging the Bluetooth keyboard 20
- Using the function key 20

Troubleshooting 22

Product specifications 25

Appendix A. Service and Support . . . 27

Online technical support 27

Telephone technical support 27

Accessibility information 27

Appendix B. Lenovo Limited Warranty 29

Part 1 - General Terms 29

Part 2 - Country-specific Terms 32

Part 3 - Warranty Service Information 34

Suplemento de Garantía para México 35

Appendix C. Electronic emission notices 37

Federal Communications Commission Declaration of Conformity 37

Appendix D. Notices 41

Recycling information 41

Recycling information for China 41

Recycling information for Brazil 42

Important WEEE information 42

Export Classification Notice 42

Trademarks 42

Appendix E. Restriction of Hazardous Substances Directive (RoHS) 45

European Union RoHS 45

China RoHS 45

Turkish RoHS 45

Ukraine RoHS 45

India RoHS 46

© Copyright Lenovo 2013, 2015

Chapter 1. About the user guide

This user guide contains product descriptions and instructions for installing and using the following products:

- ThinkPad® Compact USB Keyboard with TrackPoint®
- ThinkPad Compact Bluetooth Keyboard with TrackPoint

© Copyright Lenovo 2013, 2015

Chapter 2. ThinkPad Compact USB Keyboard with TrackPoint

This chapter provides information about the ThinkPad Compact USB Keyboard with TrackPoint (hereafter called the USB keyboard).

The USB keyboard has the following features:

- A smart size saves your desk space
- An integrated TrackPoint consisting of a pointing stick and three click buttons eliminates the needs for an external mouse
- Function keys provide shortcuts for some common computer functions

The option package includes:

- ThinkPad Compact USB Keyboard with TrackPoint
- Setup and warranty poster
- Cable

Product description

This topic provides a general description of the USB keyboard.

Front view

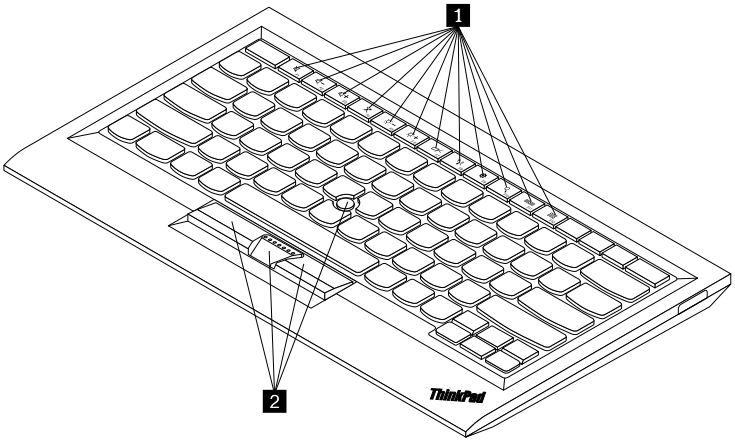

Figure 1. Front view of the USB keyboard

1 Hot keys

Used as shortcuts for some common computer functions. For more information, see “Using the Fn functions” on page 7.

2 TrackPoint

The TrackPoint consists of a pointing stick and three click buttons. For more information, see “ “Using the TrackPoint” on page 6.

© Copyright Lenovo 2013, 2015

Rear view

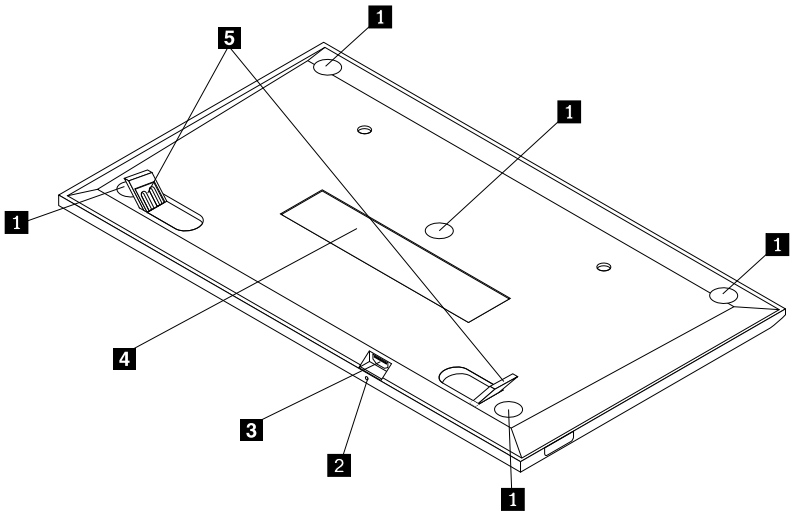

Figure 2. Rear view of the USB keyboard

1 Non-skid feet

Used to prevent the USB keyboard from unexpected moving.

2 Status indicator

When the USB keyboard is successfully connected with the computer, the status indicator is solid on.

3 Micro USB connector

Used to connect the USB keyboard to a computer. For more information, see “Installing the USB keyboard” on page 5.

4 Identification label

Contains the part number, version number, and some other product information.

5 Tilt feet

Used to adjust the angle of the keyboard to provide comfort.

System requirements

Before installing the USB keyboard, ensure that your computer meets the following requirements:

- There is an available USB connector on your computer.
- Your computer has one of the following operating systems installed:
  - Microsoft® Windows® XP (32-bit)
  - Microsoft Windows Vista (32-bit or 64-bit)
  - Microsoft Windows 7 (32-bit or 64-bit)
  - Microsoft Windows 8 (32-bit or 64–bit)

- Microsoft Windows 8.1 (32-bit or 64–bit)
- Microsoft Windows 10 (32-bit or 64-bit)

Before installing the USB keyboard, it is recommended that you check the Lenovo® Support Web site for the latest software updates, including updated basic input/output system code (BIOS), utility programs, device drivers, and other software updates. You can find the Lenovo Support Web site at: http://www.lenovo.com/support

You are responsible for downloading and installing designated software updates from the Support Web site or other electronic media, and following the instructions provided by your Service Provider.

Installing the USB keyboard

To install the USB keyboard, do the following:

1. Adjust the tilt feet to set the keyboard near your computer to your preference.
2. Connect the provided cable to an available USB connector on your computer. After the operating system identifies the USB keyboard, the status indicator on the USB keyboard turns on. The USB keyboard is ready for use.

Note: It is recommended that you install the USB keyboard before the ThinkPad Compact Keyboard with TrackPoint driver (hereafter called the ThinkPad Keyboard Suite).

Installing the device driver on Windows operating systems

It is recommended that you install the ThinkPad Keyboard Suite to customize advanced settings before you use the USB keyboard.

If you are using the Windows 7, Windows 8, Windows 8.1, or Windows 10 operating system, and your computer is connected to the Internet, when you connect the USB keyboard to your computer for the first time, a message will be displayed asking if you want to install the ThinkPad Keyboard Suite. Click **Download Now** and the ThinkPad Keyboard Suite will be automatically installed. If the message is not displayed, manually install the ThinkPad Keyboard Suite by doing the following:

1. Go to http://support.lenovo.com/tpkeyboard.
2. Locate and download the installation file of the ThinkPad Keyboard Suite.
3. Double-click the installation file, and then follow the instructions on the screen to complete the installation.
4. Restart the computer.

Uninstalling the device driver from Windows operating systems

To uninstall the ThinkPad Keyboard Suite from the Windows XP, Windows Vista, Windows 7, Windows 8, Windows 8.1, or Windows 10 operating system, do the following:

For the Windows XP operating system:

1. Click **Start** → **Control Panel** or **Start** → **Settings** → **Control Panel**.
2. Depending on your Control Panel mode, click or double-click **Add or Remove Programs** .
3. Click **ThinkPad Compact Keyboard with TrackPoint driver**, and then click **Remove**.
4. Follow the instructions on the screen.

For the Windows Vista or Windows 7 operating system:

1. Click **Start** → **Control Panel** or **Start** → **Settings** → **Control Panel**.
2. Depending on your Control Panel mode, do one of the following:
   - Click the **Uninstall a program** option under the **Programs** menu.
   - Click **Programs and Features**.
3. Select **ThinkPad Compact Keyboard with TrackPoint driver** and then right-click your mouse. The **Uninstall/Change** option is displayed.
4. Click **Uninstall/Change**.
5. Follow the instructions on the screen.

For the Windows 8 or Windows 8.1 operating system:

1. To go to Control Panel, move the pointer to the top-right or bottom-right corner of the screen to display the charms. Click **Search** and then search for Control Panel.
2. Depending on your Control Panel mode, do one of the following:
   - Click the **Uninstall a program** option under the **Programs** menu.
   - Click **Programs and Features**.
3. Select **ThinkPad Compact Keyboard with TrackPoint driver** and then right-click your mouse. The **Uninstall** option is displayed.
4. Click **Uninstall**.
5. Follow the instructions on the screen to uninstall the device driver.

For the Windows 10 operating system:

1. From the desktop, move the pointer to bottom-left corner of the screen, and then search **Control Panel** in the search box.
2. Depending on your Control Panel mode, do one of the following:
   - Click the **Uninstall a program** option under the **Programs** menu.
   - Click **Programs and Features**.
3. Select **ThinkPad Compact Keyboard with TrackPoint driver** and then right-click your mouse. The **Uninstall** option is displayed.
4. Click **Uninstall**.
5. Follow the instructions on the screen to uninstall the device driver.

Using the USB keyboard

This chapter provides information about using the USB keyboard.

Using the TrackPoint

The TrackPoint consists of a pointing stick and three click buttons. The pointing stick is used to control the cursor. The three click buttons are the left button, the right button, and the middle button.

To use the pointing stick, do the following:

1. Place your hands at typing position, and press gently on the pointing stick in the direction that you want the cursor to move. You can press the pointing stick away from you to move the cursor up, toward you to move the cursor down, to one side or the other to move the cursor sideways. The speed at which the cursor moves depends on the pressure you apply to the pointing stick.

Note: The cursor might periodically drift. Stop using the pointing stick for a few seconds and try again. The cursor will work normally.

2. To select an item, stop the pointing stick when the cursor locates the item and press the left or right button with your thumb. The left and right buttons function the same as the left and right buttons on a conventional mouse.

Replacing the pointing stick cap

The cap on top of the pointing stick is removable. You can buy appropriate caps from Lenovo to replace your current cap.

To remove the cap on the pointing stick, simply grasp the top portion of the cap and pull it up. To install a new cap, align the square at the bottom of the cap with the pointing stick and push down until the cap seats into position.

Changing the pointing stick sensitivity

When you are using the pointing stick, you might prefer to use a light touch, or you might want to apply more pressure. You can change the way the pointing stick responds to your touch by doing the following:

1. Click the **ThinkPad Compact Keyboard with TrackPoint** icon on the system tray.
2. In the Mouse Properties window, click **External Keyboard** tab.
3. In the **Pointer speed** area, move the slider toward **Slow** or **Fast** according to your preference.
4. Click **Apply**. Then, test how the pointing stick responds to your new setting and make adjustments if necessary.
5. Click **OK** to apply the setting.

Using the ThinkPad preferred scrolling function

You can scroll through an active window by moving the pointing stick while pressing the middle button. You also can scroll through an inactive window with the ThinkPad Preferred Scrolling function. To configure the scrolling function, do the following:

1. Click the **ThinkPad Compact Keyboard with TrackPoint** icon on the system tray.
2. In the Mouse Properties window, click the **External Keyboard** tab.
3. Depending on your needs, do one of the following:
   - To scroll through active windows just as a conventional mouse, clear **ThinkPad Preferred Scrolling**.
   - To scroll through inactive windows, select **ThinkPad Preferred Scrolling**.
4. Click **OK**.

Note: If you find it can not scroll on some applications, clear **ThinkPad Preferred Scrolling** to get more compliance.

Using the function keys

The following table describes the function keys and Fn key combinations. By default, the USB keyboard acts the standard F1-F12 function. After installing the ThinkPad Keyboard Suite, you can achieve the hotkey function by pressing Fn+F*x* (where *x* represents 1 to 12) keys.

Function key	Function
Fn+Esc	Switch between the hot key and the standard F1-F12 function.
	Mute the speaker.
	Decrease the volume.
	Increase the volume.
	Mute the microphone. **Note:** This function key might not work on the Windows XP and Windows Vista operating systems.
	Decrease the brightness. **Note:** This function key might not work on the Windows XP and Windows Vista operating systems.
	Increase the brightness. **Note:** This function key might not work on the Windows XP and Windows Vista operating systems.
	Switch between the computer display and an external monitor (Windows will show these display options). **Note:** This function key might not work on the Windows XP and Windows Vista operating systems.
	Enable or disable the built-in wireless networking features. **Note:** This function key might not work on the Windows XP and Windows Vista operating systems.
	• Open Control Panel. • Open Settings Panel (for the Windows 8 and Windows 8.1 operating systems). • Open the Settings window (for the Windows 10 operating system).
	• Navigate to search depending on your active applications. • Open Search Panel (for the Windows 8 and Windows 8.1 operating systems). • Open the Cortana search box (for the Windows 10 operating system).
	• View open applications. • Switch between open applications (for the Windows XP operating system).
	• Open **My Computer**. • View all applications (for the Windows 8, Windows 8.1, and Windows 10 operating systems).

If the Fn key combinations do not work correctly on some ThinkPad computers with the Windows XP operating system, ensure that the computer has the latest version of the Lenovo System Interface driver or the hotkey utility driver installed.

The most up-to-date software and device drivers for your ThinkPad computer are always available for download at:
http://www.lenovo.com/support

Notes:

- Ensure that the Fn key combinations are functional on the keyboard of your ThinkPad computer. There are software dependencies to get the most complete Fn key combination support for your ThinkPad computer.
- Most of the Fn key combinations do not work with the ThinkPad SL series notebook computers, Lenovo desktop computers, and computers from other manufacturers.
- Some Fn key combinations have different functions on different ThinkPad computer models.
- On the Windows 8, Windows 8.1, and Windows 10 operating systems, when you press Fn+Esc, hotkey F4, or the CapsLock key for the first time, an On Screen Display window might be displayed. If you want to show the on screen display, click **OK**. If you do not want to show the on screen display, click **No, thank you**. To change the on screen display setting, click the **External Keyboard** tab in the Mouse Property window, select **On Screen Displays**. When the box before **On Screen Displays** is in grey, it means that the USB keyboard follows the system default setting, you can change the system setting by clicking **Advanced OSD setting**.

For more information about the Fn key combinations, refer to the Access Help information system that comes with the ThinkPad computer.

Troubleshooting

This chapter contains troubleshooting information for the USB keyboard.

Problem: All or some of the Fn function key combinations or function keys do not work.

Solution: Read the following for solutions or explanations:

- Ensure that you have correctly installed the ThinkPad Keyboard Suite.
- Ensure that all the Fn function key combinations are functional on the keyboard of your ThinkPad computer. There are software dependencies to get the most complete Fn key and hot key combination support for your ThinkPad computer. You can get more detailed information about the Fn function key combinations from the documentation that comes with your ThinkPad computer. You might need to download the updated software components for your ThinkPad computer at:
  http://www.lenovo.com/support
- The Fn function key combinations work with all the ThinkPad computers except ThinkPad SL series notebook computers. Most of the Fn function key combinations do not work with ThinkPad SL series notebook computers, Lenovo desktop computers, or computers from other manufacturers.
- It is normal if you found some of the Fn function key combinations act differently on different ThinkPad computer models due to the differences of the applications installed on your notebook computers.
- Some function keys are not supported depending on your operating system and computer.

Problem: The TrackPoint cursor drifts when the computer is turned on or after the computer resumes normal operation.

Solution: The cursor might drift when you are not using the TrackPoint during normal operation. This is a normal feature of the TrackPoint and is not a defect. Cursor drifting might occur for several seconds under the following conditions:

- The computer is turned on.
- The computer resumes normal operation.
- The TrackPoint pointing stick is kept pressed for a long time.
- The temperature changes.

To solve the problem, you can try reconnecting the USB keyboard or restart your computer.

Problem: I pressed a button once, but the computer responded as if I pressed it twice.

Solution: Depending on your operating system, adjust the keyboard repeat delay or repeat rate settings by doing one of the following:

- For the Windows XP or Windows Vista operating system:
  1. Depending on your **Start** menu mode, click **Start → Control Panel** or **Start → Settings → Control Panel**
  2. Depending on your Control Panel mode, click or double-click **Keyboard**.
  3. Click the **Speed** tab.
  4. Move the Repeat delay slider to **Long** or the Repeat rate slider to **Slow**.
  5. Click **OK**.

  .
- For the Windows 7 operating system:
  1. Depending on your **Start** menu mode, click **Start → Control Panel** or **Start → Settings → Control Panel**
  2. Click the **View by** menu and select **Small icons** or **Large icons**. The **All Control Panel Items** category is expanded.
  3. Click **Keyboard**.
  4. Click the **Speed** tab.
  5. Move the Repeat delay slider to **Long** or the Repeat rate slider to **Slow**.
  6. Click **OK**.
- For the Windows 8 or Windows 8.1 operating system:
  1. To go to Control Panel, move the pointer to the top-right or bottom-right corner of the screen to display the charms. Click **Search** and then search for Control Panel.
  2. Click the **View by** menu and select the **Small icons** or **Large icons** view. The **All Control Panel Items** category is expanded.
  3. Click **Keyboard**.
  4. Click the **Speed** tab.
  5. Move the Repeat delay slider to **Long** or the Repeat rate slider to **Slow**.
  6. Click **OK**.

For the Windows 10 operating system:

1. From the desktop, move the pointer to bottom-left corner of the screen, and then search **Control Panel** in the search box.
2. Click the **View by** menu and select the **Small icons** or **Large icons** view. The **All Control Panel Items** category is expanded.
3. Click **Keyboard**.
4. Click the **Speed** tab.
5. Move the Repeat delay slider to **Long** or the Repeat rate slider to **Slow**.
6. Click **OK**.

Problem: The ThinkPad Keyboard Suite cannot be automatically installed when I connect the keyboard to my computer for the first time.

Solution: To solve the problem, do the following:

1. Ensure that you are using the Windows 7, Windows 8, Windows 8.1, or Windows 10 operating system.
2. Ensure that your computer has been connected to the Internet.
3. Ensure that you have enabled the automatic Windows update feature by doing the following:
   a. Open Control Panel.
   b. Depending on your Control Panel mode, do one of the following:
      - Click **Hardware and Sound → Devices and Printers**.
      - Click **Devices and Printers**.
   c. Right-click your computer icon under the Devices menu, and then select **Device installation Settings**.
   d. Follow the instructions on the screen to enable the automatic Windows update feature.
4. Ensure that you have installed all Windows updates by doing the following:
   a. Open Control Panel.
   b. Depending on your Control Panel mode, do one of the following:
      - Click **System and Security → Windows Update**.
      - Click **Windows Update**.
   c. Click **Check for updates** to install Windows updates.
5. Disconnect the USB keyboard from the computer and then reconnect it.
6. If the above tips still are not workable, it might be caused by the version or language of your operating system. You can manually install the driver by doing the following:
   a. Go to http://support.lenovo.com/tpkeyboard.
   b. Locate and download the installation file of the driver.
   c. Double-click the installation file, and then follow the instructions on the screen to complete the installation.

Problem: It takes a long time to pair the USB keyboard with the computer on the Windows 7 operating system.

Solution: It is not a problem. When the clock on the USB keyboard icon disappears, the USB keyboard is successfully paired with the computer. If it fails, try reconnecting it again.

Product specifications

The following table describes the USB keyboard specifications.

Keys	84/85/89 keys (varies by country)
Color	Raven black
Dimensions (height x width x depth)	305.5 mm x 164.0 mm x 13.5 mm (not including the tilt feet)
Weight	About 441 g (Including the cable)
Connector type	4-pin USB Type A
Cable length	1.5 m (4.92 feet)
Operating voltage	+5 V (Typical)
Power consumption	100 mA maximum
System interface	USB
Supported operating system	Windows 10 (32-bit and 64-bit) Windows 8.1 (32-bit and 64-bit) Windows 8 (32-bit and 64-bit) Windows 7 (32-bit and 64-bit) Windows Vista (32-bit and 64-bit) Windows XP (32-bit)

Chapter 3. ThinkPad Compact Bluetooth Keyboard with TrackPoint

This chapter provides information about the ThinkPad Compact Bluetooth Keyboard with TrackPoint (hereafter called the Bluetooth keyboard).

Product description

This topic provides a general description of the Bluetooth keyboard.

Front view

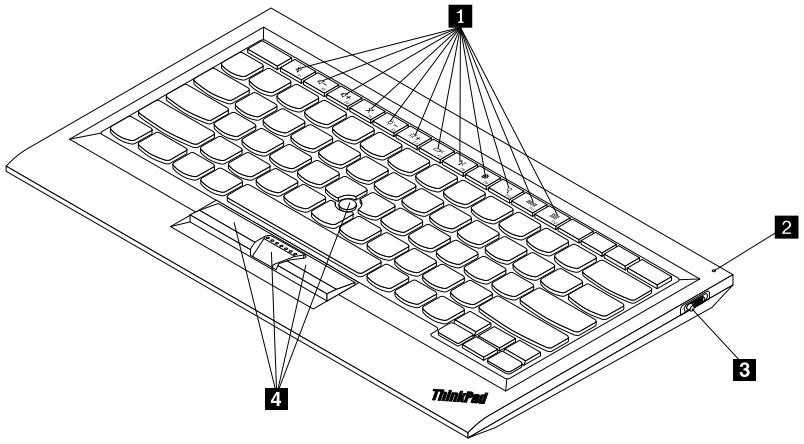

Figure 3. Front view of the Bluetooth keyboard

1 Hot keys

Used as shortcuts for some common computer functions. For more information, see “Using the Fn functions” on page 20.

2 Status indicator

Used to indicate the status of the Bluetooth keyboard.

Status	Color	Description
Fading in	Green	The Bluetooth keyboard is turned on.
Blinking twice at one second intervals	Green	The Bluetooth keyboard is in pairing mode or is establishing a connection with the computer.
Blinking for five times	Green	The Bluetooth keyboard has established a connection with the computer.
Fading out	Green	The Bluetooth keyboard is turned off.
Blinking for three times	Amber	The battery power of the Bluetooth keyboard is low.

© Copyright Lenovo 2013, 2015

3 Power switch: Used to turn on or turn off the Bluetooth keyboard.

To turn on the Bluetooth keyboard, slide down the power switch and press it for one second. The status indicator starts to fade in. To turn off the Bluetooth keyboard, slide down the power switch and hold it for at least three seconds. The status indicator starts to fade out.

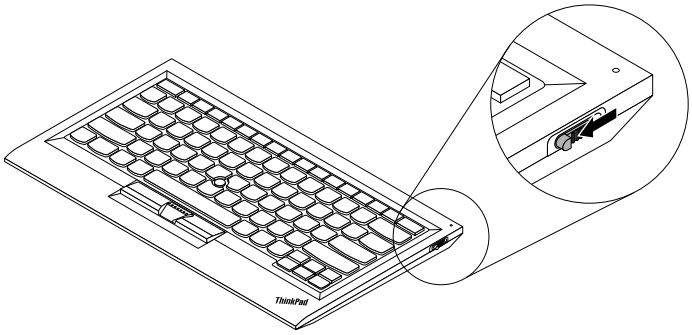

Figure 4. Turn on and turn off the Bluetooth keyboard

Note: To save the battery power, turn off the Bluetooth keyboard when it is not in use.

4 TrackPoint

The TrackPoint consists of a pointing stick and three click buttons. For more information, see “ “Using the TrackPoint” on page 6.

Rear view

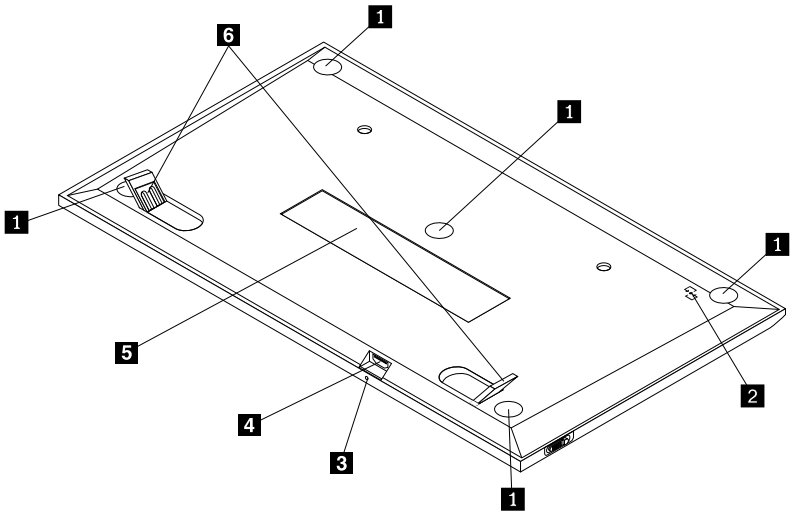

Figure 5. Rear view of the Bluetooth keyboard

1 Non-skid feet

Used to prevent the Bluetooth keyboard from unexpected moving.

2 NFC tag

Used for pairing the Bluetooth keyboard by Near Field Communication (NFC) function.

2 Charging indicator

Used to indicate the charging status of the Bluetooth keyboard. When the Bluetooth keyboard is in charging, the charging indicator is blinking. When the Bluetooth keyboard is fully charged, the charging indicator is solid on.

3 Micro USB connector

You can charge the Bluetooth keyboard by inserting one end of the provided cable to the Micro USB connector and another end to the computer.

4 Identification label

Contains the part number, version number, and some other product information.

5 Tilt feet

Used to adjust the angle of the keyboard to provide comfort.

System requirements

Before installing the Bluetooth keyboard, ensure that your computer meets the following requirements:

- There is an available Integrated Bluetooth host on your computer.
- Your computer has one of the following operating systems installed:
  - Microsoft Windows XP (32-bit)
  - Microsoft Windows Vista (32-bit or 64-bit)
  - Microsoft Windows 7 (32-bit or 64-bit)
  - Microsoft Windows 8 (32-bit or 64–bit)
  - Microsoft Windows 8.1 (32-bit or 64–bit)
  - Microsoft Windows 10 (32-bit or 64–bit)

Before installing the Bluetooth keyboard, it is recommended that you check the Lenovo Support Web site for the latest software updates, including updated basic input/output system code (BIOS), utility programs, device drivers, and other software updates. You can find the Lenovo Support Web site at: http://www.lenovo.com/support

You are responsible for downloading and installing designated software updates from the Support Web site or other electronic media, and following the instructions provided by your Service Provider.

Pairing the Bluetooth keyboard with the computer

To establish a connection and exchange data between the Bluetooth keyboard and the computer, you need to pair the Bluetooth keyboard with the computer.

Notes:

- It is recommended that you pair the Bluetooth keyboard before install the ThinkPad Compact Keyboard with TrackPoint driver (hereafter called the ThinkPad Keyboard Suite).

- Once you have successfully paired the Bluetooth keyboard with the computer, you just need to turn on the power switch on the Bluetooth keyboard each time you use it. The status indicator will blink in green for five times and then turns off.

Depending on your operating system, you can pair the Bluetooth keyboard with the computer by doing one of the following:

For the Windows XP operating system:

1. Turn on the Bluetooth radio in the computer.
2. Double-click the **My Bluetooth Places** icon in the Windows notification area or on the desktop.
3. Slide down the power switch and press it for one second to turn on the Bluetooth in the Bluetooth keyboard. The status indicator starts to flash.
4. Depending on your menu mode, click **View devices in range** or **Search for devices in range**.
5. Double-click the **ThinkPad Compact Bluetooth Keyboard with TrackPoint** icon in the list.
6. Type the passcode shown on the computer screen into the Bluetooth keyboard, and then press Enter. The pairing process begins. After the status indicator turns off, the Bluetooth keyboard has been successfully paired with the computer and a connection is established between the Bluetooth keyboard and the computer.
7. Click **Close** when a window is displayed to confirm that the Bluetooth keyboard is connected with the operating system.

For the Windows Vista or Windows 7 operating system:

1. Turn on the Bluetooth radio in the computer.
2. Click **Start → Control Panel** , and then depending on the operating system you are using, do one of the following:
   - For the Windows Vista operating system, double-click **Bluetooth Devices**, and then click **Add Wireless Device**.
   - For the Windows 7 operating system, click **Devices and Printers → Add a device** .
3. Slide down the power switch and press it for one second to turn on the Bluetooth in the Bluetooth keyboard. The status indicator starts to flash.
4. Select the **ThinkPad Compact Bluetooth Keyboard with TrackPoint** icon from the list and click **Next**.
5. Type the passcode shown on the computer screen into the Bluetooth keyboard, and then press Enter. The pairing process begins. After the status indicator turns off, the Bluetooth keyboard has been successfully paired with the computer and a connection is established between the Bluetooth keyboard and the computer.
6. Click **Close** when a window is displayed to confirm that the Bluetooth keyboard is connected with the operating system.

For the Windows 8 or Windows 8.1 operating system:

1. Turn on the Bluetooth radio in the computer.
2. Move the cursor to the top-right or bottom-right corner of the screen to display the charms, click **Settings → Change PC Settings → Devices**.
3. Slide down the power switch and press it for one second to turn on the Bluetooth in the Bluetooth keyboard. The status indicator starts to flash.
4. Select the **Keyboard (ThinkPad Compact Bluetooth Keyboard with TrackPoint)** icon from the list and click **Next**.

5. Type the passcode shown on the computer screen into the Bluetooth keyboard, and then press Enter. The pairing process begins. After the status indicator turns off, the Bluetooth keyboard has been successfully paired with the computer and a connection is established between the Bluetooth keyboard and the computer.
6. Click **Close** when a window is displayed to confirm that the Bluetooth keyboard is connected with the operating system.

For the Windows 10 operating system:

1. Turn on the Bluetooth radio in the computer.
2. Slide down the power switch and press it for one second to turn on the Bluetooth in the Bluetooth keyboard. The status indicator starts to flash.
3. From the desktop, move the pointer to bottom-left corner of the screen, and then search **Control Panel** in the search box.
4. Click the **Add a device** option under the **Hardware and Sound** menu when viewing the Control Panel by category.
5. Select the **Keyboard (ThinkPad Compact Bluetooth Keyboard with TrackPoint)** icon from the list and click **Next**.
6. Type the passcode shown on the computer screen into the Bluetooth keyboard, and then press Enter. The pairing process begins. After the status indicator turns off, the Bluetooth keyboard has been successfully paired with the computer and a connection is established between the Bluetooth keyboard and the computer.
7. Click **Close** when a window is displayed to confirm that the Bluetooth keyboard is connected with the operating system.

Note: If a window is displayed indicating that the connection fails, right-click the **ThinkPad Compact Bluetooth Keyboard with TrackPoint** icon and select **Disable** to disable the Bluetooth keyboard. Then, pair the Bluetooth keyboard with the computer again.

After the operating system identifies the Bluetooth keyboard, the Bluetooth keyboard will be ready for use. For additional information on this product, go to:
http://www.lenovo.com/support/keyboards

Pairing by NFC function:

Depending on the configuration, you also can pair the Bluetooth keyboard with an NFC-enabled computer by NFC function. The NFC tag is in the bottom-left corner of the Bluetooth keyboard backside.

To pair the Bluetooth keyboard by NFC function, do the following:

1. Align the NFC reader with the NFC tag on the Bluetooth keyboard.
2. A window is displayed to confirm whether you want to add a device.
3. Click the window. The status indicator flashes 5 times and fade out. The Bluetooth keyboard is connected with the computer.

Installing the device driver on Windows operating systems

It is recommended that you install the ThinkPad Keyboard Suite to customize advanced settings before you use the Bluetooth keyboard.

If you are using the Windows 7, Windows 8, Windows 8.1, or Windows 10 operating system, and your computer is connected to the Internet, when you connect the keyboard to your computer for the first time, a message will be displayed asking if you want to install the ThinkPad Keyboard Suite. Click **Download Now**

and the ThinkPad Keyboard Suite will be automatically installed. If the message is not displayed, manually install the ThinkPad Keyboard Suite by doing the following:

1. Go to http://support.lenovo.com/tpkeyboard.
2. Locate and download the installation file of the ThinkPad Keyboard Suite.
3. Double-click the installation file, and then follow the instructions on the screen to complete the installation.
4. Restart the computer, and the ThinkPad Keyboard Suite is installed on your computer.

Uninstalling the device driver from Windows operating systems

To uninstall the ThinkPad Keyboard Suite from the Windows XP, Windows Vista, Windows 7, Windows 8, Windows 8.1, or Windows 10 operating system, do the following:

For the Windows XP operating system:

1. Click **Start → Control Panel** or **Start → Settings → Control Panel**.
2. Depending on your Control Panel mode, click or double-click **Add or Remove Programs** .
3. Click **ThinkPad Compact Keyboard with TrackPoint driver**, and then click **Remove**.
4. Follow the instructions on the screen.

For the Windows Vista or Windows 7 operating system:

1. Click **Start → Control Panel** or **Start → Settings → Control Panel**.
2. Depending on your Control Panel mode, do one of the following:
   - Click the **Uninstall a program** option under the **Programs** menu.
   - Click **Programs and Features**.
3. Select **ThinkPad Compact Keyboard with TrackPoint driver** and then right-click your mouse. The **Uninstall/Change** option is displayed.
4. Click **Uninstall/Change**.
5. Follow the instructions on the screen.

For the Windows 8 or Windows 8.1 operating system:

1. To go to Control Panel, move the pointer to the top-right or bottom-right corner of the screen to display the charms. Click **Search** and then search for Control Panel.
2. Depending on your Control Panel mode, do one of the following:
   - Click the **Uninstall a program** option under the **Programs** menu.
   - Click **Programs and Features**.
3. Select **ThinkPad Compact Keyboard with TrackPoint driver** and then right-click your mouse. The **Uninstall** option is displayed.
4. Click **Uninstall**.
5. Follow the instructions on the screen to uninstall the device driver.

For the Windows 10 operating system:

1. From the desktop, move the pointer to bottom-left corner of the screen, and then search **Control Panel** in the search box.
2. Depending on your Control Panel mode, do one of the following:
   - Click the **Uninstall a program** option under the **Programs** menu.
   - Click **Programs and Features**.
3. Select **ThinkPad Compact Keyboard with TrackPoint driver** and then right-click your mouse. The **Uninstall** option is displayed.
4. Click **Uninstall**.
5. Follow the instructions on the screen to uninstall the device driver.

Using the Bluetooth keyboard

This chapter provides information about using the Bluetooth keyboard.

Using the TrackPoint

The TrackPoint consists of a pointing stick and three click buttons. The pointing stick is used to control the cursor. The three click buttons are the left button, the right button, and the middle button.

To use the pointing stick, do the following:

1. Place your hands at typing position, and press gently on the pointing stick in the direction that you want the cursor to move. You can press the pointing stick away from you to move the cursor up, toward you to move the cursor down, to one side or the other to move the cursor sideways. The speed at which the cursor moves depends on the pressure you apply to the pointing stick.

   Note: The cursor might periodically drift. Stop using the pointing stick for a few seconds and try again. The cursor will work normally.
2. To select an item, stop the pointing stick when the cursor locates the item and press the left or right button with your thumb. The left and right buttons function the same as the left and right buttons on a conventional mouse.

Replacing the pointing stick cap

The cap on top of the pointing stick is removable. You can buy appropriate caps from Lenovo to replace your current cap.

To remove the cap on the pointing stick, simply grasp the top portion of the cap and pull it up. To install a new cap, align the square at the bottom of the cap with the pointing stick and push down until the cap seats into position.

Changing the pointing stick sensitivity

When you are using the pointing stick, you might prefer to use a light touch, or you might want to apply more pressure. You can change the way the pointing stick responds to your touch by doing the following:

1. Click the **ThinkPad Compact Keyboard with TrackPoint** icon on the system tray.
2. In the Mouse Properties window, click **External Keyboard** tab.
3. In the **Pointer speed** area, move the slider toward **Slow** or **Fast** according to your preference.
4. Click **Apply**. Then, test how the pointing stick responds to your new setting and make adjustments if necessary.

5. Click **OK** to apply the setting.

Using the ThinkPad preferred scrolling function

You can scroll through an active window by moving the pointing stick while pressing the middle button. You also can scroll through an inactive window with the ThinkPad Preferred Scrolling function. To configure the scrolling function, do the following:

1. Click the **ThinkPad Compact Keyboard with TrackPoint** icon on the system tray.
2. In the Mouse Properties window, click the **External Keyboard** tab.
3. Depending on your needs, do one of the following:
   - To scroll through active windows just as a conventional mouse, clear **ThinkPad Preferred Scrolling**.
   - To scroll through inactive windows, select **ThinkPad Preferred Scrolling**.
4. Click **OK**.

Note: If you find it can not scroll on some applications, clear **ThinkPad Preferred Scrolling** to get more compliance.

Charging the Bluetooth keyboard

You can charge the Bluetooth keyboard by connecting the Bluetooth keyboard to the computer with the provided cable. It is recommended that you fully charge the Bluetooth keyboard before you use it for the first time. An average full charging time is 2.5 to 3 hours. When the Bluetooth keyboard is in charging, the charging indicator is blinking. When the Bluetooth keyboard is fully charged with the charging indicator solid on, you are recommended to disconnect the Bluetooth keyboard from the computer. Keeping the Bluetooth keyboard connected to the computer will not keep on charging. When you want to charge the Bluetooth keyboard for another time, reconnect the Bluetooth keyboard to the computer. It is recommended that you charge the battery at least one time in every six months.

Using the function key

The following table describes the functions of Fn keys and Fn key combinations. The Bluetooth keyboard acts the default hot key function. After installing the ThinkPad Keyboard Suite, you can achieve the standard F1-F12 function by pressing Fn+F*x* (where *x* represents 1 to 12) keys.

Function key	Function
Fn+Esc	Switch the default Fn function between the hot key and the standard F1-F12 function.
	Mute the speaker.
	Decrease the volume.
	Increase the volume.
	Mute the microphone. **Note:** This function key might not work on the Windows XP and Windows Vista operating systems.

Function key	Function
	Decrease the brightness. **Note:** This function key might not work on the Windows XP and Windows Vista operating systems.
	Increase the brightness. **Note:** This function key might not work on the Windows XP and Windows Vista operating systems.
	Switch between the computer display and an external monitor (Windows will show these display options). **Note:** This function key might not work on the Windows XP and Windows Vista operating systems.
	Enable or disable the built-in wireless networking features. A window will be displayed warning that turning off the wireless will disconnect the wireless mice and keyboards. **Note:** This function key might not work on the Windows XP and Windows Vista operating systems.
	• Open Control Panel. • Open Settings Panel (for the Windows 8 and Windows 8.1 operating systems). • Open the Settings window (for the Windows 10 operating system).
	• Navigate to search depending on your active applications. • Open Search Panel (for the Windows 8 and Windows 8.1 operating systems). • Open the Cortana search box (for the Windows 10 operating system).
	• View open applications. • Switch between open applications (for the Windows XP operating system).
	• Open **My Computer**. • View all applications (for the Windows 8, Windows 8.1, and Windows 10 operating systems).
Fn+Delete	Unpair the Bluetooth keyboard from the computer. **Note:** If you have configured the Bluetooth keyboard in one computer and want to configure it in another computer, it is recommended that you unpair the Bluetooth keyboard from the previous computer first.

If the Fn key combinations do not work correctly on some ThinkPad computers with the Windows XP operating system, ensure that the computer has the latest version of the Lenovo System Interface driver installed.

The most up-to-date software and device drivers for your ThinkPad computer are always available for download at:

http://www.lenovo.com/support

Notes:

- Ensure that the Fn key combinations are functional on the keyboard of your ThinkPad computer. There are software dependencies to get the most complete Fn key combination support for your ThinkPad computer.

- Most of the Fn key combinations do not work with the ThinkPad SL series notebook computers, Lenovo desktop computers, and computers from other manufacturers.
- Some Fn key combinations have different functions on different ThinkPad computer models.
- On the Windows 8, Windows 8.1, and Windows 10 operating systems, when you press Fn+Esc, hotkey F4, or the CapsLock key for the first time, an On Screen Display window might be displayed. If you want to show the on screen display, click **OK**. If you do not want to show the on screen display, click **No, thank you**. To change the on screen display setting, click the **External Keyboard** tab in the Mouse Property window, select **On Screen Displays**. When the box before **On Screen Displays** is in grey, it means that the Bluetooth keyboard follows the system default setting, you can change the system setting by clicking **Advanced OSD setting**.

For more information about the Fn key combinations, refer to the Access Help information system that comes with the ThinkPad computer.

Troubleshooting

This chapter contains troubleshooting information for the Bluetooth keyboard.

Problem: All or some of the Fn function key combinations or function keys do not work.

Solution: Read the following for solutions or explanations:

- Ensure that you have correctly installed the ThinkPad Keyboard Suite.
- Ensure that all the Fn function key combinations are functional on the keyboard of your ThinkPad computer. There are software dependencies to get the most complete Fn key and hot key combination support for your ThinkPad computer. You can get more detailed information about the Fn function key combinations from the documentation that comes with your ThinkPad computer. You might need to download the updated software components for your ThinkPad computer at: http://www.lenovo.com/support
- The Fn function key combinations work with all the ThinkPad computers except ThinkPad SL series notebook computers. Most of the Fn function key combinations do not work with ThinkPad SL series notebook computers, Lenovo desktop computers, or computers from other manufacturers.
- It is normal if you found some of the Fn function key combinations act differently on different ThinkPad computer models due to the differences of the applications installed on your notebook computers.
- Some function keys are not supported depending on your operating system and computer.

Problem: The TrackPoint cursor drifts when the computer is turned on or after the computer resumes normal operation.

Solution: The cursor might drift when you are not using the TrackPoint during normal operation. This is a normal feature of the TrackPoint and is not a defect. Cursor drifting might occur for several seconds under the following conditions:

- The computer is turned on.
- The computer resumes normal operation.
- The TrackPoint pointing stick is kept pressed for a long time.
- The temperature changes.

To solve the problem, you can try reconnecting the Bluetooth keyboard or restart your computer.

Problem: I pressed a button once, but the computer responded as if I pressed it twice.

Solution: Depending on your operating system, adjust the keyboard repeat delay or repeat rate settings by doing one of the following:

- For the Windows XP or Windows Vista operating system:
  1. Depending on your **Start** menu mode, click **Start → Control Panel** or **Start → Settings → Control Panel**
  2. Depending on your Control Panel mode, click or double-click **Keyboard**.
  3. Click the **Speed** tab.
  4. Move the Repeat delay slider to **Long** or the Repeat rate slider to **Slow**.
  5. Click **OK**.

  .
- For the Windows 7 operating system:
  1. Depending on your **Start** menu mode, click **Start → Control Panel** or **Start → Settings → Control Panel**
  2. Click the **View by** menu and select **Small icons** or **Large icons**. The **All Control Panel Items** category is expanded.
  3. Click **Keyboard**.
  4. Click the **Speed** tab.
  5. Move the Repeat delay slider to **Long** or the Repeat rate slider to **Slow**.
  6. Click **OK**.
- For the Windows 8 or Windows 8.1 operating system:
  1. To go to Control Panel, move the pointer to the top-right or bottom-right corner of the screen to display the charms. Click **Search** and then search for Control Panel.
  2. Click the **View by** menu and select the **Small icons** or **Large icons** view. The **All Control Panel Items** category is expanded.
  3. Click **Keyboard**.
  4. Click the **Speed** tab.
  5. Move the Repeat delay slider to **Long** or the Repeat rate slider to **Slow**.
  6. Click **OK**.

For the Windows 10 operating system:

1. From the desktop, move the pointer to bottom-left corner of the screen, and then search **Control Panel** in the search box.
2. Click the **View by** menu and select the **Small icons** or **Large icons** view. The **All Control Panel Items** category is expanded.
3. Click **Keyboard**.
4. Click the **Speed** tab.
5. Move the Repeat delay slider to **Long** or the Repeat rate slider to **Slow**.
6. Click **OK**.

Problem: The Bluetooth keyboard is not recognized by your computer.

Solution: To solve the problem, do the following:

- Ensure that the Bluetooth radio on the computer is turned on and the Bluetooth works.
- Ensure that the Bluetooth connection button on the keyboard is turned on.

- For the Windows XP operating system, ensure that you have downloaded and installed the latest Bluetooth software. If you are using a Lenovo computer with Broadcom Bluetooth solution, check and update to the latest Bluetooth for Windows (BTW) version (BTW 5.6.0.8900 or later version).
- Ensure that the Bluetooth keyboard is within the maximum Bluetooth range (10 m).

Problem: The Bluetooth keyboard lags.

Solution: To solve the problem, try moving the Bluetooth keyboard closer to the computer and removing other objects with wireless signals to avoid signal interference.

Problem: The ThinkPad Keyboard Suite cannot be automatically installed when I connect the keyboard to my computer for the first time.

Solution: To solve the problem, do the following:

1. Ensure that you are using the Windows 7, Windows 8, Windows 8.1, or Windows 10 operating system.
2. Ensure that your computer has been connected to the Internet.
3. Ensure that you have enabled the automatic Windows update feature by doing the following:
   a. Open Control Panel.
   b. Depending on your Control Panel mode, do one of the following:
      - Click **Hardware and Sound → Devices and Printers**.
      - Click **Devices and Printers**.
   c. Right-click your computer icon under the Devices menu, and then select **Device installation Settings**.
   d. Follow the instructions on the screen to enable the automatic Windows update feature.
4. Ensure that you have installed all Windows updates by doing the following:
   a. Open Control Panel.
   b. Depending on your Control Panel mode, do one of the following:
      - Click **System and Security → Windows Update**.
      - Click **Windows Update**.
   c. Click **Check for updates** to install Windows updates.
5. Remove the Bluetooth keyboard from the computer and then reconnect it.
6. If the above tips still are not workable, it might be caused by the version or language of your operating system. You can manually install the ThinkPad Keyboard Suite by doing the following:
   a. Go to http://support.lenovo.com/tpkeyboard.
   b. Locate and download the installation file of the driver.
   c. Double-click the installation file, and then follow the instructions on the screen to complete the installation.

Problem: The Bluetooth keyboard might fail to resume from suspend on the Windows 7, Windows 8, Windows 8.1, or Windows 10 operating system.

Solution: You can check if selective suspend is disabled by going to **Device Manager** and navigating to the Bluetooth keyboard. Right-click the Bluetooth keyboard and go to the Properties page. Clear **Allow the computer to turn off this device to save power** on the **Power Management** tab.

Problem: It takes a long time to pair the Bluetooth keyboard with the computer on the Windows 7 operating system.

Solution: It is not a problem. When the clock on the Bluetooth keyboard icon disappears, the Bluetooth keyboard is successfully paired with the computer. If it fails, try reconnecting it again.

Product specifications

The following table describes the Bluetooth keyboard specifications.

Keys	84/85/89 keys (Varies by country)
Color	Raven black
Dimensions (Height x Width x Depth)	305.5 mm x 164.0 mm x 13.5 mm (not including the tilt feet)
Weight	458 g (including the cable)
PC interface	Bluetooth 3.0
Operating voltage	3.7 V (Typical)
Battery Capability	500 mA (Typical)
Power consumption	50 mA maximum
Cable length	1.5m (4.92 feet)
Supported operating system	USB Type A connector
	Windows 10 (32-bit and 64-bit) Windows 8.1 (32-bit and 64-bit) Windows 8 (32-bit and 64-bit) Windows 7 (32-bit and 64-bit) Windows Vista (32-bit and 64-bit) Windows XP (32-bit)

Appendix A. Service and Support

The following information describes the technical support that is available for your product, during the warranty period or throughout the life of your product. Refer to the Lenovo Limited Warranty for a full explanation of Lenovo warranty terms.

Online technical support

Online technical support is available during the lifetime of a product at:
http://www.lenovo.com/support

Product replacement assistance or exchange of defective components also is available during the warranty period. In addition, if your option is installed in a Lenovo computer, you might be entitled to service at your location. A Lenovo technical support representative can help you determine the best alternative.

Telephone technical support

Installation and configuration support through the Customer Support Center will be available until 90 days after the option has been withdrawn from marketing. After that time, the support is cancelled, or made available for a fee, at Lenovo's discretion. Additional support is also available for a nominal fee.

Before contacting a Lenovo technical support representative, please have the following information available: option name and number, proof of purchase, computer manufacturer, model, serial number and manual, the exact wording of any error message, description of the problem, and the hardware and software configuration information for your system.

Your technical support representative might want to walk you through the problem while you are at your computer during the call.

Telephone numbers are subject to change without notice. The most up-to-date telephone list for Lenovo Support is always available at http://www.lenovo.com/support/phone. If the telephone number for your country or region is not listed, contact your Lenovo reseller or Lenovo marketing representative.

Accessibility information

Documentation in accessible formats

Lenovo provides electronic documentation in accessible formats, such as properly tagged PDF files or HyperText Markup Language (HTML) files. Lenovo electronic documentation is developed to ensure that visually impaired users can read the documentation through a screen reader. Each image in the documentation also includes adequate alternative text to explain the image so that visually impaired users can understand the image when they use a screen reader.

To open and view PDF files, your computer must have the Adobe Reader program installed. The Adobe Reader program also is available for download at:
http://www.adobe.com

© Copyright Lenovo 2013, 2015

Appendix B. Lenovo Limited Warranty

L505-0010-02 08/2011

This Lenovo Limited Warranty consists of the following parts:

Part 1 - General Terms

Part 2 - Country-specific Terms

Part 3 - Warranty Service Information

The terms of **Part 2** replace or modify terms of **Part 1** as specified for a particular country.

Part 1 - General Terms

This Lenovo Limited Warranty applies only to Lenovo hardware products you purchased for your own use and not for resale. This Lenovo Limited Warranty is available in other languages at www.lenovo.com/warranty.

What this Warranty Covers

Lenovo warrants that each Lenovo hardware product that you purchase is free from defects in materials and workmanship under normal use during the warranty period. The warranty period for the product starts on the original date of purchase as shown on your sales receipt or invoice or as may be otherwise specified by Lenovo. The warranty period and type of warranty service that apply to your product are as specified in "**Part 3 - Warranty Service Information**" below. This warranty only applies to products in the country or region of purchase.

THIS WARRANTY IS YOUR EXCLUSIVE WARRANTY AND REPLACES ALL OTHER WARRANTIES OR CONDITIONS, EXPRESS OR IMPLIED, INCLUDING, BUT NOT LIMITED TO, ANY IMPLIED WARRANTIES OR CONDITIONS OF MERCHANTABILITY OR FITNESS FOR A PARTICULAR PURPOSE. AS SOME STATES OR JURISDICTIONS DO NOT ALLOW THE EXCLUSION OF EXPRESS OR IMPLIED WARRANTIES, THE ABOVE EXCLUSION MAY NOT APPLY TO YOU. IN THAT EVENT, SUCH WARRANTIES APPLY ONLY TO THE EXTENT AND FOR SUCH DURATION AS REQUIRED BY LAW AND ARE LIMITED IN DURATION TO THE WARRANTY PERIOD. AS SOME STATES OR JURISDICTIONS DO NOT ALLOW LIMITATIONS ON THE DURATION OF AN IMPLIED WARRANTY, THE ABOVE LIMITATION ON DURATION MAY NOT APPLY TO YOU.

How to Obtain Warranty Service

If the product does not function as warranted during the warranty period, you may obtain warranty service by contacting Lenovo or a Lenovo approved Service Provider. A list of approved Service Providers and their telephone numbers is available at: www.lenovo.com/support/phone.

Warranty service may not be available in all locations and may differ from location to location. Charges may apply outside a Service Provider's normal service area. Contact a local Service Provider for information specific to your location.

Customer Responsibilities for Warranty Service

Before warranty service is provided, you must take the following steps:
- follow the service request procedures specified by the Service Provider;

© Copyright Lenovo 2013, 2015

- backup or secure all programs and data contained in the product;
- provide the Service Provider with all system keys or passwords;
- provide the Service Provider with sufficient, free, and safe access to your facilities to perform service;
- remove all data, including confidential information, proprietary information and personal information, from the product or, if you are unable to remove any such information, modify the information to prevent its access by another party or so that it is not personal data under applicable law. The Service Provider shall not be responsible for the loss or disclosure of any data, including confidential information, proprietary information, or personal information, on a product returned or accessed for warranty service;
- remove all features, parts, options, alterations, and attachments not covered by the warranty;
- ensure that the product or part is free of any legal restrictions that prevent its replacement;
- if you are not the owner of a product or part, obtain authorization from the owner for the Service Provider to provide warranty service.

What Your Service Provider Will Do to Correct Problems

When you contact a Service Provider, you must follow the specified problem determination and resolution procedures.

The Service Provider will attempt to diagnose and resolve your problem by telephone, e-mail or remote assistance. The Service Provider may direct you to download and install designated software updates.

Some problems may be resolved with a replacement part that you install yourself called a “Customer Replaceable Unit” or “CRU.” If so, the Service Provider will ship the CRU to you for you to install.

If your problem cannot be resolved over the telephone; through the application of software updates or the installation of a CRU, the Service Provider will arrange for service under the type of warranty service designated for the product under “**Part 3 - Warranty Service Information**” below.

If the Service Provider determines that it is unable to repair your product, the Service Provider will replace it with one that is at least functionally equivalent.

If the Service Provider determines that it is unable to either repair or replace your product, your sole remedy under this Limited Warranty is to return the product to your place of purchase or to Lenovo for a refund of your purchase price.

Replacement Products and Parts

When warranty service involves the replacement of a product or part, the replaced product or part becomes Lenovo’s property and the replacement product or part becomes your property. Only unaltered Lenovo products and parts are eligible for replacement. The replacement product or part provided by Lenovo may not be new, but it will be in good working order and at least functionally equivalent to the original product or part. The replacement product or part shall be warranted for the balance of the period remaining on the original product.

Use of Personal Contact Information

If you obtain service under this warranty, you authorize Lenovo to store, use and process information about your warranty service and your contact information, including name, phone numbers, address, and e-mail address. Lenovo may use this information to perform service under this warranty. We may contact you to inquire about your satisfaction with our warranty service or to notify you about any product recalls or safety issues. In accomplishing these purposes, you authorize Lenovo to transfer your information to any country where we do business and to provide it to entities acting on our behalf. We may also disclose it where required by law. Lenovo’s privacy policy is available at www.lenovo.com/.

What this Warranty Does not Cover

This warranty does not cover the following:
- uninterrupted or error-free operation of a product;
- loss of, or damage to, your data by a product;
- any software programs, whether provided with the product or installed subsequently;
- failure or damage resulting from misuse, abuse, accident, modification, unsuitable physical or operating environment, natural disasters, power surges, improper maintenance, or use not in accordance with product information materials;
- damage caused by a non-authorized service provider;
- failure of, or damage caused by, any third party products, including those that Lenovo may provide or integrate into the Lenovo product at your request;
- any technical or other support, such as assistance with “how-to” questions and those regarding product set-up and installation;
- products or parts with an altered identification label or from which the identification label has been removed.

Limitation of Liability

Lenovo is responsible for loss or damage to your product only while it is in the Service Provider’s possession or in transit, if the Service Provider is responsible for the transportation.

Neither Lenovo nor the Service Provider is responsible for loss or disclosure of any data, including confidential information, proprietary information, or personal information, contained in a product.

UNDER NO CIRCUMSTANCES, AND NOTWITHSTANDING THE FAILURE OF ESSENTIAL PURPOSE OF ANY REMEDY SET FORTH HEREIN, SHALL LENOVO, ITS AFFILIATES, SUPPLIERS, RESELLERS, OR SERVICE PROVIDERS BE LIABLE FOR ANY OF THE FOLLOWING EVEN IF INFORMED OF THEIR POSSIBILITY AND REGARDLESS OF WHETHER THE CLAIM IS BASED IN CONTRACT, WARRANTY, NEGLIGENCE, STRICT LIABILITY OR OTHER THEORY OF LIABILITY: 1) THIRD PARTY CLAIMS AGAINST YOU FOR DAMAGES; 2) LOSS, DAMAGE OR DISCLOSURE OF YOUR DATA; 3) SPECIAL, INCIDENTAL, PUNITIVE, INDIRECT OR CONSEQUENTIAL DAMAGES, INCLUDING BUT NOT LIMITED TO LOST PROFITS, BUSINESS REVENUE, GOODWILL OR ANTICIPATED SAVINGS. IN NO CASE SHALL THE TOTAL LIABILITY OF LENOVO, ITS AFFILIATESS, SUPPLIERS, RESELLERS OR SERVICE PROVIDERS FOR DAMAGES FROM ANY CAUSE EXCEED THE AMOUNT OF ACTUAL DIRECT DAMAGES, NOT TO EXCEED THE AMOUNT PAID FOR THE PRODUCT.

THE FOREGOING LIMITATIONS DO NOT APPLY TO DAMAGES FOR BODILY INJURY (INCLUDING DEATH), DAMAGE TO REAL PROPERTY OR DAMAGE TO TANGIBLE PERSONAL PROPERTY FOR WHICH LENOVO IS LIABLE UNDER LAW. AS SOME STATES OR JURISDICTIONS DO NOT ALLOW THE EXCLUSION OR LIMITATION OF INCIDENTAL OR CONSEQUENTIAL DAMAGES, THE ABOVE LIMITATION OR EXCLUSION MAY NOT APPLY TO YOU.

Your Other Rights

THIS WARRANTY GIVES YOU SPECIFIC LEGAL RIGHTS. YOU MAY HAVE OTHER RIGHTS ACCORDING TO THE APPLICABLE LAWS OF YOUR STATE OR JURISDICTION. YOU MAY ALSO HAVE OTHER RIGHTS UNDER A WRITTEN AGREEMENT WITH LENOVO. NOTHING IN THIS WARRANTY AFFECTS STATUTORY RIGHTS, INCLUDING RIGHTS OF CONSUMERS UNDER LAWS OR REGULATIONS GOVERNING THE SALE OF CONSUMER GOODS THAT CANNOT BE WAIVED OR LIMITED BY CONTRACT.

Part 2 - Country-specific Terms

Australia

“Lenovo” means Lenovo (Australia & New Zealand) Pty Limited ABN 70 112 394 411. Address: Level 10, North Tower, 1-5 Railway Street, Chatswood, NSW, 2067. Telephone: +61 2 8003 8200. Email: lensyd_au@lenovo.com

The following replaces the same section in Part 1:

What this Warranty Covers:

Lenovo warrants that each hardware product that you purchase is free from defects in materials and workmanship under normal use and conditions during the warranty period. If the product fails due to a covered defect during the warranty period, Lenovo will provide you a remedy under this Limited Warranty. The warranty period for the product starts on the original date of purchase specified on your sales receipt or invoice unless Lenovo informs you otherwise in writing. The warranty period and type of warranty service that apply to your product are set forth below in **Part 3 - Warranty Service Information**.

THE BENEFITS GIVEN BY THIS WARRANTY ARE IN ADDITION TO YOUR RIGHTS AND REMEDIES AT LAW, INCLUDING THOSE UNDER THE AUSTRALIAN CONSUMER LAW.

The following replaces the same section in Part 1:

Replacement Products and Parts:

When warranty service involves the replacement of a product or part, the replaced product or part becomes Lenovo’s property and the replacement product or part becomes your property. Only unaltered Lenovo products and parts are eligible for replacement. The replacement product or part provided by Lenovo may not be new, but it will be in good working order and at least functionally equivalent to the original product or part. The replacement product or part shall be warranted for the balance of the period remaining on the original product. Products and parts presented for repair may be replaced by refurbished products or parts of the same type rather than being repaired. Refurbished parts may be used to repair the product; and repair of the product may result in loss of data, if the product is capable of retaining user-generated data.

The following is added to the same section in Part 1:

Use of Personal Contact Information:

Lenovo will not be able to perform our service under this warranty if you refuse to provide your information or do not wish us to transfer your information to our agent or contractor. You have the right to access your personal contact information and request correction of any errors in it pursuant to the Privacy Act 1988 by contacting Lenovo.

The following replaces the same section in Part 1:

Limitation of Liability:

Lenovo is responsible for loss or damage to your product only while it is in the Service Provider’s possession or in transit, if the Service Provider is responsible for the transportation.

Neither Lenovo nor the Service Provider is responsible for loss or disclosure of any data, including confidential information, proprietary information, or personal information, contained in a product.

TO THE EXTENT PERMITTED BY LAW, UNDER NO CIRCUMSTANCES AND NOTWITHSTANDING THE FAILURE OF ESSENTIAL PURPOSE OF ANY REMEDY SET FORTH HEREIN, SHALL LENOVO, ITS AFFILIATES, SUPPLIERS, RESELLERS, OR SERVICE PROVIDERS BE LIABLE FOR ANY OF THE FOLLOWING EVEN IF INFORMED OF THEIR POSSIBILITY AND REGARDLESS OF WHETHER THE CLAIM IS BASED IN CONTRACT, WARRANTY, NEGLIGENCE, STRICT LIABILITY OR OTHER THEORY OF LIABILITY: 1) THIRD PARTY CLAIMS AGAINST YOU FOR DAMAGES; 2) LOSS, DAMAGE OR DISCLOSURE OF YOUR DATA; 3) SPECIAL, INCIDENTAL, PUNITIVE, INDIRECT OR CONSEQUENTIAL DAMAGES, INCLUDING BUT NOT LIMITED TO LOST PROFITS, BUSINESS REVENUE, GOODWILL OR ANTICIPATED SAVINGS. IN NO CASE SHALL THE TOTAL LIABILITY OF LENOVO, ITS AFFILIATESS, SUPPLIERS, RESELLERS OR SERVICE PROVIDERS FOR DAMAGES FROM ANY CAUSE EXCEED THE AMOUNT OF ACTUAL DIRECT DAMAGES, NOT TO EXCEED THE AMOUNT PAID FOR THE PRODUCT.

THE FOREGOING LIMITATIONS DO NOT APPLY TO DAMAGES FOR BODILY INJURY (INCLUDING DEATH), DAMAGE TO REAL PROPERTY OR DAMAGE TO TANGIBLE PERSONAL PROPERTY FOR WHICH LENOVO IS LIABLE UNDER LAW.

The following replaces the same section in Part 1:

Your Other Rights:

THIS WARRANTY GIVES YOU SPECIFIC LEGAL RIGHTS. YOU ALSO HAVE OTHER RIGHTS AT LAW, INCLUDING UNDER THE AUSTRALIAN CONSUMER LAW. NOTHING IN THIS WARRANTY AFFECTS STATUTORY RIGHTS OR RIGHTS AT LAW, INCLUDING RIGHTS THAT CANNOT BE WAIVED OR LIMITED BY CONTRACT.

For example, our products come with guarantees that cannot be excluded under the Australian Consumer Law. You are entitled to a replacement or refund for a major failure and compensation for any other reasonably foreseeable loss or damage. You are also entitled to have the products repaired or replaced if the products fail to be of acceptable quality and the failure does not amount to a major failure.

New Zealand

The following is added to the same section in Part 1:

Use of Personal Information:

Lenovo will not be able to perform our service under this warranty if you refuse to provide your information or do not wish us to transfer your information to our agent or contractor. You have the right to access your personal information and request correction of any errors in it pursuant to the Privacy Act 1993 by contacting Lenovo (Australia & New Zealand) Pty Limited ABN 70 112 394 411. Address: Level 10, North Tower, 1-5 Railway Street, Chatswood, NSW, 2067. Telephone: 61 2 8003 8200. Email: lensyd_au@lenovo.com

Bangladesh, Cambodia, India, Indonesia, Nepal, Philippines, Vietnam and Sri Lanka

The following is added to Part 1:

Dispute Resolution

Disputes arising out of or in connection with this warranty shall be finally settled by arbitration held in Singapore. This warranty shall be governed, construed and enforced in accordance with the laws of Singapore, without regard to conflict of laws. If you acquired the product in **India**, disputes arising out of or in connection with this warranty shall be finally settled by arbitration held in Bangalore, India. Arbitration in Singapore shall be held in accordance with the Arbitration Rules of Singapore International Arbitration Center ("SIAC Rules") then in effect. Arbitration in India shall be held in accordance with the laws of India then in effect. The arbitration award shall be final and binding on the parties without appeal. Any award

shall be in writing and set forth the findings of fact and the conclusions of law. All arbitration proceedings, including all documents presented in such proceedings shall be conducted in the English language. The English language version of this warranty prevails over any other language version in such proceedings.

European Economic Area (EEA)

The following is added to Part 1:

Customers in the EEA may contact Lenovo at the following address: EMEA Service Organisation, Lenovo (International) B.V., Floor 2, Einsteinova 21, 851 01, Bratislava, Slovakia. Service under this warranty for Lenovo hardware products purchased in EEA countries may be obtained in any EEA country in which the product has been announced and made available by Lenovo.

Russia

The following is added to Part 1:

Product Service Life

The product service life is four (4) years from the original date of purchase.

Part 3 - Warranty Service Information

Product Type	Country or Region of Purchase	Warranty Period	Type of Warranty Service
ThinkPad Compact USB Keyboard with TrackPoint	Worldwide	3 years	1, 4
ThinkPad Compact Bluetooth Keyboard with TrackPoint	Worldwide	1 year	1, 4

If required, your Service Provider will provide repair or exchange service depending on the type of warranty service specified for your product and the available service. Scheduling of service will depend upon the time of your call, parts availability, and other factors.

Types of Warranty Service

1. Customer Replaceable Unit (“CRU”) Service

Under CRU Service, the Service Provider will ship CRUs to you at its cost for installation by you. CRU information and replacement instructions are shipped with your product and are available from Lenovo at any time upon request. CRUs that are easily installed by you are called “Self-service CRUs”. “Optional-service CRUs” are CRUs that may require some technical skill and tools. Installation of Self-service CRUs is your responsibility. You may request that a Service Provider install Optional-service CRUs under one of the other types of warranty service designated for your product. An optional service offering may be available for purchase from a Service Provider or Lenovo under which Self-service CRUs would be installed for you. You may find a list of CRUs and their designation in the publication that was shipped with your product or at www.lenovo.com/CRUs. The requirement to return a defective CRU, if any, will be specified in the instructions shipped with a replacement CRU. When return is required: 1) return instructions, a prepaid return shipping label, and a container will be included with the replacement CRU; and 2) you may be charged for the replacement CRU if the Service Provider does not receive the defective CRU from you within thirty (30) days of your receipt of the replacement CRU.

2. On-site Service

Under On-Site Service, a Service Provider will either repair or exchange the product at your location. You must provide a suitable working area to allow disassembly and reassembly of the product. Some repairs may need to be completed at a service center. If so, the Service Provider will send the product to the service center at its expense.

3. Courier or Depot Service

Under Courier or Depot Service, your product will be repaired or exchanged at a designated service center, with shipping at the expense of the Service Provider. You are responsible for disconnecting the product and packing it in a shipping container provided to you to return your product to a designated service center. A courier will pick up your product and deliver it to the designated service center. The service center will return the product to you at its expense.

4. Customer Carry-In Service

Under Customer Carry-In Service, your product will be repaired or exchanged after you deliver it to a designated service center at your risk and expense. After the product has been repaired or exchanged, it will be made available to you for collection. If you fail to collect the product, the Service Provider may dispose of the product as it sees fit, with no liability to you.

5. Mail-In Service

Under Mail-In Service, your product will be repaired or exchanged at a designated service center after you deliver it at your risk and expense. After the product has been repaired or exchanged, it will be returned to you at Lenovo's risk and expense, unless the Service Provider specifies otherwise.

6. Customer Two-Way Mail-In Service

Under Customer Two-Way Mail-In Service, your product will be repaired or exchanged after you deliver it to a designated service center at your risk and expense. After the product has been repaired or exchanged, it will be made available to you for return shipping at your risk and expense. If you fail to arrange return shipment, the Service Provider may dispose of the product as it sees fit, with no liability to you.

7. Product Exchange Service

Under Product Exchange Service, Lenovo will ship a replacement product to your location. You are responsible for its installation and verification of its operation. The replacement product becomes your property in exchange for the failed product, which becomes the property of Lenovo. You must pack the failed product in the shipping carton in which you received the replacement product and return it to Lenovo. Transportation charges, both ways, shall be at Lenovo's expense. If you fail to use the carton in which the replacement product was received, you may be responsible for any damage to the failed product occurring during shipment. You may be charged for the replacement product if Lenovo does not receive the failed product within thirty (30) days of your receipt of the replacement product.

Suplemento de Garantía para México

Este Suplemento de Garantía se considera parte integrante de la Garantía Limitada de Lenovo y será efectivo única y exclusivamente para los productos distribuidos y comercializados dentro del Territorio de los Estados Unidos Mexicanos. En caso de conflicto, se aplicarán los términos de este Suplemento.

El comercializador responsable del producto es Lenovo México S de R L de CV y para efectos de esta garantía en la República Mexicana su domicilio es Paseo de Tamarindos No.400-A Piso 27 Arcos Torre Poniente, Bosques de Las Lomas, Delegación Miguel Hidalgo, C.P. 05120 México, D.F. En el caso de que se precise una reparación cubierta por la garantía o precise de partes, componentes, consumibles o accesorios diríjase a este domicilio.

Si no existiese ningún Centro de servicio autorizado en su ciudad, población o en un radio de 70 kilómetros de su ciudad o población, la garantía incluirá cualquier gasto de entrega razonable relacionado con el transporte del producto a su Centro de servicio autorizado más cercano. Por favor, llame al Centro de servicio autorizado más cercano para obtener las aprobaciones necesarias o la información relacionada con el envío del producto y la dirección de envío.

Esta garantía ampara todas las piezas de hardware del producto e incluye mano de obra.

El procedimiento para hacer efectiva la garantía consiste en la presentación del producto, acompañado de la póliza correspondiente, debidamente sellada por el establecimiento que lo vendió, o la factura, o recibo o comprobante, en el que consten los datos específicos del producto objeto de la compraventa.

Lenovo sólo pueden eximirse de hacer efectiva la garantía en los siguientes casos: a) Cuando el producto se hubiese utilizado en condiciones distintas a las normales. b) Cuando el producto no hubiese sido operado de acuerdo con el instructivo de uso que se le acompaña. c) Cuando el producto hubiese sido alterado o reparado por personas no autorizadas por el fabricante nacional, importador o comercializador responsable respectivo.

Todos los programas de software precargados en el equipo sólo tendrán una garantía de noventa (90) días por defectos de instalación desde la fecha de compra. Lenovo no es responsable de la información incluida en dichos programas de software y /o cualquier programa de software adicional instalado por Usted o instalado después de la compra del producto.

La garantía cubre la atención, revisión y corrección de errores, defectos o inconsistencias que impidan el desempeño normal de un equipo de cómputo en cuanto a su hardware y software. Los servicios no cubiertos por la garantía se cargarán al usuario final, previa obtención de una autorización.

Esta garantía tiene una duración de un año a partir del momento de la compra e incluye la mano de obra, por lo que en caso de aplicarse la garantía, esta no causara ningún gasto o costo para el cliente.

Centros de Servicios autorizados para hacer efectiva la garantía:

- Lenovo México con domicilio en Paseo de Tamarindos No.400-A Piso 27 Arcos, Torre Poniente, Bosques de Las Lomas, Delegación Miguel Hidalgo, C.P. 05120 México, D.F. Teléfono 01800- 083-4916, http://support.lenovo.com/es_MX/product-service/service-provider/default.page
- Lenovo Monterrey con domicilio en Boulevard Escobedo No.316, Apodaca Technology Park, Apodaca, C.P. 66601, Nuevo León, México. Teléfono 01800- 083-4916, http://support.lenovo.com/es_MX/product-service/service-provider/default.page

Importado por:
Lenovo México S. de R.L. de C.V.
Av. Santa Fe 505, Piso 15
Col. Cruz Manca
Cuajimalpa, D.F., México
C.P. 05349
Tel. (55) 5000 8500

Appendix C. Electronic emission notices

The following information refers to the ThinkPad Compact USB Keyboard with TrackPoint and ThinkPad Compact Bluetooth Keyboard with TrackPoint.

ThinkPad Compact Bluetooth Keyboard with TrackPoint – 0B47189

For electronic emissions information on Class B digital devices and compliance information, refer to the Regulatory Notices publication that is available on the Lenovo Support Web site at:
http://www.lenovo.com/support/keyboards

Lenovo, Einsteinova 21, 851 01 Bratislava, Slovakia

CE

Lenovo product service information for Taiwan

台灣 Lenovo 產品服務資訊如下:
荷蘭商聯想股份有限公司台灣分公司
台北市內湖區堤頂大道二段89號5樓
服務電話：0800-000-702

Federal Communications Commission Declaration of Conformity

ThinkPad Compact USB Keyboard with TrackPoint – 0B47190

This equipment has been tested and found to comply with the limits for a Class B digital device, pursuant to Part 15 of the FCC Rules. These limits are designed to provide reasonable protection against harmful interference in a residential installation. This equipment generates, uses, and can radiate radio frequency energy and, if not installed and used in accordance with the instructions, may cause harmful interference to radio communications. However, there is no guarantee that interference will not occur in a particular installation. If this equipment does cause harmful interference to radio or television reception, which can be determined by turning the equipment off and on, the user is encouraged to try to correct the interference by one or more of the following measures:

- Reorient or relocate the receiving antenna.
- Increase the separation between the equipment and receiver.
- Connect the equipment into an outlet on a circuit different from that to which the receiver is connected.
- Consult an authorized dealer or service representative for help.

Lenovo is not responsible for any radio or television interference caused by using other than specified or recommended cables and connectors or by unauthorized changes or modifications to this equipment. Unauthorized changes or modifications could void the user's authority to operate the equipment.

This device complies with Part 15 of the FCC Rules. Operation is subject to the following two conditions: (1) this device may not cause harmful interference, and (2) this device must accept any interference received, including interference that may cause undesired operation.

Responsible Party:
Lenovo (United States) Incorporated
1009 Think Place - Building One
Morrisville, NC 27560
Phone Number: 919-294-5900

© Copyright Lenovo 2013, 2015

European Union - Compliance to the Electromagnetic Compatibility Directive

This product is in conformity with the protection requirements of EU Council Directive 2004/108/EC on the approximation of the laws of the Member States relating to electromagnetic compatibility. Lenovo cannot accept responsibility for any failure to satisfy the protection requirements resulting from a non-recommended modification of the product, including the installation of option cards from other manufacturers.

This product has been tested and found to comply with the limits for Class B Information Technology Equipment according to European Standard EN 55022. The limits for Class B equipment were derived for typical residential environments to provide reasonable protection against interference with licensed communication devices.

Lenovo, Einsteinova 21, 851 01 Bratislava, Slovakia

German Class B compliance statement

Deutschsprachiger EU Hinweis:

Hinweis für Geräte der Klasse B EU-Richtlinie zur Elektromagnetischen Verträglichkeit
Dieses Produkt entspricht den Schutzanforderungen der EU-Richtlinie 2004/108/EG (früher 89/336/EWG) zur Angleichung der Rechtsvorschriften über die elektromagnetische Verträglichkeit in den EU-Mitgliedsstaaten und hält die Grenzwerte der EN 55022 Klasse B ein.

Um dieses sicherzustellen, sind die Geräte wie in den Handbüchern beschrieben zu installieren und zu betreiben. Des Weiteren dürfen auch nur von der Lenovo empfohlene Kabel angeschlossen werden. Lenovo übernimmt keine Verantwortung für die Einhaltung der Schutzanforderungen, wenn das Produkt ohne Zustimmung der Lenovo verändert bzw. wenn Erweiterungskomponenten von Fremdherstellern ohne Empfehlung der Lenovo gesteckt/eingebaut werden.

Deutschland:

Einhaltung des Gesetzes über die elektromagnetische Verträglichkeit von Betriebsmitteln
Dieses Produkt entspricht dem „Gesetz über die elektromagnetische Verträglichkeit von Betriebsmitteln“ EMVG (früher „Gesetz über die elektromagnetische Verträglichkeit von Geräten“). Dies ist die Umsetzung der EU-Richtlinie 2004/108/EG (früher 89/336/EWG) in der Bundesrepublik Deutschland.

Zulassungsbescheinigung laut dem Deutschen Gesetz über die elektromagnetische Verträglichkeit von Betriebsmitteln, EMVG vom 20. Juli 2007 (früher Gesetz über die elektromagnetische Verträglichkeit von Geräten), bzw. der EMV EG Richtlinie 2004/108/EC (früher 89/336/EWG), für Geräte der Klasse B.

Dieses Gerät ist berechtigt, in Übereinstimmung mit dem Deutschen EMVG das EG-Konformitätszeichen - CE - zu führen. Verantwortlich für die Konformitätserklärung nach Paragraf 5 des EMVG ist die Lenovo (Deutschland) GmbH, Gropiusplatz 10, D-70563 Stuttgart.

Informationen in Hinsicht EMVG Paragraf 4 Abs. (1) 4:
Das Gerät erfüllt die Schutzanforderungen nach EN 55024 und EN 55022 Klasse B.

Korea Class B compliance statement

B급 기기(가정용 방송통신기자재)
이 기기는 가정용(B급) 전자파적합기기로서 주로 가정에서 사용하는 것을 목적으로 하며, 모든 지역에서 사용할 수 있습니다

Japan VCCI Class B compliance statement

この装置は，クラスB情報技術装置です。 この装置は，家庭環境で使用することを目的としていますが，この装置がラジオやテレビジョン受信機に近接して使用されると，受信障害を引き起こすことがあります。
取扱説明書に従って正しい取り扱いをして下さい。 VCCI-B

Lenovo product service information for Taiwan

台灣 Lenovo 產品服務資訊如下:
荷蘭商聯想股份有限公司台灣分公司
台北市內湖區堤頂大道二段89號5樓
服務電話：0800-000-702

Eurasian compliance mark

EAC

Appendix D. Notices

Lenovo may not offer the products, services, or features discussed in this document in all countries. Consult your local Lenovo representative for information on the products and services currently available in your area. Any reference to a Lenovo product, program, or service is not intended to state or imply that only that Lenovo product, program, or service may be used. Any functionally equivalent product, program, or service that does not infringe any Lenovo intellectual property right may be used instead. However, it is the user's responsibility to evaluate and verify the operation of any other product, program, or service.

Lenovo may have patents or pending patent applications covering subject matter described in this document. The furnishing of this document does not give you any license to these patents. You can send license inquiries, in writing, to:

Lenovo (United States), Inc.
1009 Think Place - Building One
Morrisville, NC 27560
U.S.A.
Attention: Lenovo Director of Licensing

LENOVO PROVIDES THIS PUBLICATION “AS IS” WITHOUT WARRANTY OF ANY KIND, EITHER EXPRESS OR IMPLIED, INCLUDING, BUT NOT LIMITED TO, THE IMPLIED WARRANTIES OF NON-INFRINGEMENT, MERCHANTABILITY OR FITNESS FOR A PARTICULAR PURPOSE. Some jurisdictions do not allow disclaimer of express or implied warranties in certain transactions, therefore, this statement may not apply to you.

This information could include technical inaccuracies or typographical errors. Changes are periodically made to the information herein; these changes will be incorporated in new editions of the publication. Lenovo may make improvements and/or changes in the product(s) and/or the program(s) described in this publication at any time without notice.

Recycling information

Lenovo encourages owners of information technology (IT) equipment to responsibly recycle their equipment when it is no longer needed. Lenovo offers a variety of programs and services to assist equipment owners in recycling their IT products. For information on recycling Lenovo products, go to:
http://www.lenovo.com/recycling

Recycling and disposal information for Japan is available at:
http://www.lenovo.com/recycling/japan

Recycling information for China

《废弃电器电子产品回收处理管理条例》提示性说明

联想鼓励拥有联想品牌产品的用户当不再需要此类产品时，遵守国家废弃电器电子产品回收处理相关法律法规，将其交给当地具有国家认可的回收处理资质的厂商进行回收处理。更多回收服务信息，请点击进入
http://support.lenovo.com.cn/activity/551.htm

© Copyright Lenovo 2013, 2015

Recycling information for Brazil

Declarações de Reciclagem no Brasil

Descarte de um Produto Lenovo Fora de Uso

Equipamentos elétricos e eletrônicos não devem ser descartados em lixo comum, mas enviados à pontos de coleta, autorizados pelo fabricante do produto para que sejam encaminhados e processados por empresas especializadas no manuseio de resíduos industriais, devidamente certificadas pelos orgãos ambientais, de acordo com a legislação local.

A Lenovo possui um canal específico para auxiliá-lo no descarte desses produtos. Caso você possua um produto Lenovo em situação de descarte, ligue para o nosso SAC ou encaminhe um e-mail para: reciclar@lenovo.com, informando o modelo, número de série e cidade, a fim de enviarmos as instruções para o correto descarte do seu produto Lenovo.

Important WEEE information

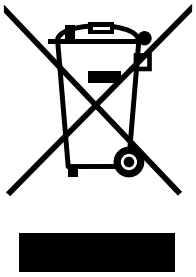

The WEEE marking on Lenovo products applies to countries with WEEE and e-waste regulations (for example, the European WEEE Directive, India E-Waste Management & Handling Rules, 2011). Appliances are labeled in accordance with local regulations concerning waste electrical and electronic equipment (WEEE). These regulations determine the framework for the return and recycling of used appliances as applicable within each geography. This label is applied to various products to indicate that the product is not to be thrown away, but rather put in the established collection systems for reclaiming these end of life products.

Users of electrical and electronic equipment (EEE) with the WEEE marking must not dispose of end of life EEE as unsorted municipal waste, but use the collection framework available to them for the return, recycle, and recovery of WEEE and to minimize any potential effects of EEE on the environment and human health due to the presence of hazardous substances. For additional WEEE information go to: http://www.lenovo.com/recycling

Export Classification Notice

This product is subject to the United States Export Administration regulations (EAR) and has an Export Classification Control Number (ECCN) of EAR99. It can be re-exported except to any of the embargoed countries in the EAR E1 country list.

Trademarks

The following terms are trademarks or service marks of Lenovo in the United States, other countries, or both:
Lenovo
ThinkPad
TrackPoint

Microsoft, Windows, and Windows Vista are trademarks of the Microsoft group of companies.

Other company, product, or service names may be trademarks or service marks of others.

Appendix E. Restriction of Hazardous Substances Directive (RoHS)

European Union RoHS

Lenovo products sold in the European Union, on or after 3 January 2013 meet the requirements of Directive 2011/65/EU on the restriction of the use of certain hazardous substances in electrical and electronic equipment (“RoHS recast” or “RoHS 2”).

For more information about Lenovo progress on RoHS, go to:
http://www.lenovo.com/social_responsibility/us/en/RoHS_Communication.pdf

China RoHS

为满足中国电子电气产品有害物质限制相关的法律法规和其他要求，联想公司对本产品中有害物质，按部件分类，声明如下。

部件名称	有害物质					
	铅（Pb）	汞（Hg）	镉（Cd）	六价铬（Cr（VI））	多溴联苯（PBB）	多溴二苯醚（PBDE）
印刷电路板组件*	X	O	O	O	O	O
外壳及附件	X	O	O	O	O	O

本表格依据SJ/T 11364的规定编制。
O：表示该有害物质在该部件所有均质材料中的含量均在GB/T 26572规定的限量要求以下。
×：表示该有害物质至少在该部件的某一均质材料中的含量超出GB/T 26572规定的限量要求。
表中标记“×”的部件，皆因全球技术发展水平限制而无法实现有害物质的替代。

印刷电路板组件*：包括印刷电路板及其零部件，电子元器件等

根据产品型号不同，您所购买的产品可能不会含有以上所有部件

在中华人民共和国境内销售的电子电气产品上将印有“环保使用期”（EPuP）符号。圆圈中的数字代表产品的正常环保使用年限。

Turkish RoHS

The Lenovo product meets the requirements of the Republic of Turkey Directive on the Restriction of the Use of Certain Hazardous Substances in Waste Electrical and Electronic Equipment (WEEE).

Türkiye AEEE Yönetmeliğine Uygunluk Beyanı

Bu Lenovo ürünü, T.C. Çevre ve Orman Bakanlığı'nın “Atık Elektrik ve Elektronik Eşyalarda Bazı Zararlı Maddelerin Kullanımının Sınırlandırılmasına Dair Yönetmelik (AEEE)” direktiflerine uygundur.

AEEE Yönetmeliğine Uygundur.

Ukraine RoHS

Цим підтверджуємо, що продукція Леново відповідає вимогам нормативних актів України, які обмежують вміст небезпечних речовин

© Copyright Lenovo 2013, 2015

India RoHS

RoHS compliant as per E-Waste (Management & Handling) Rules, 2011.

Part Number: 0B58442

Printed in China

(1P) P/N: 0B58442