Thinking of you
Electrolux

EGE6182NOK

EN HOB

USER MANUAL

CONTENTS

1. SAFETY INFORMATION 3
2. SAFETY INSTRUCTIONS 4
3. PRODUCT DESCRIPTION 6
4. DAILY USE 7
5. HELPFUL HINTS AND TIPS 8
6. CARE AND CLEANING 9
7. TROUBLESHOOTING 11
8. INSTALLATION 13
9. TECHNICAL INFORMATION 15

WE'RE THINKING OF YOU

Thank you for purchasing an Electrolux appliance. You've chosen a product that brings with it decades of professional experience and innovation. Ingenious and stylish, it has been designed with you in mind. So whenever you use it, you can be safe in the knowledge that you'll get great results every time.

Welcome to Electrolux.

Visit our website for:



Get usage advice, brochures, trouble shooter, service information:
www.electrolux.com



Register your product for better service:
www.electrolux.com/productregistration



Buy Accessories, Consumables and Original spare parts for your appliance:
www.electrolux.com/shop

CUSTOMER CARE AND SERVICE

We recommend the use of original spare parts.
When contacting Service, ensure that you have the following data available.
The information can be found on the rating plate. Model, PNC, Serial Number.

Warning / Caution-Safety information

General information and tips

Environmental information

Subject to change without notice.

1. SAFETY INFORMATION

Before the installation and use of the appliance, carefully read the supplied instructions. The manufacturer is not responsible if an incorrect installation and use causes injuries and damages. Always keep the instructions with the appliance for future reference.

1.1 Children and vulnerable people safety

⚠ **WARNING!**
Risk of suffocation, injury or permanent disability.

- This appliance can be used by children aged from 8 years and above and persons with reduced physical, sensory or mental capabilities or lack of experience and knowledge if they are supervised by an adult or a person who is responsible for their safety.
- Do not let children play with the appliance.
- Keep all packaging away from children.
- Keep children and pets away from the appliance when it operates or when it cools down. Accessible parts are hot.
- If the appliance has a child safety device, we recommend that you activate it.
- Cleaning and user maintenance shall not be made by children without supervision.

1.2 General Safety

- The appliance and its accessible parts become hot during use. Do not touch the heating elements.
- Do not operate the appliance by means of an external timer or separate remote-control system.
- Unattended cooking on a hob with fat or oil can be dangerous and may result in fire.

- Never try to extinguish a fire with water, but switch off the appliance and then cover flame e.g. with a lid or a fire blanket.
- Do not store items on the cooking surfaces.
- Do not use a steam cleaner to clean the appliance.
- Metallic objects such as knives, forks, spoons and lids should not be placed on the hob surface since they can get hot.
- If the glass ceramic surface is cracked, switch off the appliance to avoid the possibility of electric shock.
- If the supply cord is damaged, it must be replaced by the manufacturer, an authorized Service or similarly qualified persons in order to avoid a hazard.

2. ⚠ SAFETY INSTRUCTIONS

This appliance is suitable for the following markets: PT

2.1 Installation

⚠ **WARNING!**
Only a qualified person must install this appliance.

- Remove all the packaging.
- Do not install or use a damaged appliance.
- Obey the installation instruction supplied with the appliance.
- Keep the minimum distance from the other appliances and units.
- Always be careful when you move the appliance because it is heavy. Always wear safety gloves.
- Seal the cut surfaces with a sealant to prevent moisture to cause swelling.
- Protect the bottom of the appliance from steam and moisture.
- Do not install the appliance adjacent to a door or under a window. This prevents hot cookware to fall from the appliance when the door or the window is opened.
- If the appliance is installed above drawers make sure that the space, between the bottom of the appliance and the upper drawer, is sufficient for air circulation.
- The bottom of the appliance can get hot. We recommend to install a non-combustile separation panel under the appliance to prevent access to the bottom.

Electrical connection

⚠ **WARNING!**
Risk of fire and electrical shock.

- All electrical connections must be made by a qualified electrician.
- The appliance must be earthed.
- Before carrying out any operation make sure that the appliance is disconnected from the power supply.
- Use the correct electricity mains cable.
- Do not let the electricity mains cable tangle.
- Make sure the mains cable or plug (if applicable) does not touch the hot appliance or hot cookware, when you

connect the appliance to the near sockets

- Make sure the appliance is installed correctly. Loose and incorrect electricity mains cable or plug (if applicable) can make the terminal become too hot.
- Make sure that a shock protection is installed.
- Use the strain relief clamp on cable.
- Make sure not to cause damage to the mains plug (if applicable) or to the mains cable. Contact the Service or an electrician to change a damaged mains cable.
- The electrical installation must have an isolation device which lets you disconnect the appliance from the mains at all poles. The isolation device must have a contact opening width of minimum 3 mm.
- Use only correct isolation devices: line protecting cut-outs, fuses (screw type fuses removed from the holder), earth leakage trips and contactors.

Gas connection

- All gas connections should be made by a qualified person.
- Before installation, make sure that the local distribution conditions (nature of the gas and gas pressure) and the adjustment of the appliance are compatible.
- Make sure that there is air circulation around the appliance.
- The information about the gas supply is on the rating plate.
- This appliance is not connected to a device, which evacuates the products of combustion. Make sure to connect the appliance according to current installation regulations. Pay attention to requirements regarding adequate ventilation.

2.2 Use

WARNING!
Risk of injury, burns or electric shock.

- Remove all the packaging, labelling and protective film (if applicable) before first use.
- Use this appliance in a household environment.
- Do not change the specification of this appliance.
- Do not let the appliance stay unattended during operation.
- Do not operate the appliance with wet hands or when it has contact with water.
- Do not put cutlery or saucepan lids on the cooking zones. They become hot.
- Set the cooking zone to “off” after use.
- Do not use the appliance as a work surface or as a storage surface.
- If the surface of the appliance is cracked, disconnect immediately the appliance from the power supply. This to prevent an electrical shock.
- When you place food into hot oil, it may splash.

WARNING!
Risk of fire or explosion.

- Fats and oil when heated can release flammable vapours. Keep flames or heated objects away from fats and oils when you cook with them.
- The vapours that very hot oil releases can cause spontaneous combustion.
- Used oil, that can contain food remnants, can cause fire at a lower temperature than oil used for the first time.
- Do not put flammable products or items that are wet with flammable products in, near or on the appliance.

WARNING!
Risk of damage to the appliance.

- Do not keep hot cookware on the control panel.
- Do not let cookware to boil dry.
- Be careful not to let objects or cookware fall on the appliance. The surface can be damaged.
- Do not activate the cooking zones with empty cookware or without cookware.
- Do not put aluminium foil on the appliance.
- Cookware made of cast iron, aluminium or with a damaged bottom can cause scratches on the glass or glass ceramic. Always lift these objects up when

you have to move them on the cooking surface.

- This appliance is for cooking purposes only. Do not use the appliance for other purposes, as for example room heating.
- The use of a gas cooking appliance results in the production of heat and moisture. Provide good ventilation in the room where the appliance is installed.
- Make sure that the ventilation openings are not blocked.
- Prolonged intensive use of the appliance may call for additional ventilation, for example opening of a window, or more effective ventilation, for example increasing the level of mechanical ventilation where present.
- Use only stable cookware with the correct shape and diameter larger than the dimensions of the burners. There is a risk of overheating and rupture of the glass plate (if applicable).
- Make sure the flame does not go out when you quickly turn the knob from the maximum to the minimum position.
- Make sure pots are centrally positioned on the rings and do not stick out over edges of the cooking surface.
- Use only the accessories supplied with the appliance.
- Do not install a flame diffuser on the burner.

2.3 Care and Cleaning

WARNING!
Risk of damage to the appliance.

- Clean regularly the appliance to prevent the deterioration of the surface material.
- Do not use water spray and steam to clean the appliance.
- Do not clean the burners in the dishwasher.
- Clean the appliance with a moist soft cloth. Only use neutral detergents. Do not use abrasive products, abrasive cleaning pads, solvents or metal objects.

2.4 Disposal

WARNING!
Risk of injury or suffocation.

- Contact your municipal authority for information on how to discard the appliance correctly.
- Disconnect the appliance from the mains supply.
- Cut off the mains cable and discard it.
- Flat the external gas pipes.

3. PRODUCT DESCRIPTION

3.1 Cooking surface layout

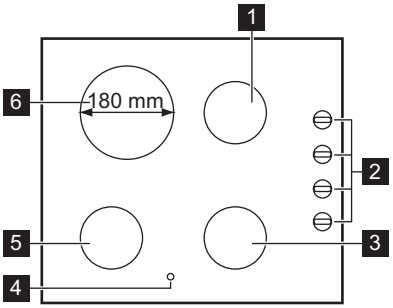

1 Semi-rapid burner
2 Control knobs
3 Auxiliary burner
4 Residual heat indicator
5 Rapid burner
6 Electric cooking zone 1800 W

3.2 Control knobs

Symbol	Description
●	no gas supply / off position
✱ 🔥	ignition position / maximum gas supply
🔥	minimum gas supply

3.3 Electric cooking zones control knobs

Symbol	Function
0	off position
1	minimum heat
6	maximum heat

3.4 Residual heat indicator

The residual heat indicator comes on when a cooking zone is hot.

WARNING!
Risk of burns from residual heat!

4. DAILY USE

WARNING!
Refer to the Safety chapters.

4.1 Ignition of the burner

WARNING!
Be very careful when you use open fire in kitchen environment. Manufacturer decline any responsibility in case misuse of the flame

Always light the burner before you put cookware.

To light the burner:

1. Turn the control knob counterclockwise to the maximum position (✱ 🔥) and push it down.
2. Keep the control knob pushed for approximately 5 seconds; this will let thermocouple to warm up. If not, the gas supply will be interrupted.
3. Adjust the flame after it is regular.

If after some tries the burner does not light, check if the crown and its cap are in correct positions.

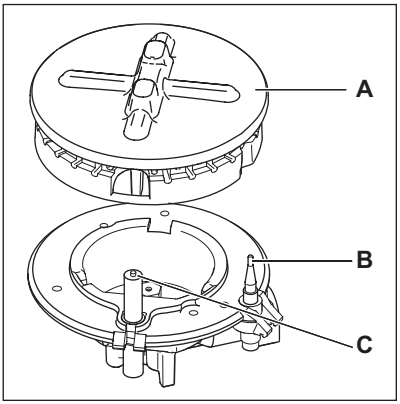

A) Burner cap and crown
B) Thermocouple
C) Ignition candle

WARNING!
Do not keep the control knob pushed for more than 15 seconds.
If the burner does not light after 15 seconds, release the control knob, turn it into off position and try to light the burner again after minimum 1 minute.

In the absence of electricity you can ignite the burner without electrical device; in this case approach the burner with a flame, push the relevant knob down and turn it counter-clockwise to maximum gas release position.

If the burner accidentally goes out, turn the control knob to the off position and try to light the burner again after minimum 1 minute.

The spark generator can start automatically when you switch on the mains, after installation or a power cut. It is normal.

4.2 Turning the burner off

To put the flame out, turn the knob to the symbol ● .

WARNING!
Always turn the flame down or switch it off before removing the pans off the burner.

4.3 Operating electric zones

To switch on and increase the heat setting turn the knob clockwise. To decrease the heat setting turn the knob counter-clockwise. To switch off turn the knob to the 0.
Power indicator is activated when electric cooking zone is turned on, and will stay on until electric cooking zone is switched off.

When a cooking zone operates, it hums for a short time. This is typical of all ceramic glass cooking zones and does not show that the appliance operates incorrectly.

4.4 Before first use

Put on all cooking zones a pan filled with some water. Set the maximum position and operate the appliance for approximately 10 minutes until water inside the pans boils. After that, operate the appliance at minimum position for 20 minutes. During this period, an odour and smoke can occur. This is normal. Make sure that the airflow is sufficient.
After this operation, clean the appliance with a soft cloth soaked in warm water.

4.5 Examples of cooking applications

Heat setting:	Use to:
1	Keeping warm
2	Gentle simmering
3	Simmering
4	Frying / browning
5	Bringing to the boil
6	Bringing to the boil / quick frying / deep-frying

5. HELPFUL HINTS AND TIPS

WARNING!
Refer to the Safety chapters.

5.1 Energy saving

- If possible, always put the lids on the cookware.
- Put cookware on a cooking zone before you start it.
- Stop the electrical cooking zones before the end of the cooking time to use residual heat.
- The bottom of pans and electrical cooking zones must have the same dimensions.

5.2 Cookware

- The bottom of the cookware must be as thick and flat as possible.
- Cookware made of enamelled steel and with aluminium or copper bottoms can cause the colour change on glass-ceramic surface.

- When the liquid starts to boil, turn down the flame to barely simmer the liquid.

Use cookware with diameters applicable to the size of burners.

Burner	Diameters of cookware
Rapid	160 - 260 mm
Semi-rapid	120 - 220 mm
Auxiliary	80 - 160 mm

WARNING!
Do not use cast iron pans, pot-stones, grill or toaster plates on gas burners.

WARNING!
Make sure that the bottoms of pots do not stand above the control knobs. If the control knobs are under the bottoms of pots, the flame heats them up.
Do not put the same pan on two burners.

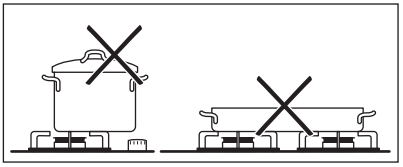

WARNING!
Make sure that pot handles is not above the front edge of the cooktop. Make sure that pots are centrally put on the rings in order to get maximum stability and to get lower gas consumption.

Do not put unstable or damaged pots on the rings to prevent from spill and injury.

WARNING!
Do not use a flame diffuser.

WARNING!
Liquids spilt during cooking can cause the glass to break

6. CARE AND CLEANING

WARNING!
Refer to the Safety chapters.

Clean the appliance after each use.
Always use cookware with clean bottom.

WARNING!
Deactivate the appliance. Disconnect the appliance from the electrical supply before you clean or do maintenance work.

Let the gas burner become cool before you clean it.

It is best to clean the electrical cooking zone while it is still warm because you can remove spillage more easily.

WARNING!
Sharp objects and abrasive cleaning agents can damage the appliance.
For your safety, do **not** clean the appliance with steam blasters or high-pressure cleaners.

Scratches or dark stains on the surface have no effect on how the appliance operates.

- You can remove the pan supports to easily clean the hob.
- To clean the enamelled parts, cap and crown, wash them with warm soapy water and dry them carefully before you put them back.
- Wash stainless steel parts with water, and then dry them with a soft cloth.
- The pan supports **are not** dishwasher proof. You must wash them **by hand**.
- When you wash the pan supports by hand, be careful when you dry them as the enamel coating occasionally can have rough edges. If necessary, you can remove stubborn stains with a paste cleaner.
- After you clean the pan supports, make sure that they are in the correct position.
- Make sure that the arms of the pan supports are in the centre of the burner for the burner to operate correctly.

- **To prevent the hob top from damage, be very careful when you replace the pan supports.**

After cleaning, dry the appliance with a soft cloth.

Removing the dirt:

1. – **Remove immediately:** melting plastic, plastic foil, and food containing sugar. Use a special glass ceramic scraper. Put the scraper on the glass ceramic surface at an acute angle and slide the blade on the surface.
   – **Stop the appliance and let it cool down** before you clean: lime-scale rings, water rings, fat stains, shiny metallic discolorations. Use a special cleaner applicable for surface of hob..
2. Clean the appliance with a damp cloth and some detergent.
3. At the end **rub the appliance dry with a clean cloth.**

WARNING!
Do not use knives, scrapers or similar instruments to clean the surface of the glass or between the rims of the burners and the frame (if applicable).

WARNING!
Do not slide cookware over the glass because it could scratch the surface. Also, do not let hard or sharp objects fall onto the glass or hit the edge of the hob.

6.1 Cleaning of the spark plug

This feature is obtained through a ceramic ignition candle with a metal electrode. Keep these components well clean to prevent difficult lighting and check that the burner crown holes are not obstructed.

6.2 Periodic maintenance

Periodically speak your local Service Force Centre to check the conditions of the gas supply pipe and the pressure adjuster, if fitted.

7. TROUBLESHOOTING

Problem	Possible cause	Remedy
There is no spark when lighting the gas.	• There is no electrical supply.	• Make sure that the appliance is connected and the electrical supply is switched on. • Do a check of the fuse. If the fuse is released more than one time, refer to a qualified electrician.
There is no spark when lighting the gas.	• The burner cap and crown are placed unevenly.	• Make sure that the burner cap and crown are in the correct positions.
The flame is blown out immediately after ignition.	• The thermocouple is not heated sufficiently.	• After lightning the flame, keep the knob pushed for approximately 10 seconds.
The gas ring burns unevenly.	• The burner crown is blocked with food residue.	• Make sure that the injector is not blocked and the burner crown is clear of food particles.
The appliance does not operate.	• There is no electrical supply.	• Make sure that the appliance is connected and the electrical supply is switched on. • Do a check of the fuse. If the fuse is released more than one time, refer to a qualified electrician.
The electrical cooking zone does not heat up.	• There is no electrical supply. • The wrong knob is used to operate the cooking zone.	• Make sure that the appliance is connected and the electrical supply is switched on. • Make sure that you turn the correct control knob. • Do a check of the fuse. If the fuse is released more than one time, refer to a qualified electrician.

Problem	Possible cause	Remedy
The effectiveness of the hob is not satisfactory.	• The hob is not clean. • The cookware is not correct.	• Make sure that the hob is clean and dry. • Make sure that the cookware is the correct size for the cooking zone. • Make sure that the cookware has a flat bottom. • Make sure that the heat setting is correct for this type of cooking.

If there is a fault, first try to find a solution to the problem yourself. If you cannot find a solution to the problem yourself, speak your dealer or the local Service Force Centre.

If you operated the appliance incorrectly, or the installation was not carried out by a registered engineer, the visit from the customer service technician or dealer may not take place free of charge, even during the warranty period.

These data are necessary to help you quickly and correctly. These data are available on the supplied rating plate.

- Model description .....
- Product number (PNC) .....
- Serial Number (S.N.) .....

Use the original spare parts only. They are available at Service Force Centre and approved spare parts shops.

7.1 Labels supplied with the accessories bag

Stick the adhesive labels as indicated below:

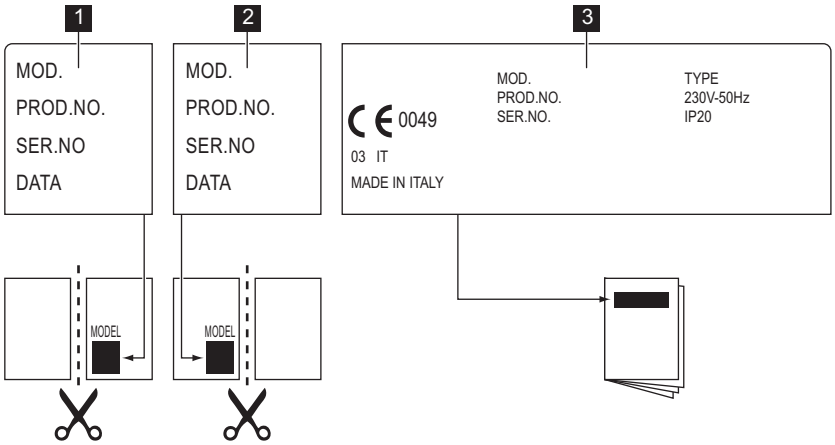

1 Stick it on Guarantee Card and send this part

2 Stick it on Guarantee Card and keep this part

3 Stick it on instruction booklet

8. INSTALLATION

WARNING!
Refer to the Safety chapters.

WARNING!
The following instructions about installation, connection and maintenance must be carried out by qualified personnel in compliance with standards and local regulations in force.

8.1 Gas Connection

Choose fixed connections or use a flexible pipe in stainless steel in compliance with the regulation in force. If you use flexible metallic pipes, be careful they do not come in touch with mobile parts or they are not squeezed. Also be careful when the hob is put together with an oven.

Make sure that the gas supply pressure of the appliance obeys the recommended values. The adjustable connection is fixed to the comprehensive ramp by means of a threaded nut G 1/2". Screw the parts without force, adjust the connection in the necessary direction and tighten everything.

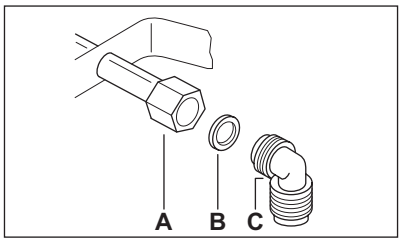

A) End of shaft with nut

B) Washer

C) Elbow

Liquid gas: use the rubber pipe holder. Always engage the gasket. Then continue with the gas connection. The flexible pipe is prepared for apply when:

– it can not get hot more than room temperature, higher than 30°C;
– it is no longer than 1500 mm;
– it shows no throttles;
– it is not subject to traction or torsion;
– it does not get in touch with cutting edges or corners;
– it can be easily examined in order to check its condition.

The control of preservation of the flexible pipe consists in checking that:

– it does not show cracks, cuts, marks of burnings on the two ends and on its full length;
– the material is not hardened, but shows its correct elasticity;
– the fastening clamps are not rusted;
– expired term is not due.

If one or more defects are visible, do not repair the pipe, but replace it.

When installation is complete, make sure that the seal of each pipe fitting is correct. Use a soapy solution, **not a flame**!

8.2 Injectors replacement

1. Remove the pan supports.
2. Remove the caps and crowns of the burner.
3. With a socket spanner 7 remove the injectors and replace them with the ones which are necessary for the type of gas you use (see table in "Technical Information" chapter).
4. Assemble the parts, follow the same procedure backwards.
5. Replace the rating plate (it is near the gas supply pipe) with the one for the new type of gas supply. You can find this plate in the package supplied with the appliance.

If the supply gas pressure is changeable or different from the necessary pressure, you must fit an applicable pressure adjuster on the gas supply pipe.

8.3 Adjustment of minimum level

To adjust the minimum level of the burners:

1. Light the burner.
2. Turn the knob on the minimum position.
3. Remove the knob.

4. With a thin screwdriver, adjust the by-pass screw position.

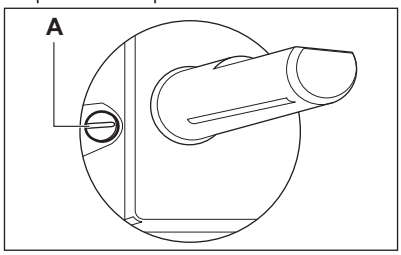

A) The by-pass screw

- If you change from natural gas G20 20 mbar to liquid gas, fully tighten the adjustment screw in.
- If you change from liquid gas to natural gas G20 20 mbar, undo the by-pass screw approximately 1/4 of a turn.

WARNING!
Make sure the flame does not go out when you quickly turn the knob from the maximum position to the minimum position.

8.4 Electrical connection

- Ground the appliance according to safety precautions.
- Make sure that the rated voltage and type of power on the rating plate agree with the voltage and the power of the local power supply.
- This appliance is supplied with a mains cable. It has to be supplied with a correct plug, able to support the load marked on the rating plate. The plug has to be fitted in a correct socket.
- Any electrical component must be installed or replaced by the Service Force Centre technician or qualified service personnel.
- Always use a correctly installed shock-proof socket.
- Make sure that there is an access to the mains plug after installation.
- Do not pull the mains cable to disconnect the appliance. Always pull the mains plug.
- The appliance must not be connected with an extension cable, an adapter or a multiple connection (risk of fire). Check that the ground connection is in conformity with the standard and regulations force.
- The power cable must be placed in such a way that it does not touch any hot part.
- Connect the appliance to the mains with a device that lets to disconnect the appliance from the mains at all poles with a contact opening width of minimum 3 mm, eg. automatic line protecting cut-out, earth leakage trips or fuse.
- None of a parts of the connection cable can not get a temperature 90 °C. The blue neutral cable must be connected to the terminal block label with "N". The brown (or black) phase cable (fitted in the terminal block contact marked with "L") must always be connected to the live phase.

8.5 Replacement of the connection cable

To replace the connection cable use only H05V2V2-F T90 or equivalent type. Make sure that the cable section is applicable to the voltage and the working temperature. The yellow/green earth wire must be approximately 2 cm longer than the brown (or black) phase wire.

8.6 Building In

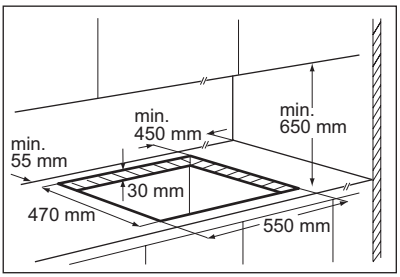

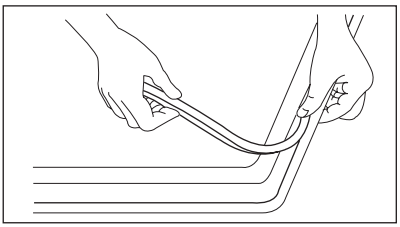

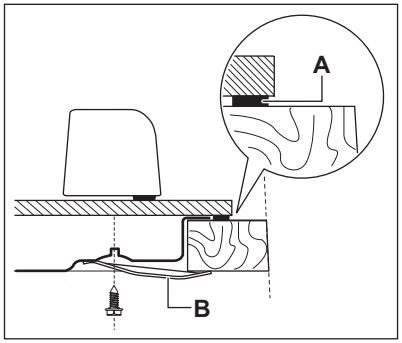

A) supplied seal
B) supplied brackets

CAUTION!
Install the appliance only on a worktop with flat surface.

8.7 Possibilities for insertion

Kitchen unit with door

The panel installed below the hob must be easy to remove and let an easy access in case a technical assistance intervention is necessary.

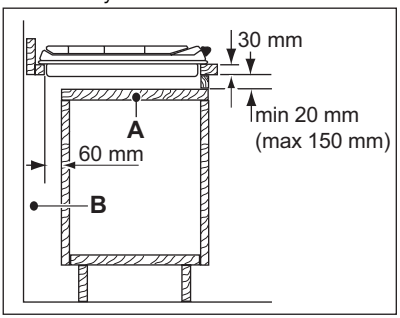

A) Removable panel
B) Space for connections

Kitchen unit with oven

The electrical connection of the hob and the oven must be installed separately for safety reasons and to let easy remove oven from the unit.

9. TECHNICAL INFORMATION

Hob dimensions

Width:	580 mm
Length:	510 mm

Hob recess dimensions

Width:	550 mm
Length:	470 mm

Heat input

Rapid burner:	2.7 kW
Semi-rapid burner:	1.9 kW
Auxiliary burner:	1.0 kW
Electric zone:	1.8 kW

TOTAL GAS POWER:	G20 (2H) 20 mbar = 5.6 kW G30 (3+) 28-30 mbar = 407 g/h G31 (3+) 37 mbar = 400 g/h
TOTAL ELECTRIC POWER:	1.8 kW
Electric supply:	230 V ~ 50 Hz
Gas category:	II2H3+
Gas connection:	G 1/2”
Gas supply:	G20 (2H) 20 mbar
Appliance class:	3

By-pass diameters

Burner	Ø By-pass in 1/100 mm
Auxiliary	28
Semi-rapid	32
Rapid	52

Gas burners for NATURAL GAS G20 20 mbar

BURNER	NORMAL POWER kW	inj. 1/100 mm
Auxiliary	1.0	70
Semi-rapid	1.9	96
Rapid	2.7	130

Gas burners for LPG G30/G31 28-30/37 mbar

BURNER	NORMAL POWER kW	inj. 1/100 mm	G30 28-30 mbar	G31 37 mbar
			g/h	g/h
Auxiliary	1.0	50	73	71
Semi-rapid	1.9	71	138	136
Rapid	2.7	86	196	193

10. ENVIRONMENT CONCERNS

Recycle the materials with the symbol . Put the packaging in applicable containers to recycle it.
Help protect the environment and human health and to recycle waste of electrical and electronic appliances. Do not dispose appliances marked with the symbol with the household waste. Return the product to your local recycling facility or contact your municipal office.

www.electrolux.com/shop

892943907-D-PT-282013