Thinking of you
Electrolux

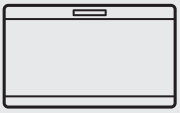

EC1501AOW
EC2201AOW
EC2801AOW
EC3201AOW
EC4201AOW

EN CHEST FREEZER

USER MANUAL

CONTENTS

1. SAFETY INSTRUCTIONS 3
2. PRODUCT DESCRIPTION 5
3. OPERATION 6
4. CONTROL PANEL 6
5. FIRST USE 7
6. DAILY USE 7
7. HELPFUL HINTS AND TIPS 8
8. CARE AND CLEANING 9
9. WHAT TO DO IF... 10
10. INSTALLATION 13
11. NOISES 14
12. TECHNICAL DATA 17

WE'RE THINKING OF YOU

Thank you for purchasing an Electrolux appliance. You've chosen a product that brings with it decades of professional experience and innovation. Ingenious and stylish, it has been designed with you in mind. So whenever you use it, you can be safe in the knowledge that you'll get great results every time.

Welcome to Electrolux.

Visit our website for:

Get usage advice, brochures, trouble shooter, service information:
www.electrolux.com

Register your product for better service:
www.electrolux.com/productregistration

Buy Accessories, Consumables and Original spare parts for your appliance:
www.electrolux.com/shop

CUSTOMER CARE AND SERVICE

We recommend the use of original spare parts.
When contacting Service, ensure that you have the following data available.
The information can be found on the rating plate. Model, PNC, Serial Number.

Warning / Caution-Safety information

General information and tips

Environmental information

Subject to change without notice.

1. ⚠ SAFETY INSTRUCTIONS

In the interest of your safety and to ensure the correct use, before installing and first using the appliance, read this user manual carefully, including its hints and warnings. To avoid unnecessary mistakes and accidents, it is important to ensure that all people using the appliance are thoroughly familiar with its operation and safety features. Save these instructions and make sure that they remain with the appliance if it is moved or sold, so that everyone using it through its life will be properly informed on appliance use and safety.
For the safety of life and property keep the precautions of these user's instructions as the manufacturer is not responsible for damages caused by omission.

1.1 Children and vulnerable people safety

- This appliance is not intended for use by persons (including children) with reduced physical, sensory or mental capabilities, or lack of experience and knowledge, unless they have been given supervision or instruction concerning use of the appliance by a person responsible for their safety.

  Children should be supervised to ensure that they do not play with the appliance.
- Keep all packaging well away from children. There is risk of suffocation.
- If you are discarding the appliance pull the plug out of the socket, cut the connection cable (as close to the appliance as you can) and remove the door to prevent playing children to suffer electric shock or to close themselves into it.
- If this appliance featuring magnetic door seals is to replace an older appliance having a spring lock (latch) on the door or lid, be sure to make that spring lock unusable before you discard the old appliance. This will prevent it from becoming a death trap for a child.

1.2 General safety

⚠ **WARNING!**

Keep ventilation openings, in the appliance enclosure or in the built-in structure, clear of obstruction.

- The appliance is intended for keeping foodstuff and/or beverages in a normal household and similar applications such as:
  - staff kitchen areas in shops, offices and other working environments;
  - farm houses and by clients in hotels, motels and other residential type environments;
  - bed and breakfast type environments;
  - catering and similar non-retail applications.
- Do not use a mechanical device or any artificial means to speed up the thawing process.
- Do not use other electrical appliances (such as ice cream makers) inside of refrigerating appliances, unless they are approved for this purpose by the manufacturer.
- Do not damage the refrigerant circuit.
- The refrigerant isobutane (R600a) is contained within the refrigerant circuit of the appliance, a natural gas with a high level of environmental compatibility, which is nevertheless flammable.

  During transportation and installation of the appliance, be certain that none of the components of the refrigerant circuit become damaged.

  If the refrigerant circuit should become damaged:
  - avoid open flames and sources of ignition
  - thoroughly ventilate the room in which the appliance is situated
- It is dangerous to alter the specifications or modify this product in any way. Any damage to the cord may cause a short-circuit, fire and/or electric shock.

⚠ **WARNING!**
Any electrical component (power cord, plug, compressor) must be replaced by a certified service agent or qualified service personnel to avoid hazard.

1. Power cord must not be lengthened.
2. Make sure that the power plug is not squashed or damaged by the back of the appliance. A squashed or damaged power plug may overheat and cause a fire.
3. Make sure that you can come to the mains plug of the appliance.
4. Do not pull the mains cable.
5. If the power plug socket is loose, do not insert the power plug. There is a risk of electric shock or fire.
6. You must not operate the appliance without the lamp cover (if foreseen) of interior lighting.

- This appliance is heavy. Care should be taken when moving it.
- Do not remove nor touch items from the freezer compartment if your hands are damp/wet, as this could cause skin abrasions or frost/freezer burns.
- Avoid prolonged exposure of the appliance to direct sunlight.
- Bulb lamps (if foreseen) used in this appliance are special purpose lamps selected for household appliances use only. They are not suitable for household room illumination.

1.3 Daily Use

- Do not put hot pot on the plastic parts in the appliance.
- Do not store flammable gas and liquid in the appliance, because they may explode.
- Do not place food products directly against the air outlet on the rear wall. (If the appliance is Frost Free)
- Frozen food must not be re-frozen once it has been thawed out.
- Store pre-packed frozen food in accordance with the frozen food manufacturer's instructions.
- Appliance's manufacturers storage recommendations should be strictly adhered to. Refer to relevant instructions.
- Do not place carbonated or fizzy drinks in the freezer compartment as it creates pressure on the container, which may cause it to explode, resulting in damage to the appliance.
- Ice lollies can cause frost burns if consumed straight from the appliance.

1.4 Care and cleaning

- Before maintenance, switch off the appliance and disconnect the mains plug from the mains socket.
- Do not clean the appliance with metal objects.
- Do not use sharp objects to remove frost from the appliance. Use a plastic scraper.

1.5 Installation



For electrical connection carefully follow the instructions given in specific paragraph.

- Unpack the appliance and check if there are damages on it. Do not connect the appliance if it is damaged. Report possible damages immediately to the place you bought it. In that case retain packing.
- It is advisable to wait at least four hours before connecting the appliance to allow the oil to flow back in the compressor.
- Adequate air circulation should be around the appliance, lacking this leads to overheating. To achieve sufficient ventilation follow the instructions relevant to installation.
- The appliance must not be located close to radiators or cookers.
- Make sure that the mains plug is accessible after the installation of the appliance.

1.6 Service

- Any electrical work required to do the servicing of the appliance should be carried out by a qualified electrician or competent person.
- This product must be serviced by an authorized Service Centre, and only genuine spare parts must be used.

1.7 Environment Protection



This appliance does not contain gasses which could damage the ozone layer, in either its refrigerant

circuit or insulation materials. The appliance shall not be discarded together with the urban refuse and rubbish. The insulation foam contains flammable gases: the appliance shall be disposed according to the applicable regulations to obtain from your local authorities. Avoid damaging the cooling unit, especially at the rear near the heat exchanger. The materials used on this appliance marked by the symbol ♺ are recyclable.

2. PRODUCT DESCRIPTION

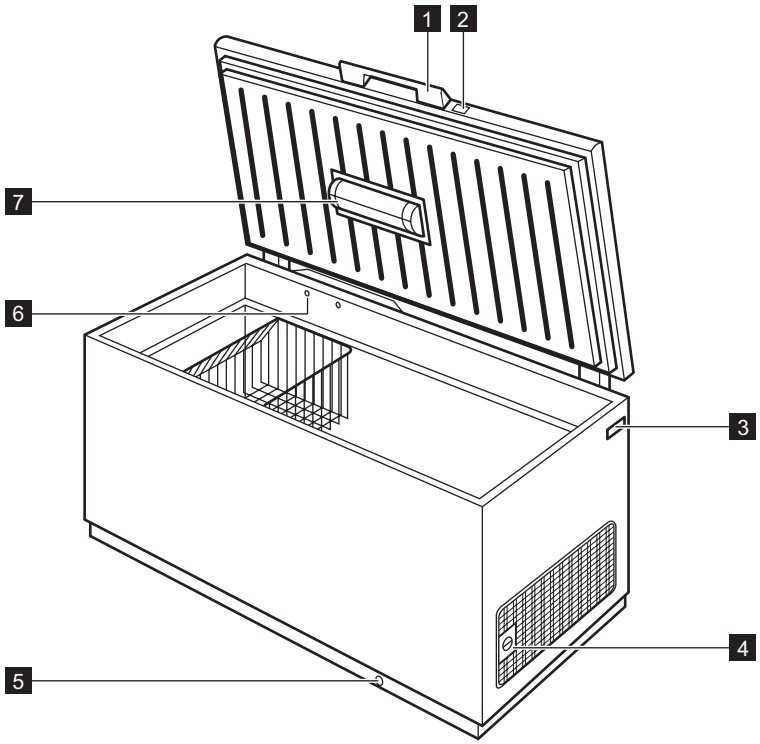

1 Lid handle	5 Defrost water drain
2 Lock	6 Valve:easy re-opening of lid
3 Rating plate	7 Light
4 Temperature regulator	

3. OPERATION

3.1 Switching on

Insert the plug into the wall socket.
The pilot light will light up.
Turn the Temperature regulator clockwise to a medium setting.

If the temperature inside the appliance is too high the Alarm light will light up.

3.2 Switching off

To switch off the appliance remove the main plug.

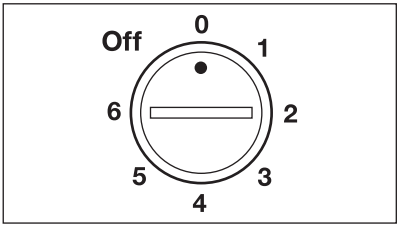

3.3 Temperature regulation

The temperature is automatically regulated.

To operate the appliance, proceed as follows:

- turn the Temperature regulator towards lower settings to obtain the minimum coldness.
- turn the Temperature regulator towards higher settings to obtain the maximum coldness.

A medium setting is generally the most suitable.

However, the exact setting should be chosen keeping in mind that the temperature inside the appliance depends on:

- room temperature
- how often the lid is opened
- the quantity of food stored
- the location of the appliance.

4. CONTROL PANEL

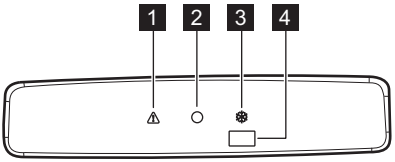

1 High temperature alarm light
2 Pilot light
3 Action Freeze light
4 Action Freeze switch and Alarm reset

4.1 Action Freeze function

You can activate the Action Freeze function by pressing the Action Freeze switch.
The Action Freeze light will light up.
This function stops automatically after 52 hours.
It is possible to deactivate the function at any time by pressing Action Freeze switch. The Action Freeze light will switch off.

4.2 High temperature alarm

An increase in the temperature in the freezer (for example due to an power failure) is indicated by:

- switching on of the Alarm light
- sounding of buzzer.

During the alarm phase, the buzzer can be switched off by pressing the Alarm reset switch.
During the alarm phase, don't place food inside the freezer.
When normal conditions are restored the Alarm light will switch off automatically.

5. FIRST USE

5.1 Cleaning the interior

Before using the appliance for the first time, wash the interior and all internal accessories with lukewarm water and some neutral soap so as to remove the typical smell of a brand-new product, then dry thoroughly.

Do not use detergents or abrasive powders, as these will damage the finish.

6. DAILY USE

6.1 Freezing fresh food

The freezer compartment is suitable for freezing fresh food and storing frozen and deep-frozen food for a long time.
To freeze fresh food activate the Action Freeze function at least 24 hours before placing the food to be frozen in the freezer compartment.
The maximum amount of food that can be frozen in 24 hours is specified on the **rating plate** [1)]
The freezing process lasts 24 hours: during this period do not add other food to be frozen.

6.2 Storage of frozen food

When first starting-up or after a period out of use, before putting the products in the compartment let the appliance run at least 2 hours on the higher settings.

In the event of accidental defrosting, for example due to a power failure, if the power has been off for longer than the value shown in the technical characteristics chart under "rising time", the defrosted food must be consumed quickly or cooked immediately and then re-frozen (after cooling).

1) Refer to "Technical data"

6.3 Opening and closing the lid

As the lid is equipped with a tightly closing seal, it is not easy to reopen it shortly after closing (due to the vacuum formed inside).
Wait a few minutes before reopening the appliance. The vacuum valve will help you to open the lid.

WARNING!
Never pull the handle with immense force.

6.4 Storage baskets

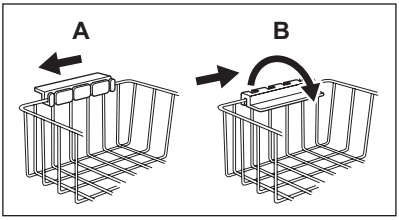

Hang the baskets on the upper edge of the freezer (A) or place them inside the freezer (B). Turn and fix the handles for these two positions as shown in the picture.

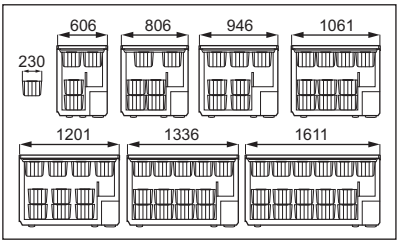

The baskets will slide into each other. The following pictures show how many baskets can be placed inside the various freezer models.
You can purchase additional baskets from your local Service Centre.

6.5 Security lock

The freezer is equipped with a special lock in order to avoid accidental locking. The lock is designed in such manner that you can turn the key and thus close the lid only if you previously push the key into the lock.
In order to close the freezer do these steps:

1. push the key into the lock gently.
2. turn the key clockwise towards the symbol .

In order to open the freezer do these steps:

1. push the key into the lock gently.
2. turn the key counter-clockwise towards the symbol .

Spare keys are available at the local Service Centre.

WARNING!
Keep the key well away from children.
Make sure to remove the key from the lock before you discard the old appliance.

7. HELPFUL HINTS AND TIPS

7.1 Hints for freezing

To help you make the most of the freezing process, here are some important hints:

- the maximum quantity of food which can be frozen in 24 hrs. is shown on the rating plate;
- the freezing process takes 24 hours. No further food to be frozen should be added during this period;
- only freeze top quality, fresh and thoroughly cleaned, foodstuffs;
- prepare food in small portions to enable it to be rapidly and completely frozen and to make it possible subsequently to thaw only the quantity required;
- wrap up the food in aluminium foil or polythene and make sure that the packages are airtight;
- do not allow fresh, unfrozen food to touch food which is already frozen, thus avoiding a rise in temperature of the latter;

- lean foods store better and longer than fatty ones; salt reduces the storage life of food;
- water ices, if consumed immediately after removal from the freezer compartment, can possibly cause the skin to be freeze burnt;
- it is advisable to show the freezing in date on each individual pack to enable you to keep tab of the storage time.

7.2 Hints for storage of frozen food

To obtain the best performance from this appliance, you should:

- make sure that the commercially frozen foodstuffs were adequately stored by the retailer;
- be sure that frozen foodstuffs are transferred from the foodstore to the freezer in the shortest possible time;
- not open the lid frequently or leave it open longer than absolutely necessary.
- Once defrosted, food deteriorates rapidly and cannot be refrozen.
- Do not exceed the storage period indicated by the food manufacturer.

8. CARE AND CLEANING

CAUTION!
Unplug the appliance before carrying out any maintenance operation.

This appliance contains hydrocarbons in its cooling unit; maintenance and recharging must therefore only be carried out by authorized technicians.

8.1 Periodic cleaning

1. Switch off the appliance.
2. Disconnect the mains plug from the mains socket.
3. Regularly clean the appliance and the accessories with warm water and neutral soap. Clean the lid seal carefully.
4. Fully dry the appliance.
5. Connect the mains plug to the mains socket.
6. Switch on the appliance.

CAUTION!
Do not use detergents, abrasive products, highly perfumed cleaning products or wax polishes to clean the inner side of the appliance.
Prevent damage to the cooling system.

There is no need to clean the compressor area.

Many proprietary kitchen surface cleaners contain chemicals that can attack/damage the plastics used in this appliance. For this reason it is recommended that the outer casing of this appliance is only cleaned with warm water with a little washing-up liquid added.

8.2 Defrosting the freezer

Defrost the freezer when the frost layer reaches a thickness of about 10-15 mm. The best time to defrost the freezer when it contains no or only a little food.
To remove the frost, do these steps:

1. Switch off the appliance.
2. Remove any stored food, wrap it in several layers of newspaper and put it in a cool place.
3. Leave the lid open , remove the plug from the defrost water drain and collect all defrost water on a tray. Use a scraper to remove ice quickly.
4. When defrosting is completed, dry the interior thoroughly and refit the plug.
5. Switch on the appliance.
6. Set the temperature regulator to obtain the maximum coldness and run the appliance for two or three hours using this setting.

7. Reload the previously removed food into the compartment.

Never use sharp metal tools to scrape off frost as you could damage the appliance. Do not use a mechanical device or any artificial means to speed up the thawing process other than those recommended by the manufacturer. A temperature rise of the frozen food packs, during defrosting, may shorten their safe storage life. The amount of frost on the walls of the appliance will be increased by the high level of the outer environment humidity and if the frozen food is not wrapped properly.

8.3 Periods of non-operation

When the appliance is not in use for long periods, take the following precautions:

1. Switch off the appliance.
2. Disconnect the mains plug from the mains socket.
3. Remove all food.
4. Defrost and clean the appliance and all accessories.
5. Leave the lid open to prevent unpleasant smells.

If the cabinet will be kept on, ask somebody to check it once in a while to prevent the food inside from spoiling in case of a power failure.

9. WHAT TO DO IF…

CAUTION!
Before troubleshooting, disconnect the power supply.
Only a qualified electrician or competent person must do the troubleshooting that is not in this manual.

There are some sounds during normal use (compressor, refrigerant circulation).

Problem	Possible cause	Solution
The appliance is noisy.	The appliance is not supported properly.	Check if the appliance stands stable (all the four feet should be on the floor).
The compressor operates continually.	The temperature is not set correctly.	Set a warmer temperature.
	The lid has been opened too frequently.	Do not leave the lid open longer than necessary.
	The lid is not closed properly.	Check if the lid closes well and the gaskets are undamaged and clean.
	Large quantities of food to be frozen were put in at the same time.	Wait some hours and then check the temperature again.
	Food placed in the appliance was too warm.	Allow food to cool to room temperature before storing.

Problem	Possible cause	Solution
	The temperature of the room that contains the appliance is too high for efficient operation.	Try to reduce the temperature in the room where the appliance stands.
The High temperature alarm light is on.	It is too warm inside the freezer.	Refer to "High Temperature Alarm".
	The cabinet has been recently switched on and the temperature is still too high.	Refer to "High Temperature Alarm".
There is too much frost and ice.	Products are not wrapped properly.	Wrap the products better.
	The lid is not shut properly or do not close tightly.	Check if the lid closes well and the gaskets are undamaged and clean.
	The temperature is not set correctly.	Set a warmer temperature.
	The water drainage plug is not correctly positioned.	Position the water drainage plug in the correct way.
The lid doesn't close completely.	There is excessive frost.	Eliminate excess frost.
	The lid gaskets are dirty or sticky.	Clean the lid gaskets.
	Food packages are blocking the lid.	Arrange the packages in the right way, see the sticker in the appliance.
The lid is difficult to open.	The lid gaskets are dirty or sticky.	Clean the lid gaskets.
	The valve is blocked.	Check the valve.
The lamp does not work.	The lamp is defective.	Refer to "Replacing the lamp".
It is too warm in the freezer.	The temperature is not set correctly.	Set a lower temperature.
	The lid does not close tightly or it is not shut properly.	Check if the lid closes well and the gasket is undamaged and clean.
	Before freezing the appliance was not precooled sufficiently.	Pre-cool the appliance for enough time.

Problem	Possible cause	Solution
	Large quantities of food to be frozen were put in at the same time.	Wait some hours and then check the temperature again. Next time insert smaller quantities of food to be frozen at any one time.
	Food placed in the appliance was too warm.	Allow food to cool to room temperature before storing.
	Products to be frozen are placed too closely to each other.	Place the products in a way so that cold air could circulate among them.
	The lid has been opened often.	Try to not open the lid often.
	The lid has been opened for a long time.	Do not leave the lid open longer than necessary.
It is too cold inside the freezer.	The temperature is not set correctly.	Set a warmer temperature.
The appliance does not work at all. Neither cooling nor lighting works.	Plug is not connected to the mains socket properly.	Connect the mains plug properly.
	Power does not reach the appliance.	Try connecting another electrical device to the power outlet.
	The appliance is not switched on.	Switch on the appliance.
	There is no voltage in the mains socket (try to connect another appliance into it).	Call an electrician.

9.1 Customer Service

If your appliance is still not working properly after making the above checks, contact the nearest service centre.
To obtain fast service, it is essential that when you apply for it you specify the model and serial number of your appliance which can be found either on the guarantee certificate or on the rating plate located on the external right side of the appliance.

9.2 Replacing the lamp

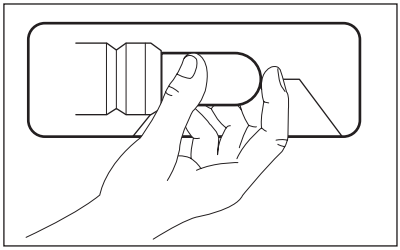

1. Disconnect the mains plug from the mains socket.
2. Replace the used lamp with a new lamp of the same power and specifically designed for household appliances. (the maximum power is shown on the lamp cover)
3. Connect the mains plug to the mains socket.
4. Open the lid. Make sure that the lamp comes on.

WARNING!
Do not remove the lamp cover at the time of replacement.
Do not operate the freezer if the lamp cover is damaged or missing.

10. INSTALLATION

10.1 Positioning

WARNING!
If you are discarding an old appliance that has a lock or catch on the lid, you must ensure that it is made unusable to prevent young children being trapped inside.

The appliance shall have the plug accessible after installation.

This appliance can be installed in a dry, well ventilated indoor (garage or cellar), but for optimum performance install this appliance at a location where the ambient temperature corresponds to the climate class indicated on the rating plate of the appliance:

Climate class	**Ambient temperature**
SN	+10°C to + 32°C
N	+16°C to + 32°C
ST	+16°C to + 38°C
T	+16°C to + 43°C

10.2 Electrical Connection

CAUTION!
Any electrical work required to install this appliance should be carried out by a qualified electrician or competent person.

WARNING!
This appliance must be earthed. The manufacturer declines any liability should these safety measures not be observed.

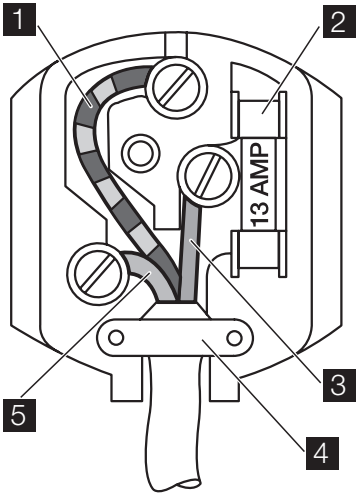

The wires in the mains lead are coloured in accordance with the following code:

1	Green and Yellow:	Earth
3	Brown:	Live
5	Blue:	Neutral

As the colours of the wires in the mains lead of this appliance may not correspond with the coloured markings identifying the terminals in your plug, proceed as follows:

1. Connect the wire coloured green and yellow to the terminal marked either with the letter “E“ or by the earth symbol ⏚ or coloured green and yellow.
2. Connect the wire coloured blue to the terminal either marked with the letter “N“ or coloured black.
3. Connect the wire coloured brown to the terminal either marked with the “L“ or coloured red.
4. Check that no cut, or stray strands of wire is present and the cord clamp 4 is secure over the outer sheath.
5. Make sure the electricity supply voltage is the same as that indicated on the appliance rating plate.
6. Switch on the appliance.

The appliance is supplied with a 13 amp plug fitted 2 . In the event of having to change the fuse in the plug supplied, a 13 amp ASTA approved (BS 1362) fuse must be used.

WARNING!
A cut off plug inserted into a 13 amp socket is a serious safety (shock) hazard. Ensure that it is disposed of safely.

10.3 Ventilation requirements

1. Put the freezer in horizontal position on a firm surface. The cabinet must be on all four feet.
2. Make sure that the clearance between the appliance and rear wall is 5 cm.
3. Make sure that the clearance between the appliance and the sides is 5 cm.

The airflow behind the appliance must be sufficient.

11. NOISES

There are some sounds during normal running (compressor, refrigerant circulation).

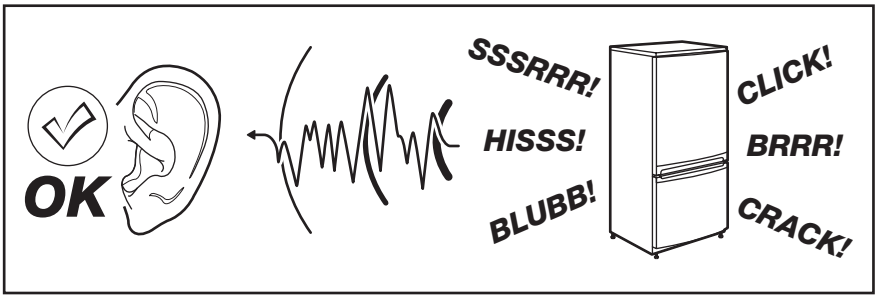
OK
SSSRRR!
HISSS!
BLUBB!
CLICK!
BRRR!
CRACK!

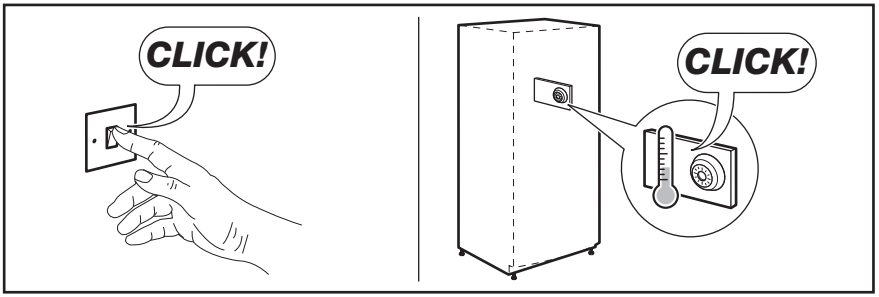
CLICK!
CLICK!

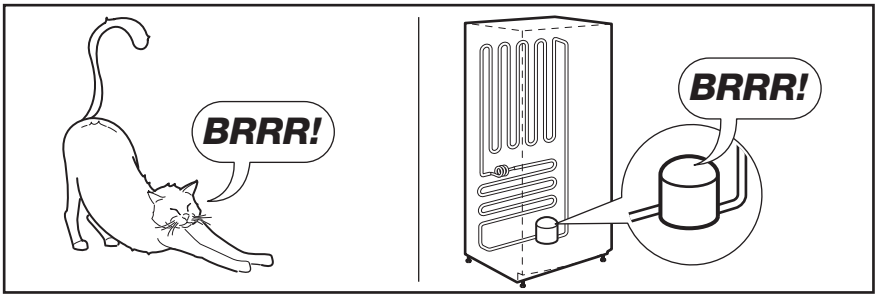
BRRR!
BRRR!

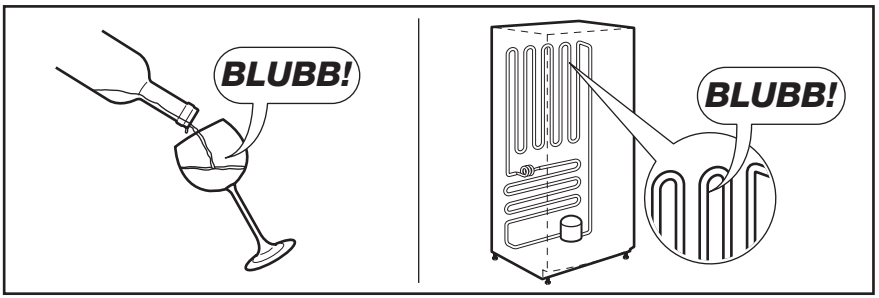
BLUBB!
BLUBB!

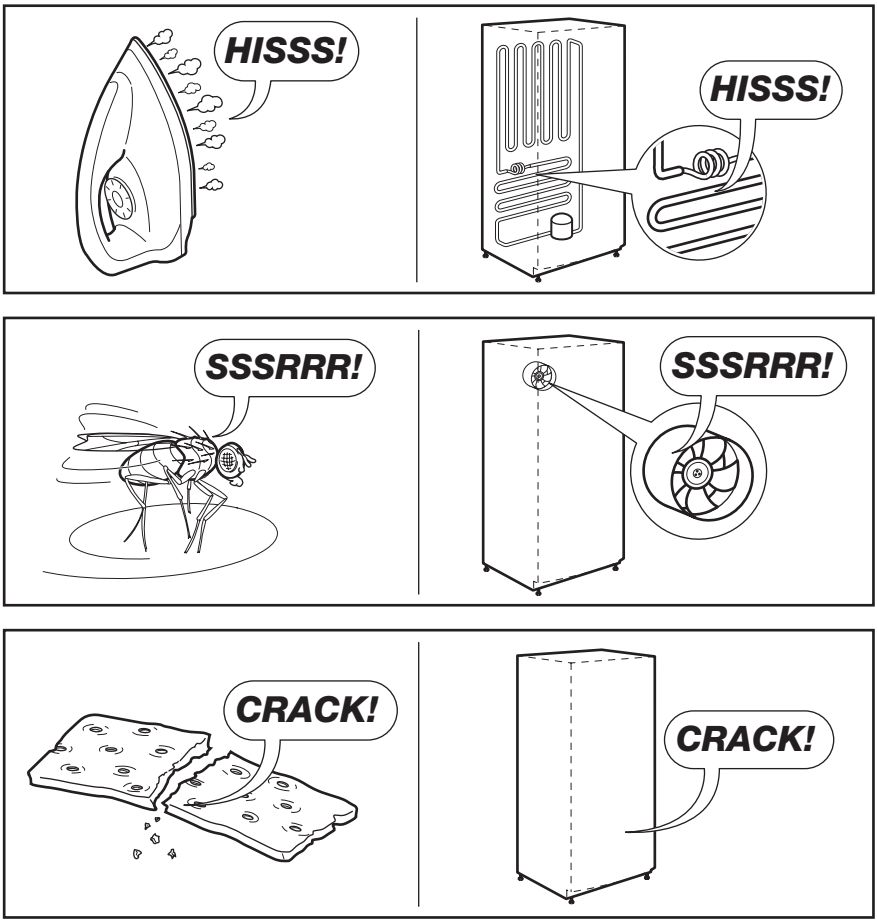
HISSS!
HISSS!
SSSRRR!
SSSRRR!
CRACK!
CRACK!

12. TECHNICAL DATA

		EC1501A OW	EC2201A OW	EC2801A OW	EC3201A OW	EC4201A OW
Dimension of the recess						
	Height	876 mm	876 mm	876 mm	876 mm	876 mm
	Width	595 mm	795 mm	935 mm	1050 mm	1325 mm
	Depth	665 mm	665 mm	665 mm	665 mm	665 mm
Rising Time		25 h	28 h	32 h	32 h	31 h

The technical information are situated in the rating plate on the external right side of the appliance and in the energy label.

13. ENVIRONMENT CONCERNS

Recycle the materials with the symbol . Put the packaging in applicable containers to recycle it.
Help protect the environment and human health and to recycle waste of electrical and electronic appliances. Do not dispose appliances marked with the symbol with the household waste. Return the product to your local recycling facility or contact your municipal office.

www.electrolux.com/shop



804180495-UK-032013