SWS98820L0 Refrigerator



Perfectly stored and served wine

This wine cabinet has two separately controlled sections providing the perfect temperatures for both serving and storing wine in one single appliance.

The perfect humidity for preserving your wine

This wine cabinet has been designed to maintain a dedicated humidity level for your wine, in order to prevent the corks from drying out.



Safe storage for protecting your wines

The glass door of this wine compartment has been coated with a UV filter. As a result, your wines are safely protected from light damage.

More Benefits :

• Anti-vibration system to protect your wine from harmful vibration

• Electronic digital controls for control over storage conditions

Features :

• Large capacity fresh food storage space
•Dynamic air technology
• None energy rating
•Door hinge on left
• 169 litre gross fridge capacity
•Electronic temperature controls with digital LED display
•CFC &HFC-free and environmentally friendly
•Interior light
•Built in refrigerator
•Drawers : 1, Full width transpar. plast
•Automatic evaporator
•Door open indicator
•Coolmatic
•Shelves for storage : 6 Full Width
•Climate class: SN-N-ST
•Auto fridge defrost
• 39 dB(A) noise level
•Precision cooling system

Technical Specs :

• Product Number Code : 949 082 390
•Bar Code : 7332543109258
•Energy class : B
•Built In Width (mm) : 560
•Built In Height (mm) : 880
•Built In Depth (mm) : 550
•Height (mm) : 873
•Width (mm) : 548
•Depth (mm) : 545
•Annual energy consumption (kWh) : 145
•Net capacity refrigerator (l) : 149
•Net capacity star compartment (l) : 0
•Voltage : 220-240
•Net Weight : 48

Product Description :

In-column stainless steel Wine Cooler with dual temperature regulation for red and white wines.

SWS98820L0 Refrigerator

AARE060D000003

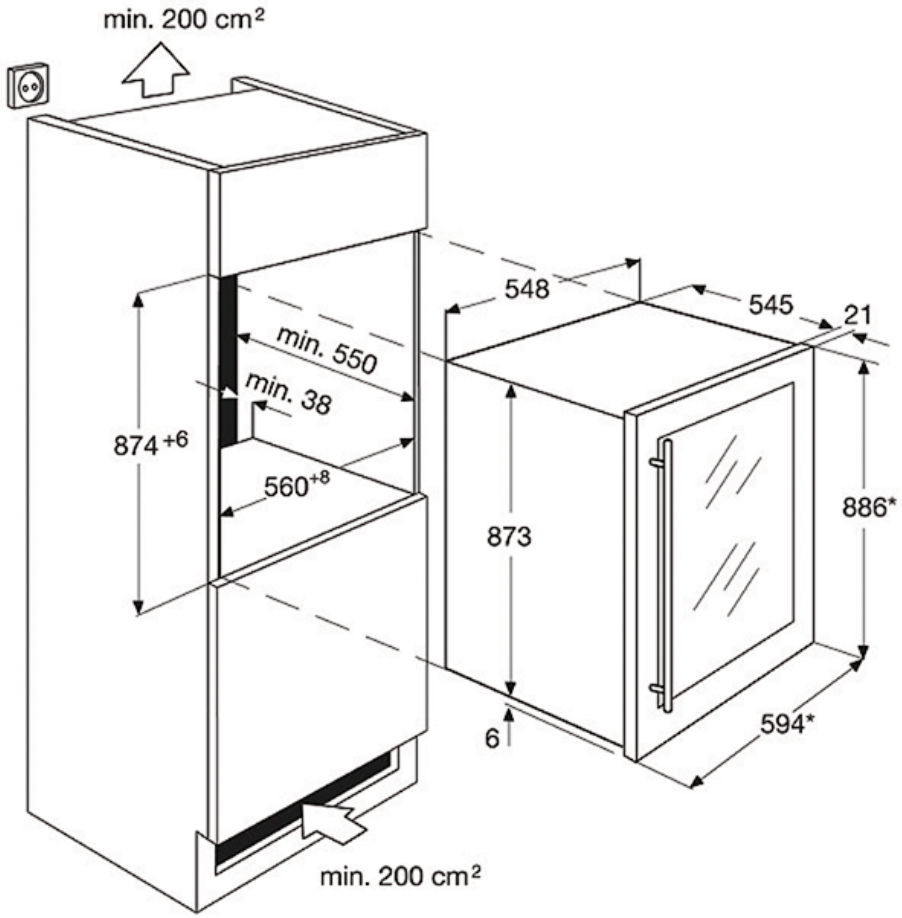

*** Türabmessungen**