FQ53B
FQ53N
FQ53X
ROB2100AOK
ROB2100AOW



EN Oven

User Manual

Electrolux

CONTENTS

1. SAFETY INFORMATION....3
2. SAFETY INSTRUCTIONS....4
3. PRODUCT DESCRIPTION....6
4. BEFORE FIRST USE....7
5. DAILY USE....7
6. CLOCK FUNCTIONS....8
7. USING THE ACCESSORIES....8
8. ADDITIONAL FUNCTIONS....9
9. HINTS AND TIPS....9
10. CARE AND CLEANING....15
11. TROUBLESHOOTING....17
12. INSTALLATION....18
13. ENERGY EFFICIENCY....19

WE'RE THINKING OF YOU

Thank you for purchasing an Electrolux appliance. You've chosen a product that brings with it decades of professional experience and innovation. Ingenious and stylish, it has been designed with you in mind. So whenever you use it, you can be safe in the knowledge that you'll get great results every time.
Welcome to Electrolux.
Visit our website for:



Get usage advice, brochures, trouble shooter, service information:
www.electrolux.com/webselfservice



Register your product for better service:
www.registerelectrolux.com



Buy Accessories, Consumables and Original spare parts for your appliance:
www.electrolux.com/shop

CUSTOMER CARE AND SERVICE

Always use original spare parts.
When contacting our Authorised Service Centre, ensure that you have the following data available: Model, PNC, Serial Number.
The information can be found on the rating plate.

⚠ Warning / Caution-Safety information

ⓘ General information and tips

Environmental information

Subject to change without notice.

1. ⚠ SAFETY INFORMATION

Before the installation and use of the appliance, carefully read the supplied instructions. The manufacturer is not responsible for any injuries or damages that are the result of incorrect installation or usage. Always keep the instructions in a safe and accessible location for future reference.

1.1 Children and vulnerable people safety

- This appliance can be used by children aged from 8 years and above and persons with reduced physical, sensory or mental capabilities or lack of experience and knowledge if they have been given supervision or instruction concerning the use of the appliance in a safe way and understand the hazards involved.
- Do not let children play with the appliance.
- Keep all packaging away from children and dispose of it appropriately.
- Keep children and pets away from the appliance when it operates or when it cools down. Accessible parts are hot.
- If the appliance has a child safety device, this should be activated.
- Children shall not carry out cleaning and user maintenance of the appliance without supervision.
- Children aged 3 years and under must be kept away from this appliance when it is in operation at all times.

1.2 General Safety

- Only a qualified person must install this appliance and replace the cable.
- WARNING: The appliance and its accessible parts become hot during use. Care should be taken to avoid touching heating elements. Children less than 8 years of age shall be kept away unless continuously supervised.

- Always use oven gloves to remove or put in accessories or ovenware.
- Before maintenance cut the power supply.
- Ensure that the appliance is switched off before replacing the lamp to avoid the possibility of electric shock.
- Do not use a steam cleaner to clean the appliance.
- Do not use harsh abrasive cleaners or sharp metal scrapers to clean the glass door since they can scratch the surface, which may result in shattering of the glass.
- If the mains power supply cable is damaged, it must be replaced by the manufacturer, its Authorised Service Centre or similarly qualified persons to avoid an electrical hazard.

2. SAFETY INSTRUCTIONS

2.1 Installation

WARNING!
Only a qualified person must install this appliance.

- Remove all the packaging.
- Do not install or use a damaged appliance.
- Follow the installation instruction supplied with the appliance.
- Always take care when moving the appliance as it is heavy. Always use safety gloves and enclosed footwear.
- Do not pull the appliance by the handle.
- Keep the minimum distance from the other appliances and units.
- Make sure that the appliance is installed below and adjacent safe structures.
- The sides of the appliance must stay adjacent to appliances or to units with the same height.
- The appliance is equipped with an electric cooling system. It must be operated with the electric power supply.

2.2 Electrical connection

WARNING!
Risk of fire and electrical shock.

- All electrical connections should be made by a qualified electrician.
- The appliance must be earthed.
- Make sure that the electrical information on the rating plate agrees with the power supply. If not, contact an electrician.
- Always use a correctly installed shockproof socket.
- Do not use multi-plug adapters and extension cables.
- Make sure not to cause damage to the mains plug and to the mains cable. Should the mains cable need to be replaced, this must be carried out by our Authorised Service Centre.
- Do not let mains cables touch or come near the appliance door, especially when the door is hot.
- The shock protection of live and insulated parts must be fastened in such a way that it cannot be removed without tools.

- Connect the mains plug to the mains socket only at the end of the installation. Make sure that there is access to the mains plug after the installation.
- If the mains socket is loose, do not connect the mains plug.
- Do not pull the mains cable to disconnect the appliance. Always pull the mains plug.
- Use only correct isolation devices: line protecting cut-outs, fuses (screw type fuses removed from the holder), earth leakage trips and contactors.
- The electrical installation must have an isolation device which lets you disconnect the appliance from the mains at all poles. The isolation device must have a contact opening width of minimum 3 mm.
- This appliance complies with the E.E.C. Directives.

2.3 Use

WARNING!
Risk of injury, burns and electrical shock or explosion.

- This appliance is for household use only.
- Do not change the specification of this appliance.
- Make sure that the ventilation openings are not blocked.
- Do not let the appliance stay unattended during operation.
- Deactivate the appliance after each use.
- Be careful when you open the appliance door while the appliance is in operation. Hot air can release.
- Do not operate the appliance with wet hands or when it has contact with water.
- Do not apply pressure on the open door.
- Do not use the appliance as a work surface or as a storage surface.
- Open the appliance door carefully. The use of ingredients with alcohol can cause a mixture of alcohol and air.
- Do not let sparks or open flames to come in contact with the appliance when you open the door.
- Do not put flammable products or items that are wet with flammable products in, near or on the appliance.

WARNING!
Risk of damage to the appliance.

- To prevent damage or discoloration to the enamel:
  - do not put ovenware or other objects in the appliance directly on the bottom.
  - do not put aluminium foil directly on the bottom of the appliance.
  - do not put water directly into the hot appliance.
  - do not keep moist dishes and food in the appliance after you finish the cooking.
  - be careful when you remove or install the accessories.
- Discoloration of the enamel has no effect on the performance of the appliance.
- Use a deep pan for moist cakes. Fruit juices cause stains that can be permanent.
- This appliance is for cooking purposes only. It must not be used for other purposes, for example room heating.
- Always cook with the oven door closed.
- If the appliance is installed behind a furniture panel (e.g. a door) make sure the door is never closed when the appliance is in operation. Heat and moisture can build up behind a closed furniture panel and cause subsequent damage to the appliance, the housing unit or the floor. Do not close the furniture panel until the appliance has cooled down completely after use.

2.4 Care and cleaning

WARNING!
Risk of injury, fire, or damage to the appliance.

- Before maintenance, deactivate the appliance and disconnect the mains plug from the mains socket.
- Make sure the appliance is cold. There is the risk that the glass panels can break.
- Replace immediately the door glass panels when they are damaged. Contact the Authorised Service Centre.
- Be careful when you remove the door from the appliance. The door is heavy!
- Clean regularly the appliance to prevent the deterioration of the surface material.
- Clean the appliance with a moist soft cloth. Only use neutral detergents. Do not use any abrasive products, abrasive cleaning pads, solvents or metal objects.
- If you use an oven spray, obey the safety instructions on the packaging.
- Do not clean the catalytic enamel (if applicable) with any kind of detergent.

2.5 Internal light

- The type of light bulb or halogen lamp used for this appliance is only for household appliances. Do not use it for house lighting.

WARNING!
Risk of electrical shock.

- Before replacing the lamp, disconnect the appliance from the power supply.
- Only use lamps with the same specifications.

2.6 Disposal

WARNING!
Risk of injury or suffocation.

- Disconnect the appliance from the mains supply.
- Cut off the mains electrical cable close to the appliance and dispose of it.
- Remove the door catch to prevent children or pets from becoming trapped in the appliance.

2.7 Service

- To repair the appliance contact an Authorised Service Centre.
- Use original spare parts only.

3. PRODUCT DESCRIPTION

3.1 General overview

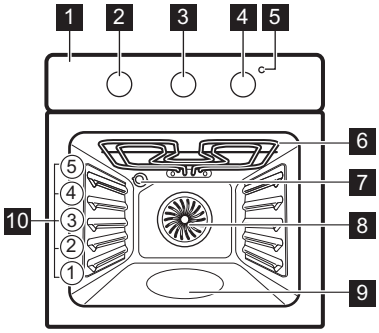

1 Control panel
2 Knob for the oven functions
3 Knob for the timer
4 Knob for the temperature
5 Temperature indicator / symbol
6 Heating element
7 Lamp
8 Fan
9 Aqua cleaning container
10 Shelf positions

3.2 Accessories

- **Wire shelf**
  For cookware, cake tins, roasts.
- **Grill- / Roasting pan**
  To bake and roast or as pan to collect fat.

4. BEFORE FIRST USE

WARNING!
Refer to Safety chapters.

4.1 Initial Cleaning

Remove all accessories from the appliance.

Refer to "Care and cleaning" chapter.

Clean the appliance and the accessories before first use.

Put the accessories back to their initial position.

4.2 Preheating

Preheat the empty appliance to burn off the remaining grease.

1. Set the function and the maximum temperature.
2. Let the appliance operate for 1 hour.
3. Set the function and set the maximum temperature.
4. Let the appliance operate for 15 minutes.

Accessories can become hotter than usual. The appliance can emit an odour and smoke. This is normal. Make sure that the airflow in the room is sufficient.

5. DAILY USE

WARNING!
Refer to Safety chapters.

5.1 Activating and deactivating the appliance

It depends on the model if your appliance has lamps, knob symbols or indicators:

- The lamp comes on when the appliance operates.
- The symbol shows whether the knob controls the oven functions or the temperature.
- The indicator comes on when the oven heats up.

1. Turn the knob for the oven functions to select an oven function.
2. Turn the knob for the temperature to select a temperature.
3. To deactivate the appliance turn the knobs for the oven functions and temperature to the off position.

5.2 Oven Functions

Oven function		Application
0	Off position	The appliance is off.

Oven function		Application
	Top / Bottom Heat / Aqua Cleaning	To bake and roast food on one shelf position. For more information about Aqua Cleaning, refer to the chapter "Care and cleaning".
	Fan Cooking	To roast or roast and bake food with the same cooking temperature on more than one shelf position, without flavour transference.
	Grilling	To grill flat food and to toast bread.
	Fast Grilling	To grill flat food in large quantities and to toast bread.
	Pizza Setting	To bake food on one shelf position for a more intensive browning and a crispy bottom. Set the temperature 20 - 40 °C lower than for Top / Bottom Heat.

6. CLOCK FUNCTIONS

6.1 Minute Minder

Use it to set a countdown time for an oven function.

This function has no effect on the operation of the appliance.

1. Set an oven function and the temperature.
2. Turn the knob for the timer as far as it goes, then turn it to necessary time period.

After the time period is completed, an acoustic signal sounds.

7. USING THE ACCESSORIES

WARNING!
Refer to Safety chapters.

7.1 Inserting the accessories

Wire shelf:

Push the shelf between the guide bars of the shelf support and make sure that the feet point down.

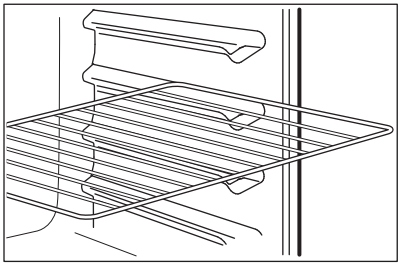

Deep pan:

Push the deep pan between the guide bars of the shelf support.

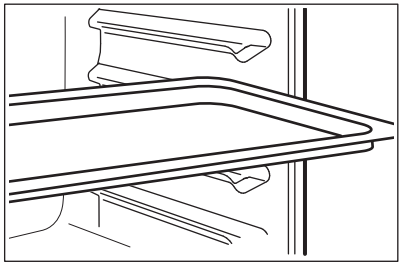

8. ADDITIONAL FUNCTIONS

8.1 Cooling fan

When the appliance operates, the cooling fan activates automatically to keep the surfaces of the appliance cool. If you deactivate the appliance, the cooling fan can continue to operate until the appliance cools down.

8.2 Safety thermostat

Incorrect operation of the appliance or defective components can cause dangerous overheating. To prevent this, the oven has a safety thermostat which interrupts the power supply. The oven activates again automatically when the temperature drops.

9. HINTS AND TIPS

WARNING!
Refer to Safety chapters.

The temperature and baking times in the tables are guidelines only. They depend on the recipes and the quality and quantity of the ingredients used.

9.1 General information

- The appliance has five shelf positions. Count the shelf positions from the bottom of the appliance floor.
- The appliance has a special system which circulates the air and constantly recycles the steam. With this system you can cook in a steamy environment and keep the food soft inside and crusty outside. It decreases the cooking time and energy consumption to a minimum.
- Moisture can condense in the appliance or on the door glass panels. This is normal. Always stand back from the appliance when you open the appliance door while cooking. To decrease the condensation, operate the appliance for 10 minutes before cooking.
- Clean the moisture after each use of the appliance.
- Do not put the objects directly on the appliance floor and do not put aluminium foil on the components when you cook. This can change the baking results and cause damage to the enamel.

9.2 Baking cakes

- Do not open the oven door before 3/4 of the set cooking time is up.
- If you use two baking trays at the same time, keep one empty level between them.

9.3 Cooking meat and fish

- Use a deep pan for very fatty food to prevent the oven from stains that can be permanent.
- Leave the meat for approximately 15 minutes before carving so that the juice does not seep out.
- To prevent too much smoke in the oven during roasting, add some water into the deep pan. To prevent the smoke condensation, add water each time after it dries up.

9.4 Cooking times

Cooking times depend on the type of food, its consistency, and volume.

Initially, monitor the performance when you cook. Find the best settings (heat setting, cooking time, etc.) for your cookware, recipes and quantities when you use this appliance.

9.5 Baking and roasting table

Cakes

Food	Top / Bottom Heat		Fan Cooking		Time (min)	Comments
	Temperature (°C)	Shelf position	Temperature (°C)	Shelf position		
Whisked recipes	170	2	160	3	45 - 60	In a cake mould
Shortbread dough	170	2	160	3	20 - 30	In a cake mould
Buttermilk cheesecake	170	1	160	1	70 - 80	In a 26 cm cake mould on a wire shelf
Apple cake (Apple pie)[1)]	170	2	160	2 (left and right)	80 - 100	In two 20 cm cake moulds on a wire shelf
Strudel	175	3	150	2	60 - 80	In a baking tray
Jam-tart	170	2	165	2 (left and right)	30 - 40	In a 26 cm cake mould
Sponge cake	170	2	160	2	50 - 60	In a 26 cm cake mould
Christmas cake / Rich fruit cake[1)]	160	2	150	2	90 - 120	In a 20 cm cake mould
Plum cake[1)]	175	1	160	2	50 - 60	In a bread tin
Small cakes - one level	170	3	140 - 150	3	20 - 30	In a baking tray
Small cakes - two levels	-	-	140 - 150	2 and 4	25 - 35	In a baking tray

Food	Top / Bottom Heat		Fan Cooking		Time (min)	Comments
	Temperature (°C)	Shelf position	Temperature (°C)	Shelf position		
Biscuits / pastry strips - one level	140	3	140 - 150	3	30 - 35	In a baking tray
Biscuits / pastry strips - two levels	-	-	140 - 150	2 and 4	35 - 40	In a baking tray
Meringues	120	3	120	3	80 - 100	In a baking tray
Buns[1)]	190	3	180	3	15 - 20	In a baking tray
Eclairs	190	3	170	3	25 - 35	In a baking tray
Plate tarts	180	2	170	2	45 - 70	In a 20 cm cake mould
Rich fruit cake	160	1	150	2	110 - 120	In a 24 cm cake mould
Victoria sandwich[1)]	170	1	160	1	50 - 60	In a 20 cm cake mould

1) Preheat the oven for 10 minutes.

Bread and pizza

Food	Top / Bottom Heat		Fan Cooking		Time (min)	Comments
	Temperature (°C)	Shelf position	Temperature (°C)	Shelf position		
White bread[1)]	190	1	190	1	60 - 70	1 - 2 pieces, 500 gr per piece
Rye bread	190	1	180	1	30 - 45	In a bread tin
Pizza[1)]	230 - 250	1	230 - 250	1	10 - 20	In a baking tray or a deep pan

Food	Top / Bottom Heat		Fan Cooking		Time (min)	Comments
	Temperature (°C)	Shelf position	Temperature (°C)	Shelf position		
Scones[1)]	200	3	190	3	10 - 20	In a baking tray

1) Preheat the oven for 10 minutes.

Flans

Food	Top / Bottom Heat		Fan Cooking		Time (min)	Comments
	Temperature (°C)	Shelf position	Temperature (°C)	Shelf position		
Pasta flan	200	2	180	2	40 - 50	In a mould
Vegetable flan	200	2	175	2	45 - 60	In a mould
Quiches[1)]	180	1	180	1	50 - 60	In a mould
Lasagne[1)]	180 - 190	2	180 - 190	2	25 - 40	In a mould
Cannelloni[1)]	180 - 190	2	180 - 190	2	25 - 40	In a mould

1) Preheat the oven for 10 minutes.

Meat

Food	Top / Bottom Heat		Fan Cooking		Time (min)	Comments
	Temperature (°C)	Shelf position	Temperature (°C)	Shelf position		
Beef	200	2	190	2	50 - 70	On a wire shelf
Pork	180	2	180	2	90 - 120	On a wire shelf
Veal	190	2	175	2	90 - 120	On a wire shelf
English roast beef, rare	210	2	200	2	50 - 60	On a wire shelf
English roast beef, medium	210	2	200	2	60 - 70	On a wire shelf
English roast beef, well done	210	2	200	2	70 - 75	On a wire shelf

Food	Top / Bottom Heat		Fan Cooking		Time (min)	Comments
	Temperature (°C)	Shelf position	Temperature (°C)	Shelf position		
Shoulder of pork	180	2	170	2	120 - 150	With rind
Shin of pork	180	2	160	2	100 - 120	Two pieces
Lamb	190	2	175	2	110 - 130	Leg
Chicken	220	2	200	2	70 - 85	Whole
Turkey	180	2	160	2	210 - 240	Whole
Duck	175	2	220	2	120 - 150	Whole
Goose	175	2	160	1	150 - 200	Whole
Rabbit	190	2	175	2	60 - 80	Cut in pieces
Hare	190	2	175	2	150 - 200	Cut in pieces
Pheasant	190	2	175	2	90 - 120	Whole

Fish

Food	Top / Bottom Heat		Fan Cooking		Time (min)	Comments
	Temperature (°C)	Shelf position	Temperature (°C)	Shelf position		
Trout / Sea bream	190	2	175	2	40 - 55	3 - 4 fish
Tuna fish / Salmon	190	2	175	2	35 - 60	4 - 6 fillets

9.6 Grilling

Preheat the empty oven for 3 minutes before cooking.

Food	Quantity		Temperature (°C)	Time (min)		Shelf position
	Pieces	(g)		1st side	2nd side	
Fillet steaks	4	800	max.	12 - 15	12 - 14	4
Beef steaks	4	600	max.	10 - 12	6 - 8	4

Food	Quantity		Tempera-ture (°C)	Time (min)		Shelf po-sition
	Pieces	(g)		1st side	2nd side	
Sausages	8	-	max.	12 - 15	10 - 12	4
Pork chops	4	600	max.	12 - 16	12 - 14	4
Chicken (cut in 2)	2	1000	max.	30 - 35	25 - 30	4
Kebabs	4	-	max.	10 - 15	10 - 12	4
Breast of chicken	4	400	max.	12 - 15	12 - 14	4
Hambur-ger	6	600	max.	20 - 30	-	4
Fish fillet	4	400	max.	12 - 14	10 - 12	4
Toasted sandwich-es	4 - 6	-	max.	5 - 7	-	4
Toast	4 - 6	-	max.	2 - 4	2 - 3	4

9.7 Drying - Fan Cooking

- Cover trays with grease proof paper or baking parchment.
- For a better result, stop the oven halfway through the drying time, open the door and let it cool down for one night to complete the drying.

Vegetables

Food	Temperature (°C)	Time (h)	Shelf position	
			1 position	2 positions
Beans	60 - 70	6 - 8	3	1 / 4
Peppers	60 - 70	5 - 6	3	1 / 4
Vegetables for sour	60 - 70	5 - 6	3	1 / 4
Mushrooms	50 - 60	6 - 8	3	1 / 4
Herbs	40 - 50	2 - 3	3	1 / 4

Fruit

Food	Temperature (°C)	Time (h)	Shelf position	
			1 position	2 positions
Plums	60 - 70	8 - 10	3	1 / 4

Food	Temperature (°C)	Time (h)	Shelf position	
			1 position	2 positions
Apricots	60 - 70	8 - 10	3	1 / 4
Apple slices	60 - 70	6 - 8	3	1 / 4
Pears	60 - 70	6 - 9	3	1 / 4

10. CARE AND CLEANING

WARNING!
Refer to Safety chapters.

10.1 Notes on cleaning

- Clean the front of the appliance with a soft cloth with warm water and a cleaning agent.
- To clean metal surfaces, use a dedicated cleaning agent.
- Clean the appliance interior after each use. Fat accumulation or other food remains may result in a fire. The risk is higher for the grill pan.
- Clean stubborn dirt with a special oven cleaner.
- Clean all accessories after each use and let them dry. Use a soft cloth with warm water and a cleaning agent.
- If you have nonstick accessories, do not clean them using aggressive agents, sharp-edged objects or a dishwasher. It can cause damage to the nonstick coating.

10.2 Stainless steel or aluminium appliances

Clean the oven door with a damp cloth or sponge only. Dry it with a soft cloth. Do not use steel wool, acids or abrasive materials as they can damage the oven surface. Clean the oven control panel with the same precautions.

10.3 Cleaning the door gasket

- Regularly do a check of the door gasket. The door gasket is around the frame of the oven cavity. Do not use the appliance if the door gasket is damaged. Contact an Authorised Service Centre.
- To clean the door gasket, refer to the general information about cleaning.

10.4 Aqua Cleaning

The Aqua cleaning procedure uses steam to help remove remaining fat and food particles from the oven.

1. Put 300 ml of water into the Aqua cleaning container at the bottom of the oven.
2. Set the function .
3. Set the temperature to 90 °C.
4. Let the appliance operate for 30 minutes.
5. Deactivate the appliance and let it cool down.
6. When the appliance is cool, clean the inside of the oven with a soft cloth.

WARNING!
Make sure that the appliance is cool before you touch it. There is a risk of burns.

10.5 Cleaning the oven door

The oven door has two glass panels. You can remove the oven door and the internal glass panel to clean it.

The oven door can close if you try to remove the internal glass panel before you remove the oven door.

CAUTION!
Do not use the appliance without the internal glass panel.

1. Open the door fully and hold the two door hinges.

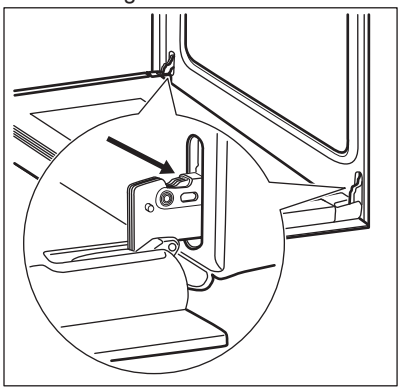

2. Lift and turn the levers on the two hinges.

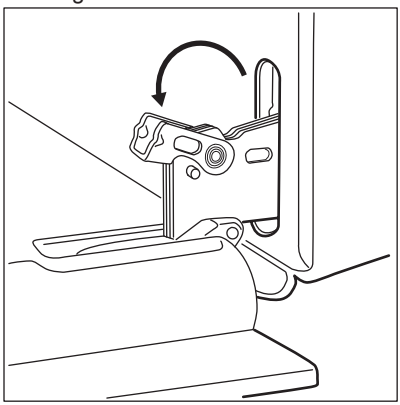

3. Close the oven door halfway to the first opening position. Then pull forward and remove the door from its seat.

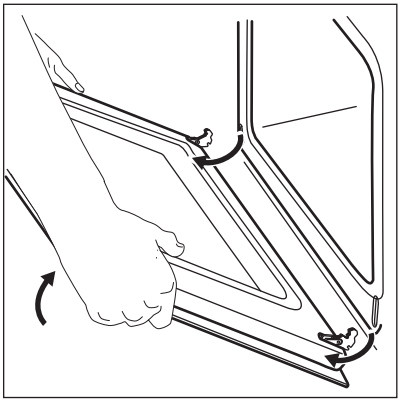

4. Put the door on a soft cloth on a stable surface.
5. Hold the door trim (B) on the top edge of the door at the two sides and push inwards to release the clip seal.

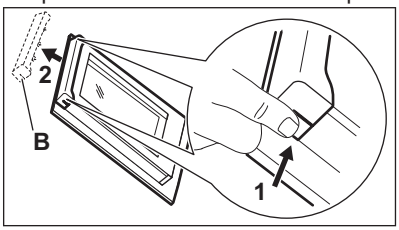

6. Pull the door trim to the front to remove it.
7. Hold the door glass panel by its top edge and carefully pull it out. Make sure the glass slides out of the supports completely.

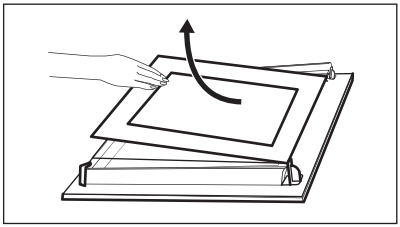

8. Clean the glass panel with water and soap. Dry the glass panel carefully.

When the cleaning is completed, install the glass panel and the oven door. Do the above steps in the opposite sequence.

The screen-printing zone must face the inner side of the door. Make sure that

after the installation the surface of the glass panel frame on the screen-printing zones is not rough when you touch it.

Make sure that you install the internal glass panel in the seats correctly.

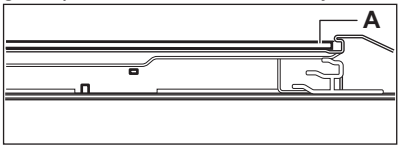

10.6 Replacing the lamp

Put a cloth on the bottom of the interior of the appliance. It prevents damage to the lamp glass cover and the cavity.

WARNING!
Danger of electrocution!
Disconnect the fuse before you replace the lamp.
The lamp and the lamp glass cover can be hot.

CAUTION!
Always hold the halogen lamp with a cloth to prevent grease residue from burning on the lamp.

1. Deactivate the appliance.
2. Remove the fuses from the fuse box or deactivate the circuit breaker.

The back lamp

1. Turn the lamp glass cover counterclockwise to remove it.
2. Clean the glass cover.
3. Replace the lamp with a suitable 300 °C heat-resistant lamp.
4. Install the glass cover.

11. TROUBLESHOOTING

WARNING!
Refer to Safety chapters.

11.1 What to do if...

Problem	Possible cause	Remedy
The oven does not heat up.	The oven is deactivated.	Activate the oven.
The oven does not heat up.	The fuse is blown.	Make sure that the fuse is the cause of the malfunction. If the fuse is blown again and again, contact a qualified electrician.
The lamp does not operate.	The lamp is defective.	Replace the lamp.
Steam and condensation settle on the food and in the cavity of the oven.	You left the dish in the oven for too long.	Do not leave the dishes in the oven for longer than 15 - 20 minutes after the cooking process ends.

11.2 Service data

If you cannot find a solution to the problem yourself, contact your dealer or an Authorised Service Centre.

The necessary data for the service centre is on the rating plate. The rating plate is on the front frame of the appliance cavity. Do not remove the rating plate from the appliance cavity.

We recommend that you write the data here:	
Model (MOD.)	.....
Product number (PNC)	.....
Serial number (S.N.)	.....

12. INSTALLATION

WARNING!
Refer to Safety chapters.

12.1 Building In

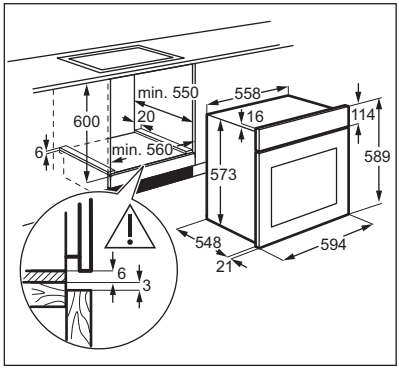

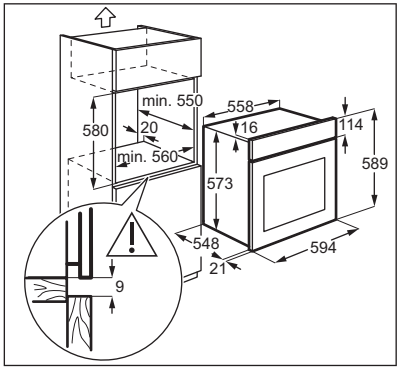

12.2 Securing the appliance to the cabinet

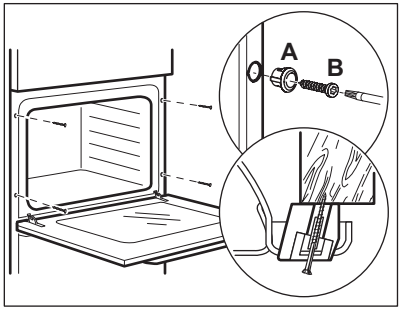

12.3 Electrical installation

The manufacturer is not responsible if you do not follow the safety precautions from the Safety chapters.

This appliance is supplied only with a main cable.

12.4 Cable

Cable types applicable for installation or replacement:

H07 RN-F, H05 RN-F, H05 RRF, H05 VV-F, H05 V2V2-F (T90), H05 BB-F

For the section of the cable refer to the total power on the rating plate. You can also refer to the table:

Total power (W)	Section of the cable (mm²)
maximum 1380	3 x 0.75
maximum 2300	3 x 1

Total power (W)	Section of the cable (mm²)
maximum 3680	3 x 1.5

The earth cord (green / yellow cable) must be 2 cm longer than phase and neutral cables (blue and brown cables).

13. ENERGY EFFICIENCY

13.1 Product Fiche and information according to EU 65-66/2014

Supplier's name	Electrolux	
Model identification	FQ53B FQ53N FQ53X ROB2100AOK ROB2100AOW	
Energy Efficiency Index	104.8	
Energy efficiency class	A	
Energy consumption with a standard load, conventional mode	0.89 kWh/cycle	
Energy consumption with a standard load, fan-forced mode	0.88 kWh/cycle	
Number of cavities	1	
Heat source	Electricity	
Volume	68 l	
Type of oven	Built-In Oven	
Mass	FQ53B	27.6 kg
	FQ53N	27.5 kg
	FQ53X	26.4 kg
	ROB2100AOK	26.7 kg
	ROB2100AOW	26.6 kg

EN 60350-1 - Household electric cooking appliances - Part 1: Ranges, ovens, steam ovens and grills - Methods for measuring performance.

13.2 Energy saving

The appliance contains features which help you save energy during everyday cooking.

General hints
Make sure that the oven door is closed properly when the appliance operates and keep it closed as much as possible during the cooking.

Use metal dishes to improve energy saving.

When possible, do not preheat the oven before you put the food inside.

When the cooking duration is longer than 30 minutes, reduce the oven temperature to minimum 3 - 10 minutes before the end of the cooking time, depending on the duration of the cooking. The residual heat inside the oven will continue to cook.

Use the residual heat to warm up other dishes.

Cooking with fan
When possible, use the cooking functions with fan to save energy.

Keep food warm
Choose the lowest possible temperature setting to use residual heat and keep a meal warm.

14. ENVIRONMENTAL CONCERNS

Recycle the materials with the symbol ♺. Put the packaging in applicable containers to recycle it. Help protect the environment and human health and to recycle waste of electrical and electronic appliances. Do not dispose appliances marked with the symbol with the household waste. Return the product to your local recycling facility or contact your municipal office.

www.electrolux.com/shop



867340242-A-372016

CE