

A VERSATILE SCANNER FOR EVERY WORKSPACE

EPSON GT-S50 SERIES



- Capture any paper document at a touch of a button
- High capacity 75 A4-page ADF
- Dual CCD
- 600 dpi optical resolution
- Fast, high-quality scanning up to 25 ppm/50 ipm
- Scan instantly and save energy with Epson ReadyScan LED technology
- Versatile paper loading capacity: work with everything from business cards and embossed cards to thin paper
- 2-line LCD with Scan-to-Job naming for easy one-touch scanning

The Epson GT-S50 Series is designed for hassle-free scanning of any paper documents whether thin, thick or embossed media. They are ideal for any office which requires a versatile and small footprint device for cost-effective document scanning without compromising on ease of use.

Advanced features, small footprint

Ideal for scanning mixed documents together, the Epson GT-S50 Series offers a scanning speed up to 25 ppm and 50 ipm in mono, grayscale and colour modes.

Ease of use

Users can read and select their own registered Scan-to-Job function on the 2-line LCD panel, avoiding misrouting issues often encountered when using products with a 1-digit display.

Flexibility and full integration

From thin paper invoices to business cards and embossed cards, the Epson GT-S50 Series can scan mixed documents using auto-size and colour detection. And with advanced Twain and ISIS driver support getting set up is quick and easy. The Epson Event Manager solution, bundled as standard, gives users the flexibility to capture, convert, distribute and store document information in virtually any electronic document management system at a touch of a button.

Advanced document imaging features

EpsonScan 3.6, bundled as standard, offers comprehensive features such as searchable PDF, Text Enhancement, RGB dropout, Auto De-Skew and much more to increase operational efficiency.

Save time and energy

Thanks to the ReadyScan LED technology, users benefit from instant scanning and save energy.

EPSON®
EXCEED YOUR VISION

PRODUCT DIMENSIONS AND SPECIFICATIONS

SCANNER TYPE Photoelectric device Light source Light source benefit Optical resolution Pixel depth	A4 Sheetfed colour document scanner DUAL 3-line CCD (R,G,B) ReadyScan LED technology No warm-up time, Energy saving 600 dpi Greyscale: 256 levels, Colour: 24-bit
SCANNING SPEED A4 200 dpi B/W, greyscale and colour	25 pages per minute / 50 images per minute
AUTO DOCUMENT FEEDER Paper setting capacity Type Paper supply Document size Corresponding paper weight Minimum document size Maximum document size Daily duty cycle	75 sheets (75 g/m²) Sheet through, 1 pass Duplex scanning Face down load A4, A5, A6, B5, Letter and Custom sizes From thin paper (50 g/m²) to ID card, Business cards and embossed card up to 1.5 mm Width: 54 mm; Length: 73.4 mm Width: 216 mm; Length: 914 mm 1200 pages
PANEL FUNCTIONS	2-Line LCD to display up to 10 meaningful 'Scan-to-Job' names Up, Down, Start and Cancel buttons One touch operation for direct scan to file, email, printers, FTP folder, Microsoft SharePoint; any desktop or server application that supports paper capture function
DOCUMENT SCANNING FEATURES	RGB colour dropout, Auto format recognition of mixed documents, Auto Area Segmentation, Multi-PDF Batch scanning, Skip Blank Page, Punch Holes removal, Automatic B/W colour original detection, Secure PDF, Automatic De-Skew, A3 stitching feature, Advanced Editing Features Pre-defined Scanning Settings, Threshold adjustment Format: JPG,TIFF, Multi-TIFF, PDF, Searchable PDF
DRIVER AND SOFTWARE	Epson Scan 3.6, TWAIN, WIA and ISIS*1 driver support, Epson Event Manager 2.1, Copy Utility Presto! Page Manager 8 Standard, ABBYY FineReader 6.0 (Win) / 5.0 (Mac) Sprint Plus, Presto! BizCard 5 SE
OTHER BUNDLE ITEMS	USB cable, Carrier sheet, AC adapter, Edimax Network Interface for Epson GT-S50N (Windows only)
CONNECTIVITY Epson GT-S50 interface Epson GT-S50N interface (Windows only)	High speed USB 2.0 External Network interface or High speed USB 2.0
SUPPORTED PLATFORMS EpsonScan GT-S50 EpsonScan GT-S50N ISIS	Windows XP, XP x64, 2000, Vista, Vista x64, Mac 10.2.8 or later Windows XP, XP x64, 2000, Vista, Vista x64 Windows XP, XP x64, 2000, Vista, Vista x64
ENVIRONMENTAL CONDITIONS Temperature Humidity	5°C to 35°C (operating) -25°C to 60°C (storage) 10% to 80% without condensation (operating) 10% to 85% without condensation (storage)
POWER REQUIREMENTS Voltage Frequency Power consumption	AC220-240V 50Hz 45 Watts operating, 13 Watts in ready mode. Sleep mode: 5W
DIMENSIONS AND WEIGHT Dimensions (WxDxH) Weight	302x198x213 mm (covers closed) Approx. 4.6 kg
WARRANTY Standard warranty Extended warranty	1 year on site Epson CoverPlus 3 year extended warranty on-site (ECPGRP30)

*1 Network enabled on Epson GT-S50N (Windows only)
*2 Available on free download on Epson websites

EPSON GT-S50 SERIES

WHAT'S IN THE BOX

Epson GT-S50 – **B11B194021**
- Epson GT-S50 scanner
- Carrier sheet
- AC adapter
- Warranty document
- USB cable
- Epson Event Manager 2.1, Copy Utility Presto! Page Manager 8 Standard, ABBYY FineReader 6.0(Win)/ 5.0(Mac) Sprint Plus, Presto! BizCard 5 SE

Epson GT-S50N (Windows only) – **B11B194021NP**
- Epson GT-S50 scanner
- Carrier sheet
- AC adapter
- Warranty document
- USB cable
- Epson Event Manager 2.1, Edimax Network interface, Copy Utility Presto! Page Manager 8 Standard, ABBYY FineReader 6.0(Win)/ 5.0(Mac) Sprint Plus, Presto! BizCard 5 SE



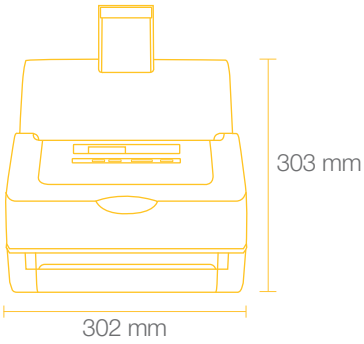

Mac Universal Windows Vista Windows XP USB Mercury Free ReadyScan ENERGY STAR EPSON COVERPLUS

For further information please contact your local Epson office or visit **www.epson-europe.com**

Austria 0810/20 01 13 (0,07 €/Min.) **Belgium** 070/350120 (0.1735 €/min.) **Czech** 800/142 052 **Denmark** 44 50 85 85 **Finland** 0201 552 091 **France** 0821 010 100 (0,12 €/min) **Germany** 01805/23 41 10 (0,14 €/Min.) **Greece** 210-8099499 **Hungary** 06800 147 83 **Ireland** 1 800 409132 **Italy** 02-660321 10 (0,12 €/min.) **Luxemburg** 900/43010 (0,24 €/min.) **Middle East** +9714 8818934 **Netherlands** 0900-5050808 (0.05 €/oproep + 0.15 €/min.) **Norway** 22 06 42 80 **Poland** 0-0-800 4911299 (0,16 zł/min.) **Portugal** 707 222 111 **Russia** (095) 777-03-55 **Slovakia** 0850 111 429 **South Africa** (+2711) 465-9621 **Spain** 93 582 15 00 **Sweden** 0771-400135 (Mobilsamtal – 0,99 kr/min, Lokala samtal – 0,30 kr/min, Utlandssamtal – 0,89 kr/min) **Switzerland** 0848 448820 (4-8 cent./min.) **Turkey** (0212) 3360303 **United Kingdom** 0871 222 6702

Trademarks and registered trademarks are the property of Seiko Epson Corporation or their respective owners.
Product information is subject to change without prior notice.

EPSON®