Operating instructions

Chest freezer

Read the operating instructions before switching on for the first time

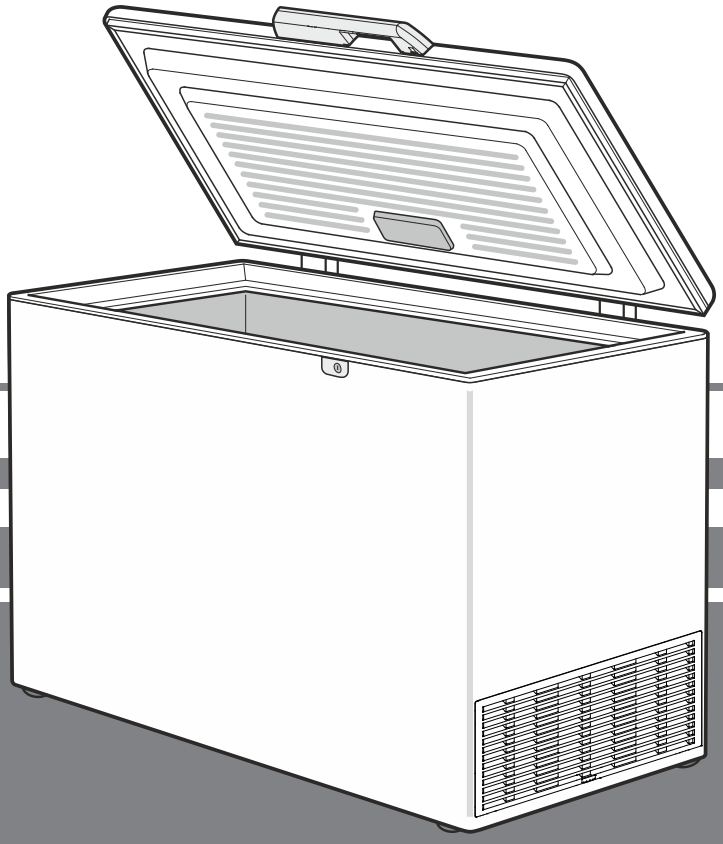

7083 054-00

GTP

LIEBHERR

Disposal notes

The appliance contains reusable materials and should be disposed of properly - not simply with unsorted household refuse. Appliances which are no longer needed must be disposed of in a professional and appropriate way, in accordance with the current local regulations and laws.

When disposing of the appliance, ensure that the refrigerant circuit is not damaged to prevent uncontrolled escape of the refrigerant it contains (data on type plate) and oil.

- Disable the appliance.
- Pull out the mains plug.
- Cut through the connection cable.

⚠ WARNING
Danger of suffocation due to packing material and plastic film! Do not allow children to play with packaging material. Take the packaging material to an official collection point.

Range of appliance use

The appliance is suitable solely for cooling food in a domestic environment or similar. This includes, for example, use

- in staff kitchenettes, bed and breakfast establishments,
- by guests in cottages, hotels, motels and other forms of accommodation,
- in catering and similar services in the wholesale trade.

Use the appliance solely as is customary within a domestic environment. All other types of use are inadmissible. The appliance is not suitable for storing and cooling medicines, blood plasma, laboratory preparations or similar substances and products covered by the 2007/47/EC Medical Devices Directive. Any misuse of the appliance may result in damage to or spoilage of stored goods. Furthermore, the appliance is not suitable for operation in potentially explosive atmospheres.

Description of the appliance

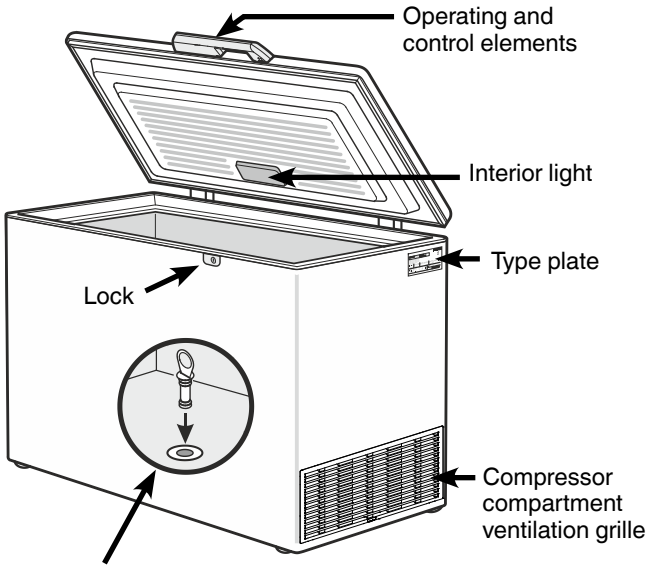

Important!

Before starting up the appliance, plug the defrost drain opening in the floor of the appliance with the plug provided. This is important to ensure that the appliance works properly.

Safety instructions and warnings

- To prevent injury or damage to the unit, the appliance should be unpacked and set up by two people.
- In the event that the appliance is damaged on delivery, contact the supplier immediately before connecting to the mains.
- To guarantee safe operation, ensure that the appliance is set up and connected as described in these operating instructions.
- Disconnect the appliance from the mains if any fault occurs. Pull out the plug, switch off or remove the fuse.
- When disconnecting the appliance, pull on the plug, not on the cable.
- Any repairs and work on the appliance should only be carried out by the customer service department, as unauthorised work could prove highly dangerous for the user. The same applies to changing the mains power cable.
- Do not allow naked flames or ignition sources to enter the appliance. When transporting and cleaning the appliance ensure that the refrigerant circuit is not damaged. In the event of damage, make sure that there are no ignition sources nearby and keep the room well ventilated.
- This appliance can be used by children of 8 years old and over, and also by persons with restricted physical, sensory or mental capacity or lack of experience and knowledge, if they are supervised or have been instructed on safe use of the appliance and understand the resulting risks. Children must not be allowed to play with the appliance. Cleaning and user maintenance must not be carried out by children without supervision.
- Avoid prolonged skin contact with cold surfaces or chilled/frozen food. This could cause pain, numbness and frostbite. In the case of prolonged skin contact, protective measures should be taken, e.g. gloves should be worn.
- Do not eat ice cream, particulary ice lollies or ice cubes, immediately after taking them from the freezer compartment as there is a risk of "burning" because of the very cold temperatures.
- Do not consume food which has been stored for too long, as it could cause food poisoning.

- Do not store explosives or sprays using combustible propellants such as butane, propane, pentane etc. in the appliance. Electrical components might cause leaking gas to ignite. You may identify such sprays by the printed contents or a flame symbol.
- Do not use electrical appliances inside the appliance.
- If you have a lockable appliance, do not keep the key near the appliance or within reach of children.
- The appliance is designed for use in enclosed areas. Do not operate the appliance outdoors or in areas where it is exposed to splash water or damp conditions.
- Special-purpose lamps (LED) in the appliance serve to illuminate the appliance interior and are not suited for room illumination.

Climate rating

The climate rating indicates the room temperature at which the appliance may be operated in order to achieve full refrigeration performance.

The climate rating is indicated on the type plate.

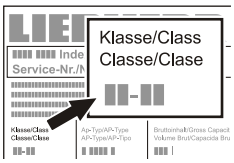

The position of the type plate is shown in the section entitled **Description of the appliance**.

Climate rating	**Room temperature**
SN	+10°C to +32°C
N	+16°C to +32°C
ST	+16°C to +38°C
T	+16°C to +43°C
SN-ST	+10°C to +38°C
SN-T	+10°C to +43°C

Fault-free operation of the appliance is ensured provided that the ambient temperature does not fall below -15°C.

Setting up

- Do not place the appliance in areas of direct sunlight or next to a stove, heater or similar object.
- The floor on which the appliance stands must be horizontal and level. Place the appliance far enough away from the wall so that the lid can be opened and closed unhindered.

① Do not cover the gap between the lower edge of the freezer and the floor, as the refrigeration unit has to be supplied with air for cooling.

② There must be a gap of at least 20 cm between the ventilation grille and the wall. This gap must be kept clear and the ventilation openings uncovered.

③ Do not place any objects immediately next to the outer housing of the appliance. There must be a gap of at least 20 mm all round in order to ensure adequate heat discharge.

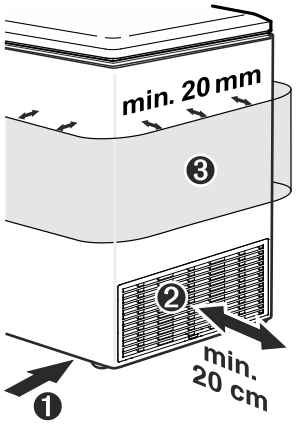

- Standard EN 378 specifies that the room in which you install your appliance must have a volume of 1 m^3 per 8 g of R 600a refrigerant used in the appliance, so as to avoid the formation of inflammable gas/air mixtures in the room where the appliance is located in the event of a leak in the refrigerant circuit. The quantity of refrigerant used in your appliance is indicated on the type plate.

Dimensions (mm)

Model	A	B	C
GTP 2356	915	1138	760
GTP 2756	915	1294	760
GTP 3126	915	1294	760
GTP 3156	915	1294	760
GTP 3656	915	1378	809
GTP 4656	915	1653	809

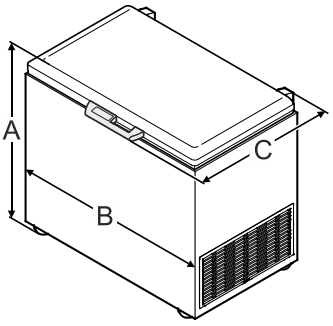

Electrical connection

Only operate the appliance with **alternating current (AC)**.

The permissible voltage and frequency are indicated on the type plate. The position of the type plate is shown in the section entitled **Description of the appliance**.

The socket must be properly earthed and protected by a fuse.

The tripping current of the fuse must be between 10 A and 16 A.

The socket must not be situated behind the appliance and must be easily accessible.

Do not connect the appliance using an extension cable or extension socket.

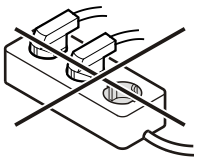

Do not use stand-alone inverters (conversion of direct current to alternating current/three-phase current) or energy-saving plugs. Risk of damage to the electronic control system!

Saving energy

- Always ensure good ventilation. Do not cover ventilation openings or grille.
- Avoid positioning the appliance in direct sunlight or near cookers, radiators and similar sources of heat.
- The energy consumption depends on the installation conditions, e.g. the ambient temperature.
- Keep the time the appliance is open to a minimum.
- Store food logically.
- Keep all food properly packed and covered so as to avoid its frosting up on the outside.
- Always allow hot food to cool to room temperature before placing in the appliance.
- If there is a thick layer of frost in the appliance: defrost the appliance.

Accumulated dust increases the energy consumption:

- Regularly clean the motor compartment ventilation openings to keep them free from dust.

Operating and control elements



❶ On/Off button
❷ SuperFrost button
❸ Audible warning on/off button
❹ Child lock LED
❺ SuperFrost LED
❻ Temperature display
❼ Temperature setting buttons

Switching the appliance on and off

You are recommended to clean the appliance before switching it on for the first time (see **Cleaning**).

To switch the appliance on: Press the **ON/OFF** button until the temperature display lights up.

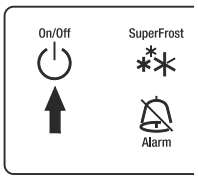

- The two illuminated dashes of the digital temperature display will light up until a temperature of 0°C is reached.
- If the temperature is below 0°C, the digital temperature display will show the temperature inside the appliance.

To switch the appliance off: Press the **ON / OFF** button for approx. 3 seconds so that the temperature display goes out.

Setting the temperature

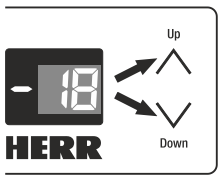

- **To reduce the temperature:** Press the bottom button **Down**.
- **To increase the temperature:** Press the top button **Up**.
- While you are entering the temperature, the set temperature will flash on the display.
- You can change the settings in increments of 1°C briefly pressing the button again. If the buttons are held down the temperature setting will change faster.
- The electronic controls will switch over automatically about 5 seconds after the last time you pressed the button, and the actual temperature in the freezer will be displayed.

If **F4** or **F5** appears in the display, the appliance has suffered a fault. In this case, contact the customer service department.

Audible warning signal

The audible warning device helps to protect the frozen food and to save energy.

- It sounds when the lid has been left open for longer than about 60 seconds.
- It sounds when it is not cold enough in the freezer compartment. The temperature display will also flash.

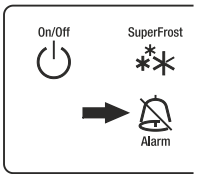

The audible warning device is switched off by pressing the **ALARM** button.

Power failure display

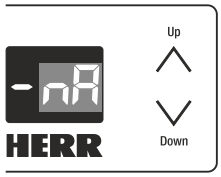

If **nA** appears in the display, this means that the freezer temperature has risen too high during the last few hours or days due to a power failure.

If you press the **ALARM** button whilst the display is reading **nA**, the highest temperature registered during the power failure will be displayed. Check the quality of the food and its suitability for consumption in case it has become too warm or even defrosted.

The highest temperature will appear for appox. 1 minute. After that, the actual temperature in the freezer will re-appear. The display can be switched off by pressing the **ALARM** button.

Set-up mode

In set-up mode you can set the child lock and adjust the brightness of the display. The child lock is designed to protect the appliance from being switched off accidentally.

Activating the child lock

Press SuperFrost for 5 seconds. Display =

SuperFrost Display =

Up Display =

SuperFrost Display =

On/Off Display =

Deactivating the child lock

Press SuperFrost for 5 seconds. Display =

SuperFrost Display =

Down Display =

SuperFrost Display =

On/Off Display =

Adjusting the display brightness

Press SuperFrost for 5 seconds. Display =

Up Display =

SuperFrost Display =

Use buttons Up and Down to select the desired setting.

h1 = minimum brightness
h5 = maximum brightness

SuperFrost Display =

On/Off The adjusted brightness will be activated after one minute.

Note

If a button is pressed, the display lights up for one minute at maximum brightness.

When commissioning the appliance, the adjusted brightness will only be active once the set interior temperature of the appliance has been reached.

Freezing

Fresh food should be frozen to the core as rapidly as possible. This is provided by the SuperFrost facility.

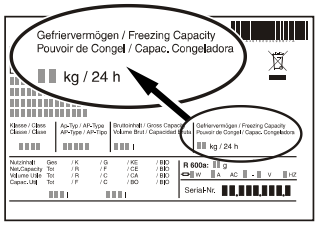

The maximum amount of food in kg which can be frozen in 24 hours is shown on the type plate (Freezing capacity).

NB: The upper stacking limit is the top level of the basket!

SuperFrost

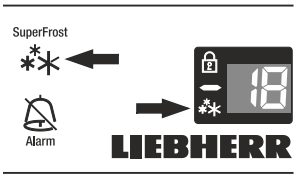

- Press the **SuperFrost** button. The SuperFrost lamp comes on.
- For small amounts of frozen food 6 hours. The maximum amount requires 24 hours.
- Place the fresh food in the freezer. The SuperFrost function switches off automatically. Depending on the quantity of food placed in the freezer, this will normally be between 48 and max. 72 hours.

NB: When you press the SuperFrost button, the compressor might not switch on for up to 8 minutes. This is due to the integrated rise-delay switch which is designed to increase the life span of the refrigeration unit.

Note: To save energy, SuperFrost can be switched off before the 48 hours have elapsed by pressing the SuperFrost button again. Ensure that the temperature is at least -18°C.

You should not switch on the SuperFrost function:
- when placing frozen food in the freezer;
- when freezing up to approx. 2 kg fresh food daily.

Notes on freezing

- Always store identical food items together.
- Pack food which you are freezing yourself in quantities appropriate to your household. To ensure that the food freezes right through, the following quantities should not be exceeded per package: fruit, vegetables: up to 1 kg, meat: up to 2.5 kg.
- In order to achieve fast freezing, food should be in contact with the interior walls when it is placed in the freezer.
- Pack frozen food in standard freezer bags or reuseable plastic, metal or aluminium containers.
- Do not allow fresh food which is to be frozen to come into contact with food already frozen. Always keep packs dry in order to avoid them sticking together.
- Always write the date and contents on the pack and do not exceed the stated storage time for the food.
- Do not freeze bottles and cans which contain carbonated drinks as they might burst.
- Only take out as much food as is immediately required for thawing. Use food which has been thawed in prepared meals as quickly as possible.

Frozen food can be thawed in the following ways:
– in a fan oven
– in a microwave oven
– at room temperature
– in the refrigerator

Equipment

Interior LED light

An LED lamp is fitted as standard to illuminate the interior of the appliance.

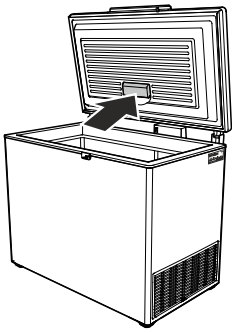

The interior light switches on automatically when the lid is opened and switches off again when it is closed.

The light intensity of the LED light corresponds to laser class 1/1M.

⚠ Important

If the cover is removed, do not look directly at the light through optical lenses from close distance. This can damage your eyes.

Replacing the lamp

If the lamp is defective, it can be replaced taking into account the following points.

1. **Pull out the plug or switch off the fuse.**
2. Remove the cover panel in the direction of the arrow. ⟶

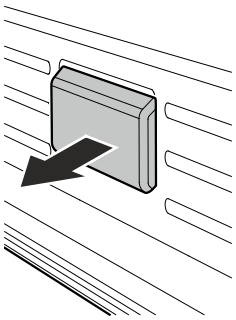

Only original LED lamps from the appliance manufacturer may be used. The lamp can be purchased from the customer service department or specialist dealers.

⚠ WARNING!

When using LED lamps made by other manufacturers, there is a risk of overheating or fire.

Baskets

The baskets make it easier for you to sort food.

The baskets can be suspended in the frame of the freezer by their handles.

The baskets can also be placed on top of one another, by sitting the upper basket on the handles that are folded inwards.

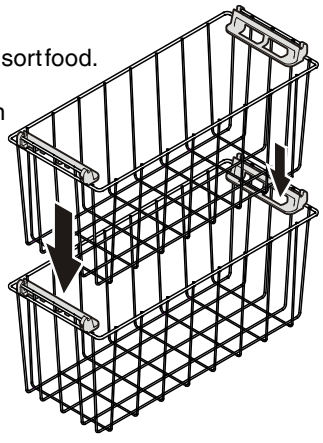

Press the handle downwards, lift and tilt inwards.

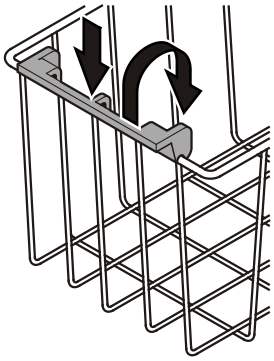

Lock

The lock is equipped with a safety mechanism.

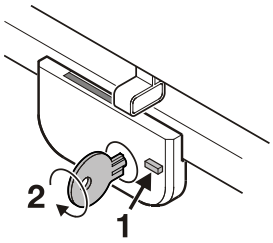

Locking the appliance

1 Press the button and keep it depressed.

2 Turn the key 90°.

Freezer tray

With the freezer tray, small frozen food items (berries, herbs, chopped vegetables) can be gently frozen.

Spread the frozen items out on the freezer tray (pieces of fruit do not stick together and so keep their shape).

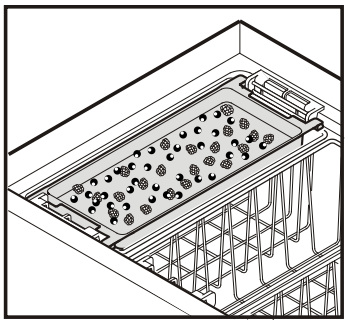

The freezer tray can either be suspended on the basket or can be slid into the interior container and used as a partition.

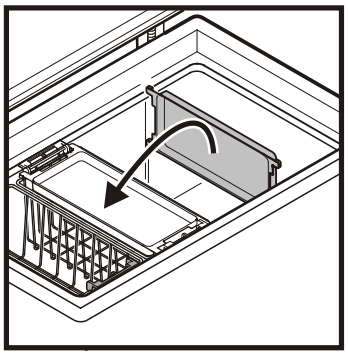

Cold-storage accumulators (depending on options)

In the event of a power failure, the cold-storage accumulator delays the temperature increase in the freezer compartment.

When switching on for the first time, insert the accumulator in direct contact with the interior container side walls and the interior container floor so that it freezes quickly.

When the accumulator is completely frozen, position it at the top of the interior container.

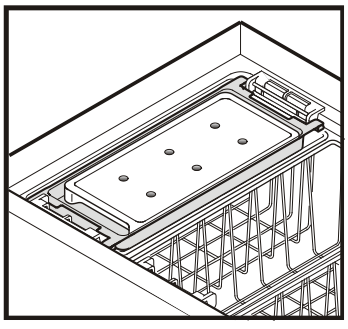

To do this, place the freezer tray containing the accumulator in one of the top baskets (**except model GTP 2356, GTP 2756**).

If the freezer tray continues to be needed as a partition, place the accumulator in the basket directly on top of the frozen goods.

StopFrost system

This system reduces the formation of frost or ice so that the appliance needs defrosting less frequently.

The formation of frost or ice depends on the operating and ambient conditions.

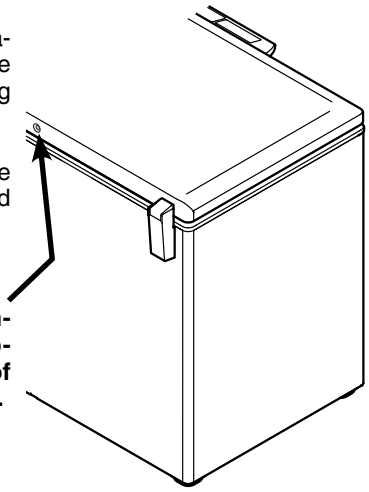

Important note

To ensure correct functioning, the opening of the StopFrost system at the back of the lid must not be closed.

Cleaning

Before cleaning always switch off the appliance. Disconnect from the mains or switch off or unscrew the fuse.

Clean the inside, equipment and outer walls with lukewarm water and a little detergent. Do not use abrasive or acid cleaners or chemical solvents.

Do not use steam cleaners because of the risk of injury and damage.

- Ensure that no cleaning water penetrates into the electrical components or ventilation grille.
- Dry all parts well with a cloth.
- The ventilation grilles should be cleaned regularly. Dust deposits increase energy consumption. Ensure that none of the wires or other components are dislodged, bent or damaged.

Defrosting

After the appliance has been in operation for some time, a layer of frost or ice will form on the inside walls. This increases energy consumption.

- Switch on SuperFrost the day before defrosting to give the food a cold boost.
- Switch the appliance off to defrost. Pull out the mains plug.
- Wrap the frozen food, possibly still in the freezer basket, in paper or blankets and store in a cool place.
- Remove the plug from the drain opening. Remove the dividing wall or freezer tray and place underneath the appliance so that the defrosted water escapes through the drain opening into the dividing wall or the freezer tray.
- Leave the lid open while defrosting. After defrosting mop up the remaining water and clean the appliance.

Do not use any mechanical devices or other artificial aids for defrosting other than those recommended by the manufacturer.

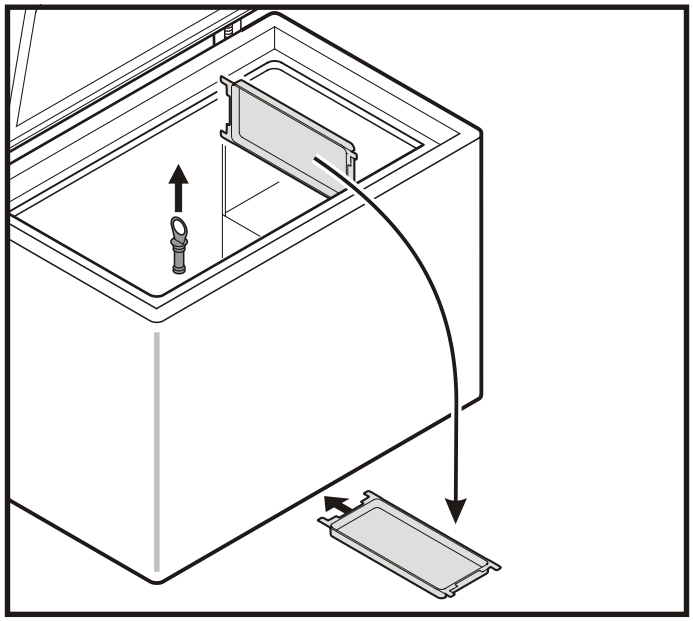

Malfunctions

Your appliance is designed and manufactured for a lengthy, reliable operating life with no malfunctions. If a malfunction nonetheless occurs during operation, check whether it is due to an operating error. Please note that even during the warranty period the resultant servicing costs in this case will have to be borne by the owner.

You may be able to rectify the following faults yourself:

- **Appliance does not function:** the control lamps are not lit.
- Is the plug correctly fitted in the mains socket?
- Is the fuse intact?

- **Loud running noise:**
- Is the appliance set up firmly on the floor?
- Does the appliance cause nearby items of furniture or objects to vibrate? Please note that noises caused by the refrigerant circuit cannot be avoided.

- **The temperature is not low enough:**
- Is the temperature setting correct (see Setting the temperature)?
- Have excessive amounts of fresh food been placed in the appliance? Observe the temperature display for a further 24 hours.
- Does the separately installed thermometer show the correct reading?
- Is the ventilation system working properly?
- Is the appliance set up too close to a heat source?

If none of the above causes apply and you cannot rectify the fault yourself, contact the nearest customer service department stating the type of appliance ①, service number ② and appliance number ③ as indicated on the type plate.

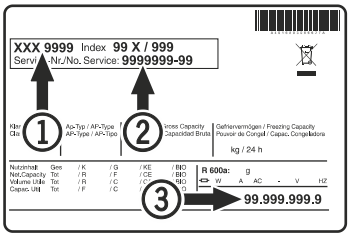

The position of the type plate is shown in the section entitled **Description of the appliance**.

Shutting your appliance down

If your appliance is to be shut down for any length of time, switch it off and disconnect the plug or switch off or unscrew the fuse.

Clean the appliance and leave the lid open in order to prevent unpleasant smells.

The appliance complies with the relevant safety regulations and EU Directives 2014/30/EU and 2014/35/EU.

Liebherr Hausgeräte Lienz GmbH
Dr.-Hans-Liebherr-Strasse 1
A-9900 Lienz
Österreich
www.liebherr.com