30660/**/16

Gebruiksaanwijzing
Notice d'emploi
Benutzerhandbuch
User manual
Manual de usuario
Manual do usuário

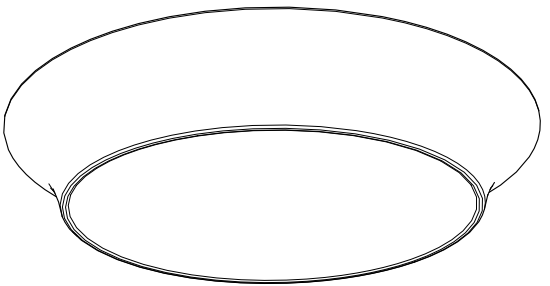

PHILIPS

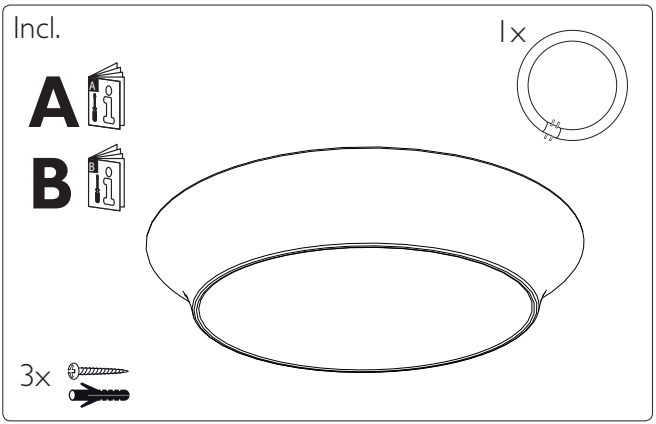
Incl.
1x
A
B
3x

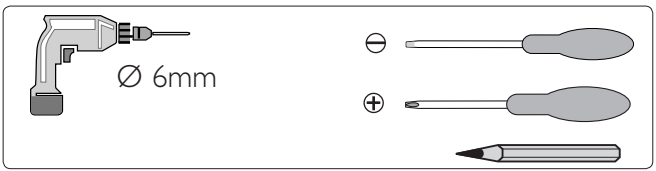
Ø 6mm

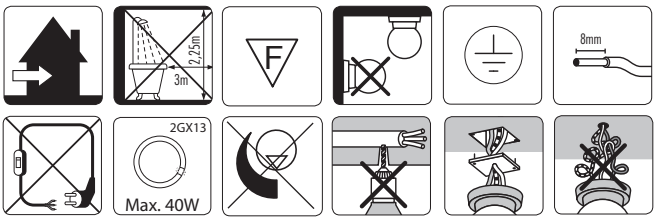
3m
2,25m
F
8mm
2GX13
Max. 40W


B

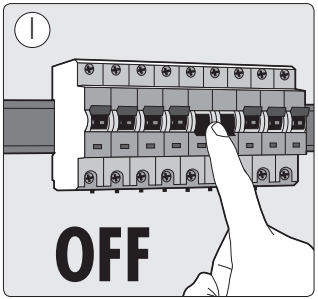
1
OFF

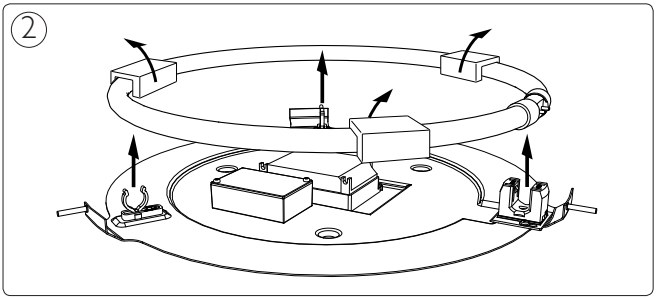
2

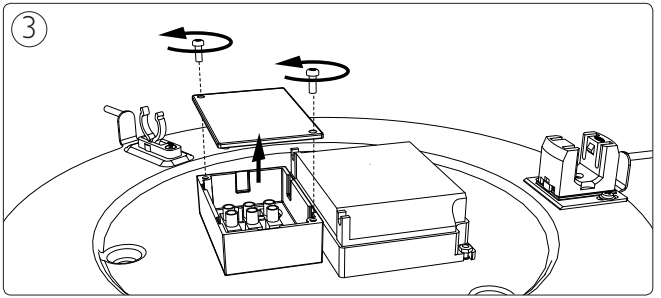
3

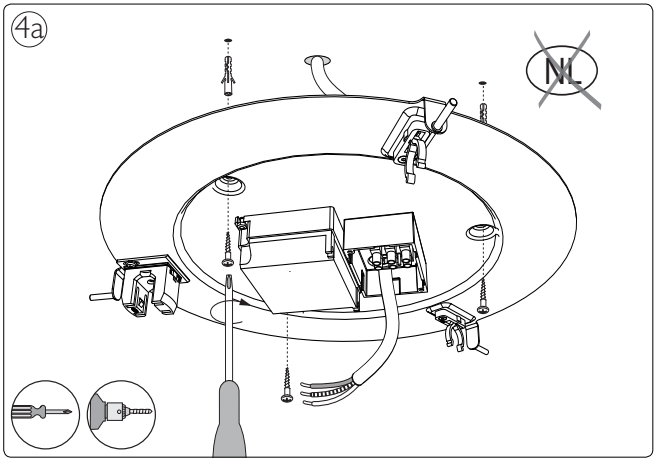
4a
NL

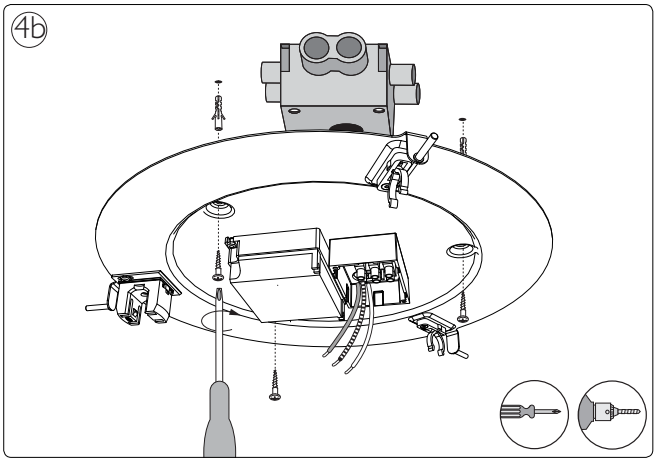
4b

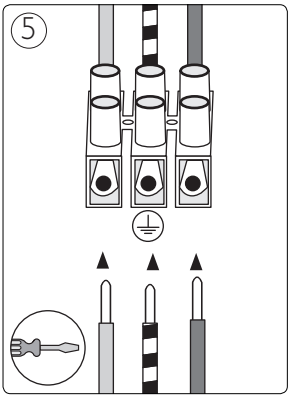
5

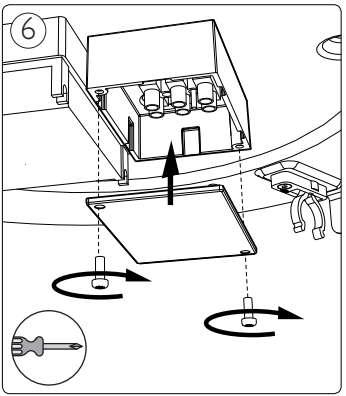
6

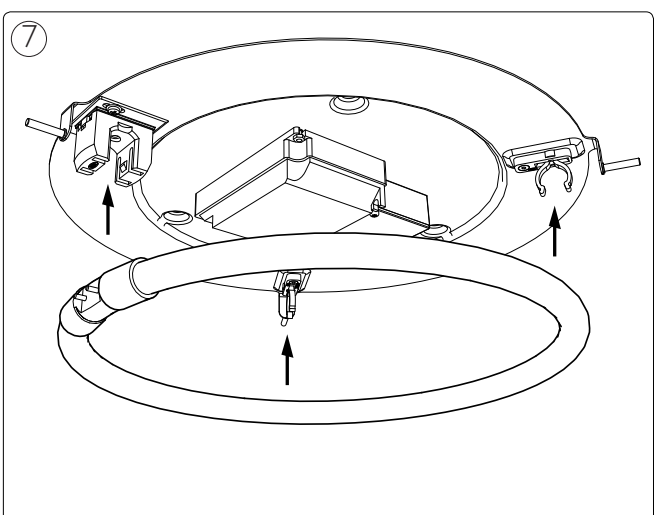
7

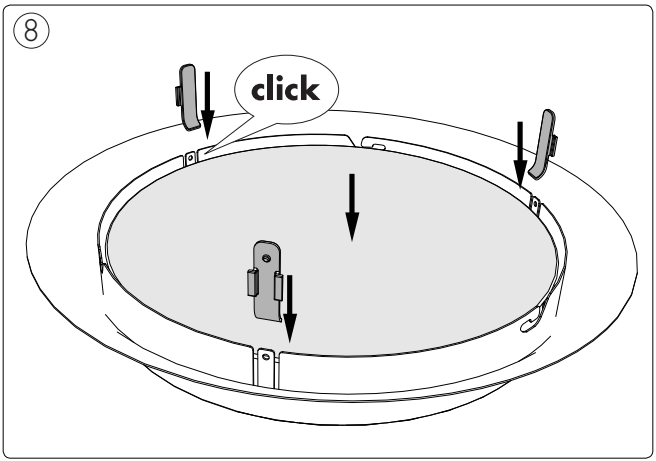
8
click

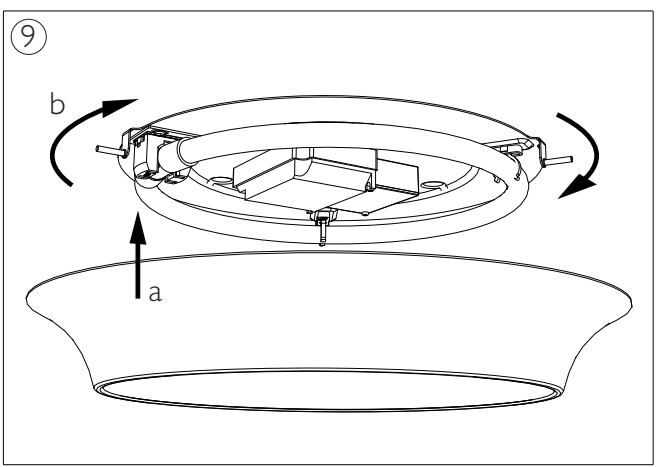
9
b
a



Philips Lighting Contact Centre
Int. Business Reply Service
I.B.R.S. / C.C.R.I. Numéro 10461
5600 VB Eindhoven
Pays-Bas / The Netherlands

www.philips.com/homelighting
☎ +800 7445 4775

4404.018.28751
Last update: 05/03/12