53124/**/16

Gebruiksaanwijzing
Notice d'emploi
Benutzerhandbuch
User manual
Manual de usuario



PHILIPS

440401822481.indd 1 11/16/2011 10:37:25 AM

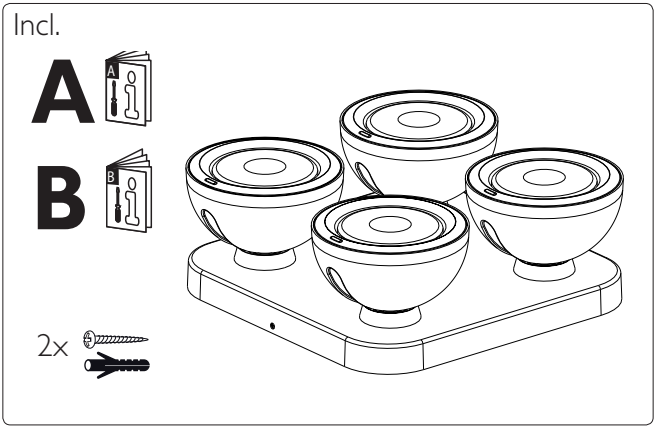

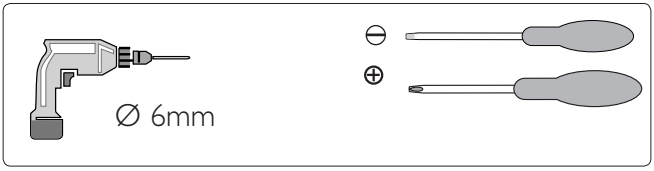

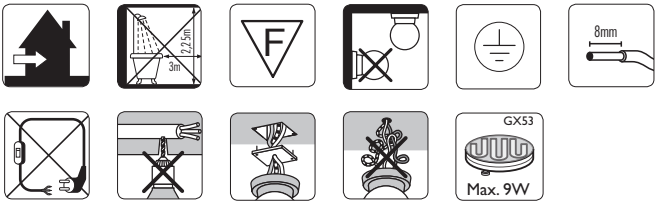



440401822481.indd 2 11/16/2011 10:37:26 AM

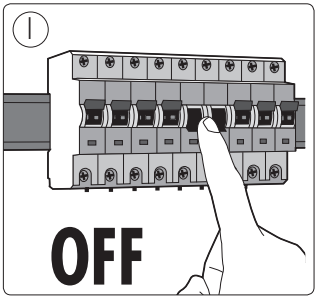

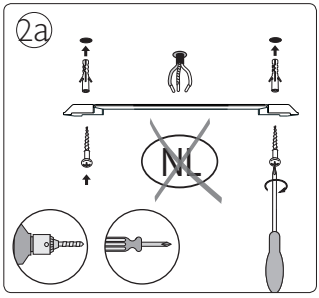

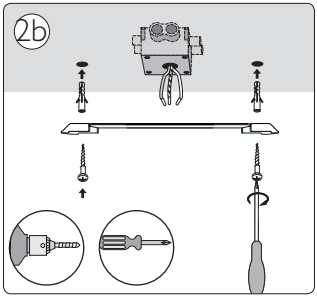

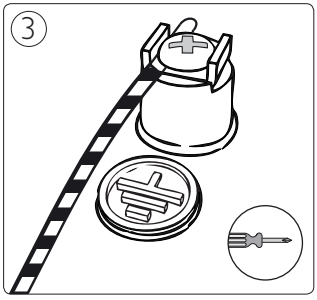

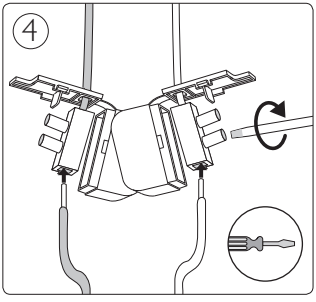

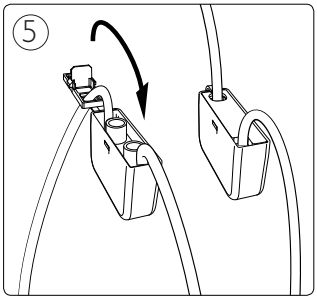

440401822481.indd 3 11/16/2011 10:37:28 AM

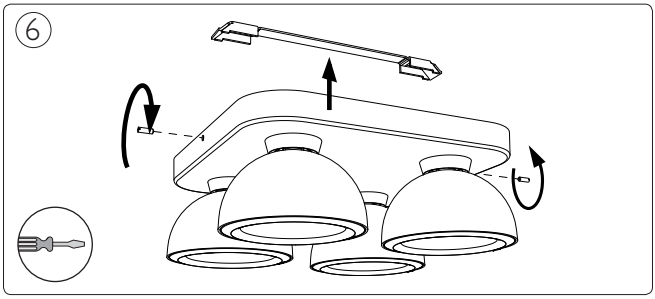

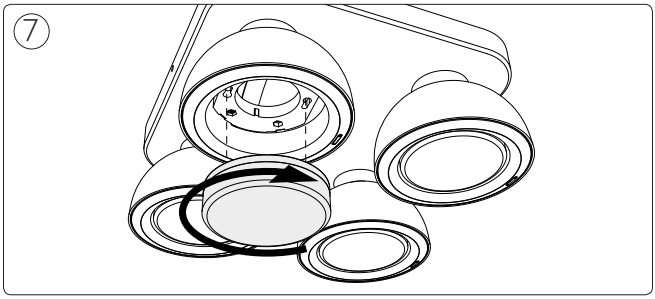

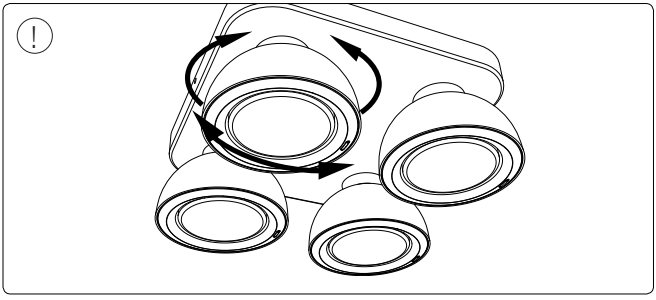

440401822481.indd 4 11/16/2011 10:37:28 AM

440401822481.indd 5 11/16/2011 10:37:28 AM

440401822481.indd 6 11/16/2011 10:37:28 AM

440401822481.indd 7 11/16/2011 10:37:28 AM



Philips Lighting Contact Centre
Int. Business Reply Service
I.B.R.S. / C.C.R.I. Numéro 10461
5600 VB Eindhoven
Pays-Bas / The Netherlands

www.philips.com/homelighting
☎+800 7445 4775

4404.018.22481
Last update: 27/09/11

440401822481.indd 8 11/16/2011 10:37:28 AM