FQ203IXEV



EN Oven

User Manual

Electrolux

CONTENTS

1. SAFETY INFORMATION....3
2. SAFETY INSTRUCTIONS....4
3. PRODUCT DESCRIPTION....7
4. CONTROL PANEL....7
5. BEFORE FIRST USE....9
6. DAILY USE....9
7. CLOCK FUNCTIONS....11
8. AUTOMATIC PROGRAMMES....13
9. USING THE ACCESSORIES....14
10. ADDITIONAL FUNCTIONS....15
11. HINTS AND TIPS....17
12. CARE AND CLEANING....26
13. TROUBLESHOOTING....30
14. INSTALLATION....32
15. ENERGY EFFICIENCY....33

WE'RE THINKING OF YOU

Thank you for purchasing an Electrolux appliance. You've chosen a product that brings with it decades of professional experience and innovation. Ingenious and stylish, it has been designed with you in mind. So whenever you use it, you can be safe in the knowledge that you'll get great results every time.
Welcome to Electrolux.
Visit our website for:

Get usage advice, brochures, trouble shooter, service information:
www.electrolux.com/webselfservice

Register your product for better service:
www.registerelectrolux.com

Buy Accessories, Consumables and Original spare parts for your appliance:
www.electrolux.com/shop

CUSTOMER CARE AND SERVICE

Always use original spare parts.
When contacting our Authorised Service Centre, ensure that you have the following data available: Model, PNC, Serial Number.
The information can be found on the rating plate.

⚠ Warning / Caution-Safety information

ⓘ General information and tips

Environmental information

Subject to change without notice.

1. ⚠ SAFETY INFORMATION

Before the installation and use of the appliance, carefully read the supplied instructions. The manufacturer is not responsible for any injuries or damages that are the result of incorrect installation or usage. Always keep the instructions in a safe and accessible location for future reference.

1.1 Children and vulnerable people safety

- This appliance can be used by children aged from 8 years and above and persons with reduced physical, sensory or mental capabilities or lack of experience and knowledge if they have been given supervision or instruction concerning the use of the appliance in a safe way and understand the hazards involved.
- Do not let children play with the appliance.
- Keep all packaging away from children and dispose of it appropriately.
- Keep children and pets away from the appliance when it operates or when it cools down. Accessible parts are hot.
- If the appliance has a child safety device, this should be activated.
- Children shall not carry out cleaning and user maintenance of the appliance without supervision.
- Children aged 3 years and under must be kept away from this appliance when it is in operation at all times.

1.2 General Safety

- Only a qualified person must install this appliance and replace the cable.
- WARNING: The appliance and its accessible parts become hot during use. Care should be taken to avoid touching heating elements. Children less than 8 years of age shall be kept away unless continuously supervised.

- Always use oven gloves to remove or put in accessories or ovenware.
- Before maintenance cut the power supply.
- Ensure that the appliance is switched off before replacing the lamp to avoid the possibility of electric shock.
- Do not use a steam cleaner to clean the appliance.
- Do not use harsh abrasive cleaners or sharp metal scrapers to clean the glass door since they can scratch the surface, which may result in shattering of the glass.
- If the mains power supply cable is damaged, it must be replaced by the manufacturer, its Authorised Service Centre or similarly qualified persons to avoid an electrical hazard.
- To remove the shelf supports first pull the front of the shelf support and then the rear end away from the side walls. Install the shelf supports in the opposite sequence.

2. SAFETY INSTRUCTIONS

2.1 Installation

WARNING!
Only a qualified person must install this appliance.

- Remove all the packaging.
- Do not install or use a damaged appliance.
- Follow the installation instruction supplied with the appliance.
- Always take care when moving the appliance as it is heavy. Always use safety gloves and enclosed footwear.
- Do not pull the appliance by the handle.
- Keep the minimum distance from the other appliances and units.
- Make sure that the appliance is installed below and adjacent safe structures.
- The sides of the appliance must stay adjacent to appliances or to units with the same height.
- The appliance is equipped with an electric cooling system. It must be operated with the electric power supply.

2.2 Electrical connection

WARNING!
Risk of fire and electrical shock.

- All electrical connections should be made by a qualified electrician.
- The appliance must be earthed.
- Make sure that the electrical information on the rating plate agrees with the power supply. If not, contact an electrician.
- Always use a correctly installed shockproof socket.
- Do not use multi-plug adapters and extension cables.
- Make sure not to cause damage to the mains plug and to the mains

cable. Should the mains cable need to be replaced, this must be carried out by our Authorised Service Centre.
- Do not let mains cables touch or come near the appliance door, especially when the door is hot.
- The shock protection of live and insulated parts must be fastened in such a way that it cannot be removed without tools.
- Connect the mains plug to the mains socket only at the end of the installation. Make sure that there is access to the mains plug after the installation.
- If the mains socket is loose, do not connect the mains plug.
- Do not pull the mains cable to disconnect the appliance. Always pull the mains plug.
- Use only correct isolation devices: line protecting cut-outs, fuses (screw type fuses removed from the holder), earth leakage trips and contactors.
- The electrical installation must have an isolation device which lets you disconnect the appliance from the mains at all poles. The isolation device must have a contact opening width of minimum 3 mm.
- This appliance complies with the E.E.C. Directives.

2.3 Use

WARNING!
Risk of injury, burns and electrical shock or explosion.

- This appliance is for household use only.
- Do not change the specification of this appliance.
- Make sure that the ventilation openings are not blocked.
- Do not let the appliance stay unattended during operation.
- Deactivate the appliance after each use.
- Be careful when you open the appliance door while the appliance is in operation. Hot air can release.
- Do not operate the appliance with wet hands or when it has contact with water.
- Do not apply pressure on the open door.
- Do not use the appliance as a work surface or as a storage surface.
- Open the appliance door carefully. The use of ingredients with alcohol can cause a mixture of alcohol and air.
- Do not let sparks or open flames to come in contact with the appliance when you open the door.
- Do not put flammable products or items that are wet with flammable products in, near or on the appliance.

WARNING!
Risk of damage to the appliance.

- To prevent damage or discoloration to the enamel:
  - do not put ovenware or other objects in the appliance directly on the bottom.
  - do not put aluminium foil directly on the bottom of the appliance.
  - do not put water directly into the hot appliance.
  - do not keep moist dishes and food in the appliance after you finish the cooking.
  - be careful when you remove or install the accessories.
- Discoloration of the enamel has no effect on the performance of the appliance.
- Use a deep pan for moist cakes. Fruit juices cause stains that can be permanent.
- This appliance is for cooking purposes only. It must not be used for other purposes, for example room heating.
- Always cook with the oven door closed.
- If the appliance is installed behind a furniture panel (e.g. a door) make sure the door is never closed when the appliance is in operation. Heat and moisture can build up behind a closed furniture panel and cause subsequent damage to the appliance, the housing unit or the floor. Do not close the furniture panel until the appliance has cooled down completely after use.

2.4 Care and cleaning

WARNING!
Risk of injury, fire, or damage to the appliance.

- Before maintenance, deactivate the appliance and disconnect the mains plug from the mains socket.
- Make sure the appliance is cold. There is the risk that the glass panels can break.
- Replace immediately the door glass panels when they are damaged. Contact the Authorised Service Centre.
- Be careful when you remove the door from the appliance. The door is heavy!
- Clean regularly the appliance to prevent the deterioration of the surface material.
- Clean the appliance with a moist soft cloth. Only use neutral detergents. Do not use any abrasive products, abrasive cleaning pads, solvents or metal objects.
- If you use an oven spray, obey the safety instructions on the packaging.
- Do not clean the catalytic enamel (if applicable) with any kind of detergent.

2.5 Internal light

- The type of light bulb or halogen lamp used for this appliance is only for household appliances. Do not use it for house lighting.

WARNING!
Risk of electrical shock.

- Before replacing the lamp, disconnect the appliance from the power supply.
- Only use lamps with the same specifications.

2.6 Disposal

WARNING!
Risk of injury or suffocation.

- Disconnect the appliance from the mains supply.
- Cut off the mains electrical cable close to the appliance and dispose of it.
- Remove the door catch to prevent children or pets from becoming trapped in the appliance.

2.7 Service

- To repair the appliance contact an Authorised Service Centre.
- Use original spare parts only.

3. PRODUCT DESCRIPTION

3.1 General overview

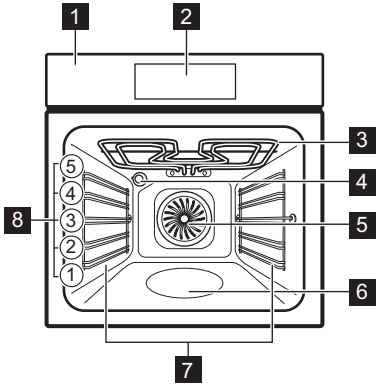

1 Control panel
2 Electronic programmer
3 Heating element
4 Lamp
5 Fan
6 Aqua cleaning container
7 Shelf support, removable
8 Shelf positions

3.2 Accessories

- **Wire shelf**
  For cookware, cake tins, roasts.
- **Aluminium baking tray**
  For cakes and biscuits.
- **Grill- / Roasting pan**
  To bake and roast or as pan to collect fat.

4. CONTROL PANEL

4.1 Electronic programmer



Use the sensor fields to operate the appliance.

	Sensor Field	Function	Description
1	⏻	ON / OFF	To activate and deactivate the appliance.
2	□	OPTIONS	To set an oven function or an automatic programme.
3	☼	OVEN LIGHT	To activate or deactivate the oven lamp.

	Sensor Field	Function	Description
4	>>3s	TEMPERATURE / FAST HEAT UP	To set and examine the cavity temperature or the core temperature sensor temperature (if present). If you press it and hold for three seconds, it turns the Fast heat up function ON and OFF.
5		MY FAVOURITE PROGRAMME	To store your favourite programme. Use it to access your favourite programme directly, also when the appliance is off.
6	-	DISPLAY	Shows the current settings of the appliance.
7		UP	To move up in the menu.
8		DOWN	To move down in the menu.
9		CLOCK	To set the clock functions.
10		MINUTE MINDER	To set the Minute Minder.
11	OK	OK	To confirm the selection or setting.

4.2 Display

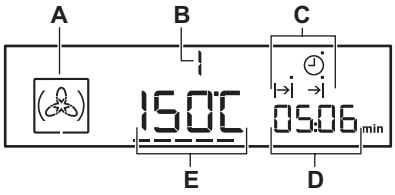

A. Oven function symbol
B. Number of the oven function / programme
C. Indicators for the clock functions (refer to the table "Clock functions")
D. Clock / residual heat display
E. Temperature / time of day display

Other indicators of the display:

Symbol	Name	Description
	Automatic programme	You can choose an automatic programme.
☆	**My favourite programme**	The favourite programme operates.
kg / g	**kg / g**	An automatic programme with weight input operates.
h / min	**h / min**	A clock function operates.

Symbol	Name	Description
⎓	**Heat-up / residual heat indicator**	Shows the temperature level in the appliance.
	Temperature / fast heat up	The function operates.
	Temperature	You can examine or change the temperature.
	Minute minder	The minute minder function operates.

4.3 Heat up indicator

If you activate an oven function, the bars ⎓ come on in the display. The bars show that the temperature in the appliance increases or decreases.

When the appliance is at the set temperature, the bars go off the display.

5. BEFORE FIRST USE

WARNING!
Refer to Safety chapters.

To set the Time of day refer to "Clock functions" chapter.

5.1 Initial Cleaning

Remove all accessories and removable shelf supports from the appliance.

Refer to "Care and cleaning" chapter.

Clean the appliance and the accessories before first use.

Put the accessories and the removable shelf supports back to their initial position.

5.2 Preheating

Preheat the empty appliance before first use.

1. Set the function Top / Bottom Heat ⎓ and the maximum temperature.
2. Let the appliance operate for 1 hour.
3. Set the function True Fan Cooking and the maximum temperature.
4. Let the appliance operate for 15 minutes.

Accessories can become hotter than usual. The appliance can emit an odour and smoke. This is normal. Make sure that the airflow in the room is sufficient.

6. DAILY USE

WARNING!
Refer to Safety chapters.

6.1 Operating the appliance

To operate the appliance you can use:

- **the manual mode**
- **automatic programmes**

6.2 Oven functions

Oven function		Application
	True Fan Cooking	To bake on up to three shelf positions at the same time and to dry food. Set the temperature 20 - 40 °C lower than for Top / Bottom Heat.
	Pizza Setting	To bake food on one shelf position for a more intensive browning and a crispy bottom. Set the temperature 20 - 40 °C lower than for Top / Bottom Heat.
	Top / Bottom Heat	To bake and roast food on one shelf position.
	Slow Cooking	To prepare tender, succulent roasts.
	Bottom Heat	To bake cakes with crispy bottom and to preserve food.
	Moist Fan Baking	To prepare baked goods in tin on one shelf position. To save energy during cooking. This function must be used in accordance with the cooking tables in order to achieve the desired cooking result. To get more information about the recommended settings, refer to the cooking tables. This function was used to define the energy efficiency class acc. to EN 60350-1.
	Defrost	This function can be used for defrosting frozen foods, such as vegetables and fruits. The defrosting time depends on the amount and size of the frozen food.
	Keep Warm	To keep food warm.
	ECO Roasting	When you use this function during cooking, it allows you to optimize the energy consumption. To get more information about the recommended settings, refer to the cooking tables with the equivalent function (Turbo Grilling).
	Grilling	To grill flat food and to toast bread.
	Fast Grilling	To grill flat food in large quantities and to toast bread.
	Turbo Grilling	To roast larger meat joints or poultry with bones on one shelf position. Also to make gratins and to brown.

6.3 Setting the oven function

1. Activate the appliance with ⏻.

The display shows the set temperature, the symbol and the number of the oven function.

2. Touch ∧ or ∨ to set an oven function.
3. Touch OK or the appliance starts automatically after five seconds.

If you activate the appliance and do not set an oven function or programme, the appliance deactivates automatically after 20 seconds.

6.4 Changing the temperature

Touch ∧ or ∨ to change the temperature in steps of 5 °C.
When the appliance is at the set temperature, an acoustic signal sounds three times and the Heat up indicator goes out.

6.5 Checking the temperature

You can see the temperature in the appliance when the function or programme operates.

1. Touch »3s.

The Temperature / Time display shows the temperature in the appliance.

2. Touch OK to go back to the set temperature or the display shows it automatically after five seconds.

6.6 Fast heat up function

Do not put food in the oven when the Fast heat up function operates.

The Fast heat up function is not available with every oven function. An acoustic signal sounds if the Fast heat up function is not available for the set function if Faulty tone is activated in the settings menu. Refer to "Using the settings menu".

The Fast heat up function decreases the heat up time.

To activate the Fast heat up function touch and hold »3s for more than three seconds.
If you activate the Fast heat up function, horizontal bars on the display flash to show that the function operates.

7. CLOCK FUNCTIONS

7.1 Clock functions table

Clock function		Application
🕘	TIME OF DAY	To show or change the time of day. You can change the time of day only when the appliance is on.
|→|	DURATION	To set how long the appliance operates.
→|	END	To set when the appliance deactivates.
|→|→|	TIME DELAY	To combine DURATION and END function.
🔔	MINUTE MINDER	To set a countdown time. This function has no effect on the operation of the oven. You can set the MINUTE MINDER at any time and also when the appliance is off.

Clock function		Application
00:00	COUNT UP TIMER	To set the count up, which shows how long the appliance operates. This function has no effect on the operation of the appliance. It is on immediately when the oven starts to heat. The COUNT UP TIMER is not activated if DURATION and END are set.

7.2 Setting and changing the time

After the first connection to the mains, wait until the display shows h and **12:00**. "**12**" flashes.

1. Touch ∧ or ∨ to set the hours.
2. Touch OK.
3. Touch ∧ or ∨ to set the minutes.
4. Touch OK or ◴.

The display shows the new time.

To change the time of day touch ◴ again and again until ◴ starts to flash.

7.3 Setting the DURATION

1. Set an oven function and temperature.
2. Touch ◴ again and again until |→| starts to flash.
3. Use ∧ or ∨ to set the minutes for DURATION time.
4. Touch OK or the DURATION time starts automatically after 5 seconds.
5. Use ∧ or ∨ to set the hours for DURATION time.
6. Touch OK. The DURATION time starts automatically after 5 seconds.

When the set time ends, an acoustic signal sounds for 2 minutes. |→| and time setting flash in the display. The appliance deactivates.

7. Touch a sensor field to stop the acoustic signal.
8. Turn off the appliance.

7.4 Setting the END

1. Set an oven function and temperature.
2. Touch ◴ again and again until →| starts to flash.
3. Use ∧ or ∨ to set the END and OK to confirm. First you set the minutes and then the hours.

When the set time ends, an acoustic signal sounds for 2 minutes. →| and the time setting flash in the display. The appliance deactivates automatically.

4. Touch a sensor field to stop the acoustic signal.
5. Turn off the appliance.

7.5 Setting the TIME DELAY function

1. Set an oven function and temperature.
2. Touch ◴ again and again until |→| starts to flash.
3. Use ∧ or ∨ to set the minutes for DURATION.
4. Touch OK.
5. Use ∧ or ∨ to set the hours for DURATION.
6. Touch OK, the appliance switches to the setting of the END function.

The display shows flashing →|.

7. Use ∧ or ∨ to set the END and OK to confirm. First you set the minutes and then the hours.

Appliance turns on automatically later on, works for the set DURATION time and stops at the set END time. At the set time an acoustic signal sounds for 2 minutes. →| and the time setting flash in the display. The appliance deactivates automatically.

8. Touch a sensor field to stop the acoustic signal.

9. Turn off the appliance.

When the Time delay function is activated, the display shows a static symbol of the oven function, |→| with a dot and →|. The dot shows which clock function is on in the Clock / residual heat display.

7.6 Setting the MINUTE MINDER

1. Touch 🔔.

🔔 and "00" flash in the display.

2. Use 🔔 to switch between options. First you set the seconds, then the minutes and the hours.
3. Use ∧ or ∨ to set the MINUTE MINDER and 🔔 to confirm.
4. Touch OK or the MINUTE MINDER starts automatically after 5 seconds.

When the set time ends, an acoustic signal sounds for 2 minutes and 00:00 and 🔔 flash in the display.

5. Touch a sensor field to stop the acoustic signal.

7.7 COUNT UP TIMER

To reset the Count Up Timer, touch ∨ and ∧ at the same time until the display shows "00:00" and the Count Up Timer starts to count up again.

8. AUTOMATIC PROGRAMMES

WARNING!
Refer to Safety chapters.

There are 9 automatic programmes. Use an automatic programme or recipe when you do not have the knowledge or experience on how to prepare a dish. The display shows the default cooking times for all automatic programmes.

8.1 Automatic programmes

Programme number	Programme name
1	ROAST BEEF
2	ROAST PORK
3	CHICKEN, WHOLE
4	PIZZA
5	MUFFINS
6	QUICHE LORRAINE
7	WHITE BREAD
8	POTATO GRATIN
9	LASAGNE

8.2 Automatic programmes

1. Activate the appliance.
2. Touch ☐.

The display shows the number of the automatic programme (1 – 9).

3. Touch ∧ or ∨ to choose the automatic programme.

4. Touch OK or wait five seconds until the appliance automatically starts to work.
5. When the set time ends, an acoustic signal sounds for two minutes. The symbol |→| flashes.
6. Touch a sensor field to stop the acoustic signal.
7. Deactivate the appliance.

8.3 Automatic programmes with weight input

If you set the weight of the meat, the appliance calculates the roasting time.

1. Activate the appliance.
2. Touch □.
3. Touch ∧ or ∨ to set the weight programme.

The display shows: the cooking time, the duration symbol |→|, a default weight, a unit of measurement (kg, g).

4. Touch OK or the settings save automatically after five seconds.

The appliance activates.

5. You can change the default weight value with ∧ or ∨. Touch OK.
6. When the set time ends, an acoustic signal sounds for two minutes. |→| flashes.
7. Touch a sensor field to stop the acoustic signal.
8. Deactivate the appliance.

9. USING THE ACCESSORIES

WARNING!
Refer to Safety chapters.

9.1 Inserting the accessories

Wire shelf:

Push the shelf between the guide bars of the shelf support and make sure that the feet point down.

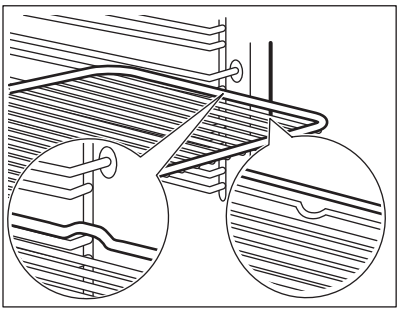

Deep pan:

Push the deep pan between the guide bars of the shelf support.

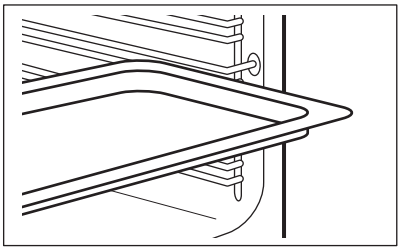

Wire shelf and the deep pan together:

Push the deep pan between the guide bars of the shelf support and the wire shelf on the guide bars above and make sure that the feet point down.

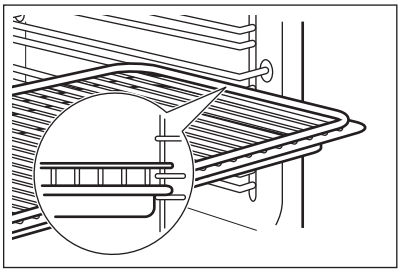

Small indentation at the top increase safety. The indentations are also anti-tip devices. The high rim around the shelf prevents cookware from slipping of the shelf.

10. ADDITIONAL FUNCTIONS

10.1 Using My Favourite Programme function

Use this function to save your favourite temperature and time settings for an oven function or programme.

1. Set the temperature and time for an oven function or programme.
2. Touch and hold ☆ for more than three seconds. An acoustic signal sounds.
3. Deactivate the appliance.

- **To activate the function** touch ☆. The appliance activates your favourite programme.

When the function operates, you can change the time and temperature.

- **To deactivate the function** touch ⏻. The appliance deactivates your favourite programme.

10.2 Using the Child Lock

The Child Lock prevents an accidental operation of the appliance.

1. To activate the function deactivate the appliance with ⏻. Do not set an oven function.
2. Touch and hold 🕘 and ∨ at the same time for 2 seconds.

An acoustic signal sounds.
SAFE comes on in the display.

To deactivate the Child Lock function repeat step 2.

10.3 Using the Function Lock

You can activate the function only when the appliance operates.

The Function Lock prevents an accidental change of the oven function.

1. To activate the function activate the appliance.
2. Activate an oven function or setting.
3. Touch and hold 🕘 and ∨ at the same time for 2 seconds.

An acoustic signal sounds.
Loc comes on in the display.

To deactivate the Function Lock repeat step 3.

You can deactivate the appliance when the Function Lock is on. When you deactivate the appliance, the Function Lock deactivates.

10.4 Using the settings menu

The settings menu lets you activate or deactivate functions in the main menu. The display shows SET and the number of the setting.

	Description	Value to set
1	RESIDUAL HEAT INDICATOR	ON / OFF
2	KEY TONE[1)]	CLICK / BEEP / OFF

	Description	Value to set
3	FAULTY TONE	ON / OFF
4	DEMO MODE	Activation code: 2468
5	SERVICE MENU	-
6	RESTORE SETTINGS	YES / NO

1) It is not possible to deactivate the tone of the ON / OFF sensor field.

1. When the appliance is activated, touch ☐ then touch it again and hold for three seconds.

The display shows SET1 and "1" flashes.

2. Touch ∧ or ∨ to set the setting.
3. Touch OK.
4. Touch ∧ or ∨ to change the value of the setting.
5. Touch OK.

To exit the Settings menu, touch ⏻ or touch and hold ☐.

10.5 Automatic Switch-off

For safety reasons the appliance deactivates automatically after some time if an oven function operates and you do not change any settings.

Temperature (°C)	Switch-off time (h)
30 - 115	12.5
120 - 195	8.5
200 - 245	5.5
250 - maximum	1.5

After the Automatic switch-off, touch a sensor field to operate the appliance again.

The Automatic switch-off does not work with the functions: Light, Slow Cooking, Duration, End, Time delay.

10.6 Brightness of the display

There are two modes of display brightness:

- Night brightness - when the appliance is deactivated, the brightness of the display is lower between 10 PM and 6 AM.
- Day brightness:
  - when the appliance is activated.
  - if you touch a sensor field during the night brightness (apart from ON / OFF), the display goes back to the day brightness mode for the next 10 seconds.
  - if the appliance is deactivated and you set the Minute Minder. When the Minute Minder function ends, the display goes back to the night brightness.

10.7 Cooling fan

When the appliance operates, the cooling fan activates automatically to keep the surfaces of the appliance cool. If you deactivate the appliance, the cooling fan can continue to operate until the appliance cools down.

10.8 Safety thermostat

Incorrect operation of the appliance or defective components can cause dangerous overheating. To prevent this, the oven has a safety thermostat which interrupts the power supply. The oven activates again automatically when the temperature drops.

11. HINTS AND TIPS

WARNING!
Refer to Safety chapters.

The temperature and baking times in the tables are guidelines only. They depend on the recipes and the quality and quantity of the ingredients used.

11.1 General information

- The appliance has five shelf positions. Count the shelf positions from the bottom of the appliance floor.
- The appliance has a special system which circulates the air and constantly recycles the steam. With this system you can cook in a steamy environment and keep the food soft inside and crusty outside. It decreases the cooking time and energy consumption to a minimum.
- Moisture can condense in the appliance or on the door glass panels. This is normal. Always stand back from the appliance when you open the appliance door while cooking. To decrease the condensation, operate the appliance for 10 minutes before cooking.
- Clean the moisture after each use of the appliance.
- Do not put the objects directly on the appliance floor and do not put aluminium foil on the components when you cook. This can change the baking results and cause damage to the enamel.

11.2 Baking cakes

- Do not open the oven door before 3/4 of the set cooking time is up.
- If you use two baking trays at the same time, keep one empty level between them.

11.3 Cooking meat and fish

- Use a deep pan for very fatty food to prevent the oven from stains that can be permanent.
- Leave the meat for approximately 15 minutes before carving so that the juice does not seep out.
- To prevent too much smoke in the oven during roasting, add some water into the deep pan. To prevent the smoke condensation, add water each time after it dries up.

11.4 Cooking times

Cooking times depend on the type of food, its consistency, and volume.

Initially, monitor the performance when you cook. Find the best settings (heat setting, cooking time, etc.) for your cookware, recipes and quantities when you use this appliance.

11.5 Baking and roasting table

Cakes

Food	Top / Bottom Heat		True Fan Cooking		Time (min)	Comments
	Temperature (°C)	Shelf position	Temperature (°C)	Shelf position		
Whisked recipes	170	2	160	3 (2 and 4)	45 - 60	In a cake mould
Shortbread dough	170	2	160	3 (2 and 4)	20 - 30	In a cake mould

Food	Top / Bottom Heat		True Fan Cooking		Time (min)	Comments
	Temperature (°C)	Shelf position	Temperature (°C)	Shelf position		
Buttermilk cheesecake	170	1	165	2	80 - 100	In a 26 cm cake mould
Apple cake (Apple pie)[1)]	170	2	160	2 (left and right)	80 - 100	In two 20 cm cake moulds on a wire shelf
Strudel	175	3	150	2	60 - 80	In a baking tray
Jam-tart	170	2	165	2 (left and right)	30 - 40	In a 26 cm cake mould
Sponge cake	170	2	150	2	40 - 50	In a 26 cm cake mould
Christmas cake / Rich fruit cake[1)]	160	2	150	2	90 - 120	In a 20 cm cake mould
Plum cake[1)]	175	1	160	2	50 - 60	In a bread tin
Small cakes - one level[1)]	170	3	150 - 160	3	20 - 30	In a baking tray
Small cakes - two levels[1)]	-	-	140 - 150	2 and 4	25 - 35	In a baking tray
Small cakes - three levels[1)]	-	-	140 - 150	1, 3 and 5	30 - 45	In a baking tray
Biscuits / pastry stripes - one level	140	3	140 - 150	3	25 - 45	In a baking tray

Food	Top / Bottom Heat		True Fan Cooking		Time (min)	Comments
	Temperature (°C)	Shelf position	Temperature (°C)	Shelf position		
Biscuits / pastry stripes - two levels	-	-	140 - 150	2 and 4	35 - 40	In a baking tray
Biscuits / pastry stripes - three levels	-	-	140 - 150	1, 3 and 5	35 - 45	In a baking tray
Meringues - one level	120	3	120	3	80 - 100	In a baking tray
Meringues - two levels[1)]	-	-	120	2 and 4	80 - 100	In a baking tray
Buns[1)]	190	3	190	3	12 - 20	In a baking tray
Eclairs - one level	190	3	170	3	25 - 35	In a baking tray
Eclairs - two levels	-	-	170	2 and 4	35 - 45	In a baking tray
Plate tarts	180	2	170	2	45 - 70	In a 20 cm cake mould
Rich fruit cake	160	1	150	2	110 - 120	In a 24 cm cake mould
Victoria sandwich[1)]	170	1	160	2 (left and right)	30 - 50	In a 20 cm cake mould

[1)] Preheat the oven for 10 minutes.

Bread and pizza

Food	Top / Bottom Heat		True Fan Cooking		Time (min)	Comments
	Temperature (°C)	Shelf position	Temperature (°C)	Shelf position		
White bread[1)]	190	1	190	1	60 - 70	1 - 2 pieces, 500 gr per piece

Food	Top / Bottom Heat		True Fan Cooking		Time (min)	Comments
	Temperature (°C)	Shelf position	Temperature (°C)	Shelf position		
Rye bread	190	1	180	1	30 - 45	In a bread tin
Bread rolls[1)]	190	2	180	2 (2 and 4)	25 - 40	6 - 8 rolls in a baking tray
Pizza[1)]	230 - 250	1	230 - 250	1	10 - 20	In a baking tray or a deep pan
Scones[1)]	200	3	190	3	10 - 20	In a baking tray

1) Preheat the oven for 10 minutes.

Flans

Food	Top / Bottom Heat		True Fan Cooking		Time (min)	Comments
	Temperature (°C)	Shelf position	Temperature (°C)	Shelf position		
Pasta flan	200	2	180	2	40 - 50	In a mould
Vegetable flan	200	2	175	2	45 - 60	In a mould
Quiches[1)]	180	1	180	1	50 - 60	In a mould
Lasagne[1)]	180 - 190	2	180 - 190	2	25 - 40	In a mould
Cannelloni[1)]	180 - 190	2	180 - 190	2	25 - 40	In a mould

1) Preheat the oven for 10 minutes.

Meat

Food	Top / Bottom Heat		True Fan Cooking		Time (min)	Comments
	Temperature (°C)	Shelf position	Temperature (°C)	Shelf position		
Beef	200	2	190	2	50 - 70	On a wire shelf
Pork	180	2	180	2	90 - 120	On a wire shelf
Veal	190	2	175	2	90 - 120	On a wire shelf

Food	Top / Bottom Heat		True Fan Cooking		Time (min)	Comments
	Temperature (°C)	Shelf position	Temperature (°C)	Shelf position		
English roast beef, rare	210	2	200	2	50 - 60	On a wire shelf
English roast beef, medium	210	2	200	2	60 - 70	On a wire shelf
English roast beef, well done	210	2	200	2	70 - 75	On a wire shelf
Shoulder of pork	180	2	170	2	120 - 150	With rind
Shin of pork	180	2	160	2	100 - 120	2 pieces
Lamb	190	2	175	2	110 - 130	Leg
Chicken	220	2	200	2	70 - 85	Whole
Turkey	180	2	160	2	210 - 240	Whole
Duck	175	2	220	2	120 - 150	Whole
Goose	175	2	160	1	150 - 200	Whole
Rabbit	190	2	175	2	60 - 80	Cut in pieces
Hare	190	2	175	2	150 - 200	Cut in pieces
Pheasant	190	2	175	2	90 - 120	Whole

Fish

Food	Top / Bottom Heat		True Fan Cooking		Time (min)	Comments
	Temperature (°C)	Shelf position	Temperature (°C)	Shelf position		
Trout / Sea bream	190	2	175	2	40 - 55	3 - 4 fish
Tuna fish / Salmon	190	2	175	2	35 - 60	4 - 6 fillets

11.6 Grilling

Preheat the empty oven for 3 minutes before cooking.

Food	Quantity		Tempera-ture (°C)	Time (min)		Shelf po-sition
	Pieces	(g)		1st side	2nd side	
Fillet steaks	4	800	max.	12 - 15	12 - 14	4
Beef steaks	4	600	max.	10 - 12	6 - 8	4
Sausages	8	-	max.	12 - 15	10 - 12	4
Pork chops	4	600	max.	12 - 16	12 - 14	4
Chicken (cut in 2)	2	1000	max.	30 - 35	25 - 30	4
Kebabs	4	-	max.	10 - 15	10 - 12	4
Breast of chicken	4	400	max.	12 - 15	12 - 14	4
Hambur-ger	6	600	max.	20 - 30	-	4
Fish fillet	4	400	max.	12 - 14	10 - 12	4
Toasted sandwich-es	4 - 6	-	max.	5 - 7	-	4
Toast	4 - 6	-	max.	2 - 4	2 - 3	4

11.7 Turbo Grilling

Beef

Food	Quantity	Temperature (°C)	Time (min)	Shelf position
Roast beef or fillet, rare[1)]	per cm of thickness	190 - 200	5 - 6	1 or 2
Roast beef or fillet, medium[1)]	per cm of thickness	180 - 190	6 - 8	1 or 2
Roast beef or fillet, well done[1)]	per cm of thickness	170 - 180	8 - 10	1 or 2

1) Preheat the oven.

Pork

Food	Quantity (kg)	Temperature (°C)	Time (min)	Shelf position
Shoulder, neck, ham joint	1 - 1.5	160 - 180	90 - 120	1 or 2
Chop, spare rib	1 - 1.5	170 - 180	60 - 90	1 or 2
Meat loaf	0.75 - 1	160 - 170	50 - 60	1 or 2
Pork knuckle (pre-cooked)	0.75 - 1	150 - 170	90 - 120	1 or 2

Veal

Food	Quantity (kg)	Temperature (°C)	Time (min)	Shelf position
Roast veal	1	160 - 180	90 - 120	1 or 2
Knuckle of veal	1.5 - 2	160 - 180	120 - 150	1 or 2

Lamb

Food	Quantity (kg)	Temperature (°C)	Time (min)	Shelf position
Leg of lamb, roast lamb	1 - 1.5	150 - 170	100 - 120	1 or 2
Saddle of lamb	1 - 1.5	160 - 180	40 - 60	1 or 2

Poultry

Food	Quantity (kg)	Temperature (°C)	Time (min)	Shelf position
Poultry portions	0.2 - 0.25 each	200 - 220	30 - 50	1 or 2
Chicken, half	0.4 - 0.5 each	190 - 210	35 - 50	1 or 2
Chicken, poulard	1 - 1.5	190 - 210	50 - 70	1 or 2
Duck	1.5 - 2	180 - 200	80 - 100	1 or 2
Goose	3.5 - 5	160 - 180	120 - 180	1 or 2
Turkey	2.5 - 3.5	160 - 180	120 - 150	1 or 2
Turkey	4 - 6	140 - 160	150 - 240	1 or 2

Fish (steamed)

Food	Quantity (kg)	Temperature (°C)	Time (min)	Shelf position
Whole fish	1 - 1.5	210 - 220	40 - 60	1 or 2

11.8 Moist Fan Baking

During cooking, open the appliance door only when necessary.

Food	Temperature (°C)	Time (min)	Shelf position
Pasta gratin	190 - 200	45 - 55	2
Potato gratin	160 - 170	60 - 75	2
Moussaka	180 - 200	75 - 90	2
Lasagne	160 - 170	55 - 70	2
Cannelloni	170 - 190	65 - 75	2
Bread pudding	150 - 160	75 - 90	2
Rice pudding	170 - 190	45 - 60	2
Apple cake	150 - 160	75 - 85	2
White bread	180 - 190	50 - 60	2

11.9 Slow Cooking

Use this function to prepare lean, tender pieces of meat and fish. This function is not applicable to such recipes as pot roast or fatty roast pork.

In the first 10 minutes you can set an oven temperature between 80 °C and 150 °C. The default is 90 °C. After the temperature is set, the oven continues to cook at 80 °C. Do not use this function for poultry.

Always cook without a lid when you use this function.

1. Sear the meat in a pan on the hob on a very high setting for 1 - 2 minutes on each side.
2. Put the meat together with the hot roasting pan into the oven on the wire shelf.
3. Select the function Slow Cooking.

Food	Quantity	Temperature (°C)	Time (min)	Shelf position
Roast beef	1000 - 1500 g	120	120 - 150	1
Fillet of beef	1000 - 1500 g	120	90 - 150	3
Roast veal	1000 - 1500 g	120	120 - 150	1
Steaks	200 - 300 g	120	20 - 40	3

11.10 Defrost

Food	Quantity (g)	Defrosting time (min)	Further defrosting time (min)	Comments
Chicken	1000	100 - 140	20 - 30	Place the chicken on an upturned saucer placed on a large plate. Turn halfway through.
Meat	1000	100 - 140	20 - 30	Turn halfway through.
Meat	500	90 - 120	20 - 30	Turn halfway through.
Trout	150	25 - 35	10 - 15	-
Strawberries	300	30 - 40	10 - 20	-
Butter	250	30 - 40	10 - 15	-
Cream	2 x 200	80 - 100	10 - 15	Cream can also be whipped when still slightly frozen in places.
Gateau	1400	60	60	-

11.11 Preserving - Bottom Heat

- Use only preserve jars of the same dimensions available on the market.
- Do not use jars with twist-off and bayonet type lids or metal tins.
- Use the first shelf from the bottom for this function.
- Put no more than six one-litre preserve jars on the baking tray.
- Fill the jars equally and close with a clamp.
- The jars cannot touch each other.
- Put approximately 1/2 litre of water into the baking tray to give sufficient moisture in the oven.
- When the liquid in the jars starts to simmer (after approximately 35 - 60 minutes with one-litre jars), stop the oven or decrease the temperature to 100 °C (see the table).

Soft fruit

Food	Temperature (°C)	Cooking time until simmering (min)	Continue to cook at 100 °C (min)
Strawberries / Blueberries / Raspberries / Ripe gooseberries	160 - 170	35 - 45	-

Stone fruit

Food	Temperature (°C)	Cooking time until simmering (min)	Continue to cook at 100 °C (min)
Pears / Quinces / Plums	160 - 170	35 - 45	10 - 15

Vegetables

Food	Temperature (°C)	Cooking time until simmering (min)	Continue to cook at 100 °C (min)
Carrots[1)]	160 - 170	50 - 60	5 - 10
Cucumbers	160 - 170	50 - 60	-
Mixed pickles	160 - 170	50 - 60	5 - 10
Kohlrabi / Peas / Asparagus	160 - 170	50 - 60	15 - 20

1) Leave standing in the oven after it is deactivated.

11.12 Drying - True Fan Cooking

- Cover trays with grease proof paper or baking parchment.
- For a better result, stop the oven halfway through the drying time, open the door and let it cool down for one night to complete the drying.

Vegetables

Food	Temperature (°C)	Time (h)	Shelf position	
			1 position	2 positions
Beans	60 - 70	6 - 8	3	1 / 4
Peppers	60 - 70	5 - 6	3	1 / 4
Vegetables for sour	60 - 70	5 - 6	3	1 / 4
Mushrooms	50 - 60	6 - 8	3	1 / 4
Herbs	40 - 50	2 - 3	3	1 / 4

Fruit

Food	Temperature (°C)	Time (h)	Shelf position	
			1 position	2 positions
Plums	60 - 70	8 - 10	3	1 / 4
Apricots	60 - 70	8 - 10	3	1 / 4
Apple slices	60 - 70	6 - 8	3	1 / 4
Pears	60 - 70	6 - 9	3	1 / 4

12. CARE AND CLEANING

WARNING!
Refer to Safety chapters.

12.1 Notes on cleaning

- Clean the front of the appliance with a soft cloth with warm water and a cleaning agent.

- To clean metal surfaces, use a dedicated cleaning agent.
- Clean the appliance interior after each use. Fat accumulation or other food remains may result in a fire. The risk is higher for the grill pan.
- Clean stubborn dirt with a special oven cleaner.
- Clean all accessories after each use and let them dry. Use a soft cloth with warm water and a cleaning agent.
- If you have nonstick accessories, do not clean them using aggressive agents, sharp-edged objects or a dishwasher. It can cause damage to the nonstick coating.

12.2 Stainless steel or aluminium appliances

Clean the oven door with a damp cloth or sponge only. Dry it with a soft cloth. Do not use steel wool, acids or abrasive materials as they can damage the oven surface. Clean the oven control panel with the same precautions.

12.3 Cleaning the door gasket

- Regularly do a check of the door gasket. The door gasket is around the frame of the oven cavity. Do not use the appliance if the door gasket is damaged. Contact an Authorised Service Centre.
- To clean the door gasket, refer to the general information about cleaning.

12.4 Removing the shelf supports

To clean the oven, remove the shelf supports.

1. Pull the front of the shelf support away from the side wall.

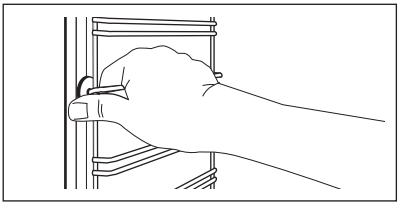

2. Pull the rear end of the shelf support away from the side wall and remove it.

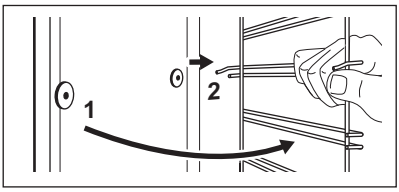

Install the shelf supports in the opposite sequence.

12.5 Aqua Cleaning

The Aqua cleaning procedure uses steam to help remove remaining fat and food particles from the oven.

1. Put 300 ml of water into the Aqua cleaning container at the bottom of the oven.
2. Set the function .
3. Set the temperature to 90 °C.
4. Let the appliance operate for 30 minutes.
5. Deactivate the appliance and let it cool down.
6. When the appliance is cool, clean the inside of the oven with a soft cloth.

WARNING!
Make sure that the appliance is cool before you touch it. There is a risk of burns.

12.6 Cleaning the oven door

The oven door has three glass panels.You can remove the oven door and the internal glass panels to clean them.

The oven door can close if you try to remove the glass panels before you remove the oven door.

CAUTION!
Do not use the appliance without the glass panels.

1. Fully open the door and identify the hinge to the right side of the door.
2. Push the tightening component until it pulls back.

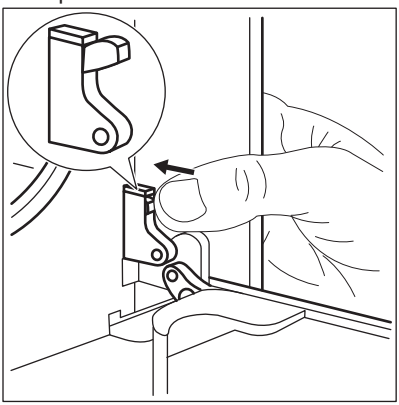

3. Hold the pushed component with one hand. Use a screwdriver with the other hand to lift and turn the right side hinge lever.

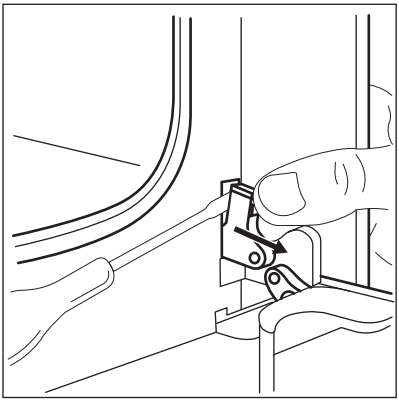

4. Identify the hinge to the left side of the door.

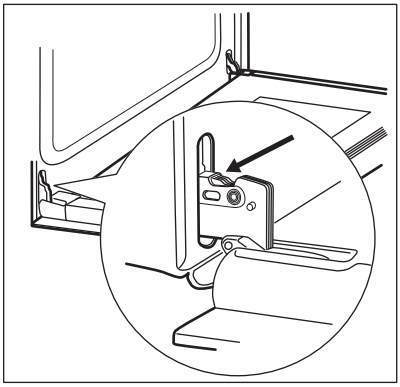

5. Lift and turn the lever on the left hinge.

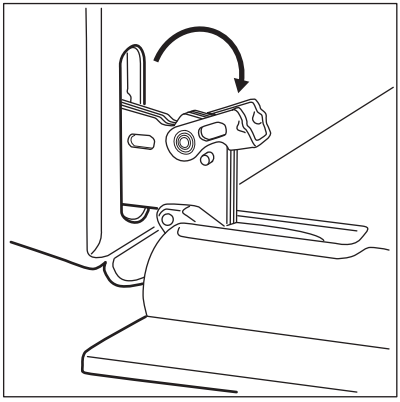

6. Close the oven door halfway to the first opening position. Then pull forward and remove the door from its seat.

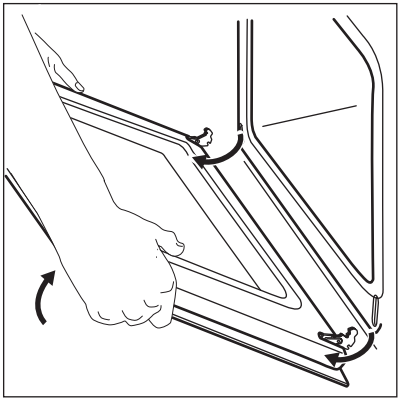

7. Put the door on a soft cloth on a stable surface.
8. Hold the door trim (B) on the top edge of the door at the two sides and push inwards to release the clip seal.

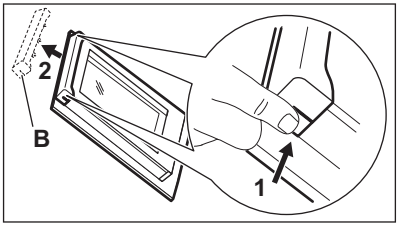

9. Pull the door trim to the front to remove it.
10. Hold the door glass panels by their top edge and carefully pull them out one by one. Start from the top panel. Make sure the glass slides out of the supports completely.

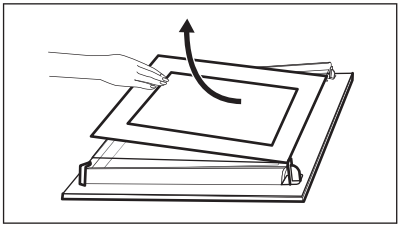

11. Clean the glass panels with water and soap. Dry the glass panels carefully.

When the cleaning is completed, install the glass panels and the oven door. Do the above steps in the opposite sequence.

Make sure that you put the glass panels (A and B) back in the correct sequence. The first panel (A) has a decorative frame. The screen-printing zone must face the inner side of the door. Make sure that after the installation the surface of the glass panel frame (A) on the screen-printing zones is not rough when you touch it.

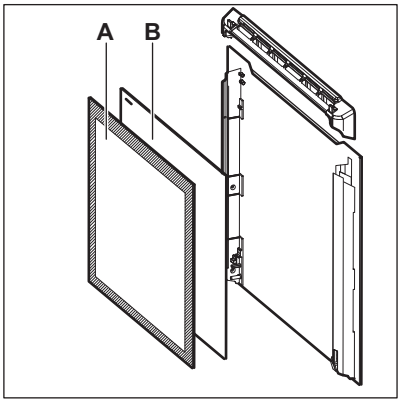

Make sure that you install the middle panel of glass in the seats correctly.

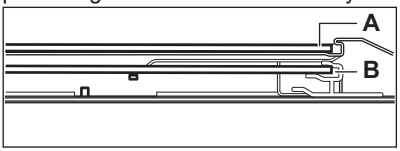

12.7 Retractable handle

The door is supplied with a slow closure system. Do not use force to close the door.

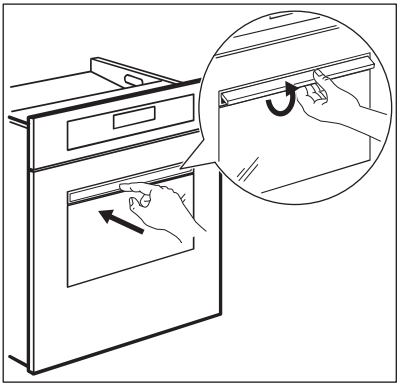

To pull the handle out you must push the center part of it. If you do not need the handle, you can hide it in the appliance door.

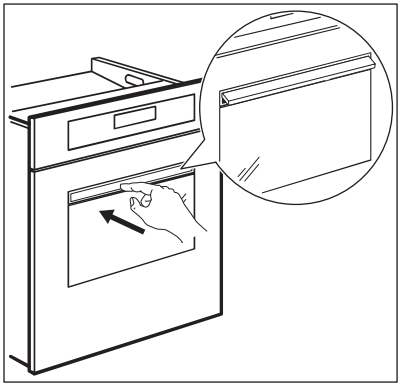

To hide the handle, push the center part of it again.

12.8 Replacing the lamp

Put a cloth on the bottom of the interior of the appliance. It prevents damage to the lamp glass cover and the cavity.

WARNING!
Danger of electrocution!
Disconnect the fuse before you replace the lamp.
The lamp and the lamp glass cover can be hot.

CAUTION!
Always hold the halogen lamp with a cloth to prevent grease residue from burning on the lamp.

1. Deactivate the appliance.
2. Remove the fuses from the fuse box or deactivate the circuit breaker.

The back lamp

1. Turn the lamp glass cover counterclockwise to remove it.
2. Clean the glass cover.
3. Replace the lamp with a suitable 300 °C heat-resistant lamp.
4. Install the glass cover.

13. TROUBLESHOOTING

WARNING!
Refer to Safety chapters.

13.1 What to do if...

Problem	Possible cause	Remedy
You cannot activate or operate the oven.	The oven is not connected to an electrical supply or it is connected incorrectly.	Check if the oven is correctly connected to the electrical supply (refer to the connection diagram if available).
The oven does not heat up.	The oven is deactivated.	Activate the oven.
The oven does not heat up.	The clock is not set.	Set the clock.
The oven does not heat up.	The necessary settings are not set.	Make sure that the settings are correct.
The oven does not heat up.	The automatic switch-off is activated.	Refer to "Automatic switch-off".

Problem	Possible cause	Remedy
The oven does not heat up.	The Child Lock is on.	Refer to "Using the Child Lock".
The oven does not heat up.	The fuse is blown.	Make sure that the fuse is the cause of the malfunction. If the fuse is blown again and again, contact a qualified electrician.
The lamp does not operate.	The lamp is defective.	Replace the lamp.
The display does not show the time during the off status.	The display is deactivated.	Touch ⏲ and ∧ at the same time to activate the display again.
It takes too long to cook the dishes or they cook too quickly.	The temperature is too low or too high.	Adjust the temperature if necessary. Follow the advice in the user manual.
Steam and condensation settle on the food and in the cavity of the oven.	You left the dish in the oven for too long.	Do not leave the dishes in the oven for longer than 15 - 20 minutes after the cooking process ends.
The display shows an error code that is not in this table.	There is an electrical fault.	• Deactivate the oven with the house fuse or the safety switch in the fuse box and activate it again. • If the display shows the error code again, contact the Customer Care Department.
The appliance is activated and does not heat up. The fan does not operate. The display shows **"Demo"**.	The demo mode is activated.	Refer to "Using the settings menu" in "Additional functions" chapter.

13.2 Service data

If you cannot find a solution to the problem yourself, contact your dealer or an Authorised Service Centre.

The necessary data for the service centre is on the rating plate. The rating plate is on the front frame of the appliance cavity. Do not remove the rating plate from the appliance cavity.

We recommend that you write the data here:	
Model (MOD.)	.....

We recommend that you write the data here:	
Product number (PNC)	.....
Serial number (S.N.)	.....

14. INSTALLATION

WARNING!
Refer to Safety chapters.

14.1 Building In

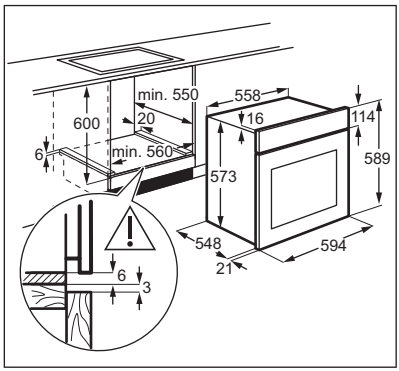

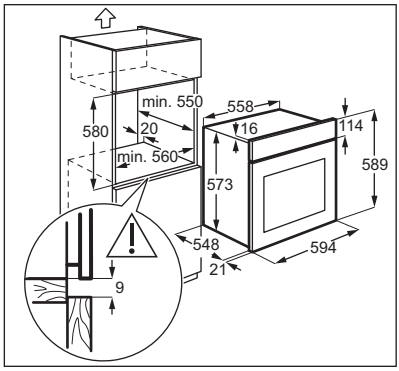

14.2 Securing the appliance to the cabinet

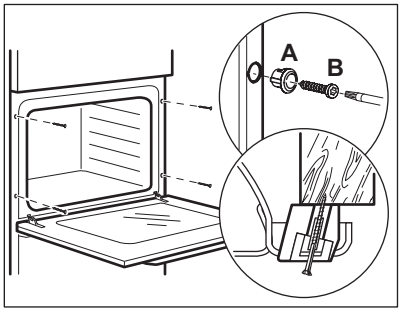

14.3 Electrical installation

The manufacturer is not responsible if you do not follow the safety precautions from the Safety chapters.

This appliance is supplied only with a main cable.

14.4 Cable

Cable types applicable for installation or replacement:

H07 RN-F, H05 RN-F, H05 RRF, H05 VV-F, H05 V2V2-F (T90), H05 BB-F

For the section of the cable refer to the total power on the rating plate. You can also refer to the table:

Total power (W)	Section of the cable (mm^2)
maximum 1380	3 x 0.75
maximum 2300	3 x 1
maximum 3680	3 x 1.5

The earth cord (green / yellow cable) must be 2 cm longer than phase and neutral cables (blue and brown cables).

15. ENERGY EFFICIENCY

15.1 Product Fiche and information according to EU 65-66/2014

Supplier's name	Electrolux
Model identification	FQ203IXEV
Energy Efficiency Index	81.2
Energy efficiency class	A+
Energy consumption with a standard load, conventional mode	0.93 kWh/cycle
Energy consumption with a standard load, fan-forced mode	0.69 kWh/cycle
Number of cavities	1
Heat source	Electricity
Volume	72 l
Type of oven	Built-In Oven
Mass	33.9 kg

EN 60350-1 - Household electric cooking appliances - Part 1: Ranges, ovens, steam ovens and grills - Methods for measuring performance.

15.2 Energy saving

The appliance contains features which help you save energy during everyday cooking.

General hints
Make sure that the oven door is closed properly when the appliance operates and keep it closed as much as possible during the cooking.

Use metal dishes to improve energy saving.

When possible, do not preheat the oven before you put the food inside.

When the cooking duration is longer than 30 minutes, reduce the oven temperature to minimum 3 - 10 minutes before the end of the cooking time, depending on the duration of the cooking. The residual heat inside the oven will continue to cook.

Use the residual heat to warm up other dishes.

Cooking with fan
When possible, use the cooking functions with fan to save energy.

Residual heat
If a programme with the Duration or End Time selection is activated and the cooking time is longer than 30 minutes, the heating elements deactivate automatically 10% faster in some oven functions.

The fan and lamp continue to operate.

Keep food warm
Choose the lowest possible temperature setting to use residual heat and keep a meal warm. The display shows the residual heat indicator or temperature.

Cooking with the lamp off
Deactivate the lamp during cooking and activate only when you need it.

Moist Fan Baking
Function designed to save energy during cooking. It operates in such a way that the temperature in the oven cavity may differ from the temperature indicated on the display during a cooking cycle and cooking times may be different from the cooking times in other programmes.

When you use Moist Fan Baking, the lamp automatically deactivates after 30 seconds. You may activate the lamp again but this action will reduce the expected energy savings.

Deactivating the display
If necessary, you can fully deactivate the display. Touch and at the same time until the display goes out. This step also activates the appliance.

16. ENVIRONMENTAL CONCERNS

Recycle the materials with the symbol . Put the packaging in applicable containers to recycle it. Help protect the environment and human health and to recycle waste of electrical and electronic appliances. Do not dispose appliances marked with the symbol with the household waste. Return the product to your local recycling facility or contact your municipal office.

www.electrolux.com/shop



867340286-A-342016

CE