PH 941MS (IX)/HA

12NC: F070681

GTIN (EAN) code: 8007842706819



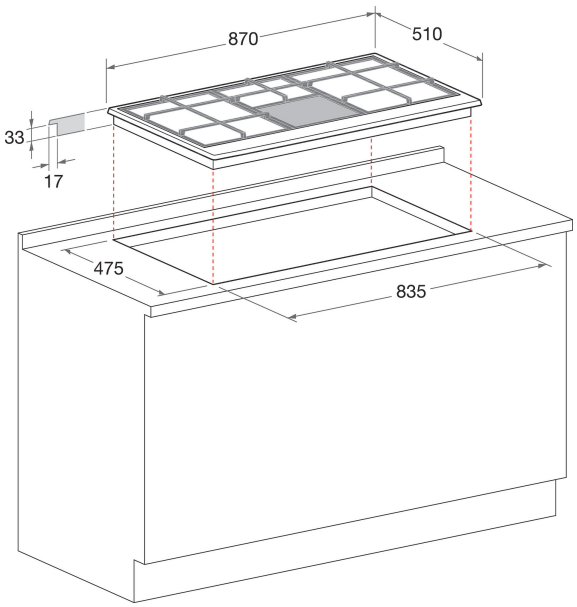

MAIN FEATURES

Product group	Hob
Construction type	Built-in
Type of control	Mechanical
Type of control settings	Knob
Number of gas burners	4
Number of electric cooking zones	1
Number of electric plates	1
Number of radiant plates	0
Number of halogen plates	0
Number of induction plates	0
Number of electric warming zones	0
Location of control panel	Front
Basic surface material	Stainless Steel
Main colour of product	Inox
Electrical connection rating (W)	1000
Gas connection rating (W)	0
Current (A)	4,5
Voltage (V)	220-230
Frequency (Hz)	50/60
Length of Electrical Supply Cord (cm)	100
Plug type	No
Gas connection	N/A
Width of the product	870
Height of the product	33
Depth of the product	510
Minimum niche height	33
Minimum niche width	835
Niche depth	475
Net weight (kg)	11.4
Automatic programmes	No

TECHNICAL FEATURES

Power on indicator	Yes
Number of indicators	1
Type of regulation	Semi-fast
Type of lid	Without
Residual heat indicator	Without
Main on/off switch	No
Safety device	No
Timer	No

PERFORMANCES

Energy input	Mixed