EPSON®
EXCEED YOUR VISION



Epson AcuLaser C9200 Series

High performance A3 colour laser printer for business and graphics art needs

Add quality, versatility and value to your A3 printing with the Epson AcuLaser C9200 Series. Create superb prints in colour and black and white at up to 26 ppm and share high performance printing across a network.

Key benefits:

- Superb quality at high-speed, up to 26 ppm in colour and black and white
- Comprehensive connectivity and printer languages including genuine Adobe® PostScript 3
- Versatile paper handling on a range of media from 350 up to 1,850 sheets
- Preconfigured models include Epson AcuLaser C9200N, Epson AcuLaser C9200DN, Epson AcuLaser C9200DTN, Epson AcuLaser C9200D3TNC

Take your business printing to new levels with the Epson AcuLaser C9200 Series. Maximise speed and quality on everything from A4 office print outs to A3 rich colour graphics with Epson ASIC and Epson Resolution Improvement Technologies.

The ideal A3 colour laser: one of the highest print quality and colour accurate printers on the market thanks to Epson Resolution Improvement Technology

Speed without compromising quality: print up to 26 ppm with fast processing from Epson ASIC technology

Comprehensive connectivity: standard Ethernet 10/100 Base Tx, Hi-Speed USB, Parallel and optional Type B interfaces

Extensive language support: genuine Adobe® PostScript 3™, PCL6, PCL5C, PDF1.6 and ESC/Page as standard

Flexible paper handling: print on a range of media up to A3F, with a paper capacity from 350 to 1,850 sheets

Upgrade to suit your needs: with optional duplex* and up to 3 x 500 sheet paper cassette units**

Standard RAM: 256MB expandable to 768MB. Extra memory and advanced functions thanks to CompactFlash™ support

Handles jobs of any size: faster ripping and first page out with latest Epson technologies including MIT Memory management technology

* Standard on the Epson AcuLaser C9200DN and Epson AcuLaser C9200D3TNC

** Standard on the Epson AcuLaser C9200D3TNC



Epson AcuLaser C9200 Series

Print features	
Resolution	2400RIT (Epson Resolution Improvement Technology)
Print speed	26 ppm in A4 Mono and Colour, 13 ppm in A3 Mono and Colour
First page out	A4 Colour: 11.4 seconds, Mono: 8.1 seconds
Warm up time	109 sec or less
Maximum monthly volume	150,000 pages
Controller specifications	
Processor speed	600 Mhz
Memory (standard/max)	256MB / 768MB
Printer control language emulations	Genuine Adobe Postscript 3, PCL5c, PCL6, PDF1.6, ESC/Page-Color, ESC/Page, FX, ESCP2, I239X
Resident typefaces	Scalable: 84 ESC/Page, 95 PCL5c, 80 PCL6, 136 PS3 Bitmap: 7 ESC/Page, 5 PCL5c, 1 PCL6 Typeface: 10 ESC/P2, 8 FX, 8 I239X
Interfaces and connectivity	
Standard interfaces	Ethernet interface (100Base-TX/10Base-T) USB 2.0HS interface Parallel interface (IEEE 1284 compliant)
Optional interfaces	Type-B, CompactFlash interface
Network printing protocols	**TCP/IP:** LPR, FTP, IPP, PORT2501, PORT9100, WSD **Microsoft Network:** Net BIOS over TCP/IP, Net BIOS over NetBEUI **NetWare:** Standby, NDS Print Server, Bindery Print Server, Remote Printer **AppleTalk**
Network management protocols	**TCP/IP:** SNMP, HTTP, TELNET, DHCP, BOOTP, APIPA, PING, DDNS, mDNS, SNTP, SSDP, ENPC,SLP, WSD, LLTD **Microsoft Network:** Auto-IP, SSDP **MS Network (NetBEUI):** SNMP, ENPC **NetWare:** SNMP **AppleTalk:** SNMP
Control panel	LCD 22 digits x 5 lines
Media handling	
Standard paper input	350 sheets (250 sheet Standard Cassette, 100 sheet MP Tray)
Maximum paper input	1850 sheets (250 sheet Standard Cassette, 100 sheet MP Tray, 3x500 sheet Optional Paper Cassette)
Paper size	A3, A4, A5, B4, B5, Letter, HLT, Legal, B, GLG, GLT, EXE, F4, A3F, custom (width: 90-311.2 mm, length: 139.7-1200 mm), Envelopes (Monarch, Com #10, DL, IB5, C5, C6), Transparency, Labels
Paper weight	64-256 g/m²
Optional paper handling	Duplex Unit, 500 sheet paper cassette (up to 3 can be fittted)
Paper output	500 sheet
Power requirements	
Rated voltage/frequency/current	AC 220-240 V: 50 Hz/60 Hz, Max: 8.0A
Power consumption	Printing: 576Wh, Standby: 146Wh, Sleep: 11Wh, Off: 0Wh
System requirement and OS support	
Hardware languages	
System requirement	PC: Ethernet, USB or Parallel Port, MAC: EtherTalk or USB Port
Windows support	Microsoft Windows 2000 / XP / Server 2003 / Microsoft Windows Vista / XP x64 Edition / Server 2003 x64 Edition / Vista x64 Edition
Mac support	Mac OS 10.3.9 and higher
Linux/Unix/Citrix/SAP/Novell support	For compatibility please refer to http://www.business-solutions.epson.co.uk/Compatible.htm
Additional software	
Drivers and manuals	Printer Driver, Epson Status Monitor, Reference Guide
Software	Network Utilities, Network Guide
Dimensions and weight (WxDxH mm, Kg)	
Hardware	Epson AcuLaser C9200N: 823x608x477 mm, 49.5 Kg
Options	
C12C802502	500 sheet Paper Cassette Unit: 577x548x168 mm, 14.8 Kg
C12C802512	Duplex Unit: 100x440x336 mm, 2.8 Kg
C12C847202	Printer stand: 535x508x96 mm, 8.5 Kg
Environmental conditions	
Temperature	Operation: 10 to 35° C / Storage: 0 to 35 °C
Humidity	Operation: 15 to 85% RH / Storage: 10 to 80% RH
Sound power	Operating: 7.25B (A); Standby: 5.3 B (A)
Sound pressure	Operating: 52dB (A); Standby: 40dB (A)
Safety and regulations	
Safety standards	Low Voltage Directive 2006/95/EC EN60950-1, EN60825-1 GOST-R (IEC60950-1, IEC60825-1)
EMC/EMI	EMC Directive 2004/108/EC, EN 55022 Class B, EN 55024, EN 61000-3-2, EN 61000-3-3, GOST-R (CISPR 22)
Warranty*	
Standard warranty	1 year on-site
Optional warranty	Extension to 3 years (ECPGRP100)

* Warranty offers are not available for all countries. Please contact your local Epson representative.



For further information please contact your local Epson office or visit **www.epson-europe.com**

Austria 0810/20 01 13 (0,07 €/Min.) **Belgium** 070/350120 (0.1735 €/min.) **Czech** 800/142 052 **Denmark** 44 50 85 85 **Finland** 0201 552 091 **France** 09 74 75 04 04 (0,12€/min) **Germany** 01805/23 41 10 (0,14 €/Min.) **Greece** 210-8099499 **Hungary** 06800 147 83 **Ireland** 01 436 7742 **Italy** 02-660321 10 (0,12 €/min.) **Luxemburg** 900/43010 (0,24 €/min.) **Middle East** +9714 8818934 **Netherlands** 0900-5050808 (0.05 €/oproep + 0.15 €/min.) **Norway** 22 06 42 80 **Poland** 0-0-800 4911299 (0,16 zł/min.) **Portugal** 707 222 111 **Russia** (095) 777-03-55 **Slovakia** 0850 111 429 **South Africa** (+2711) 465-9621 **Spain** 93 582 15 00 **Sweden** 0771-400135 (Mobilsamtal – 0,99 kr/min, Lokala samtal – 0,30 kr/min, Utlandssamtal – 0,89 kr/min) **Switzerland** 0848 448820 (4-8 cent./min.) **Turkey** (0212) 3360303 **United Kingdom** 0871 222 6702

Trademarks and registered trademarks are the property of Seiko Epson Corporation or their respective owners.
Product information is subject to change without prior notice.

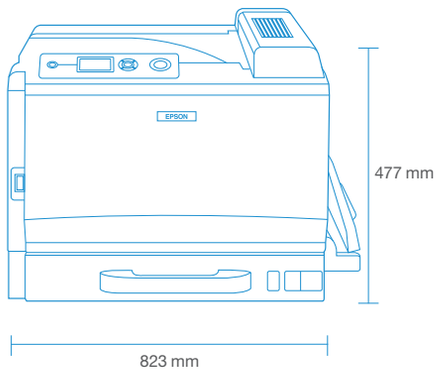

Model configurations

Epson AcuLaser C9200N Main model	C11CA15011BZ
Epson AcuLaser C9200DN Main model + Duplex unit	C11CA15011BY
Epson AcuLaser C9200DTN Main model + Duplex Unit + 500 sheet paper cassette unit	C11CA15011BX
Epson AcuLaser C9200D3TNC Main model + Duplex Unit + 3 x 500 sheet paper cassette unit + printer stand	C11CA15011BW



printer stand

Supplies

Toner Cartridge (Yellow) 14,000 pages*	C13S050474
Toner Cartridge (Magenta) 14,000 pages*	C13S050475
Toner Cartridge (Cyan) 14,000 pages*	C13S050476
Toner Cartridge (Black) 21,000 pages*	C13S050477
Photoconductor Unit (Yellow) 30,000 pages*	C13S051175
Photoconductor Unit (Magenta) 30,000 pages*	C13S051176
Photoconductor Unit (Cyan) 30,000 pages*	C13S051177
Photoconductor Unit (Black) 50,000 pages*	C13S501178
Waste Toner Collector 21,000 pages*	C13S050478



Options

500-Sheet Paper cassette unit	C12C802502
Duplex unit	C12C802512
Printer Stand	C12C847202
128MB additional Memory	7012051
256MB additional Memory	7012079
512MB additional Memory	7012080

* Figures are approximate and are based on the number of A4 sheets printed at 5% coverage under conditions of continuous printing. Intermittent use may reduce page yield.