FPMA-W120

Neomounts by Newstar TV/Monitor Wall Mount (tiltable) for 10"-40" Screen - Silver

NEOMOUNTS BY NEWSTAR TV WALL MOUNT



SPECIFICATIONS

Color	Silver
Distance to wall	7 cm
Height adjustment	None
Max. screen size	40
Max. weight	35
Min. screen size	10
Min. weight	0
Screens	1
Tilt (degrees)	20°
Type	Tilt
VESA maximum	200x200 mm
VESA minimum	100x100 mm
VESA pattern	100x100 100x200 200x100 200x200 75x75
Warranty	5 year
EAN code	8717371440831

The Neomounts by Newstar wall mount, model FPMA-W120 is a tiltable wall mount for flat screens up to 40?. This mount is a great choice when you want the ultimate viewing flexibility with your flat screen. Effortless pull the display out from the wall, position it in almost any direction, turn it around corners and then smoothly return it to the wall when finished.

Neomounts by Newstars? tilt (30°) technology allows the mount to change to any viewing angle to fully benefit from the capabilities of the flat screen. Depth of this mount is 7 centimetres.

Neomounts by Newstar FPMA-W120 is suitable for screens up to 40" (102 cm). The weight capacity of this product is 35 kg. The wall mount is suitable for screens that meet VESA hole pattern 100x100 and 200x200mm. Different hole patterns can be covered using Neomounts by Newstar VESA adapter plates.

Create a clean design ambiance for your flat screen TV in the living room, bedroom or home cinema.

All installation material is included with the product.

FPMA-W120 **NEOMOUNTS BY NEWSTAR TV WALL MOUNT**

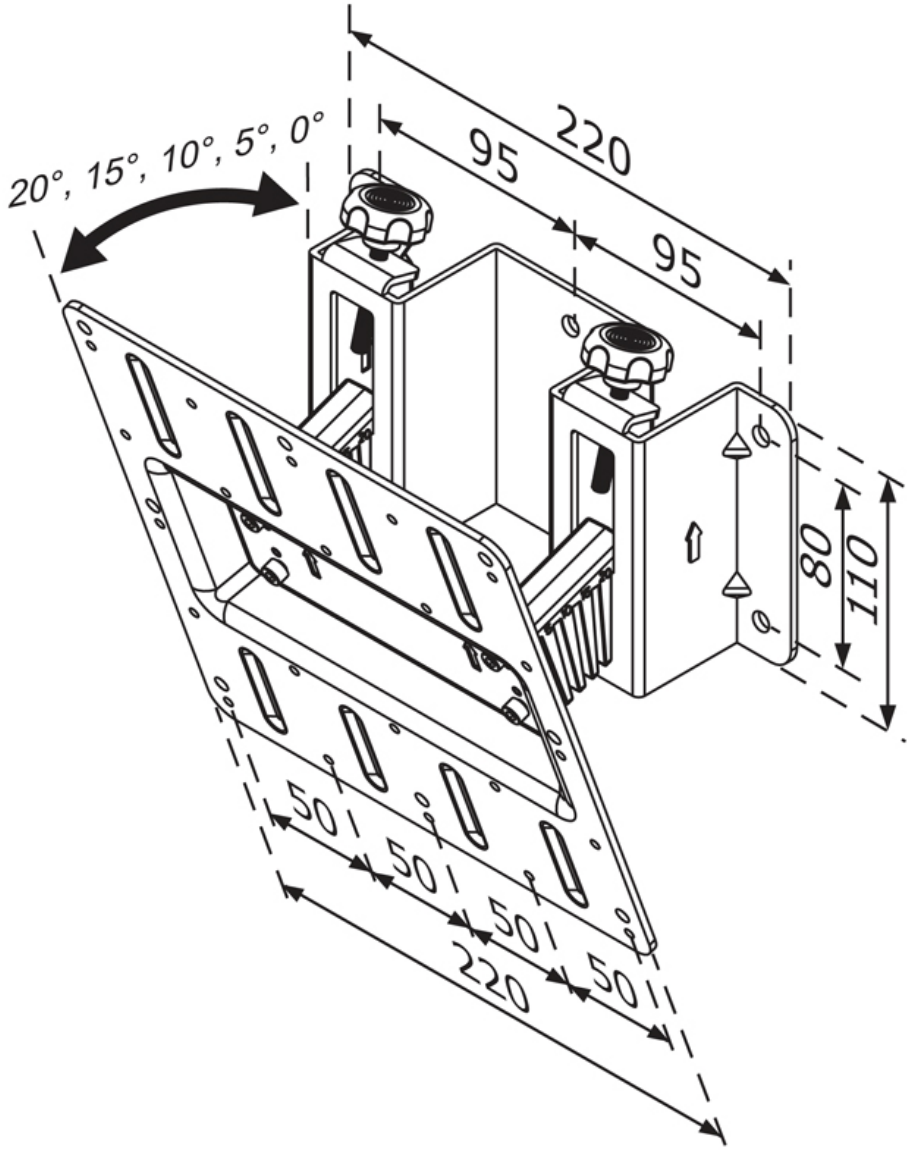

Newstar Computer Products Europa B.V. | Wateringweg 62 | 2031 EJ Haarlem | The Netherlands | +31(0)23-5478888 | info@neomounts.com
www.neomounts.com | Chamber of Commerce 37076185 | VAT NL805154383B01 | BIC RABONL2U | IBAN NL51RABO0375403299