View product on the web

LP3255TN-B

Screens 32"- 55"

LP3255TN-B

EAN-13: 8433281017900



About the product

Wall mount for 32"-55" screens, compatible with multiple VESA mounting patterns from 75x75 to 400x400 mm. Designed to provide comfortable and flexible viewing, it offers a tilt range of +10°/-15°, a swivel range of ±90° and ±3° levelling for precise screen adjustment. Its extendable arm provides an adjustable wall distance of 63 to 610 mm and supports up to 35 kg.



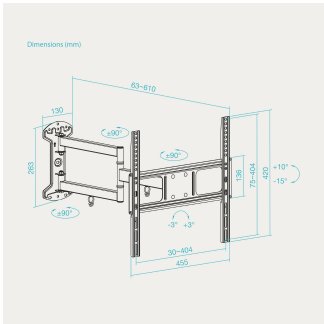

Technical Specifications

Angle of inclination	+10°/-15°
Angle of rotation	+90°/-90°
Material	High quality steel
Colour	Black
Packing dimensions	513x289x70 mm
Net weight	3,310 Kg
Gross weight	3,670 Kg
Inclined	Yes
Maximum distance to wall	610 mm
Minimum Wall Clearance	63 mm
Maximum weight supported	35 Kg
Maximum VESA compatibility	400x400
Minimum VESA compatibility	75x75
VESA mounting interface	75x75, 100x100, 100x150, 150x100, 100x200, 200x100, 150x150, 200x200, 200x300, 300x200, 200x400, 400x200, 300x300, 300x400, 400x300, 400x400
Number of supported screens	1
Minimum screen size	32
Maximum screen size	55
Cable management system	Yes
Leveling angle	+3°/-3°



Package contents

1 × Wall mount
1 × User manual
1 × Mounting kit (including tools, 5 Fischer wall plugs and screws)

TooQ Technology S.L. | Copyright © 2025. All rights reserved.

All specifications are subject to change without notice. Please check with your supplier for exact quotations. Products may not be available in all markets. Product color and software versions included are subject to change without notice. Brand and product names mentioned are trademarks or registered trademarks of their respective companies. Our audiovisual media are manufactured in iron unless otherwise specified on the product detail page.