View product on the web

JÖRMUN

Screens 55"- 86"

FSM04-B

EAN-13: 8433281017955



About the product

Wheeled floor stand for 55"-86" screens, with electric height and tilt adjustment up to +90°. Compatible with VESA mounts up to 900x600 and supporting up to 80 kg, it features an adjustable laptop tray and lockable wheels, making it ideal for educational environments, offices and meeting rooms.





Technical Specifications

Angle of inclination	+90°
Maximum tray weight	10 Kg
Material	High quality steel
Colour	Black
Packing dimensions	1065x800x248 mm
Remote control included	Yes
Net weight	37,90 Kg
Gross weight	45,70 Kg
Motorized system	Electric motor with height and tilt adjustment
Standards	RoHS and FCC
Height adjustment range	1000-1500 mm
Wheels	Distance between wheels: 1000 mm
Lockable wheels	Yes
Type of height adjustment	Electric
Maximum weight supported	80 Kg
Maximum VESA compatibility	900x600
Minimum VESA compatibility	300x100
VESA mounting interface	300x100, 300x200, 400x200, 300x300, 300x400, 400x300, 600x200, 500x300, 400x400, 600x300, 500x400, 400x600, 600x400, 700x400, 800x400, 700x500, 600x600, 800x500, 800x600, 900x600
Minimum screen size	55
Maximum screen size	86
Miscelaneos	Handles for convenient movement. Remote control with 2 programmable memory positions.
Inclinación horizontal	Yes

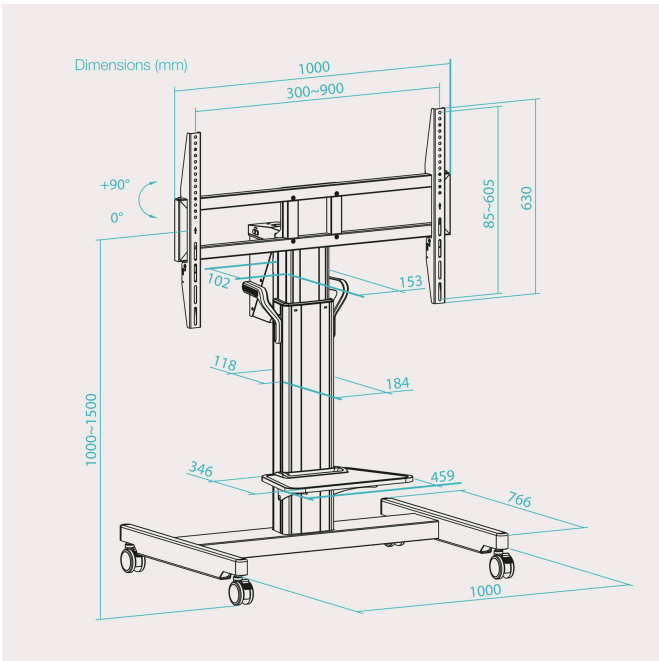

Package contents

1 × Stand
1 × Remote control
2 × AAA batteries for the remote control
1 × Mounting kit (including tools)
1 × Installation manual

TooQ Technology S.L. | Copyright © 2025. All rights reserved.

All specifications are subject to change without notice. Please check with your supplier for exact quotations. Products may not be available in all markets. Product color and software versions included are subject to change without notice. Brand and product names mentioned are trademarks or registered trademarks of their respective companies. Our audiovisual media are manufactured in iron unless otherwise specified on the product detail page.