Hardware Maintenance Manual

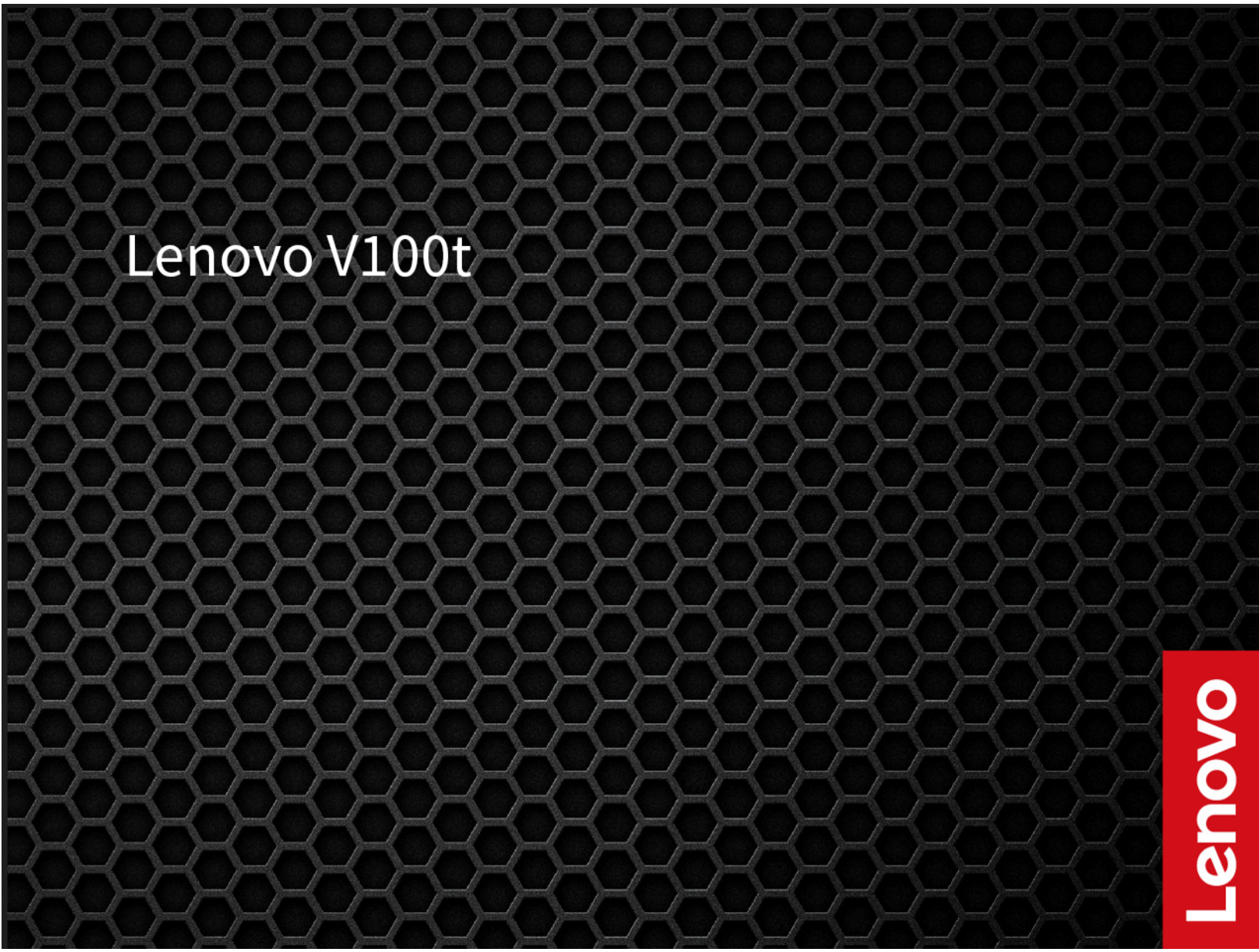

Lenovo V100t

First Edition (July 2026)

© Copyright Lenovo 2026.

LIMITED AND RESTRICTED RIGHTS NOTICE: If data or software is delivered pursuant to a General Services Administration “GSA” contract, use, reproduction, or disclosure is subject to restrictions set forth in Contract No. GS-35F-05925.

Contents

About this manual ii

Chapter 1. Product overview 1
Front 1
Rear 2

Chapter 2. Safety requirements for hardware maintenance 4
General safety requirements 4
Electrical safety requirements 5
Safety inspection guide 6
Handle devices that are sensitive to electrostatic discharge 7
Important danger warning in multiple languages . . . 8

Chapter 3. Diagnostics and troubleshooting 31
Overall procedure 31
Diagnostic tools 32
Hardware scan in Vantage 32
Lenovo UEFI diagnostic tool 32
Advanced diagnostic tools 33
Symptom-to-CRU/FRU index 34
POST error codes 34
Beep symptoms 35
Storage drive boot error 35
Power supply problems 35
Miscellaneous error conditions 36
Undetermined problems 38
Call Lenovo 38
Before contacting Lenovo support 39
Find the serial number 39
Lenovo Customer Support Center 40

Chapter 4. Hardware replacement . . 41
Before hardware replacement 41
Service tools 41
Screw list 44
CRU/FRU definition 44
Prerequisites for hardware replacement . . . 47
System board illustration 48
Handling thermal interface materials 49
External options 50
Rubber feet 50
Computer cover 50
PCI Express card latch 51
PCI Express card slot cover 52
Front bezel 52
Drive bay assembly 53
Removal steps 53
Installation steps 54
Coin-cell battery 55
Thermal sensor 56
2.5G LAN card or USB card 57
Hard disk drive 58
Front I/O bracket 59
Wi-Fi card and Wi-Fi card shield 59
Wi-Fi antennas and cables 60
Front Wi-Fi antenna and cable 60
Rear Wi-Fi antenna and cable 61
M.2 solid-state drive 62
M.2 2242 solid-state drive and clip 62
M.2 2280 solid-state drive 63
M.2 solid-state drive thermal pad 64
M.2 2242 solid-state drive thermal pad 64
M.2 2280 solid-state drive thermal pad 65
Memory module 65
Power supply assembly 66
Heat sink and fan assembly 67
CPU 68
System board 69
Rear I/O shield 72

Chapter 5. Supplemental instructions 74
UEFI BIOS 74
Enter the UEFI BIOS menu 74
Navigate the UEFI BIOS menu 74
UEFI BIOS passwords 75
Update the UEFI BIOS 75
BIOS recovery 77
Clear CMOS position 77
Clear CMOS 77
Recover from a BIOS update failure 77

Appendix A. Important notice for Quebec consumers 79

Appendix B. Self-help resource 80

Appendix C. Notices and trademarks 83

© Copyright Lenovo 2026

About this manual

This manual contains hardware maintenance instructions for the product listed in the following table.

Product name	Machine type (MT)
Lenovo V100t	13S8, 13S9, 13SA, 13SB

Important:

- Hardware or software configurations vary by machine type. Some statements or illustrations in this manual may differ slightly from your computer.
- It is recommended that the computer be repaired by trained service technicians.
- For customers electing to service the computer on their own, it is still recommended to contact Lenovo Customer Support Center for guidance. See “Call Lenovo” on page 38. Depending on the complexity of the repair, it may be recommended to have a Lenovo-authorized service provider repair the computer.
- Before servicing a computer, be sure to follow all instructions carefully and read all the information under Chapter 2 “Safety requirements for hardware maintenance” on page 4 and “Before hardware replacement” on page 41.

Chapter 1. Product overview

Front

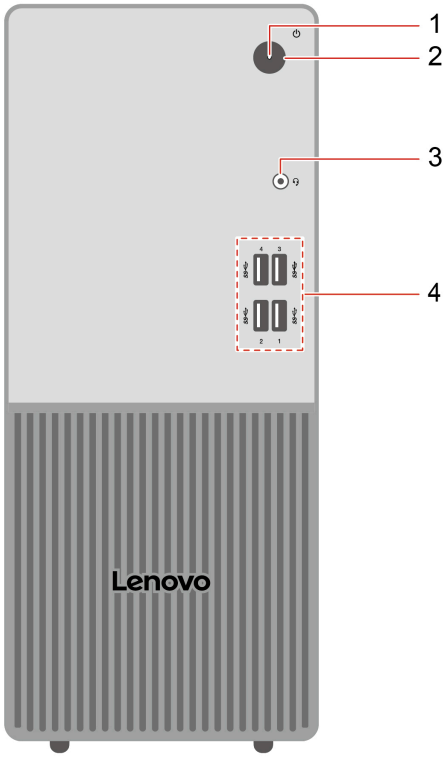

Item	Description	Item	Description
1	Power indicator	2	Power button
3	Headset connector	4	USB-A connectors (USB 5Gbps)

Statement on USB transfer rate

Depending on many factors such as the processing capability of the host and peripheral devices, file attributes, and other factors related to system configuration and operating environments, the actual transfer rate using the various USB connectors on this device will vary and will be slower than the data rate listed in the connector name or below for each corresponding device.

USB device	Data rate (Gbit/s)
Thunderbolt 3	40
Thunderbolt 4	40

Power indicator

Show the system status of your computer.

- **Blinking for three times:** The computer is initially connected to power.
- **On:** The computer is starting up or working.

© Copyright Lenovo 2026

- **Off:** The computer is off or in hibernation mode.
- **Blinking rapidly:** The computer is entering sleep or hibernation mode.
- **Blinking slowly:** The computer is in sleep mode.

Headset connector

The headset connector is compatible with:

- Headphones or earphones with a 3.5mm (0.14 inch), TRS (3-pole) plug
- Headsets with a 3.5mm (0.14 inch), CTIA-compliant or OMTP-compliant TRRS (4-pole) plug

Rear

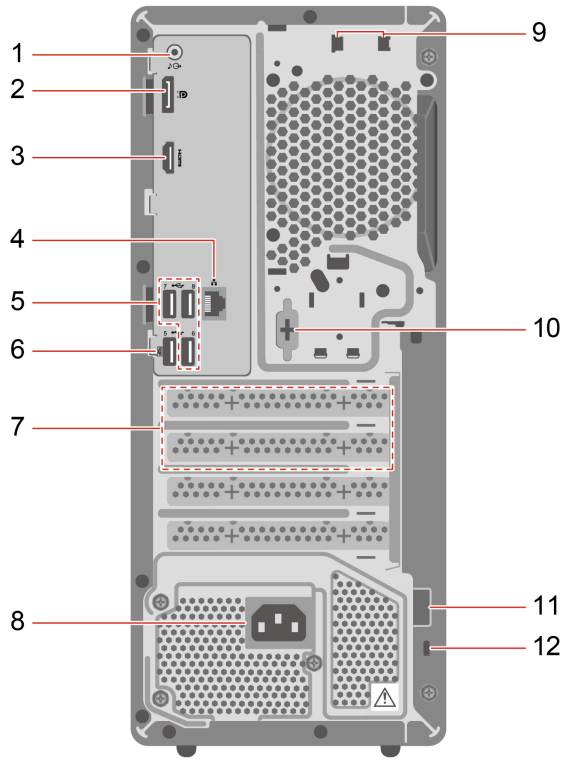

Item	Description	Item	Description
1	Audio line-out connector	2	DisplayPort™ out connector (4K/60Hz)
3	HDMI™ out connector (4K/60Hz)	4	Ethernet connector (1 Gbps)
5	USB-A connectors (Hi-Speed USB)	6	USB-A connector (Hi-Speed USB) with smart power-on feature
7	PCI-Express card area	8	Power cord connector
9	Smart cable clip slots	10	Serial connector*
11	Padlock loop	12	Security-lock slot

* for selected models

Note: The actual resolution of external displays may vary by the connected display device and the cable being used.

Serial connector

Connect an external modem, a serial printer, or other devices that use a serial connector.

Chapter 2. Safety requirements for hardware maintenance

General safety requirements

Meet the following requirements on environment, personnel and outfit, and operation to ensure general safety:

Environment requirements

Observe good housekeeping in the area of the machine during and after maintenance.

Personnel and outfit requirements

- Do not wear loose clothing that can be trapped in the moving parts of a machine. Ensure that your sleeves are fastened or rolled up above your elbows. If your hair is long, fasten it.
- Insert the ends of your necktie or scarf inside clothing or fasten it with a nonconductive clip, about 8 centimeters (3 inches) from the end.
- Do not wear jewelry, chains, metal-frame eyeglasses, or metal fasteners for your clothing, because metal objects are good electrical conductors.
- Wear safety glasses when you are hammering, drilling, soldering, cutting wire, attaching springs, using solvents, or working in any other conditions that might be hazardous to your eyes.

Operation requirements

- Before you start the machine, ensure that no one is in a hazardous position.
- Do not perform any action that causes personal injury or that makes the equipment unsafe.
- Keep your tool case away from walk areas so that other people will not trip over it.
- When lifting any heavy object:
  1. Ensure that you can stand safely without slipping.
  2. Distribute the weight of the object equally between your feet.
  3. Use a slow lifting force. Never move suddenly or twist when you attempt to lift.
  4. Lift by standing or by pushing up with your leg muscles; this action removes the strain from the muscles in your back. Do not attempt to lift any object that weighs more than 16 kg (35 lb) or that you think is too heavy for you.
- Place removed covers and other parts in a safe place, away from all personnel, while you are servicing the machine.
- After service, reinstall all safety shields, guards, labels, and ground wires. Replace any safety device that is worn or defective. Reinstall all covers correctly.

CAUTION:



Keep fingers and other parts of your body away from hazardous, moving parts. If you suffer an injury, seek medical care immediately. Never remove the cover on a power supply or any part that has the following label attached.



© Copyright Lenovo 2026

Hazardous voltage, current, and energy levels are present inside any component that has this label attached. There are no serviceable parts inside these components. If you suspect a problem with one of these parts, contact a service technician.

CAUTION:



Avoid contact with hot components inside the computer. During operation, some components become hot enough to burn the skin. Before you open the computer cover, turn off the computer, disconnect the power, and wait approximately 10 minutes for the components to cool.

Electrical safety requirements

To ensure electrical safety, meet the following requirements on environment, outfit, and operation when working on the computer:

Environment requirements

- Find the room emergency power-off (EPO) switch, disconnecting switch, or electrical outlet. If an electrical accident occurs, you can then operate the switch or unplug the power cord quickly.
- Do not work alone under hazardous conditions or near equipment that has hazardous voltages.
- Always look carefully for possible hazards in your work area. Examples of these hazards are moist floors, nongrounded power extension cables, power surges, and missing safety grounds.

Outfit requirements

- Do not use worn or broken tools and testers.
- Use only approved tools and test equipment. Some hand tools have handles covered with a soft material that does not insulate you when working with live electrical currents.
- Regularly inspect and maintain your electrical hand tools for safe operational condition.
- Many customers have, near their equipment, rubber floor mats that contain small conductive fibers to decrease electrostatic discharges (ESD). Do not use this type of mat to protect yourself from electrical shock.

Operation requirements



CAUTION:
Electrical current from power, telephone, and communication cables can be hazardous. To avoid personal injury or equipment damage, disconnect the attached power cords, telecommunication systems, networks, and modems before you open the computer covers, unless instructed otherwise in the installation and configuration procedures.

- Disconnect all power before:
  - Performing a mechanical inspection
  - Working near power supplies
  - Removing or installing Field Replaceable Units (FRUs) or Customer Replaceable Units (CRUs)
- Do not service the following parts with the power on when they are removed from their normal operating places in a machine:
  - Power supply units
  - Pumps
  - Blowers and fans

  - Motor generators

  This practice ensures the correct grounding of the units.
- Electrical grounding of the computer is required for operator safety and correct system function. Proper grounding of the electrical outlet can be verified by a certified electrician.
- Observe the special safety precautions when you work with very high voltages. Instructions for these precautions are in the safety sections of maintenance information. Use extreme care when measuring high voltages.
- Before you start to work on the machine, unplug the power cord. If you cannot unplug it, power off the wall box that supplies power to the machine and lock the wall box in the off position.
- Never assume that power has been disconnected from a circuit. First, check that it has been powered off.
- Avoid touching live electrical circuits with the reflective surface of a plastic dental mirror. The surface is conductive; such touching can cause personal injury and machine damage.
- If you need to work on a machine that has exposed electrical circuits, observe the following precautions:
  - Ensure that another person, familiar with the power-off controls, is nearby. That person must be there to switch off the power, if necessary.
  - Use only one hand when working with powered-on electrical equipment; keep the other hand in your pocket or behind your back.

    CAUTION:
    An electrical shock can occur only when there is a complete circuit. By observing the above rule, you may prevent a current from passing through your body.
  - When using testers, set the controls correctly and use the approved probe leads and accessories for that tester.
  - Stand on suitable rubber mats (obtained locally, if necessary) to insulate you from grounds such as metal floor strips and machine frames.
- If an electrical accident occurs:
  - Use caution; do not become a victim yourself.
  - Switch off power.
  - Send another person to get medical aid.

Safety inspection guide

The intent of this inspection guide is to assist you in identifying potentially unsafe conditions on these products. Each machine, as it was designed and built, had required safety items installed to protect users and service personnel from injury. This guide addresses only those items. However, good judgment should be used to identify potential safety hazards due to attachment of features or options not covered by this inspection guide.

If any unsafe conditions are present, you must determine how serious the apparent hazard could be and whether you can continue without first correcting the problem. Consider these conditions and the safety hazards they present:

- Electrical hazards, especially primary power (primary voltage on the frame can cause serious or fatal electrical shock)
- Explosive hazards, such as a damaged CRT face or a bulging capacitor
- Mechanical hazards, such as loose or missing hardware

To determine whether there are any potentially unsafe conditions, use the following checklist at the beginning of every service task. Begin the checks with the power off and the power cord disconnected:

- Before removing the cover:
  1. Check exterior covers for damage (loose, broken, or sharp edges).

2. Power off the computer. Disconnect the power cord. Check the power cord for:
   a. A third-wire ground connector in good condition. Use a meter to measure third-wire ground continuity for 0.1 ohm or less between the external ground pin and the frame ground.
   b. The power cord should be the authorized type specified for your computer.
   c. Insulation must not be frayed or worn.

- After removing the cover:
  1. Check for any obvious alterations. Use good judgment as to the safety of any alterations.
  2. Check inside the unit for any obvious unsafe conditions, such as metal filings, contamination, water or other liquids, or signs of fire or smoke damage.
  3. Check for worn, frayed, or pinched cables.
  4. Check that the power-supply cover fasteners (screws or rivets) have not been removed or tampered with.

Handle devices that are sensitive to electrostatic discharge

Any computer part containing transistors or integrated circuits (ICs) should be considered sensitive to electrostatic discharge (ESD). ESD damage can occur when there is a difference in charge between objects. Static electricity, although harmless to you, can seriously damage computer components and options. It is necessary to protect against ESD damage by equalizing the charge so that the machine, the part, the work mat, and the person handling the part are all at the same charge.

Notes:

1. Use product-specific ESD procedures when they exceed the requirements noted here.
2. Make sure that the ESD protective devices you use have been certified (ISO 9000) as fully effective.

When handling ESD-sensitive parts:

- Wear a grounded wrist strap against your skin to eliminate static on your body.
- Use the black side of a grounded work mat to provide a static-free work surface. The mat is especially useful when handling ESD-sensitive devices.
- Select a grounding system, such as those listed below, to provide protection that meets the specific service requirement.
  - Attach the ESD ground clip to any frame ground, ground braid, or green-wire ground.
  - Use an ESD common ground or reference point when working on a double-insulated or battery-operated system. You can use coax or connector-outside shells on these systems.
  - Use the round ground-prong of the ac plug on ac-operated computers.

  Note: The use of a grounding system is desirable but not required to protect against ESD damage.
- Avoid contact with other people while handling the part.
- Prevent others from touching the options and other computer components.
- Prevent the part from touching your clothing. Most clothing is insulative and retains a charge even when you are wearing a wrist strap.
- Limit your movement. Movement can cause static electricity to build up around you.
- Do not place the part on the computer cover or other metal surface.
- Always handle computer components and options carefully. Hold PCI/PCIe cards, memory modules, system boards, and CPUs only by the edges. Never touch any exposed circuitry.

- Touch the static-protective package containing the part to a metal expansion-slot cover or other unpainted metal surface on the computer for at least two seconds. This reduces static electricity from the package and your body before you install or replace a new part.
- Do not open the static-protective package containing the new part until the defective part has been removed and you are ready to install the new part. Static electricity, although harmless to you, can seriously damage computer components and options.
- Keep the parts in protective packages until they are inserted into the product.
- When possible, remove the new part from the static-protective package, and install it directly in the computer without setting the part down. When this is not possible, place the static-protective package on a smooth and level surface and place the part on the package.

Important danger warning in multiple languages

The safety notices in this section are provided in the following languages:

- English
- Arabic
- Brazilian/Portuguese
- Chinese (simplified)
- Chinese (traditional)
- French
- German
- Hebrew
- Italian
- Korean
- Spanish

English



DANGER

Electrical current from power, telephone and communication cables is hazardous.

To avoid a shock hazard:

- **Do not connect or disconnect any cables or perform installation, maintenance, or reconfiguration of this product during an electrical storm.**
- **Connect all power cords to a properly wired and grounded electrical outlet.**
- **Connect to properly wired outlets any equipment that will be attached to this product.**
- **When possible, use one hand only to connect or disconnect signal cables.**
- **Never turn on any equipment when there is evidence of fire, water, or structural damage.**
- **Disconnect the attached power cords, telecommunications systems, networks, and modems before you open the device covers, unless instructed otherwise in the installation and configuration procedures.**
- **Connect and disconnect cables as described in the following tables when installing, moving, or opening covers on this product or attached devices.**

To Connect	To Disconnect
1. Turn everything OFF. 2. First, attach all cables to devices. 3. Attach signal cables to connectors. 4. Attach power cords to outlet. 5. Turn device ON.	1. Turn everything OFF. 2. First, remove power cords from outlet. 3. Remove signal cables from connectors. 4. Remove all cables from devices.



CAUTION:
If your system has a module containing a lithium battery, replace it only with the same module type made by the same manufacturer. The battery contains lithium and can explode if not properly used, handled, or disposed of.*Do not:*

- **Throw or immerse into water**
- **Heat to more than 100°C (212°F)**
- **Repair or disassemble**

Dispose of the battery as required by local ordinances or regulations.



CAUTION:
When laser products (such as CD-ROMs, DVD-ROM drives, fiber optic devices, or transmitters) are installed, note the following:

- **Do not remove the covers. Removing the covers of the laser product could result in exposure to hazardous laser radiation. There are no serviceable parts inside the device.**
- **Use of controls or adjustments or performance of procedures other than those specified herein might result in hazardous radiation exposure.**



DANGER

Some laser products contain an embedded Class 3A or Class 3B laser diode. Note the following:

Laser radiation when open. Do not stare into the beam, do not view directly with optical instruments, and avoid direct exposure to the beam.



CAUTION:
Use safe practices when lifting.



≥18 kg (37 lb)



≥32 kg (70.5 lb)



≥55 kg (121.2 lb)



CAUTION:
The power control button on the device and the power switch on the power supply do not turn off the electrical current supplied to the device. The device also might have more than one power cord. To remove all electrical current from the device, ensure that all power cords are disconnected from the power source.

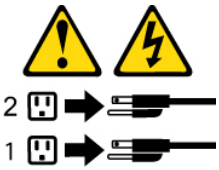

Arabic



خـــطر

التيـار الكـهربـي المـوجـود بمصـدر الطـاقـة أو أجـهزة التليفـون أو أسـلاك الإتـصالات يشـكل خـطورة.

لـتفادي مخـاطـر الصـدمـات الكـهربـائـية:

لا تحاول توصيل أو فصل أي أسـلاك أو القـيام بعـمليات تـركيب أو صـيانـة أوإعـادة توصـيف لـهذا المنتج أثـناء وجـود عاصـفة كـهربـائـية.

يجـب تـوصـيل كـل أسـلاك الكـهربـاء فـي مخـارج كـهربـاء ذات تـوصـيلات أسـلاك وتـوصـيلات أرضـية صحيـحة
يجـب تـوصـيل أي جـهاز سـيتم الحـاقه بـهذا المـنتج فـي مخارج كـهربـاء ذات تـوصـيلات أسـلاك صحيحة.

وإن أمـكن يـجب اسـتخدام يـد واحـدة فـقط فـي تـوصـيل أو فصـل أسلاك الإشـارة.

لا تحـاول تشغـيل أي جـهاز إذا كـان هنـاك أثـر لحـرق أو مـياه أو تـلف بالمكـونـات
يجـب فصـل أسـلاك الكـهربـاء وأنـظمة الاتصـالات وشـبكات الاتصـال وأجـهزة المـودم الملحـقة قـبل فـتح أغطية الجهاز، مـالـم يـتم طـلب خـلاف ذلك فـي التـعليـمات الخـاصة بالتـركيب والتـوصـيف.
قم بتوصيل وفصل الأسلاك كما هو موضح في الجدول التالي وذلك عند القيام بعمليات التركيب أو النقل أو فتح أغطية هذا المنتج أو الأجهزة الملحقة.

للتوصيل:	للفصل:
قم بإيقاف كل شيء.	قم بإيقاف كل شيء.
أولا، قم بتوصيل كل الأسلاك بالأجهزة.	أولا، قم بفصل كل أسلاك الكهرباء من المخرج.
قم بتوصيل أسلاك الإشارة في لموصلات.	قم بفصل أسلاك الإشارة من الموصلات.
قم بتوصيل أسلاك الكهرباء في المخارج.	قم بفصل كل الأسلاك من الأجهزة.
قم بتشغيل الجهاز.	



تنبيـــه :

اذا كان النظام الخاص يستخدم معه بطارية ليثيوم قم باستبدالها بنفس النوع الذي تم صناعته من خلال نفس المصنع. تحتوي البطارية على مادة الليثيوم ويمكن أن تنفجرفي حالة عدم استخدامها أو التعامل معها بطريقة صحيحة أو عند التخلص منها بطريقة خطأ.

لا تقم بـــ:

- **القاء البطارية أو غمرها في الماء**
- **تسخينها أعلى من ١٠٠ درجة مئوية°و(٢١٢ ° فهرنهيت)**
- **بتصليحها أو فكها**

تخلص من البطارية طبقا للقانون أو النظام المحلي .



تنبيـــه :
أثناء تركيب منتجات ليزر (مثل CD-ROMsأو وحدة تشغيل DVDأو أجهزة Fiber Optic أو وحدات الارسال) يجب مراعاة الآتي:

لا تنزع الأغطية. قد ينتج عن نزع أغطية منتج الليزر انفجار أشعة الليزر شديدة الخطورة.
لا يوجد أجزاء يمكن تغييرها داخل الجهاز. قد ينتج عن استخدام تحكمات أو تعديلات أو عمل أي تصرفات أخرى تخالف ما هو محددا هنا الى انفجار أشعة شديدة الخطورة.



خطـــر

تحتوى بعض منتجات الليزر على الفئة دايود ليزر مدمج من الفئة Class 3Aأو Class 3B. يجب مراعاة الآتي .

أشعة الليزر عند الفتح. لا تحدق الى الاشعاع و لا تنظر اليه مباشرة بواسطة أي أجهزة مرئية وتجنب التعرض المباشر للاشعاع .



تنبيه :
يجب استخدام ممارسات آمنة عند الرفع



≥18 kg (37 lb)



≥32 kg (70.5 lb)



≥55 kg (121.2 lb)



تنبيـــه :
لا يقم زر التحكم في التشغيل الموجود على الجهاز والمفتاح الكهربائي الموجود على لوحة التحكم بايقاف التيار الكهربائي المار بالجهاز. قد يكون للجهاز أكثر من سلك كهربائي واحد. لايقاف التيار الكهربائي المار بالجهاز، تأكد من فصل جميع أسلاك الكهرباء من مصدر الكهرباء .

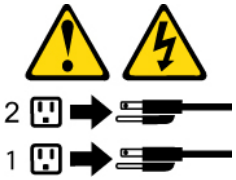

Brazilian Portuguese



PERIGO

A corrente elétrica proveniente de cabos de alimentação, de telefone e de comunicações é perigosa.

Para evitar risco de choque elétrico:

- Não conecte nem desconecte nenhum cabo ou execute instalação, manutenção ou reconfiguração deste produto durante uma tempestade com raios.
- Conecte todos os cabos de alimentação a tomadas elétricas corretamente instaladas e aterradas.
- Todo equipamento que for conectado a este produto deve ser conectado a tomadas corretamente instaladas.
- Quando possível, utilize apenas uma das mãos para conectar ou desconectar cabos de sinal.
- Nunca ligue nenhum equipamento quando houver evidência de fogo, água ou danos estruturais.
- Antes de abrir tampas de dispositivos, desconecte cabos de alimentação, sistemas de telecomunicação, redes e modems conectados, a menos que especificado de maneira diferente nos procedimentos de instalação e configuração.
- Conecte e desconecte os cabos conforme descrito na tabela apresentada a seguir ao instalar, mover ou abrir tampas deste produto ou de dispositivos conectados.

Para Conectar:	**Para Desconectar:**
1. DESLIGUE Tudo. 2. Primeiramente, conecte todos os cabos aos dispositivos. 3. Conecte os cabos de sinal aos conectores. 4. Conecte os cabos de alimentação às tomadas. 5. LIGUE os dispositivos.	1. DESLIGUE Tudo. 2. Primeiramente, remova os cabos de alimentação das tomadas. 3. Remova os cabos de sinal dos conectores. 4. Remova todos os cabos dos dispositivos.



CUIDADO:

Se o seu sistema possui um módulo com uma bateria de lítio, substitua-o apenas por um módulo do mesmo tipo e do mesmo fabricante. A bateria contém lítio e pode explodir se não for utilizada, manuseada ou descartada de maneira correta.

Não:

- Jogue ou coloque na água
- Aqueça a mais de 100°C (212°F)
- Conserte nem desmonte

Descarte a bateria conforme requerido pelas leis ou regulamentos locais.

PRECAUCIÓN:

Quando produtos a laser (como unidades de CD-ROMs, unidades de DVD-ROM, dispositivos de fibra ótica ou transmissores) estiverem instalados, observe o seguinte:

- Não remova as tampas. A remoção das tampas de um produto a laser pode resultar em exposição prejudicial à radiação de laser. Não existem peças que podem ser consertadas no interior do dispositivo.
- A utilização de controles ou ajustes ou a execução de procedimentos diferentes dos especificados aqui pode resultar em exposição prejudicial à radiação.

PERIGO

Alguns produtos a laser contêm diodo de laser integrado da Classe 3A ou da Classe 3B. Observe o seguinte:

Radiação a laser quando aberto. Não olhe diretamente para o feixe a olho nu ou com instrumentos ópticos e evite exposição direta ao feixe.

CUIDADO:

Utilize procedimentos de segurança para levantar equipamentos.



≥18 kg (37 lb)



≥32 kg (70.5 lb)



≥55 kg (121.2 lb)

CUIDADO:

O botão de controle de alimentação do dispositivo e o botão para ligar/desligar da fonte de alimentação não desligam a corrente elétrica fornecida ao dispositivo. O dispositivo também pode ter mais de um cabo de alimentação. Para remover toda a corrente elétrica do dispositivo, assegure que todos os cabos de alimentação estejam desconectados da fonte de alimentação.

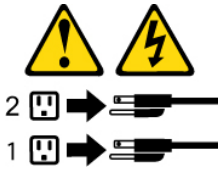

Chinese (simplified)



危险

电源、电话和通信电缆中的电流是危险的。

为避免电击危险：

- 请勿在雷电期间连接或断开任何电缆的连接，
  或者对本产品进行安装、维护或重新配置。
- 将所有电源线连接到正确连线和妥善接地的电源插座。
- 将所有要连接到该产品的设备连接到正确连线的插座。
- 如果可能，请仅使用一只手来连接或断开信号电缆的连接。
- 切勿在有火、水、结构损坏迹象的情况下开启任何设备。
- 在打开设备外盖之前请断开已连接的电源线、远程通信系统、
  网络和调制解调器，除非在安装和配置过程中另有说明。
- 当安装、移动或打开该产品或连接设备的外盖时，
  请按照下表所述来连接或断开电缆的连接。

要连接	要断开连接
1. 切断所有电源。 2. 首先将所有电缆连接到设备。 3. 将信号电缆连接到接口。 4. 将电源线连接到插座。 5. 开启设备。	1. 切断所有电源。 2. 首先从插座上拔出电源线。 3. 从接口上拔出信号电缆。 4. 从设备上拔出所有电缆。



警告：
如果您的系统有包含锂电池的模块,请仅使用同一制造商生产的相同模块类型来替换该模块。
该电池中含有锂，如果使用、操作或处理不当，可能会发生爆炸。

切勿：

- 投入或浸入水中
- 加热到 100°C（212°F）以上
- 维修或拆卸

请按照当地法令或条例的要求处理电池。



警告：
安装激光产品（例如 CD-ROM、DVD-ROM 驱动器、光纤设备或发射设备）时，
请注意以下声明：

- 请勿卸下外盖。卸下激光产品的外盖可能导致遭受激光辐射的危险。该设
  备内没有可维修的部件。
- 如果不按照此处指定的过程进行控制、调整或操作，则有可能导致遭受辐
  射的危险。



危险

某些激光产品包含嵌入式 3A 类或 3B 类激光二极管。请注意以下声明：

打开后有激光辐射。请勿注视光束，请勿直接用光学仪器查看，并请避免直接暴露在光束中。



警告：
抬起时请采取安全措施。



≥18 千克（37 磅） ≥32 千克（70.5 磅） ≥55 千克（121.2 磅）



警告：
设备上的电源控制按钮和电源上的电源开关不会切断供给该设备的电流。该设备还可能有多条电源线。要切断该设备的所有电流，请确保所有电源线都与电源断开连接。

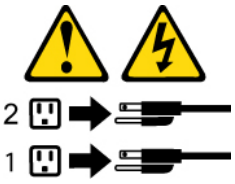

Chinese (traditional)



危險

電源、電話及通訊纜線上的電流都具有危險性。
若要避免觸電危險：
- 請勿在雷雨期間，連接或拔除纜線、執行安裝、維護或重新配置本產品。
- 將所有電源線連接到正確配線及接地的電源插座。
- 任何與本產品連接的設備都必須連接到配線妥當的電源插座。
- 請盡可能用單手連接或拔除信號線。
- 發生火災、水災或結構損害時，絕對不要開啟任何設備。
- 除非在安裝及配置程序中另有指示，否則在開啟裝置機蓋之前，請拔掉連接的電源線、電信系統、網路及數據機。
- 安裝、移動或開啟本產品或附屬裝置的機蓋時，請遵循下列說明連接及拔掉纜線。

連線	切斷連線
1. 關閉所有開關。	1. 關閉所有開關。
2. 首先，連接所有接線到裝置。	2. 首先，拔掉插座上的電源線。
3. 連接信號線到接頭。	3. 拔掉接頭上的信號線。
4. 連接電源線到插座。	4. 拔掉裝置上所有接線。
5. 開啟裝置。	



警告：
如果您的系統中含有鋰電池模組，請僅使用同一家製造商所生產的相同模組進行更換。
如果未以正確方式使用、處理或棄置含鋰的電池，會有爆炸的危險。
請勿：

- 沾溼或浸入水中
- 置於 100°C (212°F) 以上的高溫環境
- 修理或拆開

請按照各地區有關廢棄電池的法令和規定處理舊電池。



警告：
- 請勿移除機蓋。移除雷射產品的機蓋，可能會導致暴露在危險的雷射輻射中。裝置內部並無可自行維修的零件。
- 利用或執行非本文中所指定的控制、調整及執行程序，可能會導致危險的輻射外洩。



危險

部分雷射產品含有內嵌式 **Class 3A** 或 **Class 3B** 雷射二極體。請注意下列事項：
在開啟光碟機時，會發生雷射輻射。請勿直視光束或用光學儀器直接檢視，並避免直接暴露在光束中。



警告：
搬運時請注意安全。



≥ 18 公斤（37 磅） ≥ 32 公斤（70.5 磅） ≥ 55 公斤（121.2 磅）



警告：
裝置上的電源控制按鈕及電源供應器上的電源開關，無法關閉裝置所產生的電流。
該裝置可能有多條電源線。若要除去裝置流出的所有電流，請確認已切斷所有電源線的電源。

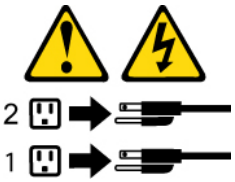

French



DANGER

Le courant électrique provenant de l'alimentation, du téléphone et des câbles de transmission peut présenter un danger.

Pour éviter tout risque de choc électrique :

- Ne manipulez aucun câble et n'effectuez aucune opération d'installation, d'entretien ou de reconfiguration de ce produit au cours d'un orage.
- Branchez tous les cordons d'alimentation sur un socle de prise de courant correctement câblé et mis à la terre.
- Branchez sur des socles de prise de courant correctement câblés tout équipement connecté à ce produit.
- Lorsque cela est possible, n'utilisez qu'une seule main pour connecter ou déconnecter les câbles d'interface.
- Ne mettez jamais un équipement sous tension en cas d'incendie ou d'inondation, ou en présence de dommages matériels.
- Avant de retirer les carters de l'unité, mettez celle-ci hors tension et déconnectez ses cordons d'alimentation, ainsi que les câbles qui la relient aux réseaux, aux systèmes de télécommunication et aux modems (sauf instruction contraire mentionnée dans les procédures d'installation et de configuration).
- Lorsque vous installez, que vous déplacez, ou que vous manipulez le présent produit ou des périphériques qui lui sont raccordés, reportez-vous aux instructions ci-dessous pour connecter et déconnecter les différents cordons.

Connexion	Déconnexion
1. Mettez les unités HORS TENSION. 2. Commencez par brancher tous les cordons sur les unités. 3. Branchez les câbles d'interface sur des connecteurs. 4. Branchez les cordons d'alimentation sur des prises. 5. Mettez les unités SOUS TENSION.	1. Mettez les unités HORS TENSION. 2. Débranchez les cordons d'alimentation des prises. 3. Débranchez les câbles d'interface des connecteurs. 4. Débranchez tous les câbles des unités.



ATTENTION:

Si votre système est doté d'un module contenant une pile au lithium, vous devez le remplacer uniquement par un module identique, produit par le même fabricant. La pile contient du lithium et peut exploser en cas de mauvaise utilisation, de mauvaise manipulation ou de mise au rebut inappropriée.

Ne pas :

- **la jeter à l'eau,**
- **l'exposer à des températures supérieures à 100°C,**
- **chercher à la réparer ou à la démonter.**

Ne pas mettre la pile à la poubelle. Pour la mise au rebut, se reporter à la réglementation en vigueur.



ATTENTION:

Si des produits à laser (tels que des unités de CD-ROM, de DVD-ROM, des unités à fibres optiques, ou des émetteurs) sont installés, prenez connaissance des informations suivantes :

- **Ne retirez pas le carter. En ouvrant l'unité de CD-ROM ou de DVD-ROM, vous vous exposez au rayonnement dangereux du laser. Aucune pièce de l'unité n'est réparable.**
- **Pour éviter tout risque d'exposition au rayon laser, respectez les consignes de réglage et d'utilisation des commandes, ainsi que les procédures décrites dans le présent manuel.**



DANGER

Certains produits à laser contiennent une diode à laser intégrée de classe 3A ou 3B. Prenez connaissance des informations suivantes:

Rayonnement laser lorsque le carter est ouvert. Evitez toute expositiondirecte au rayon laser. Evitez de regarder fixement le faisceau ou del'observer à l'aide d'instruments optiques.



ATTENTION:

Soulevez la machine avec précaution.



≥18 kg (37 lb) ≥32 kg (70.5 lb) ≥55 kg (121.2 lb)



ATTENTION:

L'interrupteur de contrôle d'alimentation de l'unité et l'interrupteur dubloc d'alimentation ne coupent pas le courant électrique alimentantl'unité. En outre, le système peut être équipé de plusieurs cordonsd'alimentation. Pour mettre l'unité hors tension, vous devez déconnectertous les cordons de la source d'alimentation.

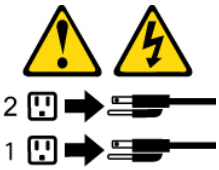

German



VORSICHT

An Netz-, Telefon- und Datenleitungen können gefährliche Spannungen anliegen.

Aus Sicherheitsgründen:

- **Bei Gewitter an diesem Gerät keine Kabel anschließen oder lösen. Ferner keine Installations-, Wartungs- oder Rekonfigurationsarbeiten durchführen.**
- **Gerät nur an eine Schutzkontaktsteckdose mit ordnungsgemäß geerdetem Schutzkontakt anschließen.**
- **Alle angeschlossenen Geräte ebenfalls an Schutzkontaktsteckdosen mit ordnungsgemäß geerdetem Schutzkontakt anschließen.**

- **Die Signalkabel nach Möglichkeit einhändig anschließen oder lösen, um einen Stromschlag durch Berühren von Oberflächen mit unterschiedlichem elektrischem Potenzial zu vermeiden.**
- **Geräte niemals einschalten, wenn Hinweise auf Feuer, Wasser oder Gebäudeschäden vorliegen.**
- **Die Verbindung zu den angeschlossenen Netzkabeln, Telekommunikationssystemen, Netzwerken und Modems ist vor dem Öffnen des Gehäuses zu unterbrechen, sofern in den Installations- und Konfigurationsprozeduren keine anders lautenden Anweisungen enthalten sind.**
- **Zum Installieren, Transportieren und Öffnen der Abdeckungen des Computers oder der angeschlossenen Einheiten die Kabel gemäß der folgenden Tabelle anschließen und abziehen.**

Zum Anschließen der Kabel gehen Sie wie folgt vor	Zum Abziehen der Kabel gehen Sie wie folgt vor
1. Schalten Sie alle Einheiten AUS. 2. Schließen Sie erst alle Kabel an die Einheiten an. 3. Schließen Sie die Signalkabel an die Buchsen an. 4. Schließen Sie die Netzkabel an die Steckdose an. 5. Schalten Sie die Einheit EIN.	1. Schalten Sie alle Einheiten AUS. 2. Ziehen Sie zuerst alle Netzkabel aus den Netzsteckdosen. 3. Ziehen Sie die Signalkabel aus den Buchsen. 4. Ziehen Sie alle Kabel von den Einheiten ab.



ACHTUNG:

Enthält das System ein Modul mit einer Lithiumbatterie, dieses nur durch ein Modul desselben Typs und von demselben Hersteller ersetzen. Die Batterie enthält Lithium und kann bei unsachgemäßer Verwendung, Handhabung oder Entsorgung explodieren.

Die Batterie nicht:

- mit Wasser in Berührung bringen.
- über 100 C erhitzen.
- reparieren oder zerlegen.

Die örtlichen Bestimmungen für die Entsorgung von Sondermüll beachten.



ACHTUNG:

Bei der Installation von Lasergeräten (wie CD-ROM-Laufwerken, DVD- aufwerken, Einheiten mit Lichtwellenleitertechnik oder Sendern) Folgendes beachten:

- **Die Abdeckungen nicht entfernen. Durch Entfernen der Abdeckungen des Lasergeräts können gefährliche Laserstrahlungen freigesetzt werden. Das Gerät enthält keine zu wartenden Teile.**
- **Werden Steuerelemente, Einstellungen oder Durchführungen von Prozeduren anders als hier angegeben verwendet, kann gefährliche Laserstrahlung auftreten.**



VORSICHT

Einige Lasergeräte enthalten eine Laserdiode der Klasse 3A oder 3B. Beachten Sie Folgendes:

Laserstrahlung bei geöffneter Verkleidung. Nicht in den Strahl blicken. Keine Lupen oder Spiegel verwenden. Strahlungsbereich meiden.



ACHTUNG:

Arbeitsschutzrichtlinien beim Anheben der Maschine beachten.



≥18 kg ≥32 kg ≥55 kg



ACHTUNG:

Mit dem Netzschalter an der Einheit und am Netzteil wird die Stromversorgung für die Einheit nicht unterbrochen. Die Einheit kann auch mit mehreren Netzkabeln ausgestattet sein. Um die Stromversorgung für die Einheit vollständig zu unterbrechen, müssen alle zum Gerät führenden Netzkabel vom Netz getrennt werden.

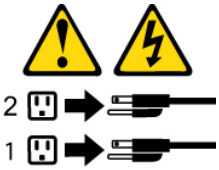

Hebrew



סכנה

זרם חשמלי המועבר בכבלי חשמל, טלפון ותקשורת הוא מסוכן.

כדי להימנע מסכנת התחשמלות:

- אל תחברו או תנתקו כבלים, ואל תבצעו פעולת התקנה, תחזוקה או שינוי תצורה במוצר זה במהלך סופת ברקים.
- חברו את כל כבלי החשמל לשקע חשמל מחווט ומוארק כהלכה.
- חברו כל ציוד שיחובר למוצר זה לשקעי חשמל מחווטים כהלכה.
- במידת האפשר, השתמשו ביד אחת בלבד לחיבור או לניתוק של כבלי אותות.
- לעולם אל תפעילו ציוד כלשהו כאשר יש עדות לנזק מבני או לנזק כתוצאה מאש או ממים.
- נתקו את כבלי החשמל, מערכות התקשורת, התקני הרשת והמודמים המחוברים לפני פתיחת כיסויי ההתקן, אלא אם הליכי ההתקנה וקביעת התצורה מורים אחרת.
- בעת התקנה, העברה או פתיחת כיסויים במוצר זה או בהתקנים המחוברים, חברו ונתקו את הכבלים כמתואר בטבלה שלהלן.

כדי לחבר	כדי לנתק
1. כבו הכל. 2. ראשית, חברו את כל הכבלים להתקנים. 3. חברו את כבלי האותות למחברים. 4. חברו את כבלי החשמל לשקעים. 5. הפעילו את ההתקן.	1. כבו הכל. 2. ראשית, נתקו את כבלי החשמל מהשקעים. 3. נתקו את כבלי האותות מהמחברים. 4. הסירו את כל הכבלים מההתקנים.



זהירות:
אם המערכת כוללת מודול המכיל סוללת ליתיום, החליפו אותו רק במודול מאותו סוג ומתוצרת אותו יצרן. הסוללה מכילה ליתיום, ועלולה להתפוצץ אם לא משתמשים ומטפלים בה או משליכים אותה כיאות.

לעולם:

- אל תטבלו במים
- אל תחממו לטמפרטורה הגבוהה מ-100°C (212°F)
- אל תתקנו או תפרקו

השליכו את הסוללה כנדרש לפי התקנות והחוקים המקומיים.



זהירות:
בעת התקנת מוצרי לייזר (כגון כונני תקליטורים ו-DVD, התקני סיב אופטי או משדרים), שימו לב לאזהרות הבאות:

- אל תסירו את הכיסויים. הסרת הכיסויים של מוצר הלייזר עלולה לגרום לחשיפה לקרינת לייזר מסוכנת. אין חלקים ברי טיפול בתוך ההתקן.
- שינויים, שימוש בבקרות או ביצוע הליכים אחרים מאלה המתוארים כאן, עלולים לגרום לחשיפה לקרינה מסוכנת.



סכנה

מוצרי לייזר מסוימים מכילים דיודת לייזר מסוג Class 3A או Class 3B. שימו לב לאזהרה הבאה:

כאשר הוא פתוח, המוצר פולט קרינת לייזר. אל תביטו ישירות בקרן, אל תביטו ישירות בעזרת ציוד אופטי, והימענו מחשיפה לקרן.



זהירות:
השתמשו בהליכים
הנאותים בעת
הרמת הציוד.



≥ 18 ק"ג (37 ליב')



≥ 32 ק"ג (70.5 ליב')



≥ 55 ק"ג (121.2 ליב')



זהירות:
לחצן ההפעלה של ההתקן ומתג ההפעלה של ספק החשמל אינם מפסיקים את זרם החשמל המסופק להתקן. בנוסף, ההתקן עשוי לכלול יותר מכבל חשמל אחד. כדי לסלק את כל הזרם החשמלי מההתקן, ודאו שכל כבלי החשמל מנותקים ממקור החשמל.

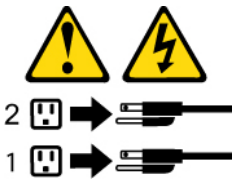

Italian



PERICOLO

La corrente elettrica proveniente dai cavi di alimentazione, del telefono e di comunicazione può essere pericolosa.

Per evitare il rischio di scosse elettriche:

- **Non collegare o scollegare qualsiasi cavo oppure effettuare l'installazione, la manutenzione o la riconfigurazione del prodotto durante un temporale.**
- **Collegare tutti i fili elettrici a una presa di alimentazione correttamente cablata e dotata di messa a terra.**
- **Collegare alle prese elettriche appropriate tutte le apparecchiature che verranno utilizzate per questo prodotto.**
- **Se possibile, utilizzare solo una mano per collegare o scollegare i cavi di segnale.**
- **Non accendere assolutamente apparecchiature in presenza di incendi, perdite d'acqua o danno strutturale.**
- **Scollegare i cavi di alimentazione, i sistemi di telecomunicazione, le reti e il modem prima di aprire i coperchi del dispositivo, salvo istruzioni contrarie relative alle procedure di installazione e configurazione.**
- **Collegare e scollegare i cavi come descritto nella seguente tabella quando vengono effettuate operazioni di installazione, spostamento o apertura dei coperchi di questo prodotto o delle unità collegate.**

Per collegarsi	Per scollegarsi
1. SPEGNERE le apparecchiature. 2. Innanzitutto, collegare tutti i cavi alle unità. 3. Collegare i cavi di segnale ai connettori. 4. Collegare i cavi di alimentazione alla presa. 5. Accendere l'unità.	1. SPEGNERE le apparecchiature. 2. Innanzitutto, rimuovere i cavi di alimentazione dalla presa. 3. Rimuovere i cavi di segnale dai connettori. 4. Rimuovere tutti i cavi dalle unità.



ATTENZIONE:

Se sul sistema è presente un modulo che contiene una batteria al litio, sostituirlo solo con un tipo di modulo dello stesso tipo della stessa casa di produzione. La batteria contiene litio e può esplodere se usata, maneggiata o smaltita in modo non corretto.

Non:

- **Gettare o immergere la batteria nell'acqua**
- **Riscaldarla ad una temperatura superiore ai 100 gradi C (212 gradi F)**
- **Smontarla, ricaricarla o tentare di ripararla**

Le batterie usate vanno smaltite in accordo alla normativa in vigore (DPR 915/82 e successive disposizioni e disposizioni locali).



ATTENZIONE:

Quando vengono installati prodotti laser (quali CD-ROM, unità DVD-ROM, unità a fibre ottiche o trasmittenti), tener presente quanto segue:

- **Non rimuovere gli sportelli. L'apertura di un'unità laser può determinare l'esposizione a radiazioni laser pericolose. All'interno dell'unità non vi sono parti su cui effettuare l'assistenza tecnica.**
- **L'utilizzo di controlli, regolazioni o l'esecuzione di procedure non descritti nel presente manuale possono provocare l'esposizione a radiazioni pericolose.**



PERICOLO

Alcune unità laser contengono un diodo laser di Classe 3A o Classe 3B. Tener presente quanto segue:

Aprendo l'unità vengono emesse radiazioni laser. Non fissare il fascio, non guardarlo direttamente con strumenti ottici ed evitare l'esposizione al fascio.



ATTENZIONE:

Prestare attenzione nel sollevare l'apparecchiatura.



≥18 kg ≥32 kg ≥55 kg



ATTENZIONE:

Il pulsante di controllo dell'alimentazione presente sull'unità e l'interruttore dell'alimentatore non disattivano l'alimentazione corrente fornita all'unità. E' possibile che l'unità disponga di più cavi di alimentazione. Per disattivare l'alimentazione dall'unità, accertarsi che tutti i cavi di alimentazione siano scollegati dalla fonte di alimentazione.

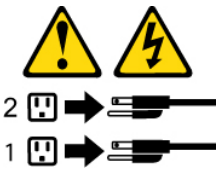

Korean



위험

전원, 전화, 통신 케이블의 전류는 위험합니다.

감전의 위험을 피하려면 다음과 같이 하십시오.

- 번개가 치는 날에는 케이블을 연결 또는 분리하거나 본 제품을 설치, 보수, 재구성하지 마십시오.

- 모든 전원 코드는 올바르게 접지된 전기 콘센트에 연결하십시오.

- 본 제품에 연결될 장치는 올바르게 배선된 콘센트에 연결하십시오.

- 신호 케이블을 연결 또는 분리할 때 가능하면 한 손만을 사용하십시오.

- 불 또는 물로 인한 손상이나 구조적인 손상이 있을 경우 장치의 전원을 절대 켜지 마십시오.

- 설치 및 구성 과정에 별도의 지시 사항이 없는 경우, 장치의 덮개를 열기 전에 연결된 전원 코드, 원격 통신 시스템, 네트워크, 모뎀을 분리하십시오.

- 본 제품이나 연결된 장치를 설치, 이동하거나 덮개를 열 때 다음 표와 같은 순서로 케이블을 연결하거나 분리하십시오.

연결할 때:	분리할 때:
1. 모든 장치의 전원을 끄십시오. 2. 먼저 모든 케이블을 장치에 연결하십시오. 3. 커넥터에 신호 케이블을 연결하십시오. 4. 콘센트에 전원 코드를 연결하십시오. 5. 장치의 전원을 켜십시오.	1. 모든 장치의 전원을 끄십시오. 2. 먼저 콘센트에서 전원 코드를 분리하십시오. 3. 커넥터에서 신호 케이블을 분리하십시오. 4. 장치에서 모든 케이블을 분리하십시오.



주의:
사용자의 시스템이 리튬 배터리를 포함하는 모듈일 경우, 동일한 제조업체에서 동일한 모듈 유형으로 생산된 제품으로 교체하십시오. 배터리에는 리튬이 함유되어 있어 잘못 사용, 취급 또는 폐기할 경우 폭발의 위험이 있습니다.

사고를 방지하려면 다음 사항을 준수하십시오.

- 배터리를 물 속에 던지거나 침수시키지 마십시오.

- 100℃(212°F) 이상 가열하지 마십시오.

- 수리하거나 분해하지 마십시오.

배터리를 폐기할 때는 법령 또는 회사의 안전 수칙에 따라 폐기하십시오.



주의:
CD-ROM, DVD-ROM 장치, 광섬유 장치 또는 송신 장치와 같은 레이저 제품을 설치할 때, 다음과 같은 취급 주의사항을 참고하십시오.

- 덮개를 열지 마십시오. 덮개를 열면 레이저 복사 에너지에 노출될 위험이 있습니다. 장치 내부에는 사용자가 조정하거나 수리할 수 있는 부품이 없습니다.

- 규정된 것 이외의 절차 수행, 제어 조정 등의 행위로 인해 해로운 레이저 복사에 노출될 수 있습니다.



위험

일부 장비에는 임베디드 클래스 3A 또는 클래스 3B 레이저 다이오드가 있습니다. 다음 주의사항에 유의하십시오.

드라이브가 열리면 레이저 복사 에너지가 방출됩니다. 광선이 눈에 직접 쏘이지 않도록 하십시오. 나안 또는 광학 기구를 착용한 상태에서 광선을 직접 바라보지 않도록 하십시오.



주의:
제품을 들어 올릴 때
안전 규제를 따르십시오.





주의:
장치의 전원 제어 버튼 및 전원 공급 장치의 전원 스위치를 사용하여 장치에 공급되는 전기를 차단하지 마십시오. 장치는 둘 이상의 코드를 가지고 있을 수 있습니다. 장치에서 모든 전원을 차단하려면 콘센트에서 코드가 모두 분리되어 있는지 확인하십시오.

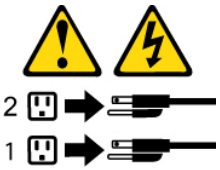

Spanish



PELIGRO

La corriente eléctrica procedente de cables de alimentación, teléfonos y cables de comunicación puede ser peligrosa.

Para evitar el riesgo de descarga eléctrica:

- **No conecte ni desconecte los cables ni realice ninguna tarea de instalación, mantenimiento o reconfiguración de este producto durante una tormenta eléctrica.**
- **Conecte todos los cables de alimentación a tomas de corriente debidamente cableadas y conectadas a tierra.**

- **Cualquier equipo que se conecte a este producto también debe conectarse a tomas de corriente debidamente cableadas.**
- **Siempre que sea posible, utilice una sola mano para conectar o desconectar los cables de señal.**
- **No encienda nunca un equipo cuando hay señales de fuego, agua o daños estructurales.**
- **Desconecte los cables de alimentación, los sistemas de telecomunicaciones, las redes y los módems conectados antes de abrir las cubiertas de los dispositivos, a menos que se indique lo contrario en los procedimientos de instalación y configuración.**
- **Conecte y desconecte los cables, como se describe en la tabla siguiente, cuando instale, mueva o abra las cubiertas de este producto o de los dispositivos conectados.**

Para conectar	Para desconectar
1. APÁGUELO todo. 2. En primer lugar, conecte todos los cables a los dispositivos. 3. Conecte los cables de señal a los conectores. 4. Enchufe los cables de alimentación a las tomas de corriente. 5. Encienda el dispositivo.	1. APÁGUELO todo. 2. En primer lugar, desenchufe los cables de alimentación de las tomas de corriente. 3. Desconecte los cables de señal de los conectores. 4. Desconecte todos los cables de los dispositivos.



PRECAUCIÓN:

Si su sistema dispone de un módulo que contiene una batería de litio, reemplácelo sólo con el mismo tipo de módulo, del mismo fabricante. La batería contiene litio y puede explotar si no se utiliza, manipula o desecha correctamente.

No debe:

- **Arrojarla al agua o sumergirla en ella**
- **Exponerla a temperaturas superiores a 100°C (212°F)**
- **Repararla o desmontarla**

Deshágase de la batería según especifiquen las leyes o normas locales.



PRECAUCIÓN:

Cuando haya productos láser (como unidades de CD-ROM, unidades de DVD, dispositivos de fibra óptica o transmisores) instalados, tenga en cuenta lo siguiente:

- **No quite las cubiertas. Si quita las cubiertas del producto láser, podría quedar expuesto a radiación láser peligrosa. Dentro del dispositivo no existe ninguna pieza que requiera servicio técnico.**
- **Si usa controles o ajustes o realiza procedimientos que no sean los especificados aquí, podría exponerse a radiaciones peligrosas.**

PELIGRO

Algunos productos láser tienen incorporado un diodo láser de clase 3A o clase 3B. Tenga en cuenta lo siguiente:

Cuando se abre, queda expuesto a radiación láser. No mire directamente al rayo láser, ni siquiera con instrumentos ópticos, y evite exponerse directamente al rayo láser.

PRECAUCIÓN:

Adopte procedimientos seguros al levantar el equipo.



≥18 kg ≥32 kg ≥55 kg

PRECAUCIÓN:

El botón de control de alimentación del dispositivo y el interruptor de alimentación de la fuente de alimentación no desconectan la corriente eléctrica suministrada al dispositivo. Además, el dispositivo podría tener más de un cable de alimentación. Para suprimir toda la corriente eléctrica del dispositivo, asegúrese de que todos los cables de alimentación estén desconectados de la toma de corriente.

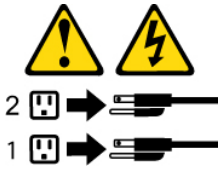

Chapter 3. Diagnostics and troubleshooting

Overall procedure

Use the following procedures as a guide in identifying and correcting problems.

Step 1. Quick diagnostics and troubleshooting:

a. If a general error is reported by a program or operating system (OS), check the software documentation (like error messages, readme, or help guides) for instructions.

b. Use an antivirus program to see if the computer has been infected by a virus. If the program detects a virus, remove the virus.

c. Check if any necessary fixes or updates for software, OS, drivers, or UEFI BIOS are available. If yes, install them.

d. Check all cable, power cord, and device connections.

e. Check and ensure that all connected devices are enabled in the UEFI BIOS.

f. Set all display controls to the middle position.

g. Restart the computer and all connected devices.

Step 2. Further diagnostics and troubleshooting:

a. Use diagnostic tools to narrow down the issue. See “Diagnostic tools” on page 32.

b. Recover the OS if you suspect an OS issue. See Appendix B “Self-help resource” on page 80.

c. Determine if any action or hardware replacement is required based on the symptoms in “Symptom-to-CRU/FRU index” on page 34
Turn to Chapter 4 “Hardware replacement” on page 41 for detailed replacement instructions.

d. For undetermined problems, see “Undetermined problems” on page 38.

Step 3. If the diagnosing procedures above cannot help you isolate and repair the problems, save and print the log files and contact Lenovo for support. See “Call Lenovo” on page 38.

Notes:

- The diagnostic tests are intended to test only Lenovo products. The use of non-Lenovo products, prototype cards, or modified options can lead to false indications of errors and invalid system responses.
- The troubleshooting steps or the diagnostic tools might tell you that you need additional or updated device drivers or other software. For the latest drivers and technical updates, go to https://support.lenovo.com.
- **Be extremely careful during write operations such as copying, saving, or formatting.** The drives in the computer you are servicing might have been rearranged or the drive startup sequence changed. If you select an incorrect drive, data or programs might be overwritten.
- Due to the variety of hardware and software combinations that can be encountered, use the information listed in “Before contacting Lenovo support” on page 39 to assist you in problem determination.
- Comparing the configuration and software set-up between working and non-working systems will often lead to problem resolution. To eliminate confusion, identical systems are considered identical only if the following criteria are the same.
  - Same machine type and model
  - Same BIOS version
  - Same adapters/attachments in the same locations

© Copyright Lenovo 2026

- Same address jumpers/terminators/cabling
- Same software versions and levels
- Same Diagnostic Diskette and version
- Same configuration options set in the system
- Same setup for OS control files

Diagnostic tools

The following table lists some common diagnostic tools for Lenovo computers, including their running environments and brief introductions.

Table 1. Diagnostic tools

Diagnostic tool	Running environment	Brief introduction
“Hardware scan in Vantage” on page 32	Run in the OS.	The hardware scan feature in the Vantage application allows you to have a quick test of key hardware modules on the computer.
“Lenovo UEFI diagnostic tool” on page 32	Run in the UEFI BIOS.	The Lenovo UEFI diagnostic tool enables you to test hardware modules, view system information, and check and recover bad sectors on internal storage devices during system startup.
“Advanced diagnostic tools” on page 33	Run in the OS or boot from USB.	If the computer does not have the diagnostic tools above, or if you want an extensive hardware test, you can download an advanced diagnostic tool from the Lenovo Support Web site.

Note: Tool availability may vary by model.

Hardware scan in Vantage

The hardware scan feature in the Vantage application allows you to have a quick test of key hardware modules on the computer.

To run the hardware scan:

Step 1. Launch the Vantage app.

Step 2. Click **Hardware scan** or **Support Services → Hardware scan**.

Step 3. Choose one of the following ways to run the hardware scan:

Click **Refresh Modules** and check the list of hardware components currently available in the computer. Select **QUICK SCAN** to test all the hardware components detected.

Select **CUSTOMIZE** to choose one or several hardware components to be tested.

Step 4. If any hardware failure is detected, the result varies depending on the warranty status and varies by country or region. Follow the on-screen instructions to resolve the issue.

Lenovo UEFI diagnostic tool

The preloaded Lenovo UEFI diagnostic tool enables you to test and diagnose hardware modules in the computer during system startup.

To use the Lenovo UEFI diagnostic tool:

Step 1. Turn on the computer.

Step 2. When the logo screen is displayed, repeatedly press and release the F10 key.

Step 3. When the home screen of the diagnostic tool appears, select a specific hardware module for targeted testing or select **RUN ALL** for a full test.

Note: Some tests may require user interaction. Follow the prompts carefully.

Table 2. Options on the home screen of the UEFI diagnostic tool

Category	Items
Tests	• Storage • Memory • CPU • Display • Motherboard • RAID • Optical
Tools	• System Information • Bad Block Recovery • Smart Information

Note: The options on the home screen might vary, depending on the hardware configuration and the corresponding protocol the BIOS supports.

Prepare a USB flash drive formatted in FAT32. After testing, select **View Log → Export Log** and save the log to the USB drive. You can view the log to find possible solutions or send the log to Lenovo for helps.

Advanced diagnostic tools

The advanced diagnostic tools is a suite of downloadable packages that can be run in different operating environments. These tools offer extended tests over various hardware modules. Depending on whether you can boot the Windows OS, select either of the following for diagnostics.

Use the advanced diagnostic tool (Windows version)

Step 1. Go to https://www.lenovo.com/diags.

Step 2. Select a Windows package that fits your scenario for download.

Step 3. Double-click the downloaded file and complete the installation.

Step 4. Launch the application and follow the on-screen instructions for diagnostics.

After testing, select **Export Log** to save the diagnostic result. You can view the log to find possible solutions or send the log to Lenovo for helps.

Use the advanced diagnostic tool (bootable versions for Linux/UEFI)

Step 1. Prepare a USB flash drive (more than 2 GB) formatted in FAT32.

Note: Back up any important data on the USB drive, as it will be erased during the process.

Step 2. Go to https://support.lenovo.com/solutions/bootableusb.

Step 3. Follow the instructions to download a diagnostic package that fits your scenario, create the bootable USB drive, and run the diagnostic tool from the USB drive.

Note: For diagnostic packages, UEFI offers both x64 and ARM versions, while Linux offers only an x64 version.

Step 4. When the home screen of the diagnostic tool appears, select a specific hardware module for targeted testing or select **RUN ALL** for a full test.

Note: Some tests may require user interaction. Follow the prompts carefully.

After testing, select **View Log → Export Log** and save the log to the USB drive. You can view the log to find possible solutions or send the log to Lenovo for helps.

For more information, go to https://www.lenovo.com/diags.

Symptom-to-CRU/FRU index

The Symptom-to-CRU/FRU index lists error symptoms and possible causes. The most likely cause is listed first. This index can also be used to help you decide which CRUs/FRUs are likely to need replacing next. If you are unable to correct the problem using this index, go to “Undetermined problems” on page 38.

Notes:

- The Symptom-to-CRU/FRU index is not specific to any machine type and is applicable to all computers.
- If you have both an error message and an incorrect audio response, diagnose the error message first.
- If you cannot run the diagnostic tests or you get a diagnostic error code when running a test, but did receive a POST error message, diagnose the POST error message first.
- If you did not receive any error message, look for a description of the error symptoms in this index.

POST error codes

Each time you turn on the system, it performs a series of tests that check the operation of the system and some options. This series of tests are called the *Power-On Self-Test*, or *POST*. POST checks the following operations:

- Some basic system-board operations
- Memory operation
- Video operation
- Whether the boot drive is working

If the POST detects a problem, an error code appears on the screen. If more than one error code is displayed, begin the diagnosis with the first error code. Whatever causes the first error code might also cause false error codes.

POST error code	POST error message	Description	Action
0135	CPU fan failure	This error message is displayed when a fan fails and the system might be overheating.	Press F10 to exit.
0162	Setup data integrity check failure	This error indicates the checksum of BIOS Setup data in NVRAM is bad.	In BIOS Setup, the “Save Changes and Exit” operation is needed in order to clear this error.

POST error code	POST error message	Description	Action
0164	Memory configuration change has occurred	This error message is displayed when the memory size is changed.	Press F10 to exit.
1762	Storage device configuration change has occurred	This error message is displayed when a hard disk drive change or an optical drive change has been made.	Press F10 to exit.

Beep symptoms

Beep symptoms are tones or a series of tones separated by pauses (intervals without sound) during POST. The following table describes the beep symptoms.

Beep symptom	Error	CRU/FRU or Action
2 short beeps	Common POST error	See the detailed failure information in “POST error codes” on page 34.
3 short and 1 long beeps	DRAM memory error	Perform the following actions in order: 1. Make sure that the memory modules are properly seated in the memory slots. 2. Replace the memory modules. 3. Replace the system board.

Storage drive boot error

A storage drive boot error can have the following causes.

Possible cause	CRU/FRU or Action
The start-up drive is not in the boot sequence in configuration.	Check the configuration and ensure that the start-up drive is in the boot sequence.
No operating system is installed on the boot drive.	Install an operating system on the boot drive.
The boot sector on the startup drive is corrupted.	The drive must be formatted. Do the following: 1. Attempt to back up the data on the failing storage drive. 2. Using the operating system programs, format the storage drive.
The drive is defective.	Replace the storage drive.

Power supply problems

If you suspect a power problem, use the following procedures.

Check/Verify	CRU/FRU or Action
Check the following for proper installation. • Power cord • On/Off switch connector • On/Off switch power supply connector • System board power supply connectors • CPU connection	Reseat connectors.
Check the power cord for continuity.	Power cord
Check the power-on switch for continuity.	Power-on switch

Miscellaneous error conditions

Message/Symptom	CRU/FRU or Action
Changing display colors	Display/Monitor
The computer will *not* power-off. See “Storage drive boot error” on page 35.	1. Power switch 2. System board 3. Riser card, if installed.
The computer will *not* RPL from server	1. Ensure that the network is in startup sequence as the first device or the first device after diskette. 2. Ensure that the network adapter is enabled for RPL. 3. Network adapter (Advise network administrator of new MAC address)
The computer will *not* perform a Wake On LAN® (if applicable)	1. Check the power supply and signal cable connections to the network adapter. 2. Ensure that the operating system settings are set to enable Wake on LAN. 3. Ensure that the Wake On LAN feature is enabled in Setup/ Configuration. 4. Ensure that the network administrator is using the correct MAC address. 5. Ensure no interrupt or I/O address conflicts. 6. Network adapter (advise network administrator of new MAC address)
Dead computer. See “Storage drive boot error” on page 35.	1. Power supply 2. System board
Diskette drive in-use light remains on or does not light when drive is active.	1. Diskette drive 2. System board 3. Diskette drive cable
Blank screen except for flashing cursor.	1. System board 2. Primary hard disk drive 3. Hard disk drive cable

Message/Symptom	CRU/FRU or Action
Incorrect memory size during POST	1. Run the memory tests. 2. Memory module 3. System board
"Insert a Diskette" icon appears with a known-good diagnostics diskette in the first 3.5-inch diskette drive.	1. System board 2. Diskette drive cable 3. Network adapter
Intensity or color varies from left to right of characters and color bars	1. Display 2. Video adapter (if present) 3. System board
No power or fan not running	1. See “Storage drive boot error” on page 35.
Non-system disk or disk error-type message with a known-good diagnostic diskette.	1. Diskette drive 2. System board 3. Diskette drive cable
Other display symptoms not listed above (including blank or illegible display)	1. Display 2. System board
Power-on indicator or hard disk drive in-use light not on, but computer works correctly	1. Power switch/LED assembly 2. System board
Printer problems	1. Printer 2. System board
Program loads from the hard disk with a known-good diagnostics diskette in the first 3.5-inch diskette drive	1. Run the Setup Utility program and check the startup sequence. 2. Diskette drive 3. Diskette drive cable 4. System board 5. Power supply
RPL computer cannot access programs from its own hard disk.	1. If the network administrator is using LCCM Hybrid RPL, check the startup sequence: a. **First device - network** b. **Second device - hard disk** 2. Hard disk drive
RPL computer does not RPL from server	1. Check the startup sequence. 2. Check the network adapter LED status.
Serial or parallel connector device failure (system board connector)	1. External device self-test OK? 2. External device 3. Cable 4. System board

Message/Symptom	CRU/FRU or Action
Serial or parallel connector device failure (adapter connector)	1. External device self-test OK? 2. External device 3. Cable 4. Alternate adapter 5. System board
Some or all keys on the keyboard do not work	1. Keyboard 2. Keyboard cable 3. System board

Undetermined problems

It is recommended that you take the steps below to isolate the failing CRU/FRU (if any) in the following situations:

- The diagnostic procedures above did not identify the device that has failed.
- The wrong devices are installed.
- The system simply is not operating.

Step 1. Verify that all attached devices are supported by the computer.

Step 2. Turn off the computer.

Step 3. Visually check each CRU/FRU for damage. Replace any damaged CRU/FRU.

Step 4. Remove or disconnect all of the following devices (if present).

a. External devices (modem, printer, or mouse)
b. Any adapters
c. Memory modules
d. Extended video memory
e. External Cache
f. External Cache RAM
g. Solid-state drive
h. Hard disk drive
i. Diskette drive

Step 5. Turn on the computer to see whether the problem has been solved.

Step 6. If the problem does not recur, reconnect the removed devices one at a time until you find the failing FRU/CRU.

Step 7. If the problem remains, replace the following FRUs one at a time (do not replace a nondefective FRU):

a. System board
b. Display assembly (if present)

Call Lenovo

If you have tried to correct the problem yourself and still need help, you can call Lenovo Customer Support Center.

Before contacting Lenovo support

Prepare the following information (especially those shown in **bold**) as much as possible before requesting assistance from Lenovo Service Support and Engineering functions.

- **Product name, machine type and model (MTM), and serial number (SN)**
- Failure symptom
  - **What is the problem?**
  - When and where does it happen (e.g., on single or multiple systems)?
  - **Is the problem continuous or intermittent?**
  - **Are there any error messages or codes?**
  - **Can the problem be reproduced? If yes, describe how.**
  - Has the current configuration ever worked before?
  - If it was working, what changed before the failure occurred?
  - Is this the original reported issue, or has it evolved?
- Software information
  - **Operating system type and version**
  - **Software applications running at the time of failure (name and version)**
- Hardware information
  - BIOS version
  - Processor or hard disk drive upgrades information
  - Hardware configuration currently in use
- Diagnostics information
  - Did diagnostics indicate a failure?
  - What is the diagnostics type and version used?

Find the serial number

This topic helps you find the computer serial number.

You can find the serial number via one of the following.

- Open the Vantage app and navigate to **Dashboard** or **Device**.
- Check the machine-type and serial-number label on the computer (see illustration below).

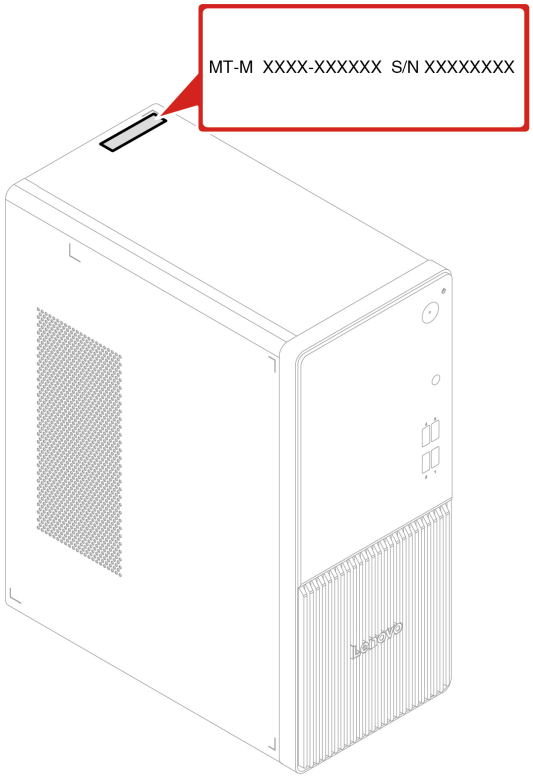

Lenovo Customer Support Center

During the warranty period, you can call Lenovo Customer Support Center for help.

Telephone numbers

For a list of the Lenovo Support phone numbers for your country or region, go to:
https://pcsupport.lenovo.com/supportphonelist

Note: Phone numbers are subject to change without notice. If the number for your country or region is not provided, contact your Lenovo reseller or Lenovo marketing representative.

Chapter 4. Hardware replacement

Before hardware replacement

Carefully read this section before replacing or installing any hardware component.

Service tools

The following table lists all tools for servicing Lenovo products. Tools required to service a part are listed in the specific part disassembly topic. Prepare them before you service the product.

Table 3. Service tools

No.	Reference image	Tool name	Specification	Tool type
1		Screwdriver set	• PH0, PH00, PH1, PH2 • T5, T15, T20, T30 **Note:** Use a screwdriver with the shank length more than 6 inches for desktop, workstation, and smart device products.	Common tool
2		Pry tool	N/A	Common tool
3		Tweezers	• Conductive • Isolated	Common tool
4		Suction cup	N/A	Common tool
5		Hexagonal socket	• For VGA: H5 mm or H4.8 mm • For Tiny antenna: H8 mm	Common tool
6		Adjustable torque screwdriver	0.2 Nm to 4.0 Nm, Threadripper CPU, CAMM, etc.	Common tool

© Copyright Lenovo 2026

Table 3. Service tools (continued)

No.	Reference image	Tool name	Specification	Tool type
7		ESD mat	N/A	Common tool
8		USB flash drive	For Golden Key, Chrome Reloads, AutoPilot, etc	Common tool
9	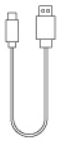	USB-C to USB-A converter	N/A	Common tool
10		Thermal pad	Thermal pads are typically used under the component in different thickness, the most common being 0.5 mm.	Consumable tool
11		Thermal interface materials	N/A	Consumable tool
12		Acetate tape	N/A	Consumable tool
13		Polyimide tape	N/A	Consumable tool
14		Mylar tape	N/A	Consumable tool
15		Electrical tape	N/A	Consumable tool

Table 3. Service tools (continued)

No.	Reference image	Tool name	Specification	Tool type
16	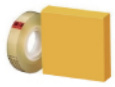	Double-sided tape	N/A	Consumable tool
17		Conductive tape	N/A	Consumable tool
18		Eraser	N/A	Consumable tool
19		Cleaning wipes	N/A	Consumable tool
20	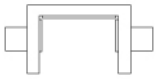	Touchpad jig (this might come with touchpad)	N/A	Consumable tool
21		Heat gun	N/A	Special tool
22		Brown brush	25 mm to 35 mm wide	Special tool
23		Contact cleaner spray	WD-40 Contact cleaner for battery connector	Special tool
24		Hexagonal socket	H17 mm	Special tool

Screw list

The following table includes the screw list of this product and the recommended screwdriver type.

Table 4. Screw list of this product and the recommended screwdriver type

Screw head type	Thread (mm)	Length (mm)	Color	Screwdriver type
Phillips head	M2	L3	Black	PH1
Phillips head	M2	L4	Black	PH1
Phillips head	M3	L5	Blue	PH2
Hex head	M3	L5	Silver	H5
Phillips head	M4	L4.7 + 6.9	Black	PH1
Phillips head	M5	L6.8	Silver	PH2

Notes:

- The number after the letter M refers to the diameter of the screw shank measured across the outermost points in a metric screw. The number after the letter L refers to the length of the screw shank, measured from the underside of the head to the tip.

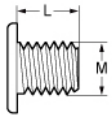

- The Phillips head screw has a cross-shaped slot in the screw head.
- The Hex head screw has a hexagonal head.

CRU/FRU definition

Your computer contains the following types of “Customer Replaceable Unit” (CRU)s and “Field Replaceable Unit” (FRU)s:

- **Self-service CRUs:** Refer to parts that can be replaced easily by customers themselves or by trained service technicians at an additional cost.
- **Optional-service CRUs:** Refer to parts that can be replaced by customers with a greater skill level. Trained service technicians can also provide service to replace the parts under the type of warranty designated for the customer’s product.
- **FRUs:** Refer to parts that are more complicated to replace and it is recommended that these parts should be replaced by trained service technicians. If customers elect to replace the FRU by themselves, we recommend that you ensure the correct instructions are carefully followed.

Important notes:

- **CRU/FRU statement:**
  - Each CRU/FRU is available for all types or models, unless otherwise specified.
  - **Replace a CRU/FRU only with another CRU/FRU of the correct model.** When you replace a CRU/FRU, ensure that the model of the product and the CRU/FRU part number are correct.
  - **A CRU/FRU should not be replaced because of a single unreproducible failure.** Single failures can occur for a variety of reasons that have nothing to do with a hardware defect, such as cosmic radiation, ESD, or software errors. Consider replacing a CRU/FRU only when a problem recurs. If you suspect that a CRU/FRU is defective, clear the error log and run the test again. If the error does not recur, do not replace the CRU/FRU.

- **Be careful not to replace a nondefective CRU/FRU.**
- When you need to return a CRU/FRU after servicing a computer, include the following information in the parts exchange form or parts return form that you attach to it:
  1. Name and phone number of service technician
  2. Date of service
  3. Date on which the machine failed
  4. Date of purchase
  5. Failure symptoms, error codes appearing on the display, and beep symptoms
  6. Procedure index and page number in which the failing CRU/FRU was detected
  7. Failing CRU/FRU name and part number
  8. Machine type, model number, and serial number
  9. Customer's name and address

- **CRU/FRU replacement strategy:**

  Use the following strategy to prevent unnecessary expense for replacing and servicing parts:

  - If you are instructed to replace a part but the replacement does not correct the problem, reinstall the original part before you continue.
  - Some computers have both a processor board and a system board. If you are instructed to replace either the processor board or the system board, and replacing one of them does not correct the problem, reinstall that board, and then replace the other one.
  - If an adapter or a device consists of more than one part, any of the parts may be the cause of the error. Before replacing the adapter or device, remove the parts one by one to see if the symptoms change. Replace only the part that changed the symptoms.

- **CRU statement for customers:**

  - You can resolve some problems with your product by replacing a CRU. *For self-service CRUs, installation is your responsibility. For optional-service CRUs, you can either install the CRU yourself or you can request that a Service Provider install the CRU according to the warranty service for your product.*

    Important: For users in mainland China, users shall not perform maintenance on their own. Any faults or damage due to improper operation, modification, or failure to use parts provided by Lenovo are not covered by the warranty for this product. For product warranty information, refer to the warranty document provided with the product or go to the official Lenovo website at https://newsupport.lenovo.com.cn.
  - If you intend on installing the CRU, Lenovo will ship the CRU to you. CRU information and replacement instructions are shipped with your product and are available from Lenovo at any time upon request.
  - When you are required to return the defective CRU, (1) return instructions, a prepaid shipping label, and a container will be included with the replacement CRU; and (2) you might be charged for the replacement CRU if Lenovo does not receive the defective CRU within thirty (30) days of your receipt of the replacement CRU. See your Lenovo Limited Warranty documentation for full details.

CRU/FRU list

Exploded view

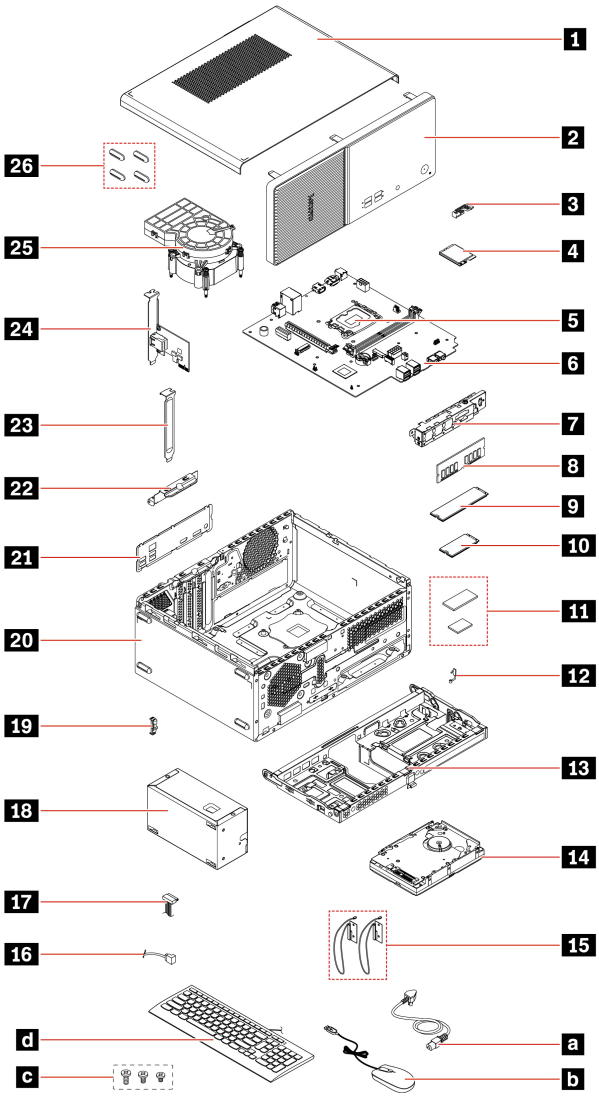

Part list

Self-service CRUs:

- 1 “Computer cover” on page 50
- 2 “Front bezel” on page 52
- 8 “Memory module” on page 65
- a power cord
- b Mouse*
- d Keyboard*

Optional-service CRU:

- 9 “M.2 2280 solid-state drive*” on page 63
- 10 “M.2 2242 solid-state drive*” on page 62
- 14 “Hard disk drive*” on page 58
- 18 “Power supply assembly” on page 66
- 24 “2.5G LAN card* or USB card*” on page 57

FRUs:

- 3 “Wi-Fi card shield*” on page 59
- 4 “Wi-Fi card*” on page 59
- 5 “CPU” on page 68
- 6 “System board” on page 69
- 7 “Front I/O bracket” on page 59
- 11 “M.2 solid-state drive thermal pad*” on page 64
- 12 “M.2 2242 solid-state drive clip” on page 62
- 13 “Drive bay assembly*” on page 53
- 15 “Wi-Fi antennas (front and rear)*” on page 60
- 16 Hard disk drive cable
- 17 SATA power cable
- 19 “Thermal sensor” on page 56
- 20 Chassis
- 21 “Rear I/O shield” on page 72
- 22 “PCI Express card latch” on page 51
- 23 “PCI Express card slot cover” on page 52
- 25 “Heat sink and fan assembly” on page 67
- 26 “Rubber feet” on page 50
- c Screws

* for selected models

Look up a part

1. For more detailed CRU/FRU information, including part numbers, descriptions, and substitution part numbers, go to https://support.lenovo.com/partslookup.
2. Type the product name, the machine type or the serial number in the corresponding field to get a general CRU/FRU list.

Prerequisites for hardware replacement

General prerequisites

Before replacing any parts, make sure you have:

- Read *Generic Safety and Compliance Notices* and any safety requirements for hardware maintenance in this manual.
- Installed any necessary software fixes, drivers, and UEFI BIOS downloads.

  To access these, go to https://support.lenovo.com and follow the on-screen instructions.

Prerequisites for opening computer covers



During operation, some components become hot enough to burn the skin. Before you open the computer cover, remove any media from the drives, turn off the computer and connected devices, disconnect power, remove all cables and locking devices, and wait approximately 10 minutes until the computer is cool.

Prerequisites for replacing parts with cables

Before reaching parts with cables, record the cable routing for future reference and then disconnect the cables from the system board.

Prerequisites for replacing internal storage drives

Attention: The internal storage drive is sensitive. Inappropriate handling might cause damage and loss of data. When handling the internal storage drive, observe the following guidelines:

- Replace internal storage drives only for repair. The internal storage drives are not designed for frequent changes or replacement.
- Before replacing an internal storage drive, make a backup copy of all the data that you want to keep, then perform a low-level format to erase all data.
- Be extremely careful during write operations such as copying, saving, or formatting. The drives in the computer you are servicing might have been rearranged or the drive startup sequence changed. If you select an incorrect drive, data or programs might be overwritten.
- Do not touch the contact edge of the internal storage drive. Otherwise, the internal storage drive might get damaged.
- Do not apply pressure or expose the drive to physical shocks or vibration. Place it on a soft surface, such as a cloth, for protection.

Prerequisites for replacing the power supply assembly (if supported)

Although there are no moving parts in the computer after the power cord has been disconnected, the following warnings are required for your safety.



Keep fingers and other parts of your body away from hazardous, moving parts. If you suffer an injury, seek medical care immediately. Never remove the cover on a power supply or any part that has the following label attached.



Hazardous voltage, current, and energy levels are present inside any component that has this label attached. There are no serviceable parts inside these components. If you suspect a problem with one of these parts, contact a service technician.

System board illustration

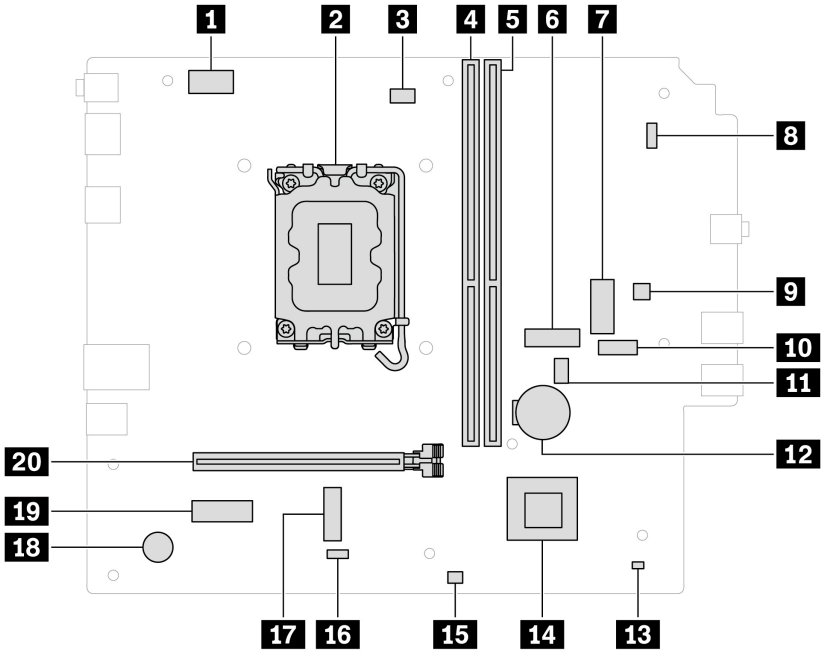

Item	Description	Item	Description
1	8-pin CPU power connector	2	CPU socket
3	CPU fan connector	4	Memory slot (DIMM1)
5	Memory slot (DIMM2)	6	M.2 solid-state drive (SSD) slot
7	10-pin power connector	8	Front panel header
9	SATA power connector	10	SATA connector
11	Auxiliary fan connector	12	Coin-cell battery
13	ME (management engine) disable jumper	14	PCH
15	Thermal sensor connector	16	Clear CMOS (Complementary Metal Oxide Semiconductor)/Recovery jumper
17	M.2 Wi-Fi card slot	18	Buzzer
19	PCI Express x1 card slot	20	PCI Express x16 card slot (supports graphics cards only)

Handling thermal interface materials

Thermal interface materials (TIMs) are applied at key thermal interfaces, such as between the processor and the heat sink or between the system board bottom and a structural cover, to eliminate air gaps and maximize thermal conductivity. Proper handling of TIMs is essential during servicing procedures like heat sink or processor replacement.

Before installing a part involving a TIM:

1. Remove all residual TIMs from both contact surfaces.
2. Apply new TIMs following the specifications below.

Note: Some replacement parts may have factory-applied TIMs. If present, check if the TIMs are intact and free of defects. If damaged or dried, clean and apply fresh TIMs per specifications below.

TIM specifications

The table below outlines the recommended TIM type, quantity, and application area.

Type	Quantity	Area
TC5622 or equivalent	0.35 g	a

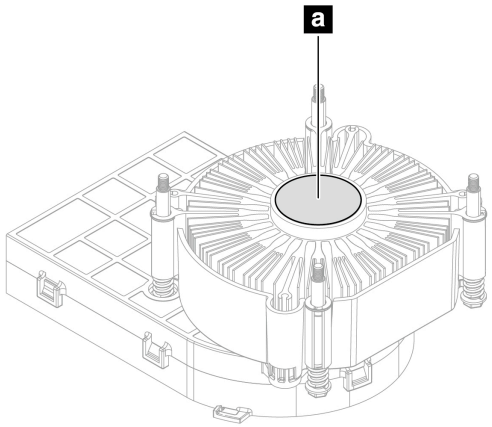

Figure 1. Designated TIM application area on the heat sink

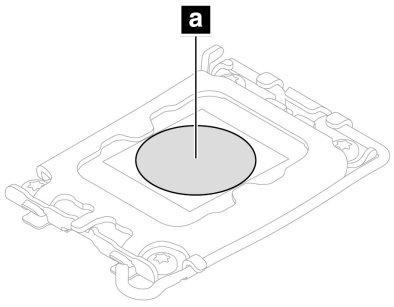

Figure 2. Processor surface area requiring TIM removal prior to reinstallation

External options

You can connect external options to your computer, such as external speakers, a printer, or a scanner. For some external options, you must install additional software in addition to making the physical connection. When installing an external option, see Chapter 1 “Product overview” on page 1 to identify the required connector. Then, use the instructions that come with the option to help you make the connection and install any required software or device drivers.

Rubber feet

Before you start, read “Prerequisites for hardware replacement” on page 47.

Replacement steps

Step 1. For access, do the following:

1. Remove any media from the drives and turn off all connected devices and the computer.
2. Disconnect all power cords from electrical outlets and disconnect all cables from the computer.
3. Unlock any locking device that secures the computer cover.
4. Lay down the computer to place the computer cover facing up.

Step 2. Pull the rubber feet to remove them.

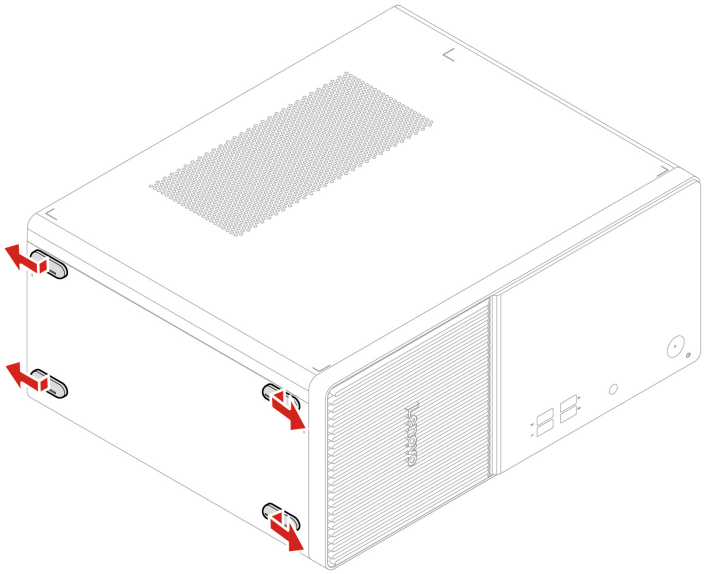

Step 3. Install the rubber feet in reverse order.

Computer cover

Before you start, read “Prerequisites for hardware replacement” on page 47.

Replacement steps

Step 1. For access, do the following:

1. Remove any media from the drives and turn off all connected devices and the computer.

2. Disconnect all power cords from electrical outlets and disconnect all cables from the computer.
3. Unlock any locking device that secures the computer cover.
4. Lay down the computer to place the computer cover facing up.

Step 2. Remove the two screws which secure the computer cover to the chassis, one screw at each edge of the chassis.

Step 3. Pull the computer cover to remove it.

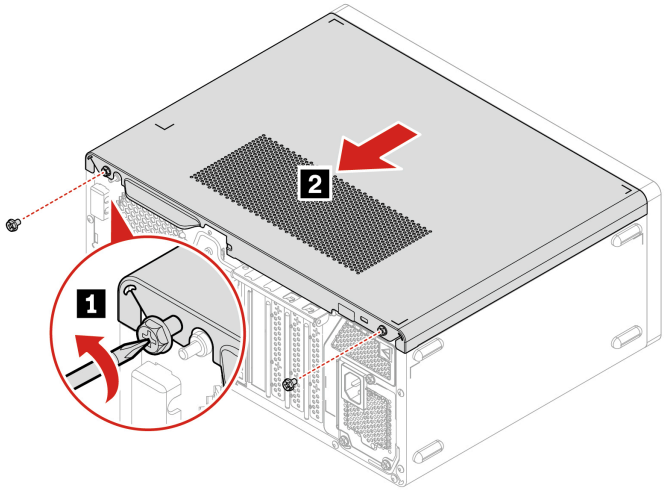

Location	Thread (mm)	Length (mm)	Torque (lbf·in)	Color	Quantity
1	M3	L5	5 ± 0.5	Silver	2

Note: If a locking device is available, use it to lock the computer after installing the computer cover.

Step 4. Install the computer cover in reverse order.

PCI Express card latch

Before you start, read “Prerequisites for hardware replacement” on page 47.

Replacement steps

Step 1. Remove the “Computer cover” on page 50.

Step 2. Open the PCI Express card latch to remove it.

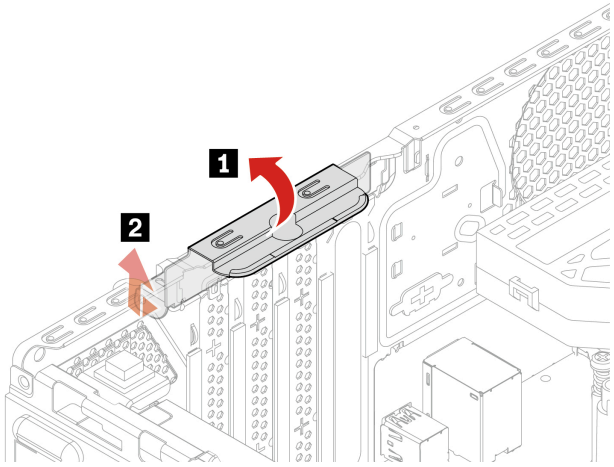

Step 3. Install the PCI Express card latch and other removed parts in reverse order.

PCI Express card slot cover

Before you start, read “Prerequisites for hardware replacement” on page 47.

Replacement steps

Step 1. Remove the “Computer cover” on page 50.
Step 2. Open the PCI Express card latch.
Step 3. Pull the PCI Express card slot cover upward to remove it.

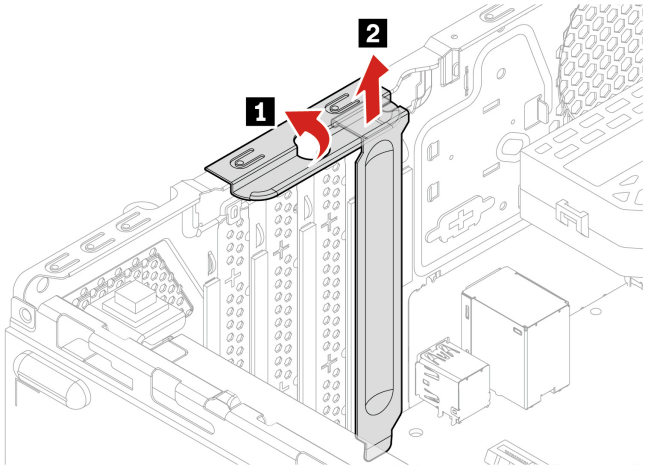

Step 4. Install the PCI Express card slot cover and other removed parts in reverse order.

Front bezel

Before you start, read “Prerequisites for hardware replacement” on page 47.

Replacement steps

Step 1. Remove “Computer cover” on page 50.
Step 2. Release three elastic hooks from the top of the front bezel.

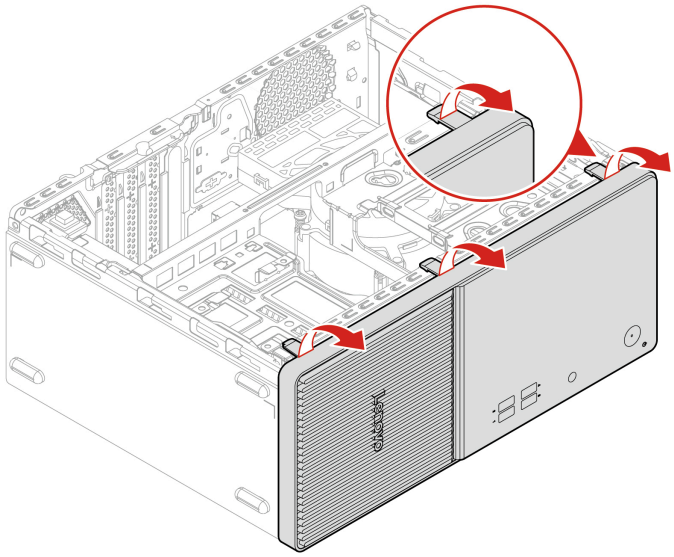

Step 3. Insert the three swivel hooks to each hook slot. Then, pivot the front bezel inwards to install it to the chassis.

Note: There are three swivel hooks at the bottom of the front bezel, and three corresponding hook slots at the bottom of the front panel.

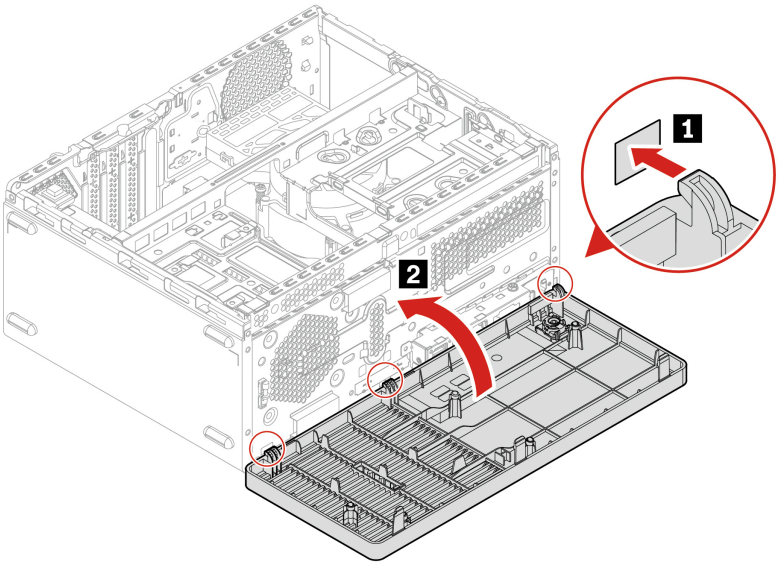

Drive bay assembly

Before you start, read “Prerequisites for hardware replacement” on page 47.

Removal steps

Step 1. For access, remove the following parts in order:

- “Computer cover” on page 50

- “Front bezel” on page 52

Step 2. Push up on the latch which secures the drive bay assembly to the chassis to release it.

Step 3. Pull out and pivot the drive bay assembly upward to remove it.

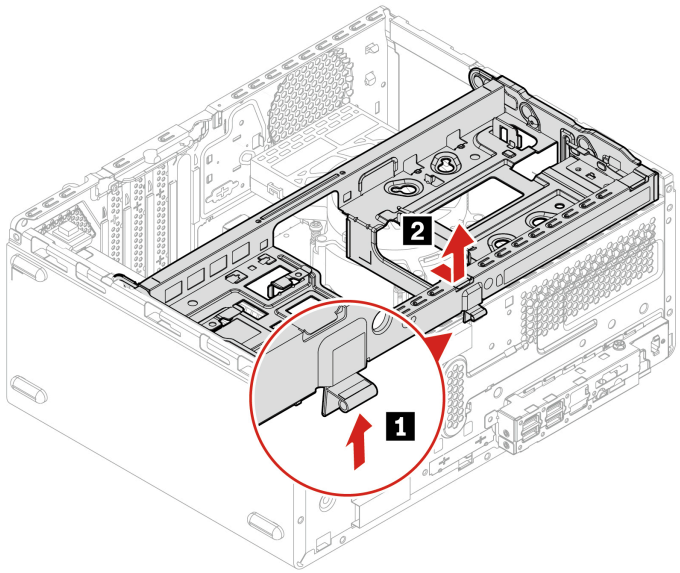

Installation steps

Step 1. Insert the drive bay assembly into the two slots.

Step 2. Pivot the drive bay assembly downward.

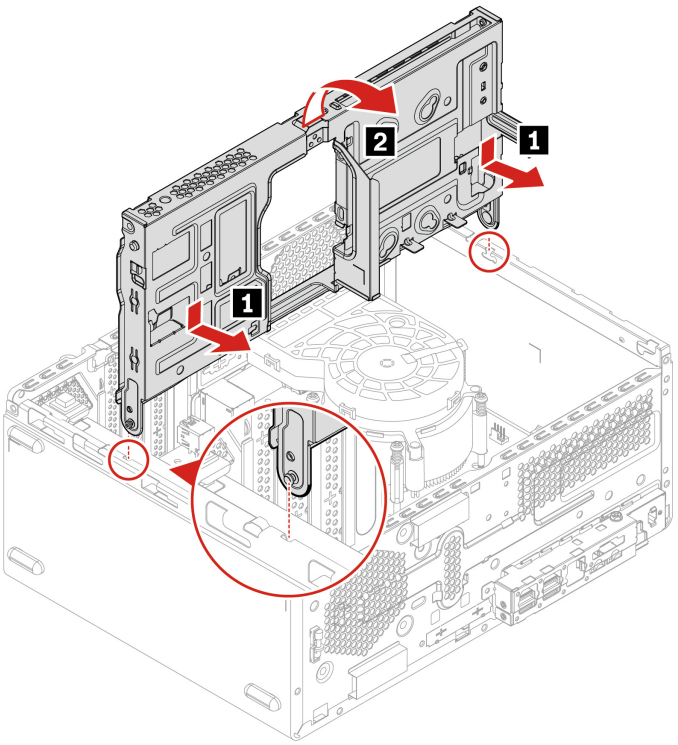

Step 3. Push the drive bay assembly inward to install it to the chassis.

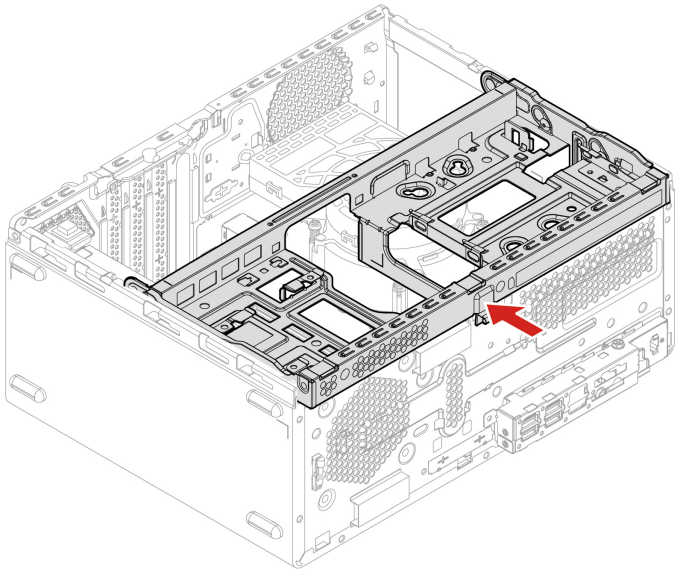

Step 4. Install other removed parts in reverse order.

Coin-cell battery

Before you start, read “Prerequisites for hardware replacement” on page 47.

About the coin-cell battery

The computer has a special type of memory that maintains the date, time, and settings for built-in features, such as parallel connector assignments (configurations). A coin-cell battery keeps this information active when you turn off the computer.

The coin-cell battery normally requires no charging or maintenance throughout its life; however, no coin-cell battery lasts forever. If the coin-cell battery fails, the date and time information is lost. An error message is displayed when you turn on the computer.

To dispose of the coin-cell battery, refer to the “Lithium coin-cell battery notice” in the *Safety and Warranty Guide*.

Replacement steps

Step 1. Remove the following parts, if any, in order.

- “Computer cover” on page 50.
- “Front bezel” on page 52
- “Drive bay assembly” on page 53

Step 2. Locate the coin-cell battery based on the “System board illustration” on page 48.

Step 3. Disengage the latch and remove the coin-cell battery.

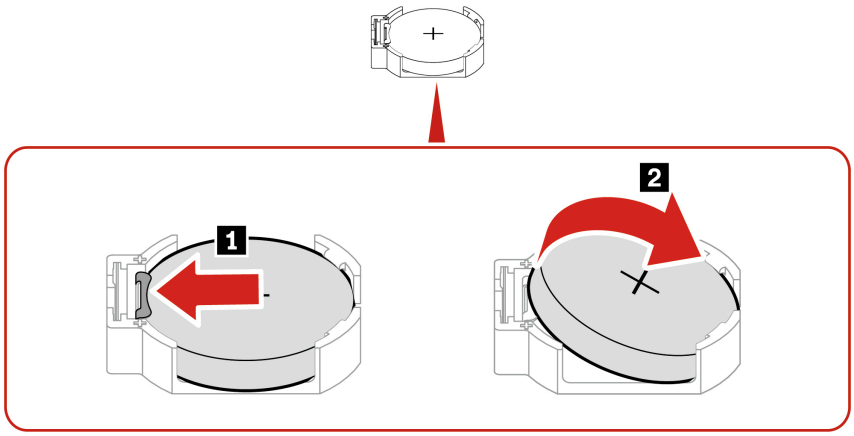

Step 4. Install the coin-cell battery and other removed parts in reverse order.

After replacement

After installing a new coin-cell battery, reset the system date and time in the UEFI BIOS menu.

Thermal sensor

Before you start, read “Prerequisites for hardware replacement” on page 47.

Replacement steps

Step 1. Remove the following parts, if any, in order.

- “Computer cover” on page 50
- “Front bezel” on page 52
- “Drive bay assembly” on page 53

Step 2. Disconnect the thermal sensor cable from the system board.

Step 3. Press down on the latch of the thermal sensor to release it from the chassis.

Step 4. Pull out and remove the thermal sensor.

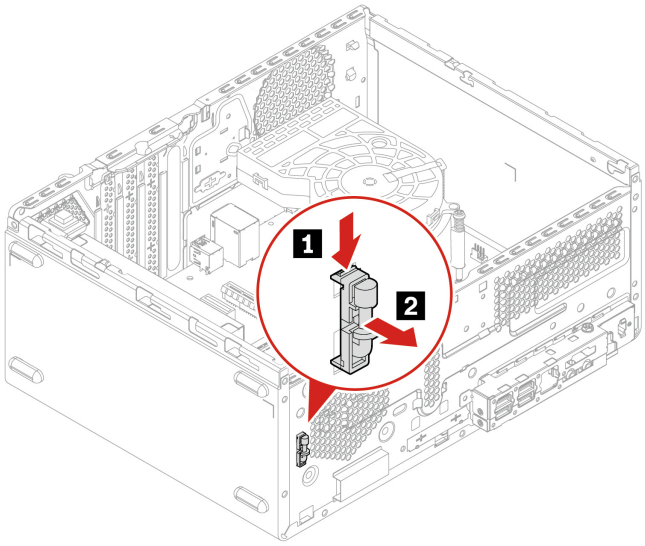

Step 5. Install the thermal sensor and other removed parts in reverse order.

2.5G LAN card or USB card

Before you start, read “Prerequisites for hardware replacement” on page 47.

Replacement steps

Step 1. Remove the following parts, if any, in order.

- “Computer cover” on page 50
- “Front bezel” on page 52
- “Drive bay assembly” on page 53

Step 2. Pivot the PCIe latch outwards and gently pull the card straight out of the PCIe slot. If the card is seated tightly, gently move it from side to side until it is released.

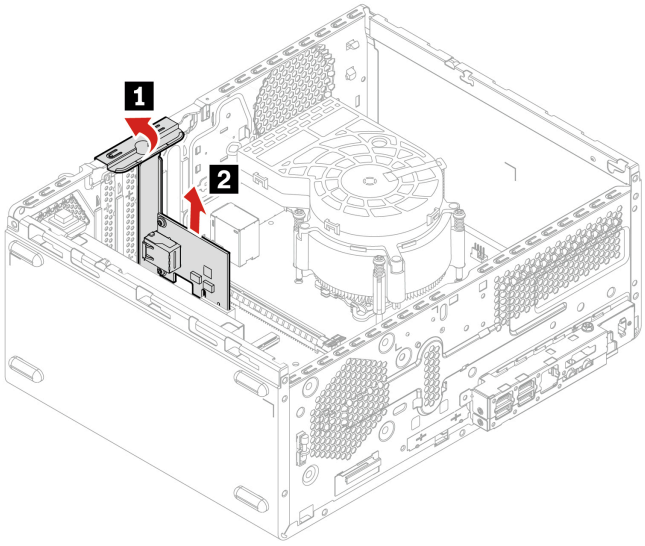

Step 3. Install the 2.5G LAN card or USB card and other removed parts in reverse order.

Hard disk drive

Before you start, read “Prerequisites for hardware replacement” on page 47.

Attention: The internal storage drive is sensitive. Inappropriate handling might cause damage and permanent loss of data. When handling the internal storage drive, observe the following guidelines:

- Replace the internal storage drive only for repair. The internal storage drive is not designed for frequent changes or replacement.
- Before replacing the internal storage drive, make a backup copy of all the data that you want to keep.
- Do not touch the contact edge of the internal storage drive. Otherwise, the internal storage drive might get damaged.
- Do not apply pressure to the internal storage drive.
- Do not make the internal storage drive subject to physical shocks or vibration. Put the internal storage drive on a soft material, such as cloth, to absorb physical shocks.

Replacement steps

Step 1. Remove the following parts, if any, in order.

- “Computer cover” on page 50
- “Front bezel” on page 52
- “Drive bay assembly” on page 53

Step 2. Disconnect the signal cable and the power cable from the hard disk drive.

Step 3. Remove the four screws which secure the hard disk drive to the drive bay assembly, two screws at each side of the hard disk drive. Then, remove the hard disk drive.

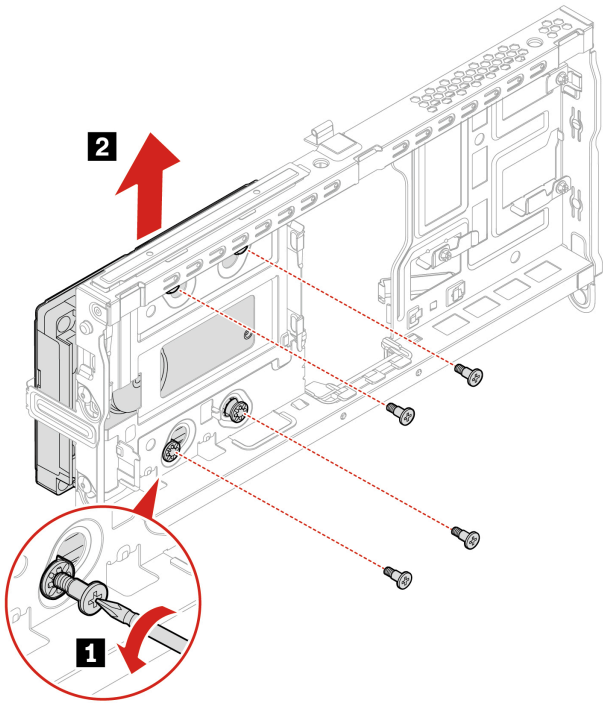

Location	Thread (mm)	Length (mm)	Torque (lbf·in)	Color	Quantity
1	M4	L4.7 + 6.9	5.0 ± 0.5	Black	4

Step 4. Install the hard disk drive and other removed parts in reverse order.

Front I/O bracket

Before you start, read “Prerequisites for hardware replacement” on page 47.

Replacement steps

Step 1. Remove the following parts, if any, in order.

- “Computer cover” on page 50
- “Front bezel” on page 52
- “Drive bay assembly” on page 53

Step 2. Disconnect the LED switch cable from the system board.

Step 3. Remove one screw and remove the front I/O bracket.

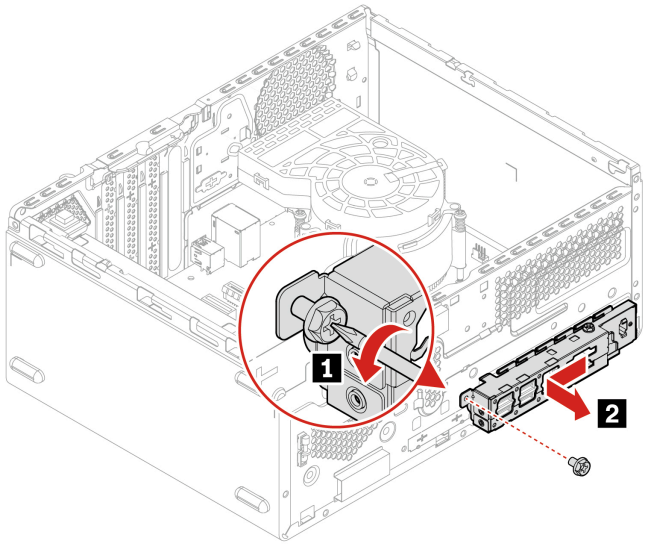

Location	Thread (mm)	Length (mm)	Torque (lbf·in)	Color	Quantity
1	M3	L5	5 ± 0.5	Silver	1

Step 4. Install the front I/O bracket and other removed parts in reverse order.

Wi-Fi card and Wi-Fi card shield

Before you start, read “Prerequisites for hardware replacement” on page 47.

Replacement steps

Step 1. Remove the following parts, if any, in order.

- “Computer cover” on page 50

- “Front bezel” on page 52
- “Drive bay assembly” on page 53

Step 2. Remove one screw and remove the Wi-Fi card bracket.

Step 3. Disconnect the Wi-Fi card antennas and pull out the Wi-Fi card.

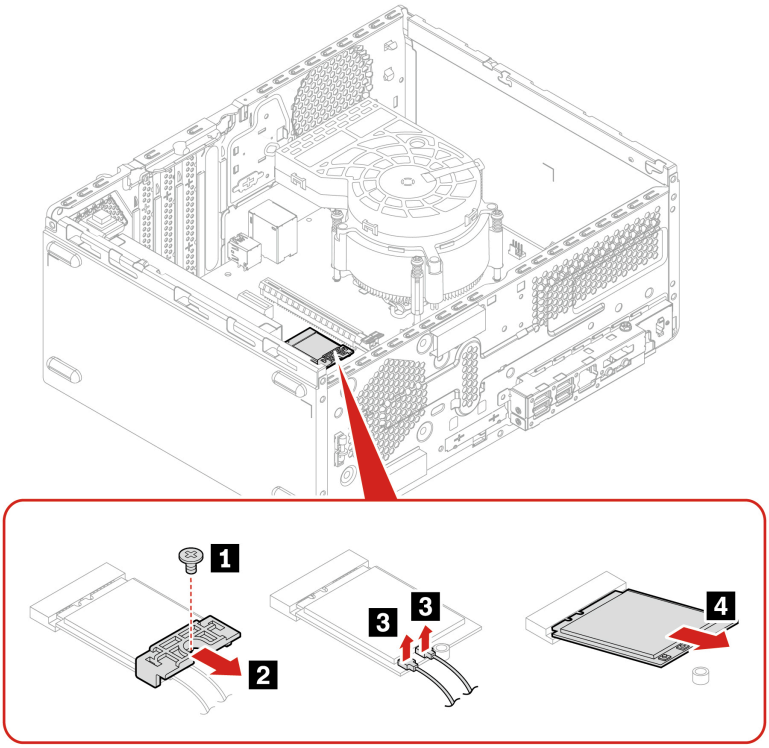

Location	Thread (mm)	Length (mm)	Torque (lbf·in)	Color	Quantity
1	M2	L3	1.5 ± 0.5	Black	1

Step 4. Install the Wi-Fi card, Wi-Fi card shield, and other removed parts in reverse order.

Note: While installing the Wi-Fi card, ensure that you connect the gray antenna cable to the connector labeled 1 (or AUX) and the black antenna cable to the connector labeled 2 (or MAIN) on the card.

Wi-Fi antennas and cables

Before you start, read “Prerequisites for hardware replacement” on page 47.

Replacement steps

Front Wi-Fi antenna and cable

Step 1. Remove the following parts, if any, in order.

- “Computer cover” on page 50
- “Front bezel” on page 52
- “Drive bay assembly” on page 53
- “Wi-Fi card and Wi-Fi card shield” on page 59

Step 2. Pull the front Wi-Fi antenna and cable to remove it.

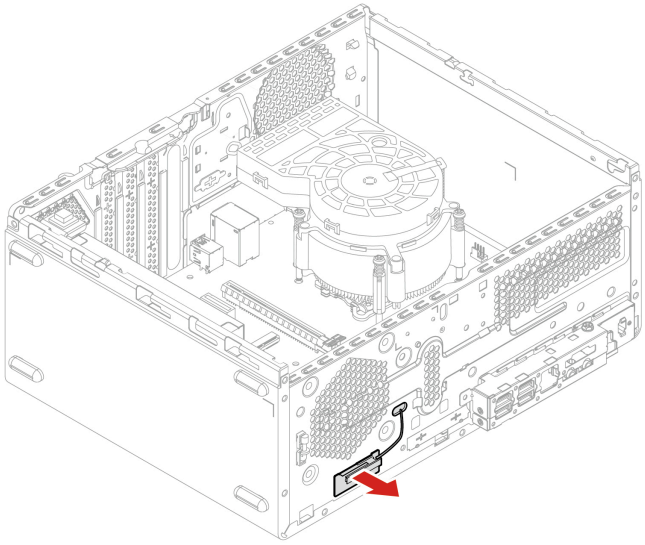

Step 3. Insert and install the front Wi-Fi antenna and cable.

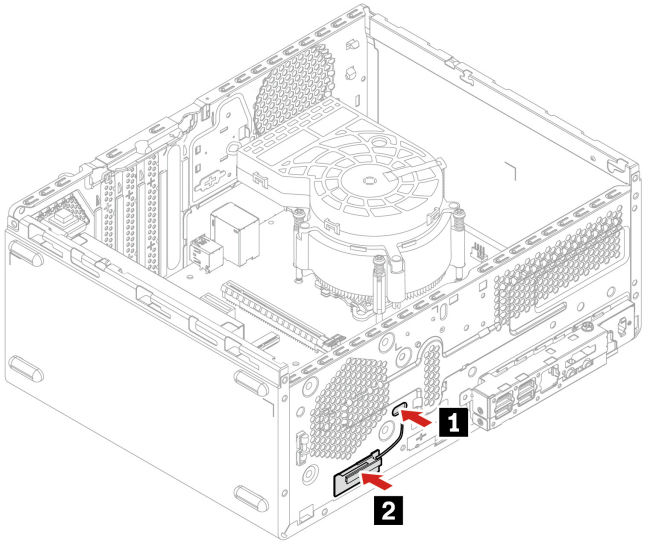

Step 4. Install other removed parts in reverse order.

Rear Wi-Fi antenna and cable

Step 1. Remove the following parts, if any, in order.

- “Computer cover” on page 50
- “Front bezel” on page 52
- “Drive bay assembly” on page 53
- “Wi-Fi card and Wi-Fi card shield” on page 59

Step 2. Pull the rear Wi-Fi antenna and cable to remove it.

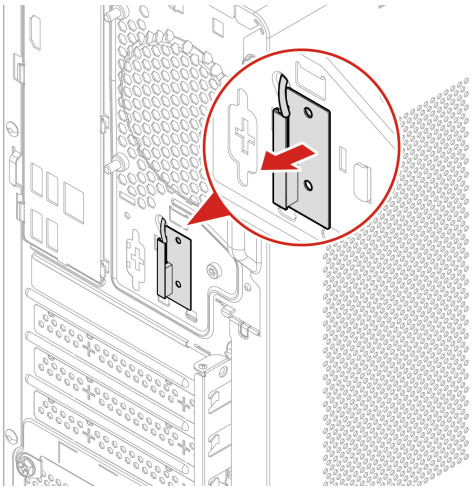

Step 3. Insert and install the rear Wi-Fi antenna and cable.

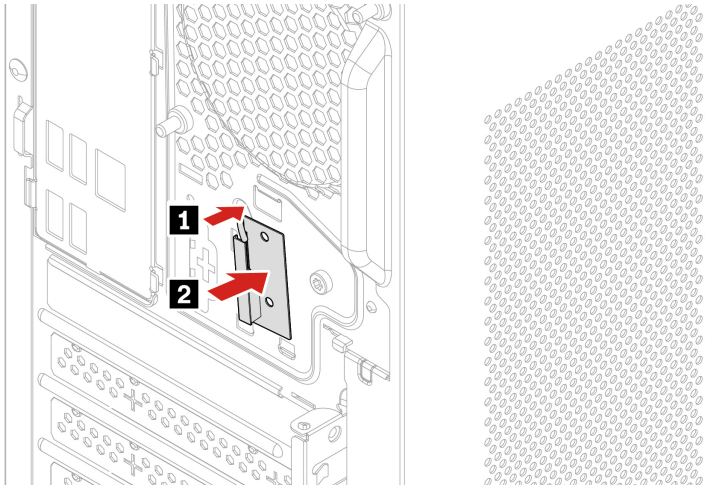

Step 4. Install other removed parts in reverse order.

M.2 solid-state drive

Before you start, read “Prerequisites for hardware replacement” on page 47.

Replacement steps

M.2 2242 solid-state drive and clip

Step 1. Remove the following parts, if any, in order.

- “Computer cover” on page 50
- “Front bezel” on page 52
- “Drive bay assembly” on page 53

Step 2. Locate the M.2 solid-state drive slots based on the “System board illustration” on page 48.

Step 3. Open the M.2 2242 solid-state drive clip and remove the M.2 2242 solid-state drive and thermal pad (if any) depending on the computer model.

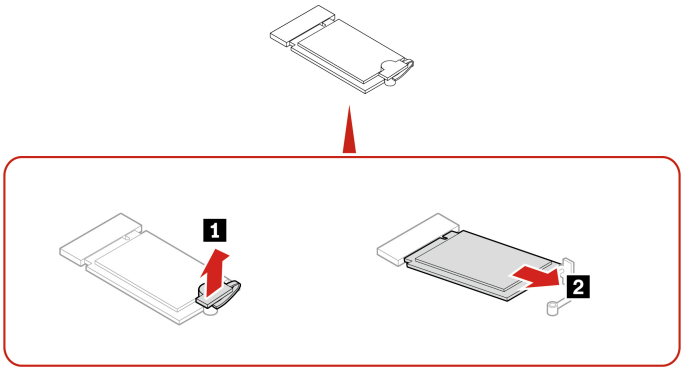

Step 4. Pinch the latches of the M.2 2242 solid-state drive clip and push the clip upwards to remove it from the system board.

Note: The clip position depends on the installed M.2 2242 solid-state drive and may differ from the illustration below.

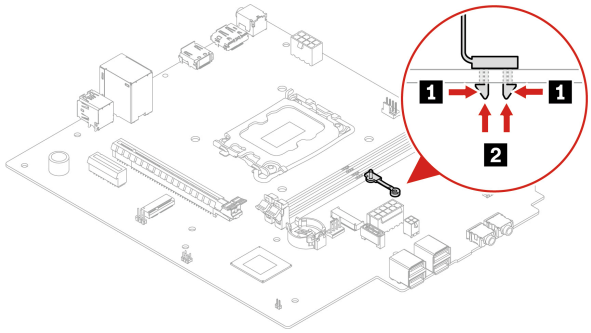

Step 5. Install the M.2 2242 solid-state drive and clip and other removed parts in reverse order.

Note: Remove the film that covers the thermal pad (if any) when installing the M.2 2242 solid-state drive and thermal pad.

M.2 2280 solid-state drive

Step 1. Remove the following parts, if any, in order.

- “Computer cover” on page 50
- “Front bezel” on page 52
- “Drive bay assembly” on page 53

Step 2. Locate the M.2 solid-state drive slots based on the “System board illustration” on page 48.

Step 3. Remove the screw which secures the M.2 2280 solid-state drive to the system board.

Step 4. Remove the M.2 2280 solid-state drive and thermal pad (if any) depending on the computer model.

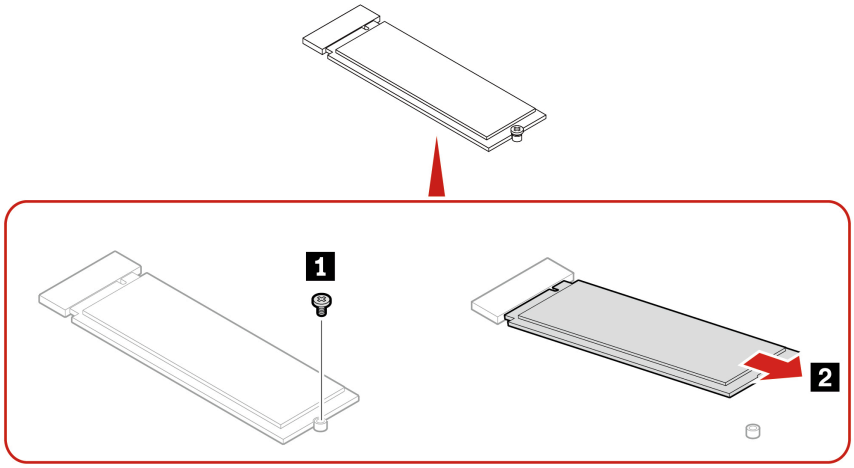

Location	Thread (mm)	Length (mm)	Torque (lbf·in)	Color	Quantity
1	M2	L4	1.5 ± 0.5	Black	1

Step 5. Install the M.2 2280 solid-state drive and other removed parts in reverse order.

Note: Remove the film that covers the thermal pad (if any) when installing the M.2 2280 solid-state drive and thermal pad.

M.2 solid-state drive thermal pad

Before you start, read “Prerequisites for hardware replacement” on page 47.

Replacement steps

M.2 2242 solid-state drive thermal pad

Step 1. Remove the following parts, if any, in order.

- “Computer cover” on page 50
- “Front bezel” on page 52
- “Drive bay assembly” on page 53
- “M.2 2242 solid-state drive and clip” on page 62

Step 2. Remove the M.2 2242 solid-state drive thermal pad.

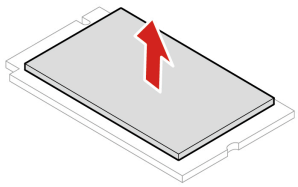

Step 3. Install the M.2 2242 solid-state drive thermal pad and other removed parts in reverse order.

M.2 2280 solid-state drive thermal pad

Step 1. Remove the following parts, if any, in order.

- “Computer cover” on page 50
- “Front bezel” on page 52
- “Drive bay assembly” on page 53
- “M.2 2280 solid-state drive” on page 63

Step 2. Remove the M.2 2280 solid-state drive thermal pad.

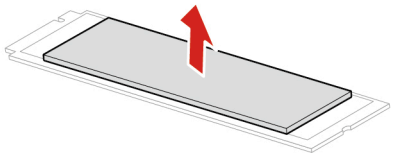

Step 3. Install the M.2 2280 solid-state drive thermal pad and other removed parts in reverse order.

Memory module

Before you start, read “Prerequisites for hardware replacement” on page 47.

Important notice for replacing the memory module

To avoid unexpected frequency reduction, ensure that you install memory modules in the following way:

- Install memory modules of the same type, the same capacity, and the same DRAM densities.
- Install memory modules in the order shown in the following illustration. This computer supports two DIMM slots. DIMM 1 slot is located closer to the CPU of the computer. If you have only one memory module, install it in DIMM 1 slot. If you have two memory modules, install them in both slots.

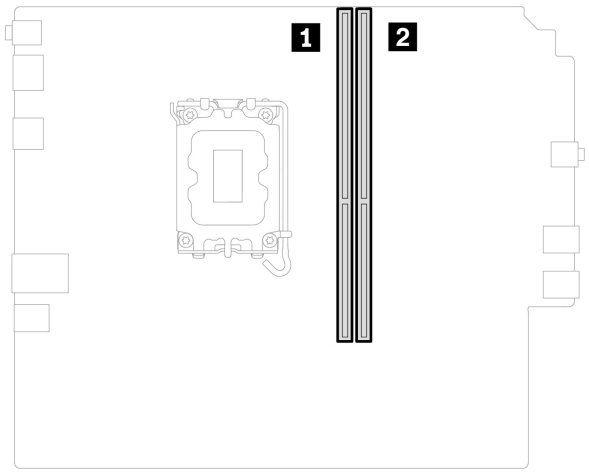

Replacement steps

Step 1. Remove the following parts, if any, in order.

- “Computer cover” on page 50
- “Front bezel” on page 52
- “Drive bay assembly” on page 53

Step 2. Open the two retaining clips on the two ends and gently pull the memory module out of the memory slot.

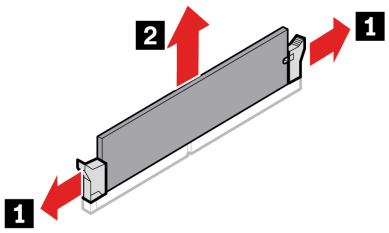

Step 3. Align the memory module to the slot and press down on both ends until the latches are fully engaged with a click.

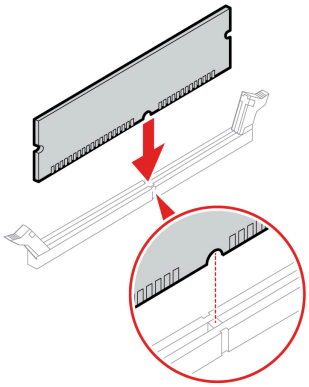

Step 4. Install other removed parts in reverse order.

Power supply assembly

Before you start, read “Prerequisites for hardware replacement” on page 47.

Replacement steps

Step 1. Remove the following parts, if any, in order.

- “Computer cover” on page 50
- “Front bezel” on page 52
- “Drive bay assembly” on page 53

Step 2. Disconnect the power supply assembly cables from the system board.

Step 3. Remove the three screws which secure the power supply assembly to the chassis.

Step 4. Press the retaining clip from inside of the chassis.

Step 5. Push the power supply assembly inwards to remove it.

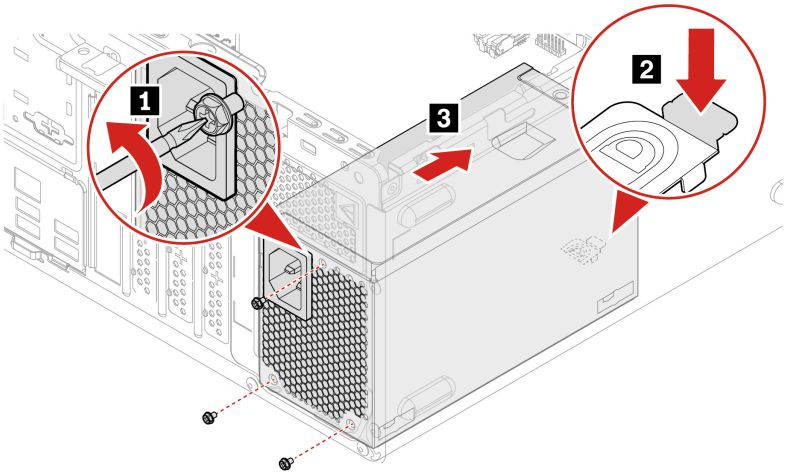

Location	Thread (mm)	Length (mm)	Torque (lbf·in)	Color	Quantity
1	M3	L5	5 ± 0.5	Silver	3

Step 6. Install the power supply and other removed parts in reverse order.

Heat sink and fan assembly

Before you start, read “Prerequisites for hardware replacement” on page 47.

Replacement steps

Step 1. Remove the following parts, if any, in order.

- “Computer cover” on page 50
- “Front bezel” on page 52
- “Drive bay assembly” on page 53

Step 2. Disconnect the fan cable from the system board.

Step 3. Loosen four screws in alphabetical order.

Note: Ensure that the heat sink and fan assembly is horizontal when loosening or fastening the screws.

Step 4. Remove the heat sink and fan assembly.

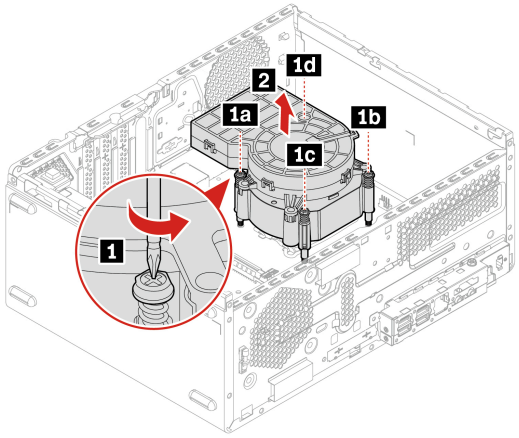

Location	Thread (mm)	Length (mm)	Torque (lbf·in)	Color	Quantity
1	M5	L6.8	5 ± 0.5	Silver	4

Step 5. Remove old TIMs and apply new TIMs following the instructions in “Handling thermal interface materials” on page 49.

Step 6. Fasten four screws in the alphabetic order. Install the heat sink and fan assembly.

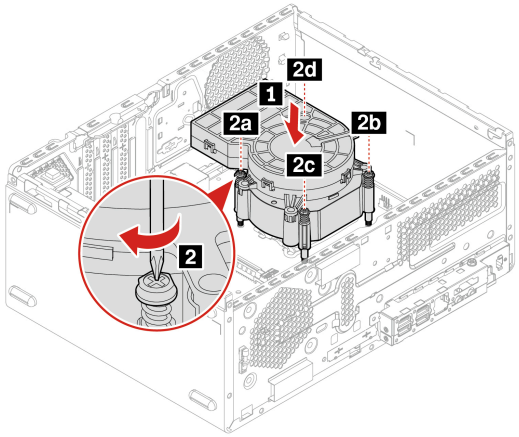

Step 7. Install other removed parts in reverse order.

CPU

Before you start, read “Prerequisites for hardware replacement” on page 47.

Important notice for handling the CPU

- Do not drop anything onto the CPU socket while it is exposed. The socket pins must be kept as clean as possible.
- Touch only the edges of the CPU. Do not touch the gold contacts on the bottom.
- Ensure that you install the correct type of CPU option that the computer supports.

Replacement steps

Step 1. Remove the following parts, if any, in order.

- “Computer cover” on page 50
- “Front bezel” on page 52
- “Drive bay assembly” on page 53
- “Heat sink and fan assembly” on page 67

Step 2. Release the latch and remove the CPU.

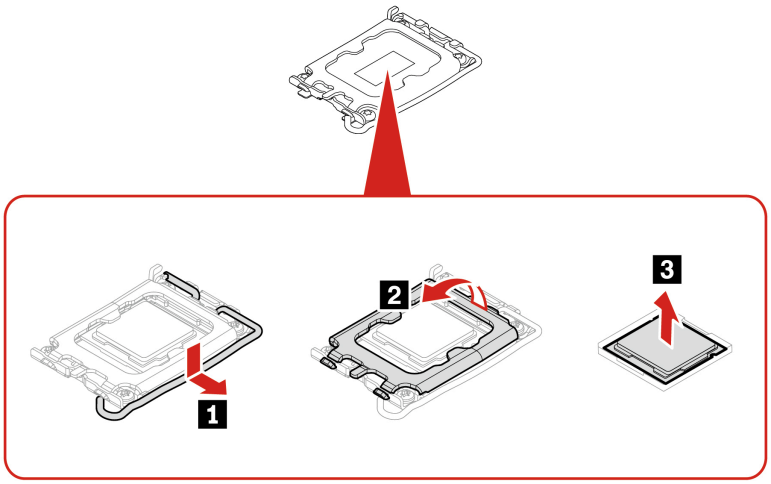

Step 3. Remove old TIMs and apply new TIMs following the instructions in “Handling thermal interface materials” on page 49.

Step 4. Align the CPU with the socket and install the CPU.

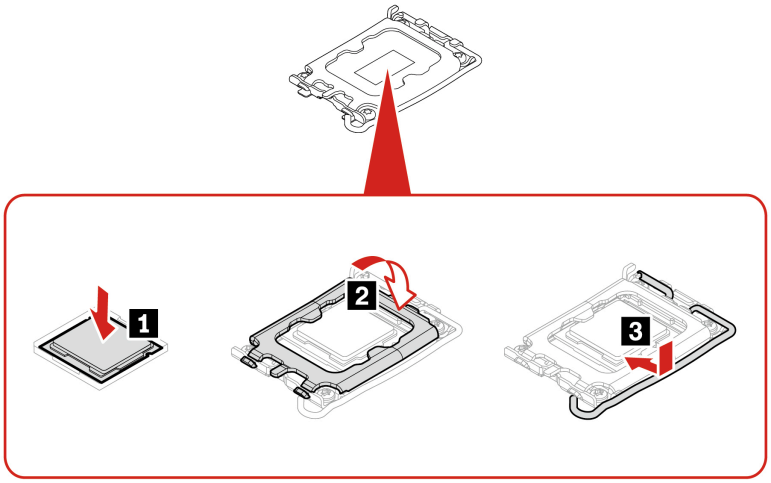

Step 5. Install other removed parts in reverse order.

System board

Before you start, read “Prerequisites for hardware replacement” on page 47.

Important notice for handling the system board

Some components mounted on a system board are very sensitive. Improper handling of a system board can cause damage to those components, and may cause a system malfunction. When handling a system board, follow these precautions:

- Do not drop, bend, or apply any excessive force to the system board.
- Avoid rough handling of any kind.
- Avoid bending a system board and hard pushing to prevent cracking at each BGA (Ball Grid Array) chipset.
- Do not touch the pins on the CPU socket or the gold contacts on the CPU.

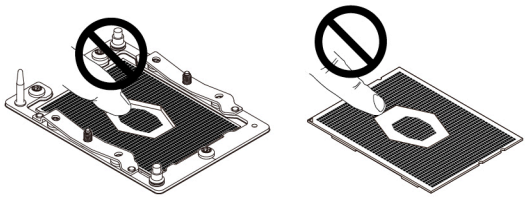

Replacement steps

Step 1. Remove the following parts, if any, in order.

- “Computer cover” on page 50
- “Front bezel” on page 52
- “Drive bay assembly” on page 53
- “2.5G LAN card or USB card” on page 57
- “Front I/O bracket” on page 59
- “Wi-Fi card and Wi-Fi card shield” on page 59
- “M.2 solid-state drive” on page 62
- “Memory module” on page 65
- “Heat sink and fan assembly” on page 67

Step 2. Record the cable routing and cable connections, and then disconnect all cables from the system board. See “System board illustration” on page 48.

Step 3. Remove nine screws and gently lift the system board.

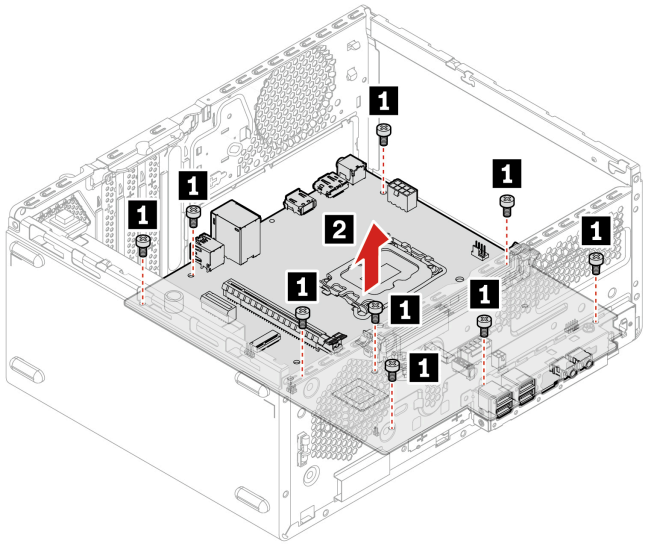

Location	Thread (mm)	Length (mm)	Torque (lbf·in)	Color	Quantity
1	M3	L5	5 ± 0.5	Blue	9

Step 4. Remove old TIMs and apply new TIMs following the instructions in “Handling thermal interface materials” on page 49.

Step 5. Install the system board, reconnect all cables to the system board firmly, and reinstall other removed parts in reverse order.

After replacement

Each computer has its unique SMBIOS (system management BIOS) data stored in the nonvolatile memory on the system board. This information is essential for using or servicing the computer. After you replace the system board, the original SMBIOS data such as the MTM, SN, and brand ID (product name) should be written back into the new system board.

- For service technicians, use the Golden Key U1 tool to write back the product information. Refer to https://support.lenovo.com/solutions/ht102004 for instructions.

  Note: In addition to write the product information, ensure that the latest UEFI BIOS is loaded to the system board before you complete the service action.

- For end users, download and install the latest BIOS package from Lenovo Support Web site to write back the product information. For the MTM and SN information of the product, see “Find the serial number” on page 39.

  CAUTION:
  Take extreme caution when entering the product information. Once written to the system board, the data becomes unalterable. If you are uncertain about any step, consult Lenovo Service before proceeding.

Note for returning a failing system board

The failing system board must be returned with a CPU socket cover to protect the pins during shipping and handling. To install a CPU socket cover:

1. Remove the CPU from the failing system board. Close the CPU retainer and secure it by moving the lever to the locked position.
2. Align the CPU socket cover with the CPU socket, ensuring proper orientation.
3. Install one side of the socket cover into the CPU socket. Press the other side down gently until the socket cover snaps into position.
4. Check that all four corners of the socket cover are fully seated.

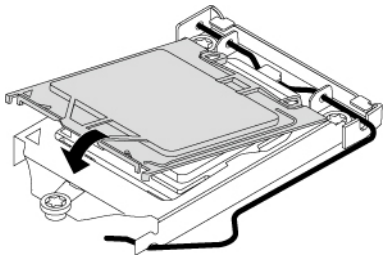

Notes:

- The actual socket cover might look slightly different from the illustration.
- If additional instructions are provided with the replacement part, follow them accordingly.

Rear I/O shield

Before you start, read “Prerequisites for hardware replacement” on page 47.

Replacement steps

Step 1. Remove the following parts, if any, in order.

- “Computer cover” on page 50
- “Front bezel” on page 52
- “Drive bay assembly” on page 53
- “2.5G LAN card or USB card” on page 57
- “Front I/O bracket” on page 59
- “Wi-Fi card and Wi-Fi card shield” on page 59
- “M.2 solid-state drive” on page 62
- “Memory module” on page 65
- “Heat sink and fan assembly” on page 67

Step 2. Record the cable routing and cable connections, disconnect all cables from the system board, and remove the system board. See “System board illustration” on page 48.

Step 3. Push the protrusion of the rear I/O shield inward.

Step 4. Slide the rear I/O shield and remove the rear I/O shield.

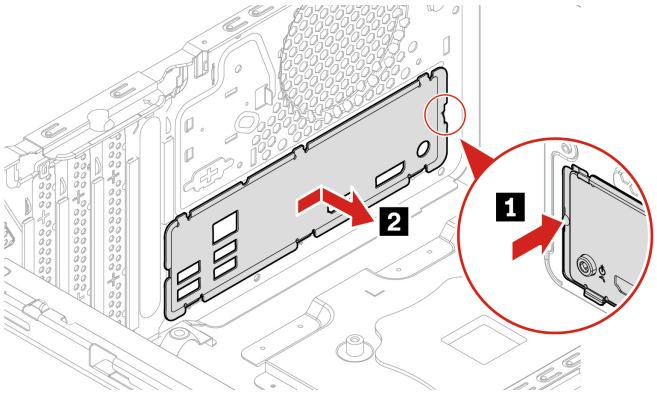

Step 5. Install the rear I/O shield and other removed parts in reverse order.

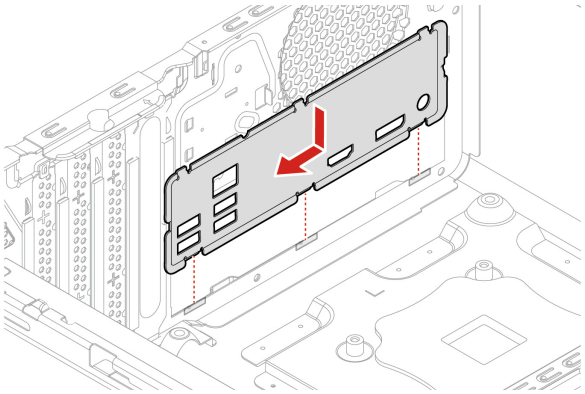

Chapter 5. Supplemental instructions

UEFI BIOS

Enter the UEFI BIOS menu

Turn on or restart the computer. When the logo screen is displayed, press F1 or Fn+F1 to enter the UEFI BIOS menu.

Note: If you have set UEFI BIOS passwords, enter the correct passwords when prompted. You also can select **No** or press Esc to skip the password prompt and enter the UEFI BIOS menu. However, you cannot change the system configurations that are protected by passwords.

Navigate the UEFI BIOS menu

Follow the on-screen instructions to navigate in the UEFI BIOS menu.

The table below introduces the available settings of the UEFI BIOS menu. You can follow the on-screen instruction to navigate in the UEFI BIOS menu.

Note: The UEFI BIOS menu might vary depending on system configurations.

Menu	Introduction
Main	This category provides the general product-related and firmware information including system summary, machine type, product serial number, UUID number, etc.
Devices	This category introduces how to configure various devices such as USB ports and audio controllers.
Advanced	This category provides advanced information about the computer such as the CPU features.
Power	This category introduces power and thermal management solutions.
Security	This category introduces various passwords, locks, and software to protect your computer.
Startup	This category introduces how to set the boot priority order.
Exit	This category introduces how to exit as you prefer.

To explore the detailed settings:

- For computers purchased in mainland China

  You can contact Lenovo Customer Support Center as shown at https://newsupport.lenovo.com.cn/contacts.html.

- For computers purchased outside mainland China

  You can go to Lenovo BIOS Simulator Center https://download.lenovo.com/bsco/index.html to explore the detailed settings by your product name.

  Note: The Lenovo BIOS Simulator Center makes periodic updates of the settings. The UEFI BIOS simulator interface and description of settings might be different from that on your actual user interface.

© Copyright Lenovo 2026

UEFI BIOS passwords

You can set passwords in UEFI (Unified Extensible Firmware Interface) BIOS (Basic Input/Output System) to strengthen the security of your computer.

Password types

You can set a power-on password, supervisor password, or hard disk password in UEFI BIOS to prevent unauthorized access to your computer. However, you are not prompted to enter any UEFI BIOS password when your computer resumes from sleep mode.

- Power-on password

  When a power-on password is set, you are prompted to enter a valid password each time the computer is turned on.

- Supervisor password

  Setting a supervisor password deters unauthorized users from changing configuration settings. If you are responsible for maintaining the configuration settings of several computers, you might want to set a supervisor password.

  When a supervisor password is set, you are prompted to enter a valid password each time you try to enter the BIOS menu.

  If both the power-on password and supervisor password are set, you can enter either password. However, you must use your supervisor password to change any configuration settings.

- Hard disk password (for selected models)

  Setting a hard disk password prevents unauthorized access to the data on the storage drive. When a hard disk password is set, you are prompted to enter a valid password each time you try to access the storage drive.

  Note: After you set a hard disk password, your data on the storage drive is protected even if the storage drive is removed from one computer and installed in another.

Set, change, and remove a password

Before you start, print these instructions.

1. Restart the computer. When the logo screen is displayed, press F1 or Fn+F1.
2. Select **Security**.
3. Depending on the password type, select **Set Supervisor Password**, **Set Power-On Password**, or **Hard Disk Password** and press Enter.
4. Follow the on-screen instructions to set, change, or remove a password.
5. Press F10 or Fn+F10 to save the changes and exit.

You should record your passwords and store them in a safe place. If you forget the passwords, contact a Lenovo-authorized service provider.

Note: If the hard disk password is forgotten, Lenovo cannot remove the password or recover data from the storage drive.

Update the UEFI BIOS

When you install a new program, device driver, or hardware component, you might need to update the UEFI BIOS.

Download and install the latest UEFI BIOS update package by one of the following methods:

From the Vantage app

Follow the instructions to update the UEFI BIOS from the Vantage app.

Step 1. Open the Vantage app, and then click **System Update**.

Step 2. If the latest UEFI BIOS update package is available, follow the on-screen instructions to download and install the package.

From the Lenovo Support Web site

Follow the instructions to update the UEFI BIOS from the Lenovo Support Web site.

For computers purchased in mainland China

Step 1. Go to https://newsupport.lenovo.com.cn.

Step 2. Click **Download drivers and software**, and select or search product.

Step 3. Follow the on-screen instructions to download and install the latest UEFI BIOS update package.

For computers purchased outside mainland China

Step 1. Go to https://pcsupport.lenovo.com and select the entry for your computer.

Step 2. Click **Drivers & Software → Manual Update → BIOS/UEFI**.

Step 3. Follow the on-screen instructions to download and install the latest UEFI BIOS update package.

From the Windows Update

Follow the instructions to update the UEFI BIOS from the Windows Update.

Step 1. Type **Settings** in the Windows search box and press Enter.

Step 2. Click **Windows Update → Check for Updates**.

Step 3. If a BIOS update package appears in your update list, click **Download or Install** to initiate the update.

BIOS recovery

Clear CMOS position

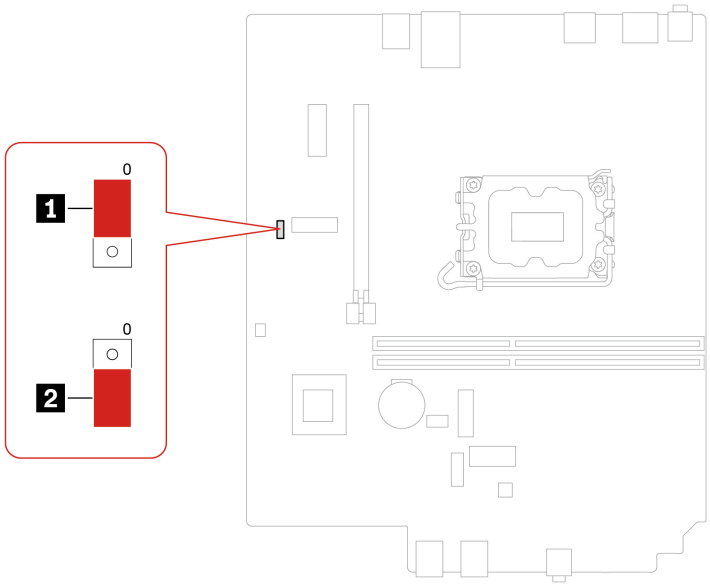

Item	Description	Item	Description
1	Standard position	2	Clear CMOS position

Clear CMOS

Step 1. Remove all media from the drives. Turn off all connected devices and the computer.

Step 2. Unplug all power cords. Remove any parts blocking the Clear CMOS jumper.

Step 3. Move the jumper from the standard to the Clear CMOS position.

Step 4. Reconnect power to the computer and monitor.

Step 5. Power on the system. When the computer beeps, the recovery process begins (which takes a few minutes).

Step 6. Press and hold the power button for around four seconds to power off.

Step 7. Unplug the power cords. Move the jumper back to the standard position.

Step 8. Reinstall all removed parts and reconnect power.

Step 9. Power on the system. When the logo screen is displayed, press F1 or Fn+F1.

Step 10. Check if the BIOS settings are restored to an earlier point.

Recover from a BIOS update failure

Before you start, ensure to save the "IMAGEXXX.ROM" or "IMAGEXXX.cap" file in the BIOS update package to the root directory of your USB drive or disc.

Step 1. Remove all media from the drives. Turn off all connected devices.

Step 2. Insert the prepared USB drive or disc. Turn off the computer.

Step 3. Unplug all power cords. Remove any parts blocking the Clear CMOS jumper.

Step 4. Move the jumper from the standard to the Clear CMOS position.

Step 5. Reconnect power to the computer and monitor.

Step 6. Power on the system. When the computer beeps, the recovery process begins. After a few minutes, the system will automatically shut down upon completion.

Step 7. Unplug the power cords. Move the jumper back to the standard position.

Step 8. Reinstall all removed parts and reconnect power.

Step 9. Power on the system. When the logo screen is displayed, press F1 or Fn+F1.

Step 10. Check if the BIOS settings are restored to an earlier point.

Appendix A. Important notice for Quebec consumers

In regard to section 79.18 of Quebec's Regulation respecting the application of the Consumer Protection Act, Lenovo in no way guarantees the availability of (a) replacement parts; (b) repair services; and (c) information necessary to maintain or repair the goods. For up-to-date information on the technical support and parts available for your purchase, please consult **https://support.lenovo.com/ca/en**.

En ce qui concerne l'article 79.18 du Règlement d'application de la Loi sur la protection du consommateur du Québec, Lenovo ne garantit en aucune façon la disponibilité des éléments suivants :(a) les pièces de rechange; (b) les services de réparation; et (c) les renseignements nécessaires à l'entretien à la réparation du bien. Pour obtenir des renseignements à jour sur le soutien technique et les pièces disponibles pour votre achat, veuillez consulter **https://support.lenovo.com/ca/fr**.

© Copyright Lenovo 2026

Appendix B. Self-help resource

Find more information about your device through the following self-help resources.

Product information

- Product specifications: https://psref.lenovo.com
- Technical specifications for Lenovo workstations: https://thinkstation-specs.com

Lenovo Support resource

- Lenovo PC Technical Support web site: https://pcsupport.lenovo.com. You can obtain the following information and resources:
  - Drivers and software
  - Troubleshoot and diagnose
  - How to's
  - Guides and manuals
  - Warranty lookup
  - Parts lookup
  - Accessories
  - Contact us
  - Repair status check
  - Imaging and security resources
  - Glossary
- Lenovo Support phone numbers: https://pcsupport.lenovo.com/supportphonelist
- Vantage app: Type **vantage** in the Windows search box. You can use the app to:
  - Configure device settings
  - Download and install UEFI BIOS, drivers, and firmware updates
  - Secure your device from outside threats
  - Diagnose hardware problems
  - Check the warranty status of your device
  - Access *User Guide* and helpful articles
- Lenovo communities:
  - Forums: https://forums.lenovo.com
  - Legion Gaming Community: https://gaming.lenovo.com
  - Lenovo EDU Community: https://education.lenovo.com
  - Lenovo Pro Community: https://smbcommunity.lenovo.com
- Troubleshooting tips: https://www.lenovo.com/tips

Service information

- Warranty lookup: https://support.lenovo.com/warranty-lookup. You can check the warranty status of your device.

© Copyright Lenovo 2026

- Repair status check: https://support.lenovo.com/track-repair-status. You can check the repair status of your device by repair ticket, serial number, or IMEI number.
- Parts lookup and purchase: https://support.lenovo.com/parts-lookup. You can find service parts by serial number or machine type.
- Lenovo BIOS Simulation Center: https://download.lenovo.com/bsco/index.html. You can explore the BIOS settings of your device.
- Additional services purchase: https://pcsupport.lenovo.com/warrantyupgrade. You can protect your device with extended warranty, Accidental Damage Protection, Premium Care & Support, and Vantage Smart Performance.

Product documentation

Documentation title	Information included	How to Access
Setup Guide	Initial setup and overview information	• Access the printed version from the product package. • Go to https://pcsupport.lenovo.com and search by the product name or serial number. Then, click **Guides & Manuals**.
User Guide	Instructions, guidance, resources, and contact information	• Scan the QR code in *Setup Guide*. • In Windows Start menu, click **User Guide**. • Type **vantage** in the Windows search box and press Enter. Then, find the *User Guide* in the app. • Go to https://pcsupport.lenovo.com and search by the product name or serial number. Then, click **Guides & Manuals**.
Hardware Maintenance Manual	Hardware diagnostic and replacement information for technicians	Go to https://pcsupport.lenovo.com and Search by the product name or serial number. Then, click **Guides & Manuals**.

Operating system support resource

- Windows help information
  - Type **get help** in the Windows search box
  - Use Windows Search
  - Microsoft Support Web site: https://support.microsoft.com
- Reset or restore Windows
  - Use Lenovo recovery options: https://support.lenovo.com/HowToCreateLenovoRecovery
  - Use Windows recovery options: Go to https://pcsupport.lenovo.com and search by the product name or serial number. Then, navigate to the troubleshooting menu to diagnose the operating system for recovery instructions.

Accessory information

- Purchase accessories: https://www.lenovo.com/accessories
- Service recommendation and accessory configurator: https://smartfind.lenovo.com
- Accessories and option compatibility matrix: https://www.lenovo.com/accessoriesguide

Legal and compliance information

- Product compliance: https://www.lenovo.com/compliance
- Legal information: https://www.lenovo.com/us/en/legal

- Regulatory documentation: Go to https://pcsupport.lenovo.com and search by the product name or serial number. Then, click **Guides & Manuals**.
  - *Safety and Warranty Guide*: Safety, warranty, recycling, and other information
  - *Generic Safety and Compliance Notices*: Compliance, accessibility, RoHS, and other information
  - *Regulatory Notice*: Regulatory notices for wireless modules

Lenovo responsibility

- Accessibility information: https://www.lenovo.com/accessibility
- Environment information: https://www.lenovo.com/us/en/sustainability-operational-impact
- Product security: https://www.lenovo.com/us/en/product-security/landing/

Appendix C. Notices and trademarks

Notices

Lenovo may not offer the products, services, or features discussed in this document in all countries. Consult your local Lenovo representative for information on the products and services currently available in your area. Any reference to a Lenovo product, program, or service is not intended to state or imply that only that Lenovo product, program, or service may be used. Any functionally equivalent product, program, or service that does not infringe any Lenovo intellectual property right may be used instead. However, it is the user's responsibility to evaluate and verify the operation of any other product, program, or service.

Lenovo may have patents or pending patent programs covering subject matter described in this document. The furnishing of this document does not give you any license to these patents. You can send license inquiries, in writing, to:

Lenovo (United States), Inc.
8001 Development Drive
Morrisville, NC 27560
U.S.A.
Attention: Lenovo Director of Licensing

LENOVO PROVIDES THIS PUBLICATION "AS IS" WITHOUT WARRANTY OF ANY KIND, EITHER EXPRESS OR IMPLIED, INCLUDING, BUT NOT LIMITED TO, THE IMPLIED WARRANTIES OF NON-INFRINGEMENT, MERCHANTABILITY OR FITNESS FOR A PARTICULAR PURPOSE. Some jurisdictions do not allow disclaimer of express or implied warranties in certain transactions, therefore, this statement may not apply to you.

Changes are made periodically to the information herein; these changes will be incorporated in new editions of the publication. To provide better service, Lenovo reserves the right to improve and/or modify the products and software programs described in the manuals included with your computer, and the content of the manual, at any time without additional notice.

The software interface and function and hardware configuration described in the manuals included with your computer might not match exactly the actual configuration of the computer that you purchase. For the configuration of the product, refer to the related contract (if any) or product packing list, or consult the distributor for the product sales. Lenovo may use or distribute any of the information you supply in any way it believes appropriate without incurring any obligation to you.

The products described in this document are not intended for use in implantation or other life support applications where malfunction may result in injury or death to persons. The information contained in this document does not affect or change Lenovo product specifications or warranties. Nothing in this document shall operate as an express or implied license or indemnity under the intellectual property rights of Lenovo or third parties. All information contained in this document was obtained in specific environments and is presented as an illustration. The result obtained in other operating environments may vary.

Lenovo may use or distribute any of the information you supply in any way it believes appropriate without incurring any obligation to you.

Any references in this publication to non-Lenovo Web sites are provided for convenience only and do not in any manner serve as an endorsement of those Web sites. The materials at those Web sites are not part of the materials for this Lenovo product, and use of those Web sites is at your own risk.

© Copyright Lenovo 2026

Any performance data contained herein was determined in a controlled environment. Therefore, the result obtained in other operating environments may vary significantly. Some measurements may have been made on development-level systems and there is no guarantee that these measurements will be the same on generally available systems. Furthermore, some measurements may have been estimated through extrapolation. Actual results may vary. Users of this document should verify the applicable data for their specific environment.

This document is copyrighted by Lenovo and is not covered by any open source license, including any Linux® agreement(s) which may accompany software included with this product. Lenovo may update this document at any time without notice.

For the latest information or any questions or comments, contact or visit the Lenovo Web site:

https://pcsupport.lenovo.com

Trademarks

Lenovo, the Lenovo logo, ThinkCentre, and the ThinkCentre logo are trademarks of Lenovo. Linux is the registered trademark of Linus Torvalds in the U.S. and other countries. Microsoft and Windows are trademarks of the Microsoft group of companies. The terms HDMI and HDMI High-Definition Multimedia Interface are trademarks or registered trademarks of HDMI Licensing LLC in the United States and other countries. USB-C is a registered trademark of USB Implementers Forum. Wi-Fi is a registered trademark of Wi-Fi Alliance. All other trademarks are the property of their respective owners.


Lenovo