User Guide

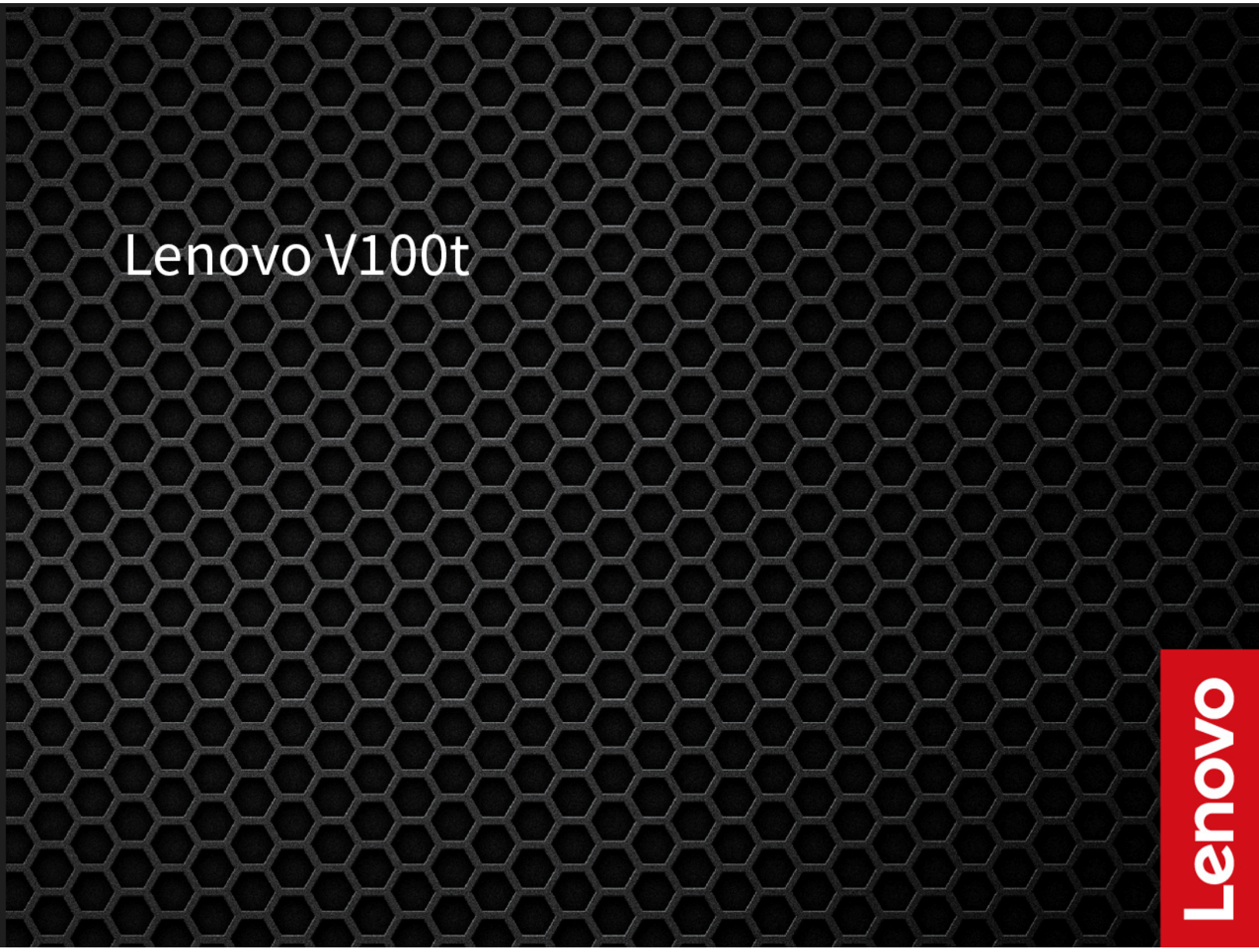

Lenovo V100t

About this documentation

This documentation applies to the Lenovo product models listed below.

Model name	Machine types (MT)
Lenovo V100t	13S8, 13S9, 13SA, 13SB

Before using this documentation and the product it supports, ensure that you read and understand the following:

- *Safety and Warranty Guide*
- *Generic Safety and Compliance Notices*
  - For computers purchased in mainland China: https://iknow.lenovo.com.cn/detail/191404
  - For computers purchased outside mainland China: https://pcsupport.lenovo.com/docs/generic_notices
- *Setup Guide (if provided with your computer)*

Note:

- Illustrations in this documentation may look slightly different from your product model.
- For more compliance information, refer to:
  - For computers purchased in mainland China

    Generic Safety and Compliance Notices at https://iknow.lenovo.com.cn/detail/191404
  - For computers purchased outside mainland China

    Regulatory Notice at https://support.lenovo.com/docs/common_commercial_rn and *Generic Safety and Compliance Notices* at https://www.lenovo.com/compliance
- Depending on the model, some optional accessories, features, and software programs might not be available on your computer.
- Depending on the version of the operating systems and programs, some user interface instructions might not be applicable to your computer.
- Documentation content is subject to change without notice. Lenovo makes constant improvements to the documentation of your computer, including this *User Guide*. To get the latest documentation, go to:
  - For computers purchased in mainland China: https://newsupport.lenovo.com.cn
  - For computers purchased outside mainland China: https://pcsupport.lenovo.com
- Microsoft® makes periodic feature changes to the Windows® operating system through Windows Update. As a result, some information in this documentation might become outdated. Refer to Microsoft resources for the latest information.

First Edition (July 2026)
© Copyright Lenovo 2026.
LIMITED AND RESTRICTED RIGHTS NOTICE: If data or software is delivered pursuant to a General Services Administration “GSA” contract, use, reproduction, or disclosure is subject to restrictions set forth in Contract No. GS-35F-05925.

Contents

About this documentation..... i

Chapter 1 Meet your computer.....1

Front.....1
Rear.....3
Specifications.....5
USB specifications.....6
The Vantage app.....7

Chapter 2 Get started with your computer.....8

Set up the computer.....8
Use a smart cable clip (for selected models).....8
Shut down the computer.....9
Change display settings.....9
Connect to a Bluetooth device (for selected models).....9
Conventional pair.....9
Swift pair.....10
ICE performance mode.....10
Smart power-on feature.....11
Set the power plan.....11
Security.....11
Lock the computer.....11
Use software security solutions.....12
Use BIOS security solutions.....13
UEFI BIOS passwords.....14

Chapter 3 UEFI BIOS.....16

Enter the UEFI BIOS menu.....16
Navigate the UEFI BIOS menu.....16
Enable or disable the ErP LPS compliance mode.....17
Update the UEFI BIOS.....17
From the Vantage app.....18
From the Lenovo Support Web site.....18
From the Windows Update.....18

Chapter 4 Hardware replacement.....19

What is CRU.....19
CRU list.....19
Computer cover.....20
Front bezel.....21
Drive bay assembly.....22
2.5G LAN card or USB card.....23
Hard disk drive.....23
M.2 solid-state drive.....25
Memory module.....27
Power supply assembly.....28

Chapter 5 Help and support.....30

Find your serial number.....30
Diagnose and troubleshoot your computer.....30
Troubleshoot and diagnose at Lenovo Support Web site.....31
Hardware scan.....31
Recover your Windows operating system.....32

Call Lenovo....32
Before you contact Lenovo....32
Self-help resources....33
Purchase accessories or additional services....33
Accessibility features....34

Appendix A Supplementary information....35

Appendix B Important notice for Quebec consumers....36

Appendix C Notices and trademarks....37

Chapter 1 Meet your computer

Front

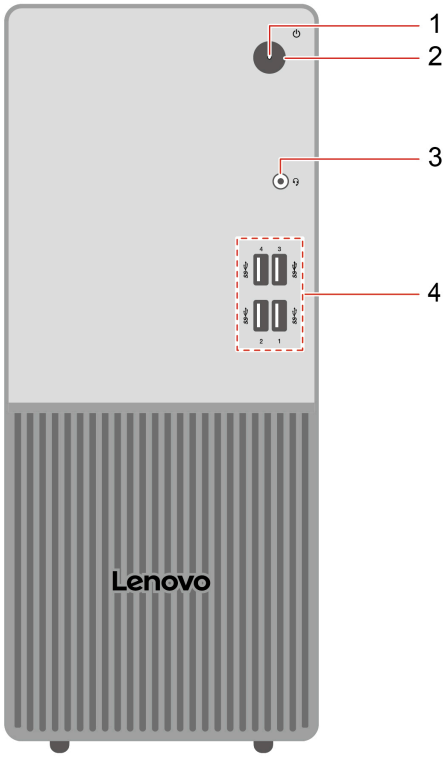

Item	Description	Item	Description
1	Power indicator	2	Power button
3	Headset connector	4	USB-A connectors (USB 5Gbps)

Note:

For more information about the USB connector name update, see Supplementary information on page 35.

Statement on USB transfer rate

Depending on many factors such as the processing capability of the host and peripheral devices, file attributes, and other factors related to system configuration and operating environments, the actual transfer rate using the various USB connectors on this device will vary and will be slower than the data rate listed in the connector name or below for each corresponding device.

USB device	Data rate (Gbit/s)
Thunderbolt 3	40
Thunderbolt 4	40

Power indicator

Show the system status of your computer.

- **Blinking for three times:** The computer is initially connected to power.
- **On:** The computer is starting up or working.
- **Off:** The computer is off or in hibernation mode.
- **Blinking rapidly:** The computer is entering sleep or hibernation mode.
- **Blinking slowly:** The computer is in sleep mode.

Headset connector

The headset connector is compatible with:

- Headphones or earphones with a 3.5mm (0.14 inch), TRS (3-pole) plug
- Headsets with a 3.5mm (0.14 inch), CTIA-compliant or OMTP-compliant TRRS (4-pole) plug

Related topic

USB specifications on page 6

Rear

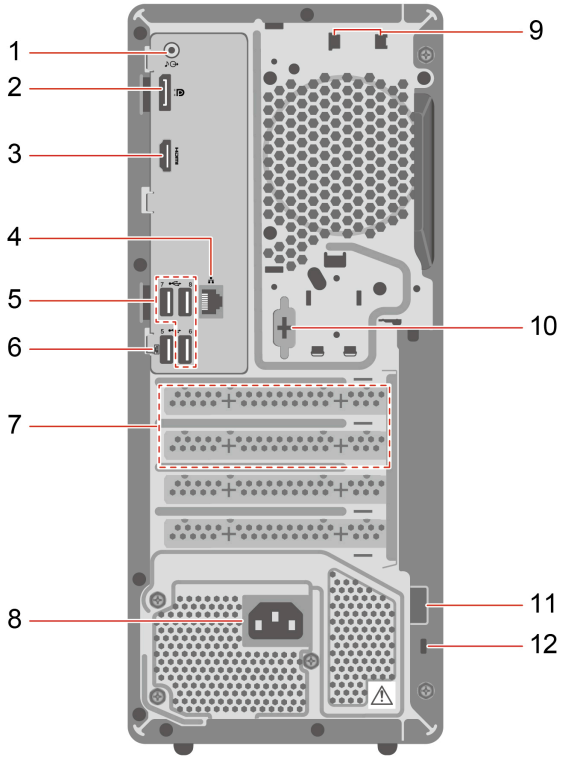

Item	Description	Item	Description
1	Audio line-out connector	2	DisplayPort™ out connector (4K/60Hz)
3	HDMI™ out connector (4K/60Hz)	4	Ethernet connector (1 Gbps)
5	USB-A connectors (Hi-Speed USB)	6	USB-A connector (Hi-Speed USB) with smart power-on feature
7	PCI-Express card area	8	Power cord connector
9	Smart cable clip slots	10	Serial connector*
11	Padlock loop	12	Security-lock slot

* for selected models

Note:

The actual resolution of external displays may vary by the connected display device and the cable being used.

Serial connector

Connect an external modem, a serial printer, or other devices that use a serial connector.

Related topics

- USB specifications on page 6
- Change display settings on page 9
- Smart power-on feature on page 11
- Security on page 11

Specifications

Specification	Description
Dimensions	• Width: 145 mm (5.7 inches) • Height: 340 mm (13.4 inches) • Depth: 294 mm (11.6 inches)
Weight (without packaging)	Maximum configuration as shipped: 4.6 kg (10.1 lb)
Hardware configuration	Type **Device Manager** in the Windows search box and then press Enter. Type the administrator password or provide confirmation, if prompted.
Power supply	• 200-watt automatic voltage-sensing power supply • 400-watt automatic voltage-sensing power supply
Electrical input	• Input voltage: From 100 V ac to 240 V ac • Input frequency: 50/60 Hz
Memory	Memory type: double data rate 5 (DDR5) unbuffered dual in-line memory module (UDIMM) Maximum memory capacity: 32 GB
Storage device	• 3.5-inch hard disk drive* • M.2 solid-state drive To view the storage drive capacity of your computer, type **Disk Management** in the Windows search box and then press Enter. **Note:** The storage drive capacity indicated by the system is less than the nominal capacity.
Video features	• The integrated graphics card supports the following connectors: - DisplayPort out connector - HDMI out connector • The optional discrete graphics card provides an enhanced video experience and extended capabilities.

Specification	Description
Expansion	• Memory slots • M.2 solid-state drive slot • Storage drive bay • PCI Express slots
Network features	• Bluetooth* • Ethernet LAN • Wireless LAN*

* for selected models

Operating environment

Maximum altitude (without pressurization)

- Operating: From -15.2 m (-50 ft) to 3048 m (10 000 ft)
- Storage: From -15.2 m (-50 ft) to 10668 m (35 000 ft)

Temperature

- Operating: From 10°C (50°F) to 35°C (95°F)
- Storage: From -40°C (-40°F) to 60°C (140°F)

Relative humidity

- Operating: 20%-80% (non-condensing)
- Storage: 20%-90% (non-condensing)

USB specifications

Note:

Depending on the model, some USB connectors might not be available on your computer.

Connector name	Description
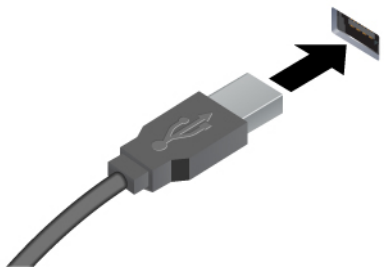 • USB-A connector (Hi-Speed USB) • SS USB-A connector (USB 5Gbps)	Connect USB-A compatible devices, such as a USB-A keyboard, USB-A mouse, USB-A storage device, or USB-A printer.

The Vantage app

The Vantage app is a customized one-stop solution to help you maintain your computer with automated updates and fixes, configure hardware settings, and get personalized support.

To access the Vantage app, type **Vantage** in the Windows search box.

Note:

- The available features vary depending on the computer model.
- The Vantage app makes periodic updates of the features to keep improving your experience with your computer. The description of features might be different from that on your actual user interface. You can download the latest version of Vantage app from Microsoft Store.

The Vantage app enables you to:

- Know the device status easily and customize device settings.
- Download and install UEFI BIOS, firmware, and driver to keep your computer up-to-date.
- Monitor your computer health, and secure your computer against outside threats.
- Scan your computer hardware and diagnose hardware problems.
- Look up warranty status (online).
- Access *User Guide* and helpful articles.

Chapter 2 Get started with your computer

Set up the computer

1. Connect wired or wireless external displays on the computer.
   - **Wired external displays:** Connect the cables of wired external displays to any of the following connectors on the computer:
     - DisplayPort out connector
     - HDMI out connector
   - **Wireless external displays:** Press Windows logo key + K and then select a wireless display to connect. Ensure that both your computer and the wireless display support Miracast®.

   To change display settings, refer to Change display settings on page 9.
2. Connect the following peripheral devices on the computer if any.
   - Keyboard and mouse
   - Dust shield
   - Air deflector
   - Vertical stand
3. Connect the power cord to the power cord connector on the computer and then connect it to a properly-grounded electrical outlet.
4. Press the power button to turn on the computer.
5. Follow the on-screen instructions to complete the setup procedures.
6. Connect to a wired or wireless network.
   - **Wired network:** Connect Ethernet cable of local network to the Ethernet connector on the computer.

     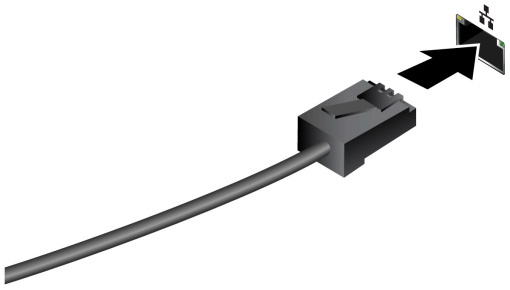
   - **Wireless network:** Click on the bottom right of your display to connect to an available network. Provide required information if needed.

     Note:

     The wireless LAN module on your computer may support different standards. For some countries or regions, use of 802.11ax may be disabled according to local regulations.

Use a smart cable clip (for selected models)

You can purchase a smart cable clip from Lenovo to lock devices (such as the keyboard and the mouse) to your computer.

1. Insert the clip 1 into the cable-lock slot a.
2. Pull the cables you want to lock through the dents in the smart cable clip.
3. Press the clip 2 into the cable-lock slot b until it snaps into position.

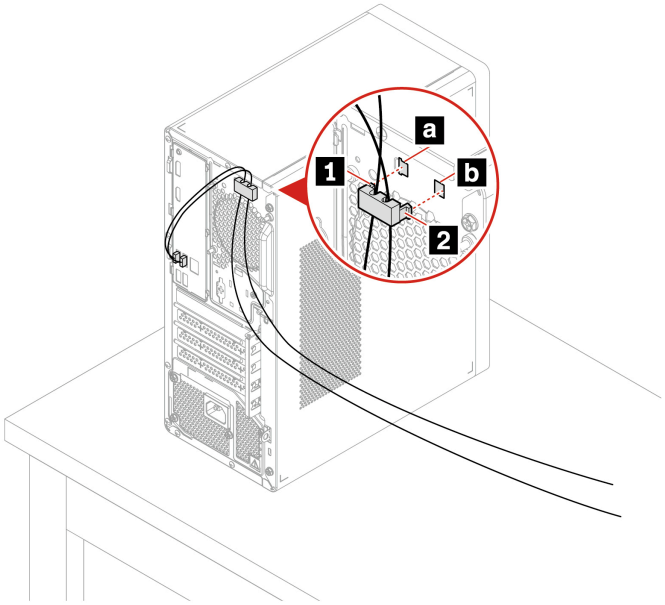

Shut down the computer

To prevent damage to hardware/software systems or loss of data, do not arbitrarily use the power button to shut down the computer. Instead, shut down the computer as follows.

1. Click > > **Shut down**.
2. Wait for the computer to shut down and then turn off the monitor and other peripheral devices.

> **Note:**
>
> After you turn off the system, please wait at least 20 seconds before turning the computer back on to avoid hardware faults.

Change display settings

1. Right-click a blank area on the desktop and select display settings.
2. Select the display that you want to configure and change display settings of your preference.

Connect to a Bluetooth device (for selected models)

You can connect all types of Bluetooth-enabled devices to your computer, such as a keyboard, a mouse, a smartphone, or speakers. To ensure successful connection, place the devices at most 10 meters (33 feet) from the computer.

Conventional pair

This topic helps you connect to a Bluetooth device by conventional pair.

1. Type **Bluetooth** in the Windows search box and then press Enter.
2. Turn on both the Bluetooth on your computer and the Bluetooth device. Make sure the device is discoverable.
3. Select the device when it is displayed on the **Add a device** list, and then follow the on-screen instructions.

> **Note:**
>
> If the Bluetooth connection failed, do the following:
>
> 1. Type **Device Manager** in the Windows search box and then press Enter.
> 2. Locate the Bluetooth adapter. Right-click and select **Update driver**.
> 3. Select **Search automatically for drivers**, and then follow the on-screen instructions.

Swift pair

This topic helps you connect to a Bluetooth device by swift pair.

If your Bluetooth device supports swift pair, do the following:

1. Enable swift pair notification on Bluetooth settings page.
2. Turn on both the Bluetooth on your computer and the Bluetooth device. Make sure the device is discoverable.
3. Click **Connect** when a swift pair notification appears on your computer.

> **Note:**
>
> If the Bluetooth connection failed, do the following:
>
> 1. Type **Device Manager** in the Windows search box and then press Enter.
> 2. Locate the Bluetooth adapter. Right-click and select **Update driver**.
> 3. Select **Search automatically for drivers**, and then follow the on-screen instructions.

ICE performance mode

The ICE performance mode helps you adjust the acoustic and thermal performance of your computer. Three options are available:

- **Balance mode**: The computer works at the balance mode with balanced noise and better performance.
- **Performance mode** (default setting): The computer works at the best performance with normal acoustic level.

  > **Note:**
  >
  > The term “best” only refers to the best effect among different settings of the product itself.

- **Full Speed**: All fans in the computer will run at full speed.

Change the ICE performance mode

To change the ICE performance mode:

1. Restart the computer. When the logo screen is displayed, press F1 or Fn+F1.
2. Select **Power** > **Intelligent Cooling** and press Enter.
3. Select **Performance Mode** and press Enter.
4. Set the performance mode as desired.

5. Press F10 or Fn+F10 to save the changes and exit.

Smart power-on feature

The smart power-on feature helps you start up or wake up the computer from the hibernation mode simply by pressing Alt+P.

> **Note:**
>
> Ensure that the keyboard is connected to a USB connector supporting the smart power-on feature.

Enable or disable the smart power-on feature

To enable or disable the smart power-on feature:

1. Restart the computer. When the logo screen is displayed, press F1 or Fn+F1.
2. Select **Power** > **Smart Power On** and press Enter.
3. Enable or disable the feature as desired.
4. Press F10 or Fn+F10 to save the changes and exit.

Set the power plan

For ENERGY STAR® compliant computers, the following power plan takes effect when your computers have been idle for a specified duration:

- Turn off the display: After 10 minutes
- Put the computer to sleep: After 25 minutes

To awaken the computer from Sleep mode, press any key on your keyboard.

To set the power plan:

1. Type **Power Options** in the Windows search box and then press Enter.
2. Choose or customize a power plan of your preference.

Security

This computer offers a wealth of security measures to protect both the device and data safety.

Lock the computer

> **Note:**
>
> Lenovo makes no comments, judgments, or warranties about the function, quality, or performance of the locking device and security feature. You can purchase computer locks from Lenovo.

Padlock

Locking the computer cover through a padlock prevents unauthorized access to the inside of your computer.

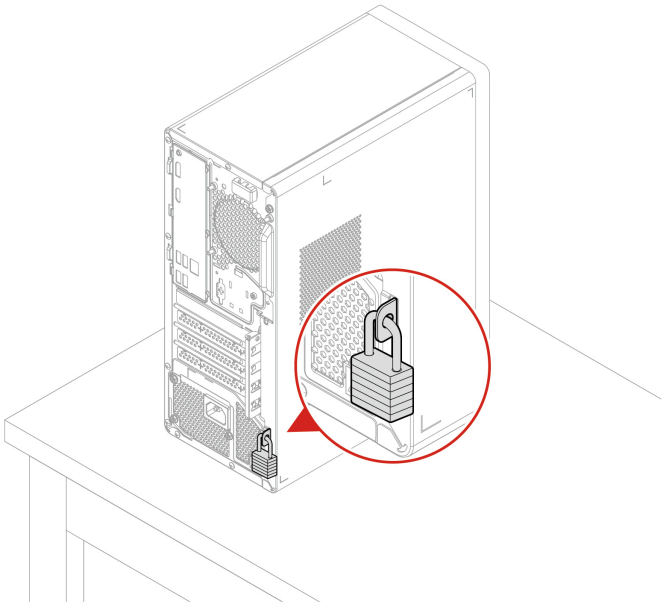

Security lock

Lock your computer to a desk, table, or other fixtures through a security lock.

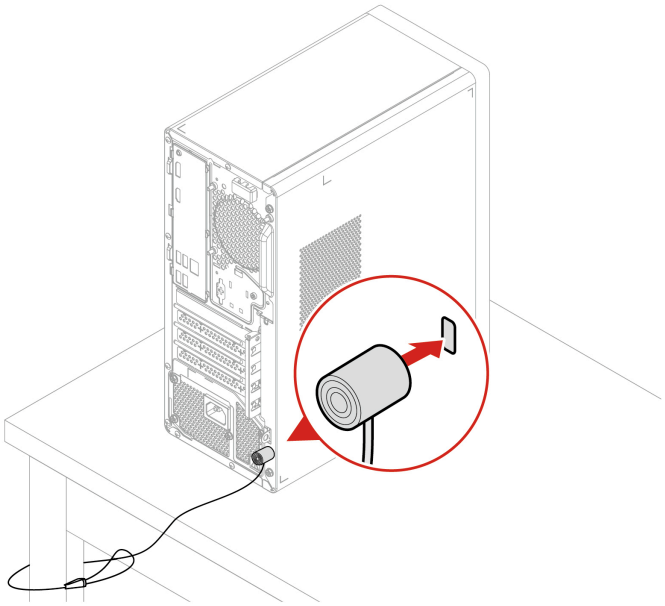

Use software security solutions

The following software solution helps secure your computer and information.

Windows Security

Windows Security is a software built-in to the operating system. It continually scans for malicious software, viruses, and other security threats. Besides, Windows updates are downloaded

automatically to help keep your computer safe. Windows Security also enables you to manage tools including firewall, account protection, application and browser control, and so on.

> **Note:**
>
> For more information about how to use the software solution, refer to its help system.

Use BIOS security solutions

This section provides BIOS solutions to secure your computer and information.

Erase all storage drive data (for selected models)

It is recommended that you erase all storage drive data before recycling a storage drive or the computer.

To erase all storage drive data:

1. Set a hard disk password for the storage drive you will recycle. See UEFI BIOS passwords on page 14.
2. Restart the computer. When the logo screen is displayed, press F1 or Fn+F1.
3. Select **Security** > **Storage Password** > **Security Erase HDD Data** and press Enter.
4. Select the storage drive you will recycle and press Enter.
5. A message is displayed, prompting you to confirm the operation. Select **Yes** and press Enter. The erasing process begins.

   > **Note:**
   >
   > During the erasing process, the power button and the keyboard are disabled.

6. After the erasing process is completed, a message is displayed, prompting you to reset the system. Select **Continue**.

   > **Note:**
   >
   > Depending on the storage drive capacity, the erasing process will take half an hour to three hours.

7. After the resetting process is completed, one of the following will happen:
   - If the data on the system storage drive is erased, you will be prompted that no operating system is available.
   - If the data on the non-system storage drive is erased, the computer restarts automatically.

Intel BIOS guard

The Intel® BIOS Guard module cryptographically verifies all BIOS updates. This hardware-based security helps prevent software and malware attacks on the computers BIOS.

Smart USB Protection

The Smart USB Protection function is a security function that helps prevent data from being copied from the computer to USB storage devices connected to the computer. You can set the Smart USB Protection function to one of the following modes:

- **Disabled** (default setting): You can use the USB storage devices without limitation.
- **Read Only**: You cannot copy data from the computer to the USB storage devices. However, you can access data on the USB storage devices.

- **No Access**: You cannot access the USB storage devices from the computer.

To configure the Smart USB Protection function:

1. Restart the computer. When the logo screen is displayed, press F1 or Fn+F1.
2. Select **Security** > **Smart USB Protection** and press Enter.
3. Select the desired setting and press Enter.
4. Press F10 or Fn+F10 to save the changes and exit.

UEFI BIOS passwords

You can set passwords in UEFI (Unified Extensible Firmware Interface) BIOS (Basic Input/Output System) to strengthen the security of your computer.

Password types

You can set a power-on password, supervisor password, or hard disk password in UEFI BIOS to prevent unauthorized access to your computer. However, you are not prompted to enter any UEFI BIOS password when your computer resumes from sleep mode.

- Power-on password

  When a power-on password is set, you are prompted to enter a valid password each time the computer is turned on.
- Supervisor password

  Setting a supervisor password deters unauthorized users from changing configuration settings. If you are responsible for maintaining the configuration settings of several computers, you might want to set a supervisor password.

  When a supervisor password is set, you are prompted to enter a valid password each time you try to enter the BIOS menu.

  If both the power-on password and supervisor password are set, you can enter either password. However, you must use your supervisor password to change any configuration settings.
- Hard disk password (for selected models)

  Setting a hard disk password prevents unauthorized access to the data on the storage drive. When a hard disk password is set, you are prompted to enter a valid password each time you try to access the storage drive.

  > **Note:**
  >
  > After you set a hard disk password, your data on the storage drive is protected even if the storage drive is removed from one computer and installed in another.

Set, change, and remove a password

Before you start, print these instructions.

1. Restart the computer. When the logo screen is displayed, press F1 or Fn+F1.
2. Select **Security**.
3. Depending on the password type, select **Set Supervisor Password**, **Set Power-On Password**, or **Hard Disk Password** and press Enter.
4. Follow the on-screen instructions to set, change, or remove a password.
5. Press F10 or Fn+F10 to save the changes and exit.

You should record your passwords and store them in a safe place. If you forget the passwords, contact a Lenovo-authorized service provider.

Note:

If the hard disk password is forgotten, Lenovo cannot remove the password or recover data from the storage drive.

Chapter 3 UEFI BIOS

Enter the UEFI BIOS menu

Turn on or restart the computer. When the logo screen is displayed, press F1 or Fn+F1 to enter the UEFI BIOS menu.

Note:

If you have set UEFI BIOS passwords, enter the correct passwords when prompted. You also can select **No** or press Esc to skip the password prompt and enter the UEFI BIOS menu. However, you cannot change the system configurations that are protected by passwords.

Navigate the UEFI BIOS menu

Follow the on-screen instructions to navigate in the UEFI BIOS menu.

The table below introduces the available settings of the UEFI BIOS menu. You can follow the on-screen instruction to navigate in the UEFI BIOS menu.

Note:

The UEFI BIOS menu might vary depending on system configurations.

Menu	Introduction
Main	This category provides the general product-related and firmware information including system summary, machine type, product serial number, UUID number, etc.
Devices	This category introduces how to configure various devices such as USB ports and audio controllers.
Advanced	This category provides advanced information about the computer such as the CPU features.
Power	This category introduces power and thermal management solutions.
Security	This category introduces various passwords, locks, and software to protect your computer.
Startup	This category introduces how to set the boot priority order.
Exit	This category introduces how to exit as you prefer.

To explore the detailed settings:

- For computers purchased in mainland China

  You can contact Lenovo Customer Support Center as shown at https://newsupport.lenovo.com.cn/contacts.html.
- For computers purchased outside mainland China

  You can go to Lenovo BIOS Simulator Center https://download.lenovo.com/bsco/index.html to explore the detailed settings by your product name.

  > **Note:**
  >
  > The Lenovo BIOS Simulator Center makes periodic updates of the settings. The UEFI BIOS simulator interface and description of settings might be different from that on your actual user interface.

Enable or disable the ErP LPS compliance mode

Lenovo computers meet the eco-design requirements of the ErP Lot 3 regulation. Follow the instruction to enable or disable the ErP LPS compliance mode.

For more information about the eco-design requirements, go to: https://www.lenovo.com/us/en/compliance/eco-declaration.

You can enable the ErP LPS compliance mode to reduce the consumption of electricity when the computer is off. To enable or disable the ErP LPS compliance mode:

1. Restart the computer. When the logo screen is displayed, press F1 or Fn+F1.
2. Select **Power** > **Enhanced Power Saving Mode** and press Enter.
3. Enable or disable the feature as desired.

   > **Note:**
   >
   > Please note that when the Enhanced Power Saving Mode is disabled, the power consumption might be increased when the computer is off.
4. Press F10 or Fn+F10 to save the changes and exit.

When the ErP LPS compliance mode is enabled, you can wake up the computer by doing one of the following:

- Press the power button.
- Enable the Wake Up on Alarm feature to make the computer wake up at a set time.

To meet the off mode requirement of ErP compliance, you need to disable the Fast Startup function.

1. Go to **Control Panel** and view by large icons or small icons.
2. Click **Power Options** > **Choose what the power buttons do** > **Change settings that are currently unavailable**.
3. Clear the **Turn on fast startup (recommended)** option from the **Shutdown settings** list.

Update the UEFI BIOS

When you install a new program, device driver, or hardware component, you might need to update the UEFI BIOS.

Download and install the latest UEFI BIOS update package by one of the following methods:

From the Vantage app

Follow the instructions to update the UEFI BIOS from the Vantage app.

1. Open the Vantage app, and then click **System Update**.
2. If the latest UEFI BIOS update package is available, follow the on-screen instructions to download and install the package.

From the Lenovo Support Web site

Follow the instructions to update the UEFI BIOS from the Lenovo Support Web site.

For computers purchased in mainland China

1. Go to https://newsupport.lenovo.com.cn.
2. Click **Download drivers and software**, and select or search product.
3. Follow the on-screen instructions to download and install the latest UEFI BIOS update package.

For computers purchased outside mainland China

1. Go to https://pcsupport.lenovo.com and select the entry for your computer.
2. Click **Drivers & Software** > **Manual Update** > **BIOS/UEFI**.
3. Follow the on-screen instructions to download and install the latest UEFI BIOS update package.

From the Windows Update

Follow the instructions to update the UEFI BIOS from the Windows Update.

1. Type **Settings** in the Windows search box and press Enter.
2. Click **Windows Update** > **Check for Updates**.
3. If a BIOS update package appears in your update list, click **Download or Install** to initiate the update.

Chapter 4 Hardware replacement

What is CRU

Customer Replaceable Units (CRUs) are parts that can be replaced by the customer. Lenovo computers contain the following types of CRUs:

- **Self-service CRUs:** Refer to parts that can be replaced easily by customer themselves or by trained service technicians at an additional cost.
- **Optional-service CRUs:** Refer to parts that can be replaced by customers with a greater skill level. Trained service technicians can also provide service to replace the parts under the type of warranty designated for the customer's machine.

If you intend on installing the CRU, Lenovo will ship the CRU to you. CRU information and replacement instructions are shipped with your product and are available from Lenovo at any time upon request. You might be required to return the defective part that is replaced by the CRU. When return is required: (1) return instructions, a prepaid shipping label, and a container will be included with the replacement CRU; and (2) you might be charged for the replacement CRU if Lenovo does not receive the defective CRU within thirty (30) days of your receipt of the replacement CRU. For full details, see the Lenovo Limited Warranty documentation at:

https://www.lenovo.com/warranty/llw_02

CRU list

The following is the CRU list of your computer.

Self-service CRUs

- Computer cover
- Front bezel
- Keyboard*
- Memory module
- Mouse*
- Power cord

Optional-service CRUs

- 2242 M.2 solid-state drive*
- 2280 M.2 solid-state drive*
- 2.5G LAN card*
- Hard disk drive*
- Power supply assembly
- USB card*

* for selected models

Computer cover

Prerequisite

Before you start, read *Generic Safety and Compliance Notices*, and print the following instructions.



Before you open the computer cover, turn off the computer and wait several minutes until the computer is cool.

For access, do the following:

1. Remove any media from the drives and turn off all connected devices and the computer.
2. Disconnect all power cords from electrical outlets and disconnect all cables from the computer.
3. Unlock any locking device that secures the computer cover.
4. Lay down the computer to place the computer cover facing up.

Removal steps

1. Remove the two screws which secure the computer cover to the chassis, one screw at each edge of the chassis. Find screw specification like torque in the following screw table.

Screw (quantity)	Color	Torque
6-32 x 5 mm, Nickel coated (2)	Silver	5 ± 0.5 lbf·in

2. Pull the computer cover to remove it.

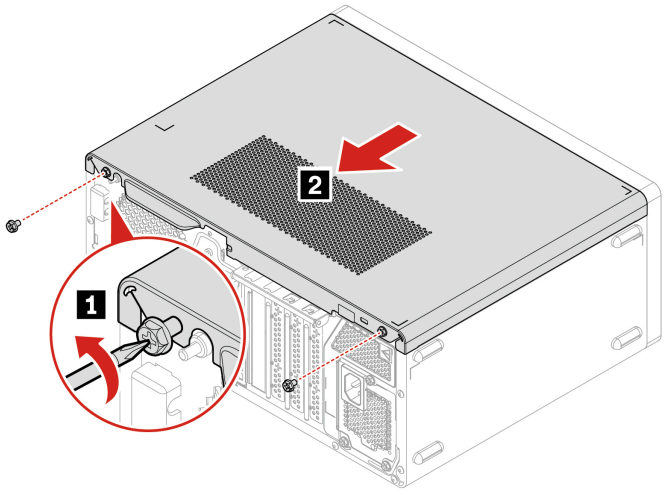

Note:

If a locking device is available, use it to lock the computer after installing the computer cover.

Front bezel

Prerequisite

Before you start, read *Generic Safety and Compliance Notices*, and print the following instructions.

For access, remove the computer cover. See Computer cover on page 20.

Removal steps

Release three elastic hooks from the top of the front bezel.

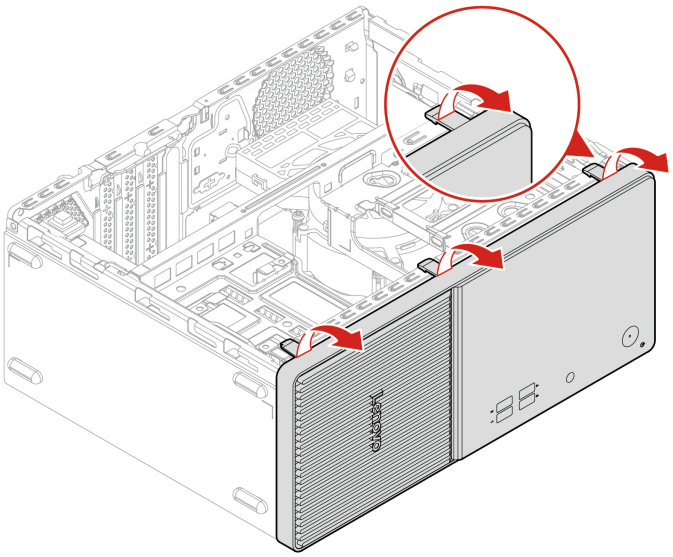

Installation steps

There are three swivel hooks at the bottom of the front bezel, and three corresponding hook slots at the bottom of the front panel.

1. Insert the three swivel hooks to each hook slot.
2. Pivot the front bezel inwards to install it to the chassis.

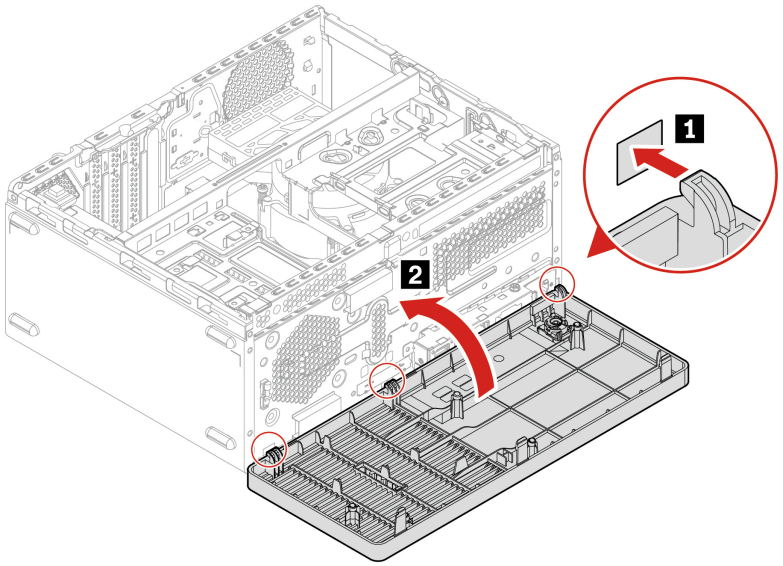

Drive bay assembly

Prerequisite

Before you start, read *Generic Safety and Compliance Notices*, and print the following instructions.

For access, remove these parts in order, if any:

- Computer cover on page 20
- Front bezel on page 21

Removal steps

1. Push up on the latch which secures the drive bay assembly to the chassis to release it.
2. Pull out and pivot the drive bay assembly upward to remove it.

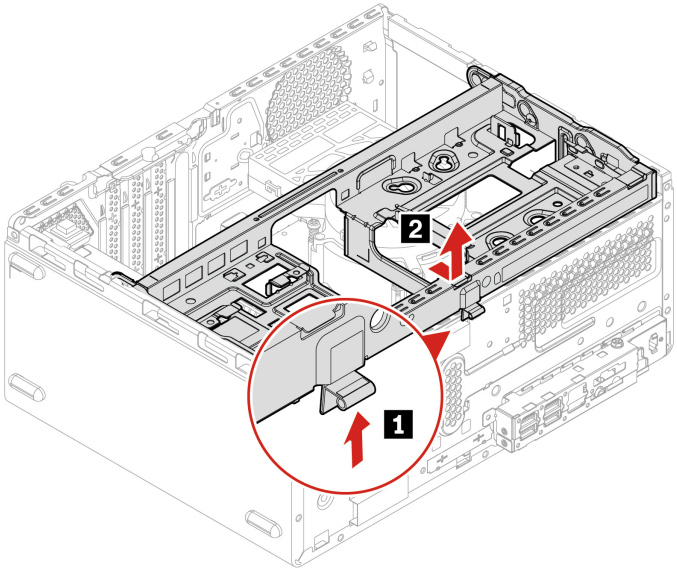

2.5G LAN card or USB card

Prerequisite

Before you start, read *Generic Safety and Compliance Notices*, and print the following instructions.

For access, remove these parts in order, if any:

- Computer cover on page 20
- Front bezel on page 21
- Drive bay assembly on page 22

Removal steps

1. Pivot the PCIe latch outwards.
2. Gently pull the card straight out of the PCIe slot. If the card is seated tightly, gently move it from side to side until it is released.

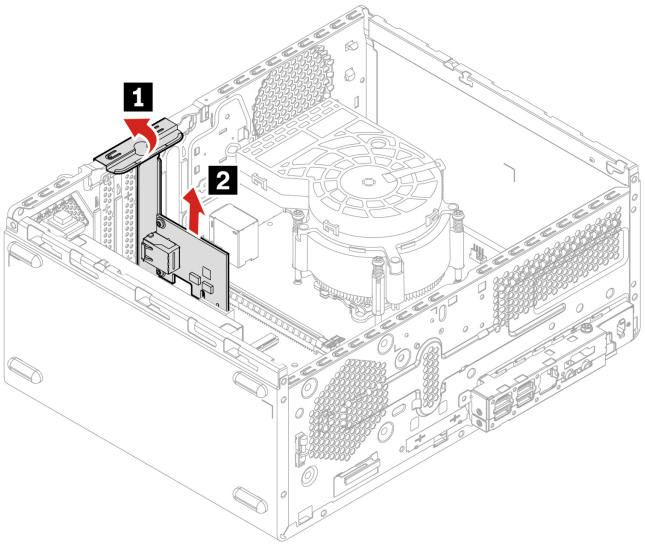

Hard disk drive

Prerequisite

Before you start, read *Generic Safety and Compliance Notices*, and print the following instructions.

Attention:

The internal storage drive is sensitive. Inappropriate handling might cause damage and permanent loss of data. When handling the internal storage drive, observe the following guidelines:

- Replace the internal storage drive only for repair. The internal storage drive is not designed for frequent changes or replacement.
- Before replacing the internal storage drive, make a backup copy of all the data that you want to keep.
- Do not touch the contact edge of the internal storage drive. Otherwise, the internal storage drive might get damaged.
- Do not apply pressure to the internal storage drive.
- Do not make the internal storage drive subject to physical shocks or vibration. Put the internal storage drive on a soft material, such as cloth, to absorb physical shocks.

For access, do the following:

1. Remove these parts in order, if any:
   - Computer cover on page 20
   - Front bezel on page 21
   - Drive bay assembly on page 22
2. Disconnect the signal cable and the power cable from the storage drive.

Removal steps

1. Remove the four screws which secure the hard disk drive to the drive bay assembly, two screws at each side of the hard disk drive. Find screw specification like torque in the following screw table.

Screw (quantity)	Color	Torque
M4 x 4.7 + 6.9 mm, Nickel coated (4)	Black	5 ± 0.5 lbf·in

2. Remove the hard disk drive.

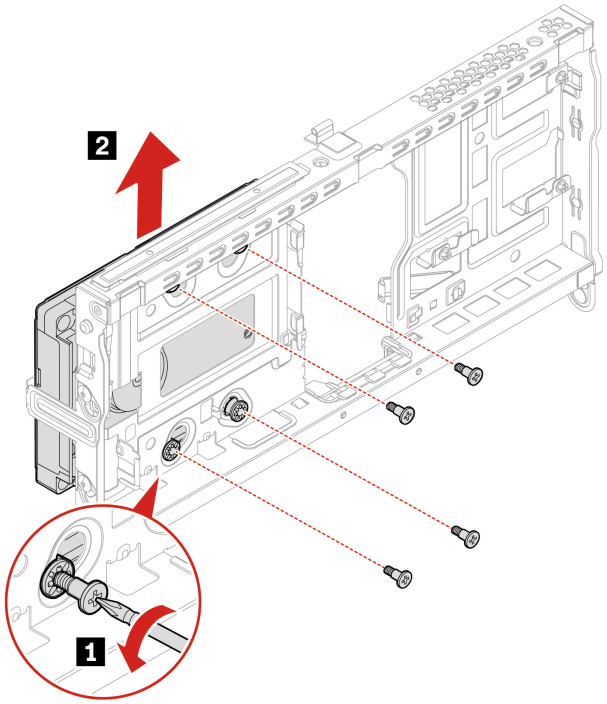

M.2 solid-state drive

Prerequisite

Before you start, read *Generic Safety and Compliance Notices*, and print the following instructions.

The M.2 solid-state drive might be very hot. Before you open the computer cover, turn off the computer and wait several minutes until the computer is cool.

Attention:

The internal storage drive is sensitive. Inappropriate handling might cause damage and permanent loss of data. When handling the internal storage drive, observe the following guidelines:

- Replace the internal storage drive only for repair. The internal storage drive is not designed for frequent changes or replacement.
- Before replacing the internal storage drive, make a backup copy of all the data that you want to keep.
- Do not touch the contact edge of the internal storage drive. Otherwise, the internal storage drive might get damaged.
- Do not apply pressure to the internal storage drive.
- Do not make the internal storage drive subject to physical shocks or vibration. Put the internal storage drive on a soft material, such as cloth, to absorb physical shocks.

For access, remove these parts in order:

- Computer cover on page 20

- Front bezel on page 21

Removal steps

- **For 2280 M.2 solid-state drive:**
  1. Remove the screw which secures the M.2 solid-state drive to the system board. Find screw specification like torque in the following screw table.

Screw (quantity)	Color	Torque
M2 x 4 mm, Zn coated (1)	Black	1.5 ± 0.5 lbf·in

  2. Remove the M.2 solid-state drive and thermal pad (if any) depending on the computer model.

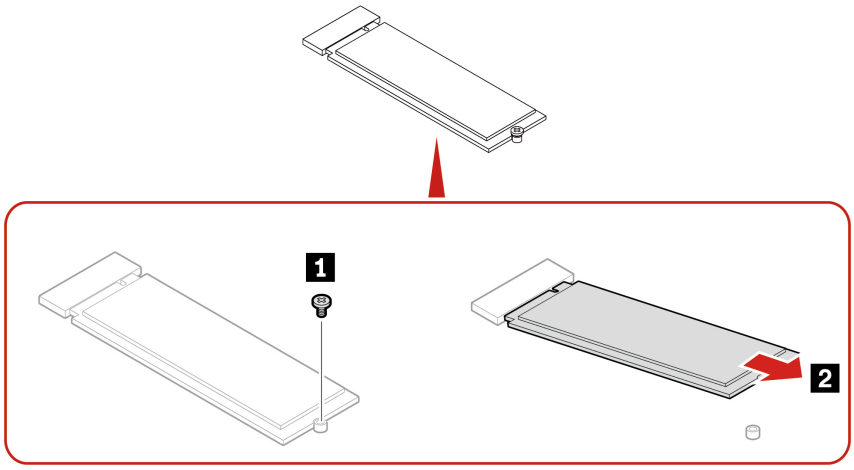

- **For 2242 M.2 solid-state drive:**
  1. Pull the locking latch upward to release the M.2 solid-state drive.
  2. Remove the M.2 solid-state drive and thermal pad (if any) depending on the computer model.

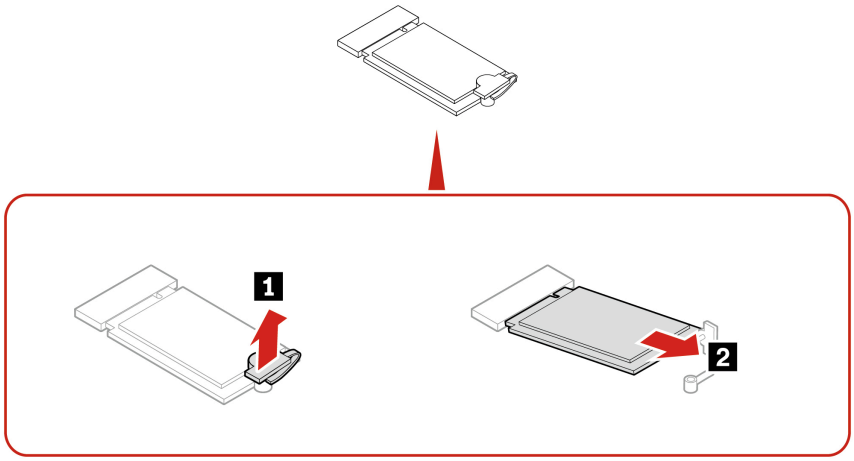

Note:

Remove the film that covers the thermal pad (if any) when installing the M.2 solid-state drive and thermal pad.

Memory module

Prerequisite

Before you start, read *Generic Safety and Compliance Notices*, and print the following instructions.

Ensure that you follow the installation rules shown in the following illustration.

This computer supports two DIMM slots. DIMM 1 slot is located closer to the CPU of the computer. If you have only one memory module, install it in DIMM 1 slot. If you have two memory modules, install them in both slots.

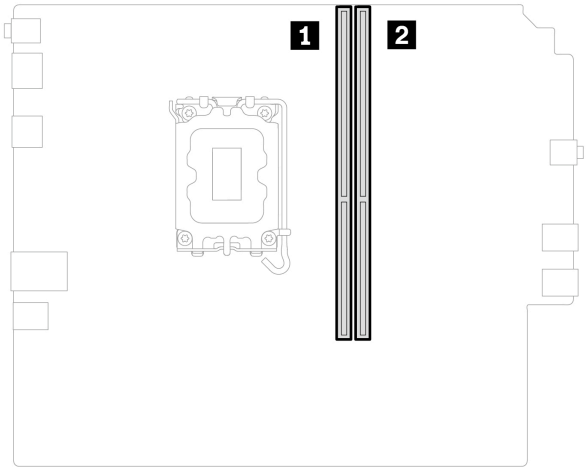

For access, remove these parts in order:

- Computer cover on page 20
- Front bezel on page 21

Removal steps

1. Open the two retaining clips.
2. Gently pull the memory module out of the memory slot.

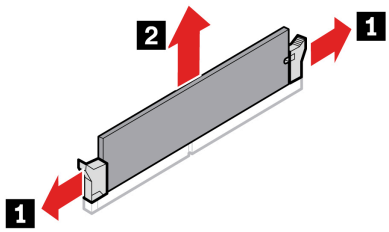

Installation steps

Align the memory module to the slot and press down on both ends until the latches are fully engaged with a click.

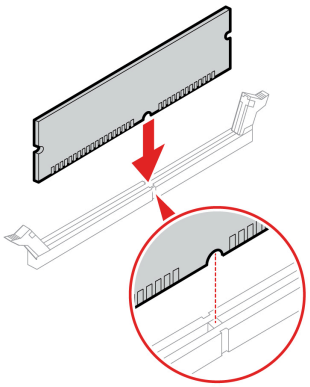

Power supply assembly

Prerequisite

Before you start, read *Generic Safety and Compliance Notices*, and print the following instructions.

Although there are no moving parts in the computer after the power cord has been disconnected, the following warnings are required for your safety.



Keep fingers and other parts of your body away from hazardous, moving parts. If you suffer an injury, seek medical care immediately. Never remove the cover on a power supply or any part that has the following label attached.



Hazardous voltage, current, and energy levels are present inside any component that has this label attached. There are no serviceable parts inside these components. If you suspect a problem with one of these parts, contact a service technician.

For access, do the following:

1. Remove these parts in order:
   - Computer cover on page 20
   - Front bezel on page 21
2. Disconnect the power supply assembly cables from the system board.

Removal steps

1. Remove the three screws which secure the power supply assembly to the chassis. Find screw specification like torque in the following screw table.

Screw (quantity)	Color	Torque
6-32 x 5 mm, Nickel coated (3)	Silver	5 ± 0.5 lbf·in

2. Press the retaining clip from inside of the chassis.
3. Push the power supply assembly inwards to remove it.

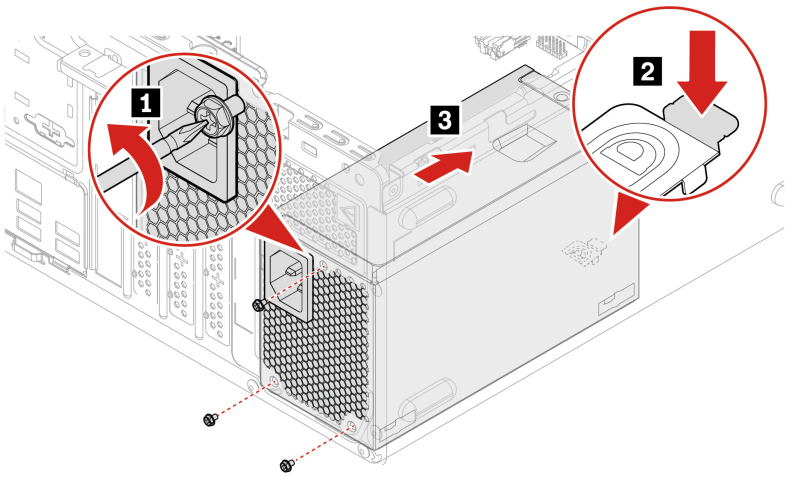
1
2
3

Chapter 5 Help and support

Find your serial number

This topic helps you find computer serial number.

You can find your serial number via:

- **Dashboard** or **Device** in the **Vantage** app
- The upper right corner of the top cover of your computer (shown as below illustration)

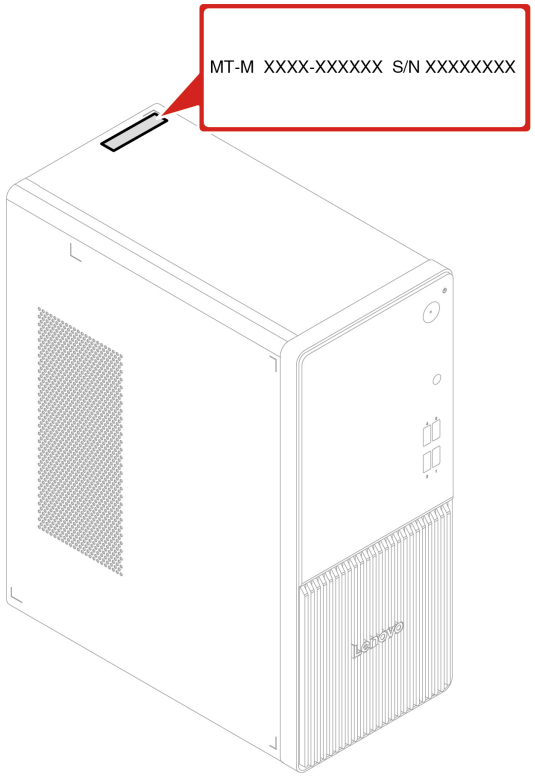

Diagnose and troubleshoot your computer

This section provides introduction to a set of diagnostics and troubleshooting tools at Lenovo Support Web site and the Vantage app. They can help you diagnose common software and hardware issues.

The following table lists these diagnostics tools and the recommended conditions for each tool.

Diagnostics tool	**Recommended scenario**
Troubleshoot and diagnose at Lenovo Support Web site	You want to have an online troubleshooting or scan of hardware and drivers on your computer.

Diagnostics tool	Recommended scenario
Hardware scan	• Your computer is installed with the Vantage app. • You want to perform basic examinations of the hardware components.

Troubleshoot and diagnose at Lenovo Support Web site

Lenovo provides two different diagnosing solutions to help you identify and resolve problems on your computer.

For computers purchased in mainland China

1. Go to https://newsupport.lenovo.com.cn/.
2. Enter the troubleshooting section and find the question you are encountering.

For computers purchased outside mainland China

1. Go to https://www.pcsupport.lenovo.com/ and enter your product name in the search box.
2. Click **Troubleshoot & Diagnose** and select the option that fits your need.

Note:

- Before launching any automatic diagnosing process, a pop-up window will be prompted to install Lenovo Service Bridge. Lenovo Service Bridge helps to connect your computer with Lenovo diagnosing tools.
- Lenovo Support Web site makes periodic updates of the sections to keep improving your experience with your computer. The Web site interface and descriptions of sections might be different from that on your actual interface.

- If you are unaware of what problem your computer goes with, it is recommended that you select **Easy** and follow on-screen instructions to get your firmware updated and obtain the hardware status.
- If you have identified the problem on your computer, you can select **Custom** and follow on-screen instructions to resolve the problem.

If solutions can not resolve problems on your computer, you can follow on-screen instructions to submit an e-ticket or contact Lenovo for professional assistance.

Hardware scan

Hardware scan is an effective hardware testing tool to help you identify existing hardware issues.

To run the Hardware scan:

1. Type **Vantage** in the Windows search box and then press Enter.
2. Click **Hardware scan** or **Support** > **Hardware scan**.
3. Select **QUICK SCAN** or **CUSTOMIZE** and then follow the on-screen instructions to run the hardware scan.

Note:

- The Quick Scan tool contains a pre-selected suite of tests that performs basic examinations of the hardware components found in the system. The Customize tool enables you to select one or several hardware components to perform the examinations.
- Before selecting **QUICK SCAN**, click **Refresh Modules** to ensure that the list of hardware components is the components currently available for the computer.

4. If any hardware failure is detected, the result varies depending on the warranty status and varies by country or region. Follow the on-screen instructions to resolve the issue.

Recover your Windows operating system

When you encounter some unexpected issues with your operating system, you can choose to recover your operating system by yourself or call Lenovo Customer Support Center.

Note:

Microsoft constantly makes updates to the Windows operating system. Before installing a particular Windows version, check the compatibility list for the Windows version. For details, go to https://support.lenovo.com/us/en/solutions/ht512575.

For computers purchased in mainland China

Go to https://iknow.lenovo.com.cn/detail/199198_1.html.

For computers purchased outside mainland China

To recover your operating system to...	See.
Factory defaults	Refer to the instructions in https://support.lenovo.com/HowToCreateLenovoRecovery
A previous system point	Refer to the instructions in Popular Topics: https://support.lenovo.com/solutions/ht118590

Call Lenovo

If you have tried to correct the problem yourself and still need help, you can call Lenovo Customer Support Center.

Before you contact Lenovo

Prepare the needed information before you contact Lenovo.

1. Record the problem symptoms and details:
   - What is the problem? Is it continuous or intermittent?
   - Any error message or error code?
   - What operating system are you using? Which version?
   - Which software applications were running at the time of the problem?

- Can the problem be reproduced? If so, how?

2. Record the system information:
   - Product name
   - Machine type and serial number.

Self-help resources

Use the following self-help resources to learn more about the computer and troubleshoot problems.

Resources	**How to access?**
Lenovo Support Web Site	• For computers purchased in mainland China https://newsupport.lenovo.com.cn • For computers purchased outside mainland China https://pcsupport.lenovo.com
Tips	• For computers purchased in mainland China https://iknow.lenovo.com.cn • For computers purchased outside mainland China https://www.lenovo.com/tips
Lenovo Community	• For computers purchased in mainland China https://iknow.lenovo.com.cn • For computers purchased outside mainland China https://forums.lenovo.com
Accessibility information (for computers purchased outside China)	https://www.lenovo.com/accessibility
Windows help information	• Open the Start menu and click **Get Help** or **Tips**. • Use Windows Search. • Microsoft support Web site: https://support.microsoft.com

Purchase accessories or additional services

This topic provides instructions on how to purchase accessories or additional services.

Accessories

Lenovo has a number of hardware accessories and upgrades to help expand the functionalities of your computer. Accessories include memory modules, storage devices, network cards, power adapters, keyboards, mice, and so on.

To shop at Lenovo, go to:

- For computers purchased in mainland China

  https://www.lenovo.com.cn
- For computers purchased outside mainland China

  https://www.lenovo.com/accessories

Additional services

During and after the warranty period, you can purchase additional services from Lenovo at:

- For computers purchased in mainland China

  https://newsupport.lenovo.com.cn
- For computers purchased outside mainland China

  https://pcsupport.lenovo.com/warrantyupgrade

Service availability and service names might vary by country or region.

Accessibility features

Lenovo is committed to making information technology accessible to everyone, including individuals with hearing, vision, mobility, cognitive, or speech disabilities. To get the most up-to-date and detailed accessibility features information for the product, go to **https://support.lenovo.com/docs/product_accessibility_features**.

Appendix A Supplementary information

This section contains the notice for USB connector name update. The USB Implementers Forum published a revision of the guideline for USB connector names in September, 2022. Lenovo follows the revised guideline and updates USB connector names accordingly. You can refer to the table below for naming update details.

Notice for USB connector name update

Current name	**Previous name**
USB-A connector (Hi-Speed USB)	USB-A 2.0 connector
USB-A connector (USB 5Gbps)	USB-A 3.2 Gen 1 connector
USB-A connector (USB 10Gbps)	USB-A 3.2 Gen 2 connector
USB-A connector (USB 5Gbps, Always On USB)	Always on USB-A 3.2 Gen 1 connector
USB-A connector (USB 10Gbps, Always On USB)	Always on USB-A 3.2 Gen 2 connector
USB-C connector (USB 5Gbps)	USB-C (3.2 Gen 1) connector
USB-C connector (USB 10Gbps)	USB-C (3.2 Gen 2) connector
USB-C connector (USB 20Gbps)	USB 3.2 Gen 2x2
USB-C connector (USB4 20Gbps)	USB 4 Gen 2x2
USB-C connector (USB4 40Gbps)	USB-C (USB 4) connector
USB-C connector (Thunderbolt 3)	USB-C (Thunderbolt 3) connector
USB-C connector (Thunderbolt 4)	USB-C (Thunderbolt 4) connector

Appendix B Important notice for Quebec consumers

In regard to section 79.18 of Quebec's Regulation respecting the application of the Consumer Protection Act, Lenovo in no way guarantees the availability of (a) replacement parts; (b) repair services; and (c) information necessary to maintain or repair the goods. For up-to-date information on the technical support and parts available for your purchase, please consult **https://support.lenovo.com/ca/en**.

En ce qui concerne l'article 79.18 du Règlement d'application de la Loi sur la protection du consommateur du Québec, Lenovo ne garantit en aucune façon la disponibilité des éléments suivants: (a) les pièces de rechange; (b) les services de réparation; et (c) les renseignements nécessaires à l'entretien à la réparation du bien. Pour obtenir des renseignements à jour sur le soutien technique et les pièces disponibles pour votre achat, veuillez consulter **https://support.lenovo.com/ca/fr**.

Appendix C Notices and trademarks

Notices

Lenovo may not offer the products, services, or features discussed in this document in all countries. Consult your local Lenovo representative for information on the products and services currently available in your area. Any reference to a Lenovo product, program, or service is not intended to state or imply that only that Lenovo product, program, or service may be used. Any functionally equivalent product, program, or service that does not infringe any Lenovo intellectual property right may be used instead. However, it is the user's responsibility to evaluate and verify the operation of any other product, program, or service.

Lenovo may have patents or pending patent programs covering subject matter described in this document. The furnishing of this document does not give you any license to these patents. You can send license inquiries, in writing, to:

Lenovo (United States), Inc.
8001 Development Drive
Morrisville, NC 27560
U.S.A.
Attention: Lenovo Director of Licensing

LENOVO PROVIDES THIS PUBLICATION "AS IS" WITHOUT WARRANTY OF ANY KIND, EITHER EXPRESS OR IMPLIED, INCLUDING, BUT NOT LIMITED TO, THE IMPLIED WARRANTIES OF NON-INFRINGEMENT, MERCHANTABILITY OR FITNESS FOR A PARTICULAR PURPOSE. Some jurisdictions do not allow disclaimer of express or implied warranties in certain transactions, therefore, this statement may not apply to you.

Changes are made periodically to the information herein; these changes will be incorporated in new editions of the publication. To provide better service, Lenovo reserves the right to improve and/or modify the products and software programs described in the manuals included with your computer, and the content of the manual, at any time without additional notice.

The software interface and function and hardware configuration described in the manuals included with your computer might not match exactly the actual configuration of the computer that you purchase. For the configuration of the product, refer to the related contract (if any) or product packing list, or consult the distributor for the product sales. Lenovo may use or distribute any of the information you supply in any way it believes appropriate without incurring any obligation to you.

The products described in this document are not intended for use in implantation or other life support applications where malfunction may result in injury or death to persons. The information contained in this document does not affect or change Lenovo product specifications or warranties. Nothing in this document shall operate as an express or implied license or indemnity under the intellectual property rights of Lenovo or third parties. All information contained in this document was obtained in specific environments and is presented as an illustration. The result obtained in other operating environments may vary.

Lenovo may use or distribute any of the information you supply in any way it believes appropriate without incurring any obligation to you.

Any references in this publication to non-Lenovo Web sites are provided for convenience only and do not in any manner serve as an endorsement of those Web sites. The materials at those Web sites are not part of the materials for this Lenovo product, and use of those Web sites is at your own risk.

Any performance data contained herein was determined in a controlled environment. Therefore, the result obtained in other operating environments may vary significantly. Some measurements may have been made on development-level systems and there is no guarantee that these measurements will be the same on generally available systems. Furthermore, some measurements may have been

estimated through extrapolation. Actual results may vary. Users of this document should verify the applicable data for their specific environment.

This document is copyrighted by Lenovo and is not covered by any open source license, including any Linux® agreement(s) which may accompany software included with this product. Lenovo may update this document at any time without notice.

For the latest information or any questions or comments, contact or visit the Lenovo Web site:

- For computers purchased in mainland China

  https://newsupport.lenovo.com.cn
- For computers purchased outside mainland China

  https://pcsupport.lenovo.com

Trademarks

Lenovo and Lenovo logo are trademarks of Lenovo. Thunderbolt is a trademark of Intel Corporation or its subsidiaries in the U.S. and/or other countries. Linux is the registered trademark of Linus Torvalds in the U.S. and other countries. Microsoft and Windows are trademarks of the Microsoft group of companies. DisplayPort is a trademark of the Video Electronics Standards Association. The terms HDMI and HDMI High-Definition Multimedia Interface are trademarks or registered trademarks of HDMI Licensing LLC in the United States and other countries. USB-C is a registered trademark of USB Implementers Forum. Wi-Fi and Miracast are registered trademarks of Wi-Fi Alliance. All other trademarks are the property of their respective owners.