# INSTALLATION INSTRUCTIONS

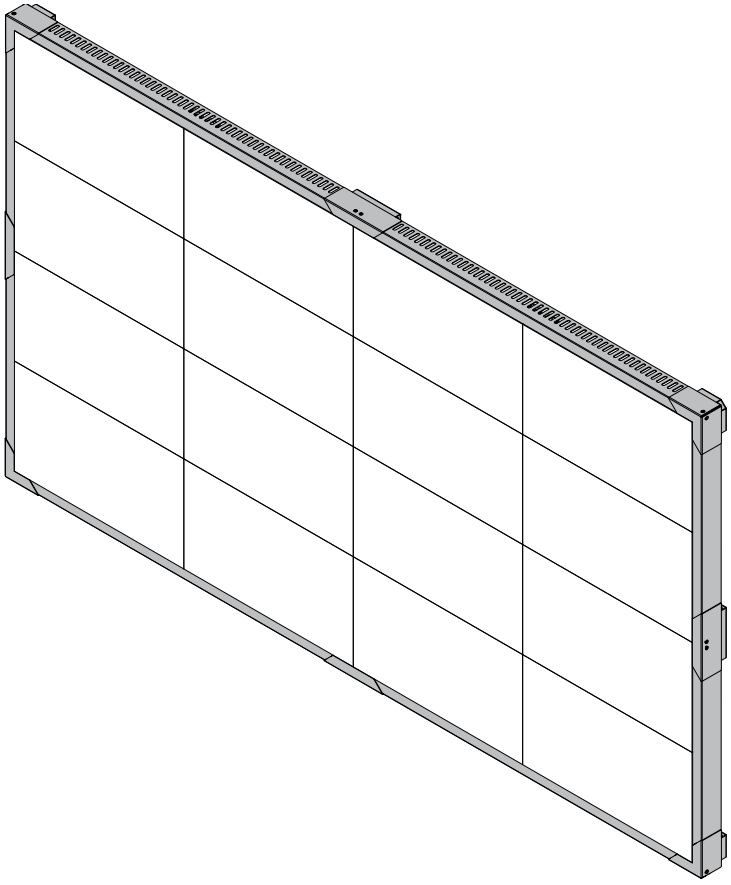

# DvLED Trim Kits

CHIEF®

A brand of legrand®

**DVAVC250/500/600/1000/1200**
**DVASC250/337/500/675/1000**
**DVATOCK-1/4, DVATICK-1, DVATSC-1**

## DISCLAIMER

Legrand | AV and its affiliated corporations and subsidiaries (collectively “Legrand | AV”), intend to make this manual accurate and complete. However, Legrand | AV makes no claim that the information contained herein covers all details, conditions or variations, nor does it provide for every possible contingency in connection with the installation or use of this product. The information contained in this document is subject to change without notice or obligation of any kind. Legrand | AV makes no representation of warranty, expressed or implied, regarding the information contained herein. Legrand | AV assumes no responsibility for accuracy, completeness or sufficiency of the information contained in this document.

Chief® is a registered trademark of Legrand AV Inc.

## DEFINITIONS

**MOUNTING SYSTEM:** A MOUNTING SYSTEM is the primary Chief product to which an accessory and/or component is attached.

**ACCESSORY:** AN ACCESSORY is the secondary Chief product which is attached to a primary Chief product, and may have a component attached or setting on it.

**COMPONENT:** A COMPONENT is an audiovisual item designed to be attached or resting on an accessory or mounting system such as a video camera, CPU, screen, display, projector, etc.

**WARNING:** A WARNING alerts you to the possibility of serious injury or death if you do not follow the instructions.

**CAUTION:** A CAUTION alerts you to the possibility of damage or destruction of equipment if you do not follow the corresponding instructions.

## IMPORTANT SAFETY INSTRUCTIONS

**WARNING:** Failure to read, thoroughly understand, and follow all instructions can result in serious personal injury, damage to equipment, or voiding of factory warranty! It is the installer’s responsibility to make sure all mounting systems are properly assembled and installed using the instructions provided.

**WARNING:** Failure to provide adequate structural strength for this mounting system can result in serious personal injury or damage to equipment! It is the installer’s responsibility to make sure the structure to which this mounting system is attached can support five times the combined weight of all equipment. Reinforce the structure as required before installing the mounting system.

**WARNING:** Use this accessory only for its intended use as described in these instructions. Do not use attachments not recommended by the manufacturer.

**WARNING:** Never operate this mounting system if it is damaged. Return the mounting system to a service center for examination and repair.

**WARNING:** Do not use this mounting system outdoors.

**--SAVE THESE INSTRUCTIONS--**

## DIMENSIONS

### 4 x 4 Configuration

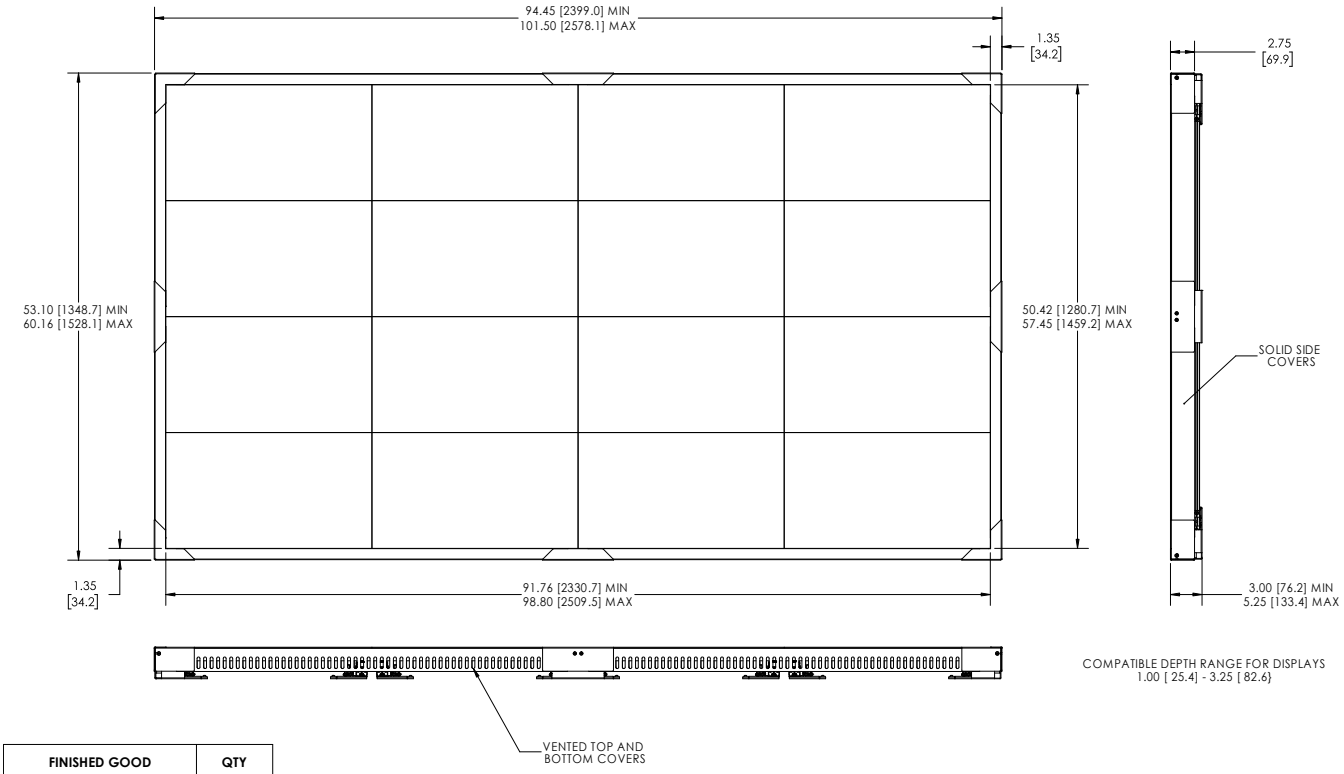


| FINISHED GOOD | QTY |
|---|---|
| DVATOCK-4 | 1 |
| DVATSC-1 | 4 |
| DVAVC1200 | 2 |
| | 2 |

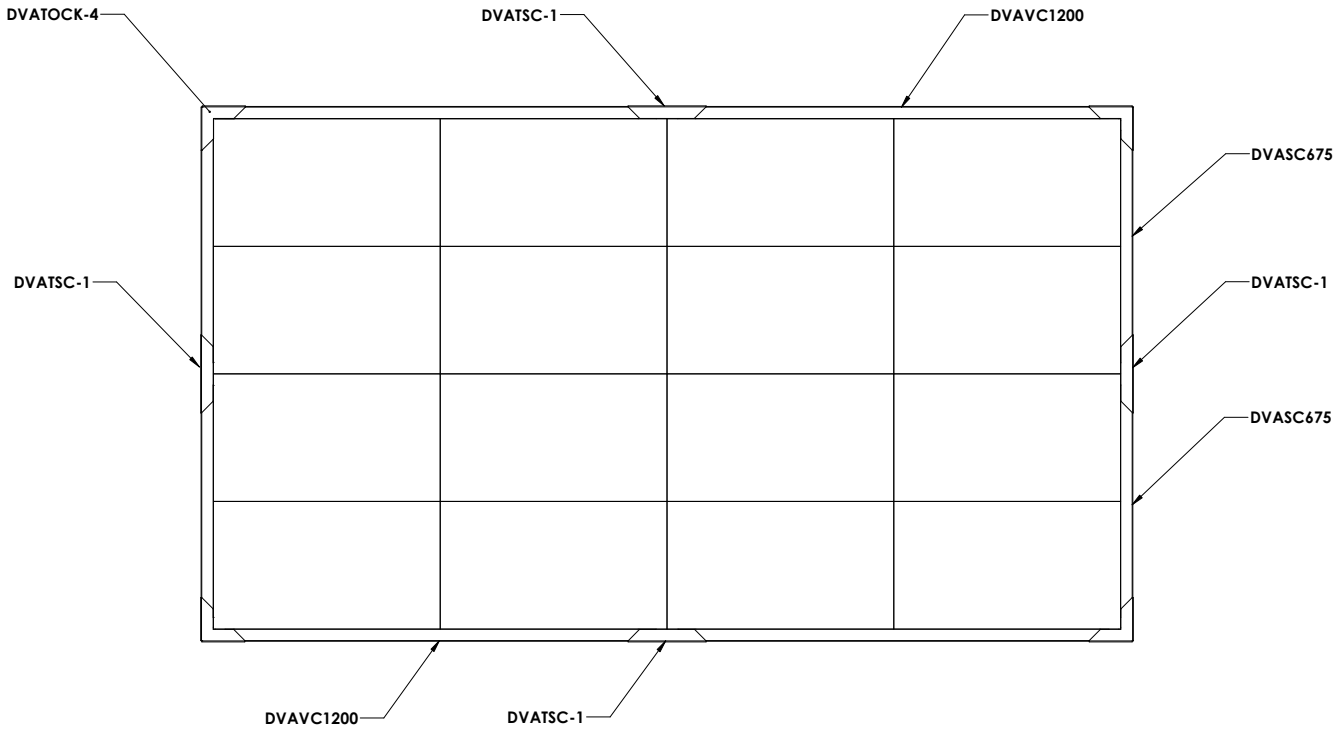


DIMENSIONS: INCHES
[MILLIMETERS]

## DIMENSIONS (continued)

### 5 x 5 Configuration

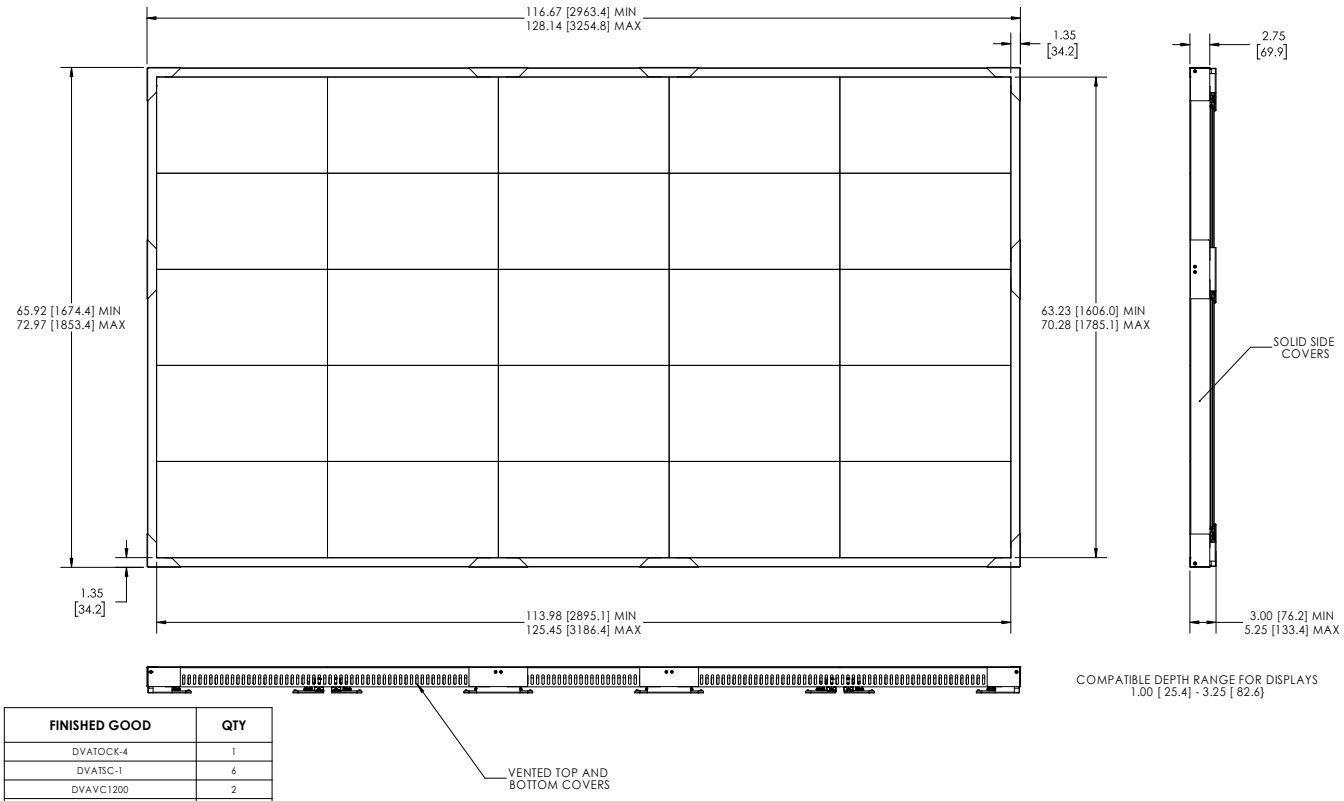


| FINISHED GOOD | QTY |
|---|---|
| DVATOCK-4 | 1 |
| DVATSC-1 | 6 |
| DVAVC1200 | 2 |
| DVAVC600 | 1 |
| DVASC1000 | 1 |
| | 1 |

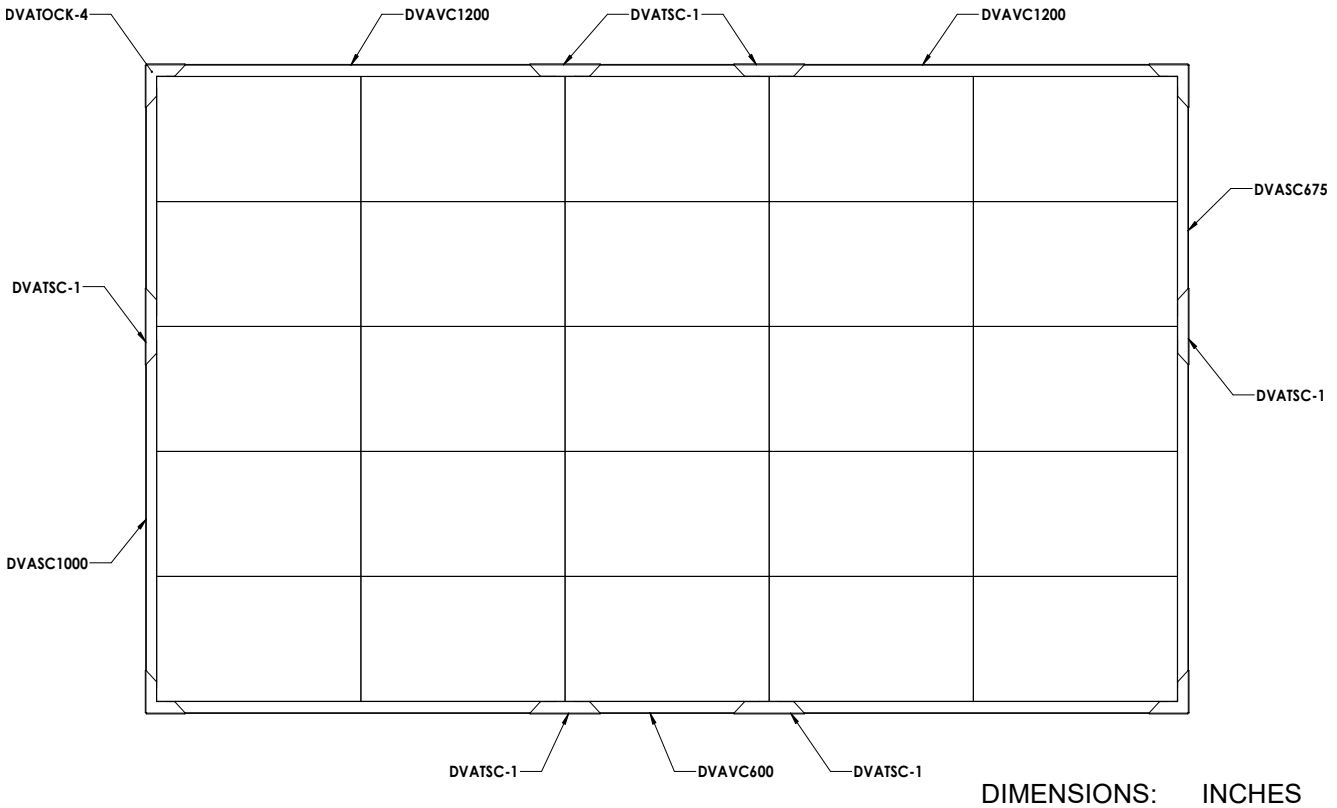


DIMENSIONS: INCHES
[MILLIMETERS]

## DIMENSIONS (continued)

### 6 x 6 Configuration

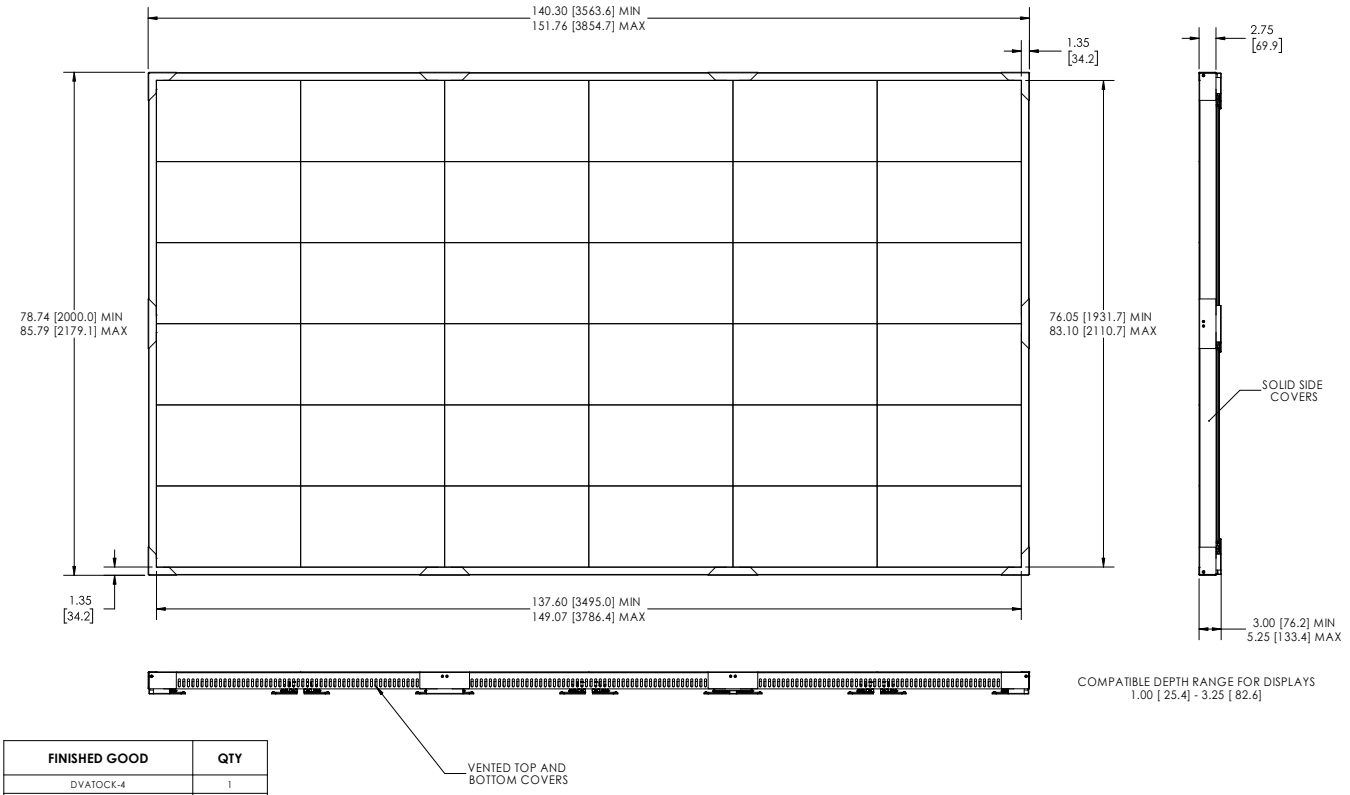


| FINISHED GOOD | QTY |
|---|---|
| DVATOCK-4 | 1 |
| DVATSC-1 | 6 |
| DVAVC1200 | 3 |
| | 2 |

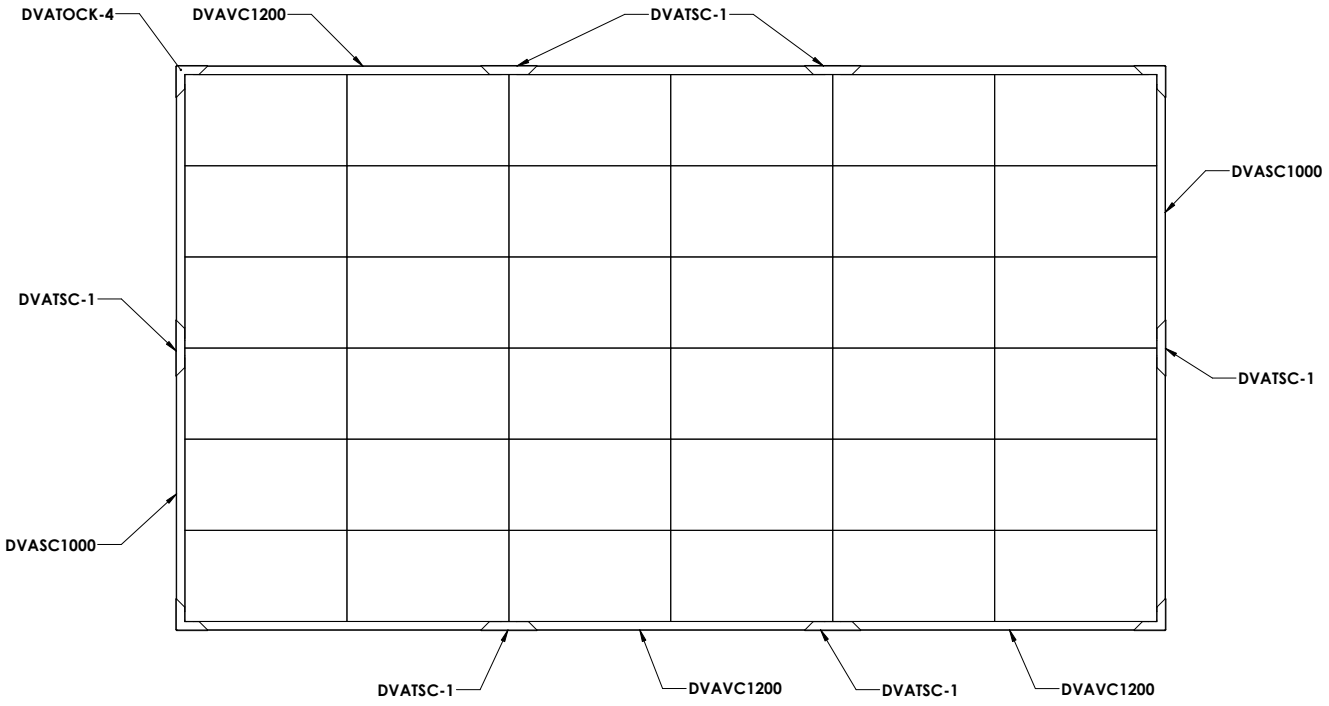


DIMENSIONS: INCHES
[MILLIMETERS]

## DIMENSIONS (continued)

### 8 x 4 Configuration

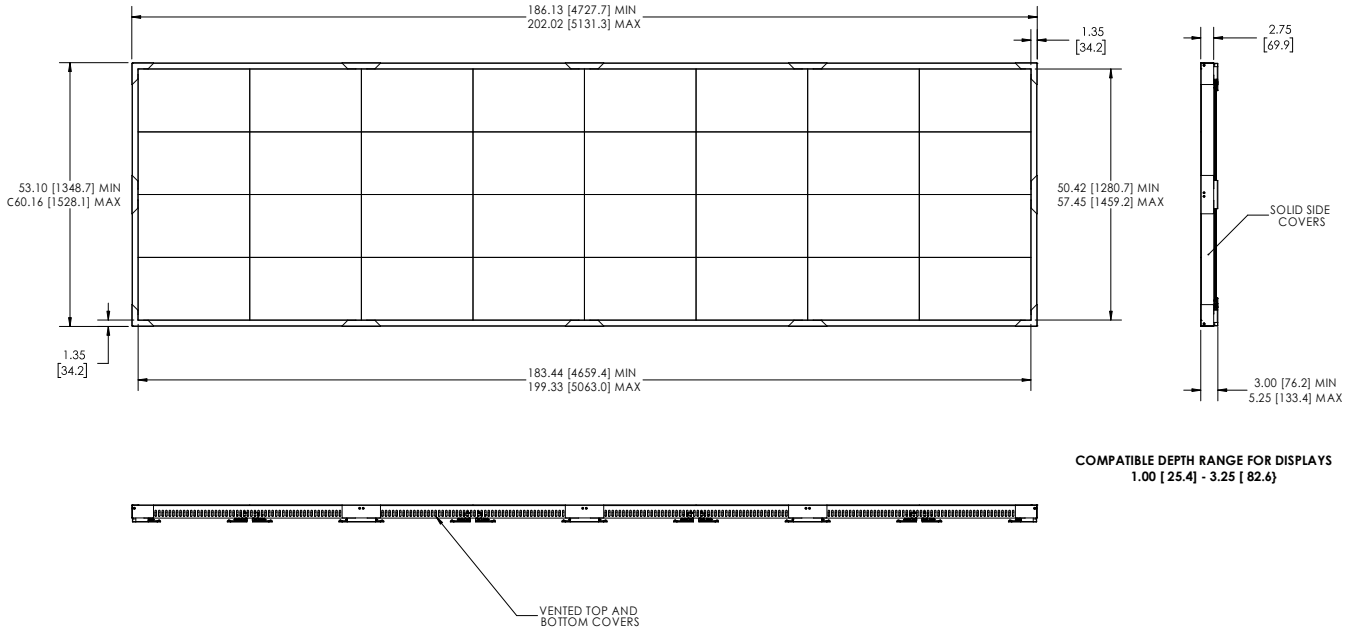


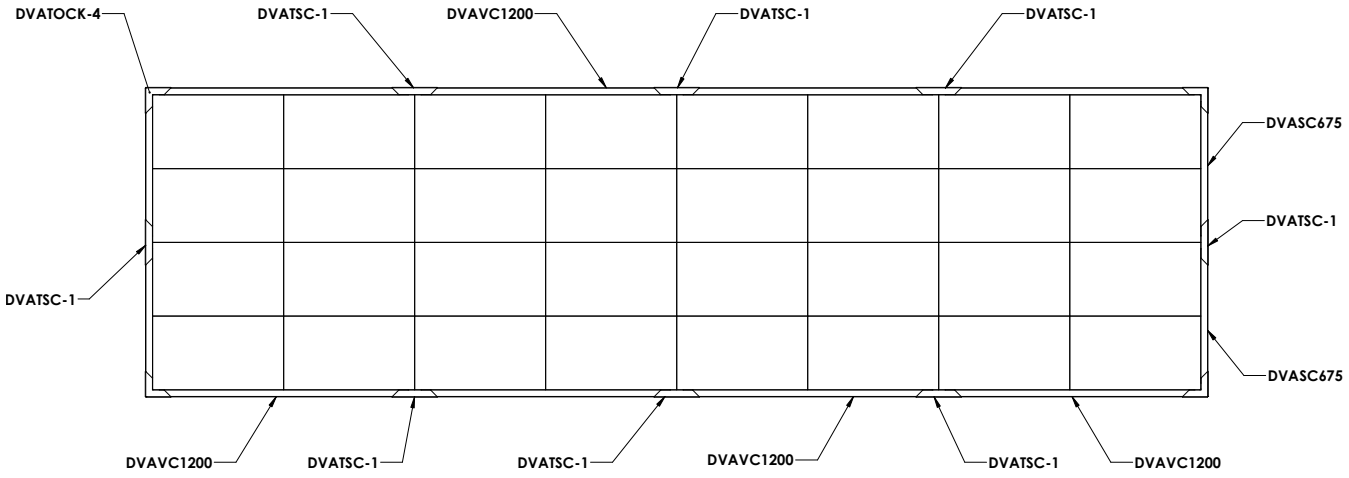


DIMENSIONS: INCHES
[MILLIMETERS]

## DIMENSIONS (continued)

### 8 x 8 Configuration

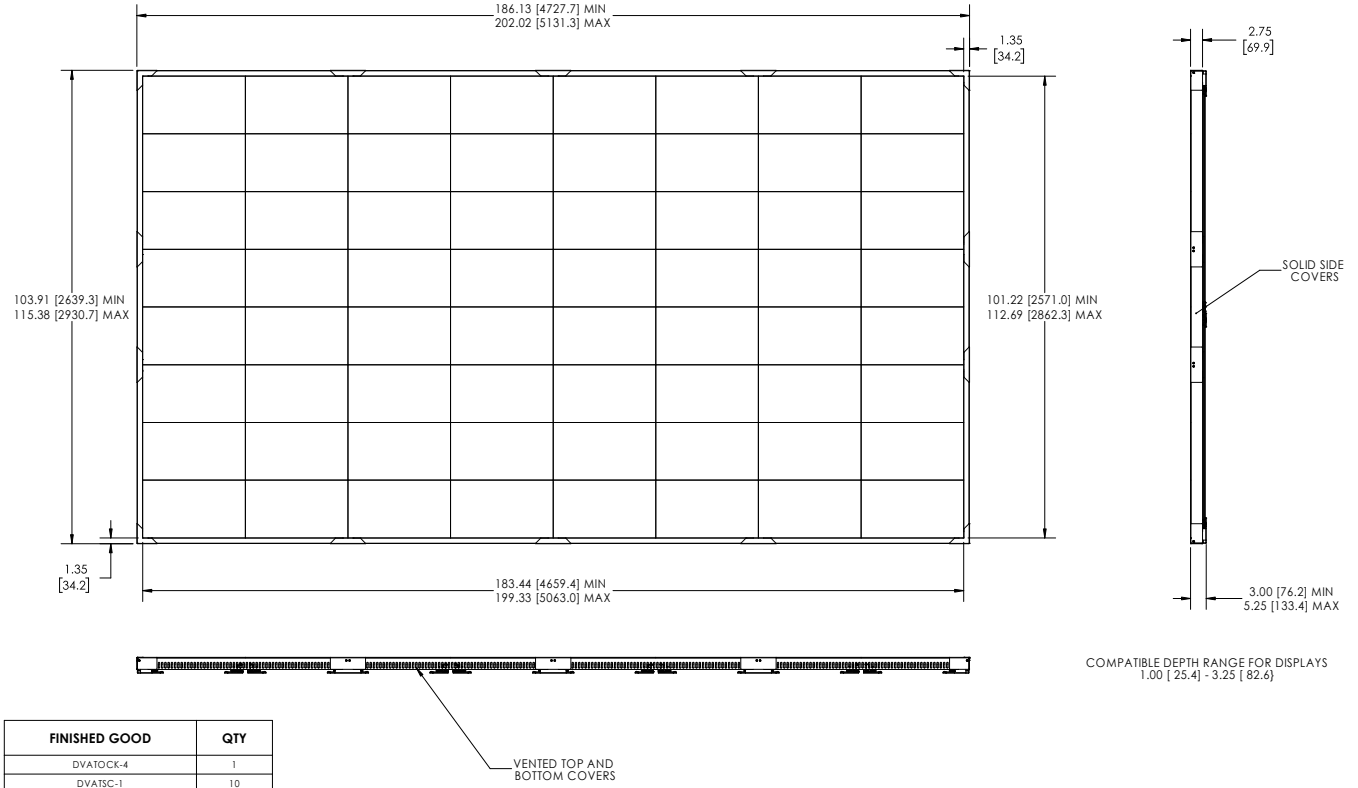


| FINISHED GOOD | QTY |
|---|---|
| DVATOCK-4 | 1 |
| DVATSC-1 | 10 |
| DVAVC1200 | 4 |
| DVASC1000 | 2 |
| | 1 |

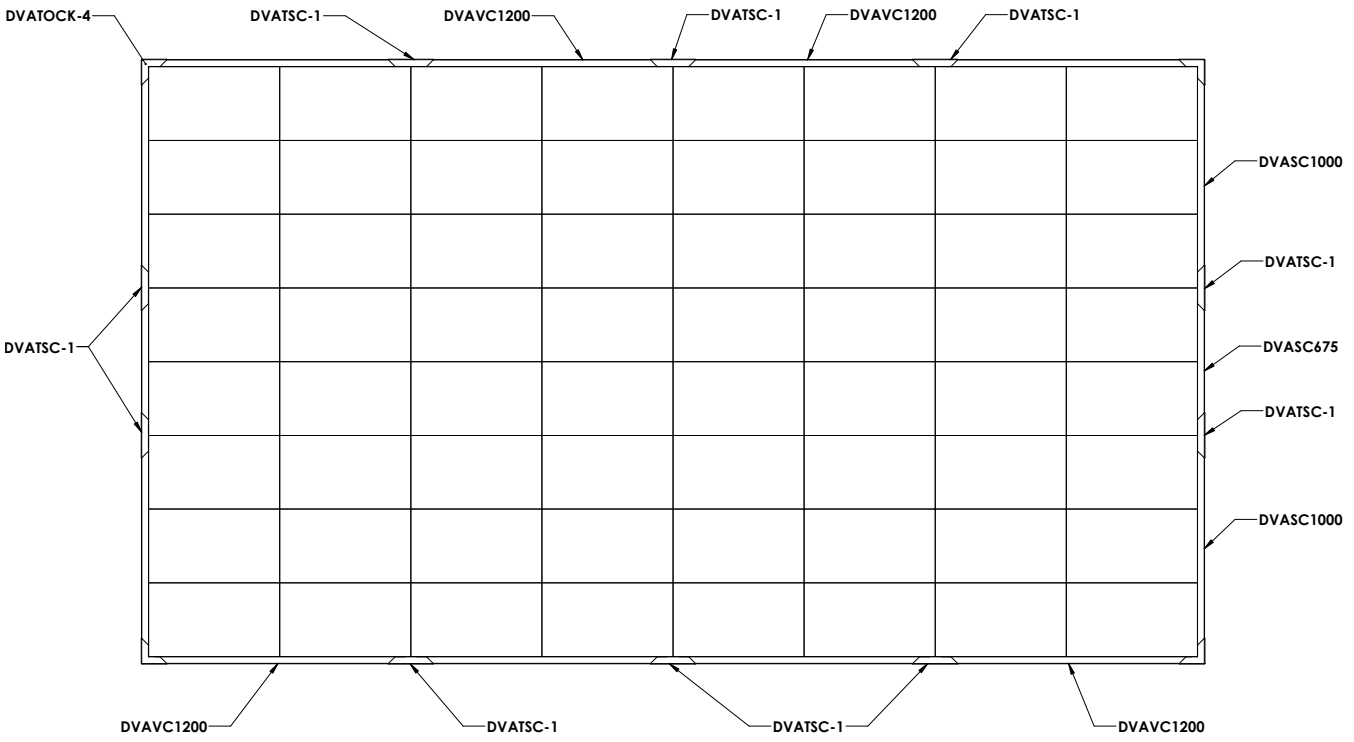


DIMENSIONS: INCHES
[MILLIMETERS]

## LEGEND

| | |
|---|---|
| 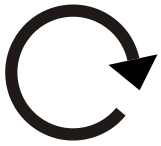 | Tighten Fastener<br>Apretar elemento de fijación<br>Befestigungsteil festziehen<br>Apertar fixador<br>Serrare il fissaggio<br>Bevestiging vastdraaien<br>Serrez les fixations |
| 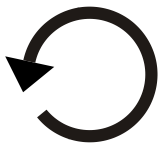 | Loosen Fastener<br>Aflojar elemento de fijación<br>Befestigungsteil lösen<br>Desapertar fixador<br>Allentare il fissaggio<br>Bevestiging losdraaien<br>Desserrez les fixations |
|  | Phillips Screwdriver<br>Destornillador Phillips<br>Kreuzschlitzschraubendreher<br>Chave de fendas Phillips<br>Cacciavite a stella<br>Kruiskopschroevendraaier<br>Tournevis à pointe cruciforme |
|  | Open-Ended Wrench<br>Llave de boca<br>Gabelschlüssel<br>Chave de bocas<br>Chiave a punte aperte<br>Steeksleutel<br>Clé à fourche |
|  | By Hand<br>A mano<br>Von Hand<br>Com a mão<br>A mano<br>Met de hand<br>À la main |
|  | Hex-Head Wrench<br>Llave de cabeza hexagonal<br>Sechskantschlüssel<br>Chave de cabeça sextavada<br>Chiave esagonale<br>Zeskantsleutel<br>Clé à tête hexagonale |
|  | Pencil Mark<br>Marcar con lápiz<br>Stiftmarkierung<br>Marcar com lápis<br>Segno a matita<br>Potloodmerkteken<br>Marquage au crayon |
|  | Drill Hole<br>Perforar<br>Bohrloch<br>Fazer furo<br>Praticare un foro<br>Gat boren<br>Percez un trou |
| 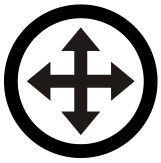 | Adjust<br>Ajustar<br>Einstellen<br>Ajustar<br>Regolare<br>Afstellen<br>Ajuster |
|  | Remove<br>Quitar<br>Entfernen<br>Remover<br>Rimuovere<br>Verwijderen<br>Retirez |
|  | Optional<br>Opcional<br>Optional<br>Opcional<br>Opzionale<br>Optie<br>En option |
|  | Security Wrench<br>Llave de seguridad<br>Sicherheitsschlüssel<br>Chave de segurança<br>Chiave di sicurezza<br>Veiligheidssleutel<br>Clé de sécurité |

## TOOLS REQUIRED FOR INSTALLATION

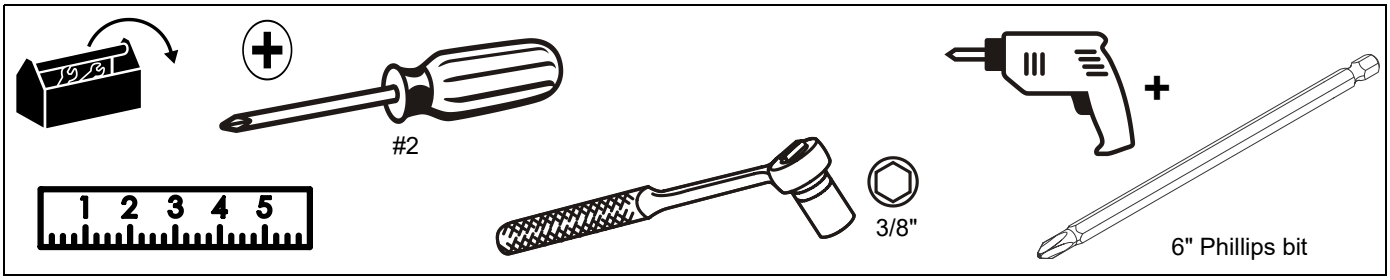


## PARTS

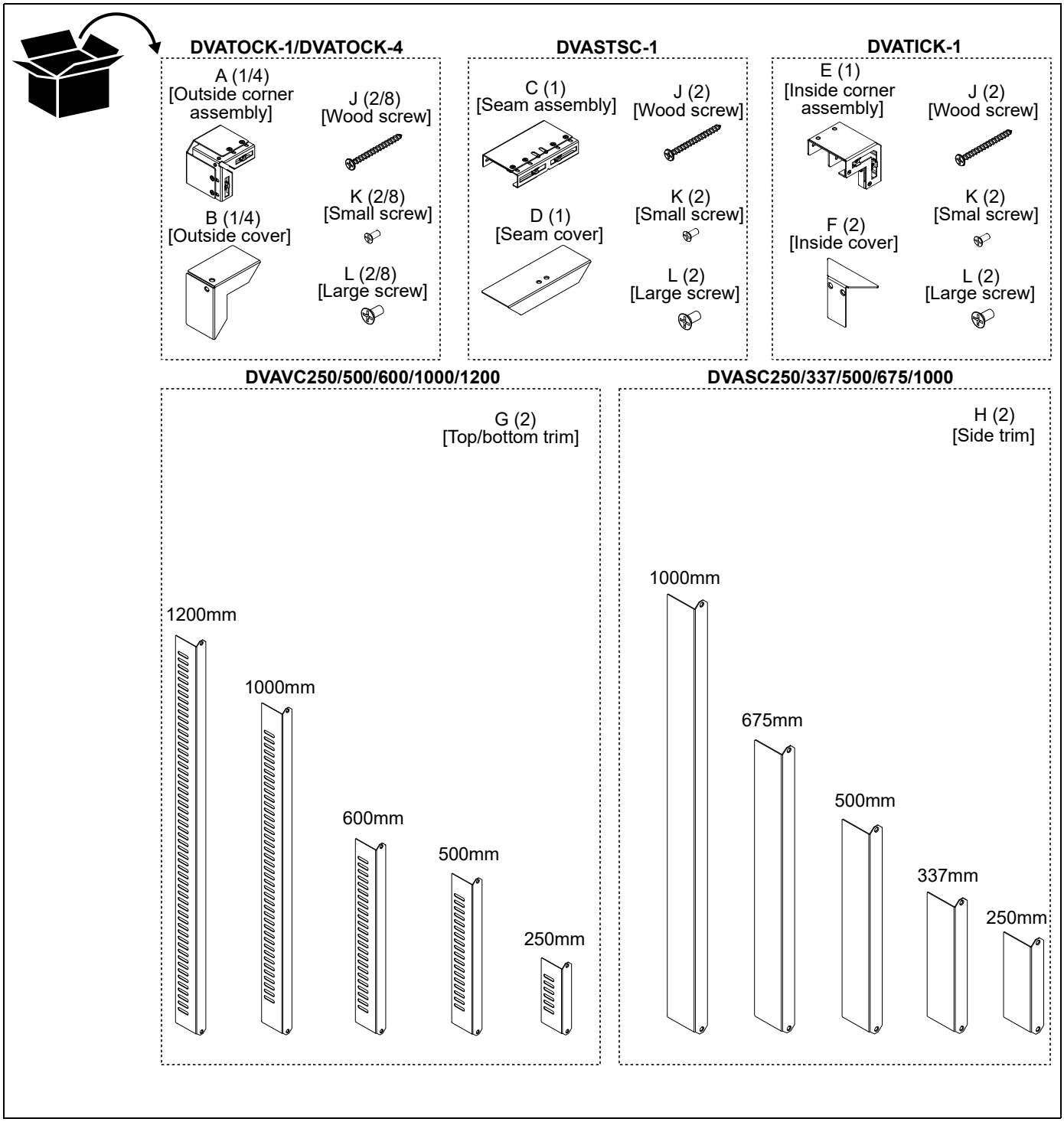

## Assembly And Installation

1. Determine the positions for the needed outside corner assemblies (A), inside corner assemblies (E), and seam assemblies (C) around the outside perimeter of the display wall. (See Figure 1)

**IMPORTANT ! :** For standard 27" diagonal displays, seam assemblies (C) can be placed at a maximum distance of two panels along the top/bottom edges or three panels along side edges. Align the "V" notch in the seam assembly with the seam between the displays.

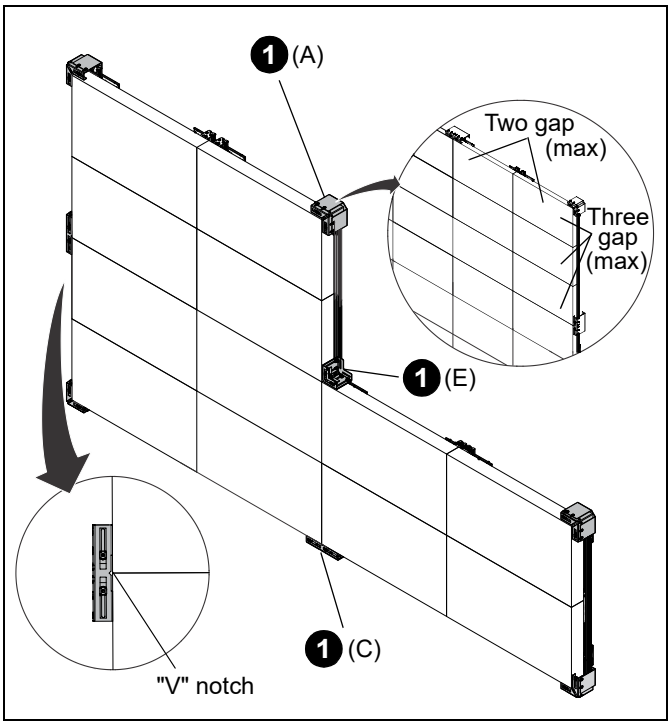


**Figure 1**

2. Loosen the four screws or hex nuts in each outside corner assembly (A), inside corner assembly (E), and seam assembly (C), then slide the inside of the assemblies outward. Leave screws/nuts loose for now. (See Figure 2)

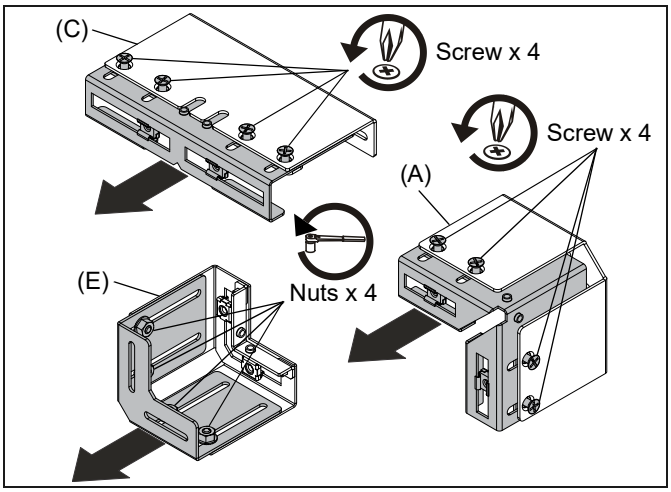


**Figure 2**

3. Place and hold the outside corner assemblies (A), inside corner assemblies (E), and seam assemblies (C) in the desired positions and install to the wall using two wood screws (J) per assembly. (See Figure 3)

**NOTE:** Insert the wood screws (J) through the slots in the front face of each assembly and install into the slot placed against the surface of the wall. Use a 6" Phillips drill bit or screwdriver to help reach through the front slots.

**NOTE:** The cage nuts in the front slots can slide within the slot to allow clearance for installing the wood screws.

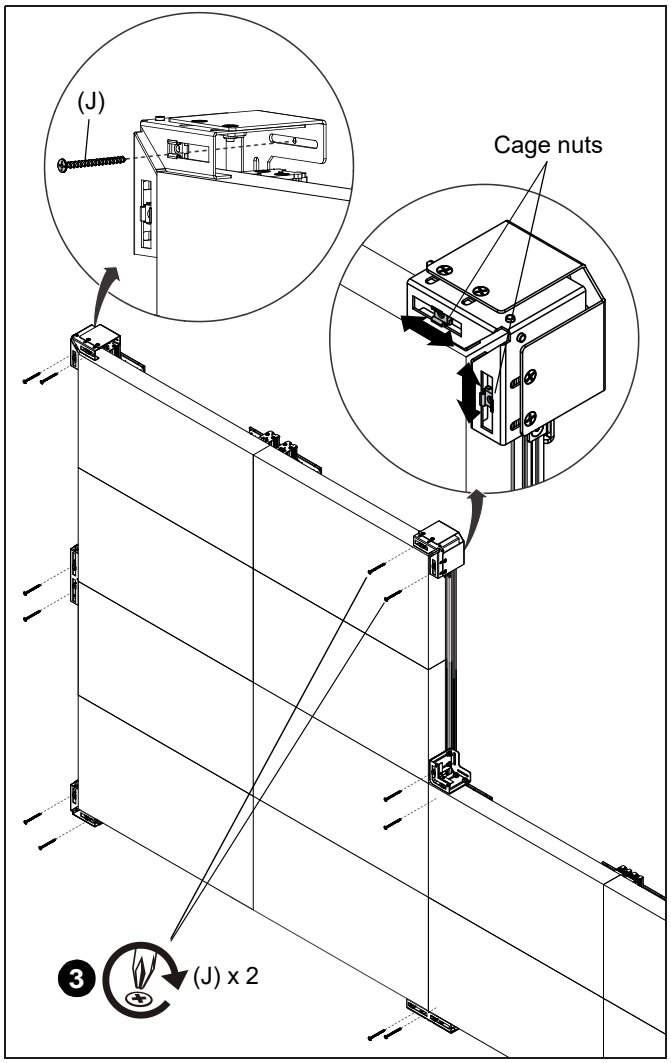


**Figure 3**

4. Slide the inside of the outside (A) and inside (E) corner assemblies in or out until they are positioned 1/8" (3.1 mm) from the face of the displays. (See Figure 4)
5. Slide the inside of each seam assembly (C) until they are positioned 1/8" (3.1 mm) from the face of the displays. (See Figure 4)
6. Tighten the screws in each assembly to set the position. (See Figure 4)

**Just a tip -** Measure the depth of the display to set the adjustment on the corner and seam covers prior to installing to the wall.

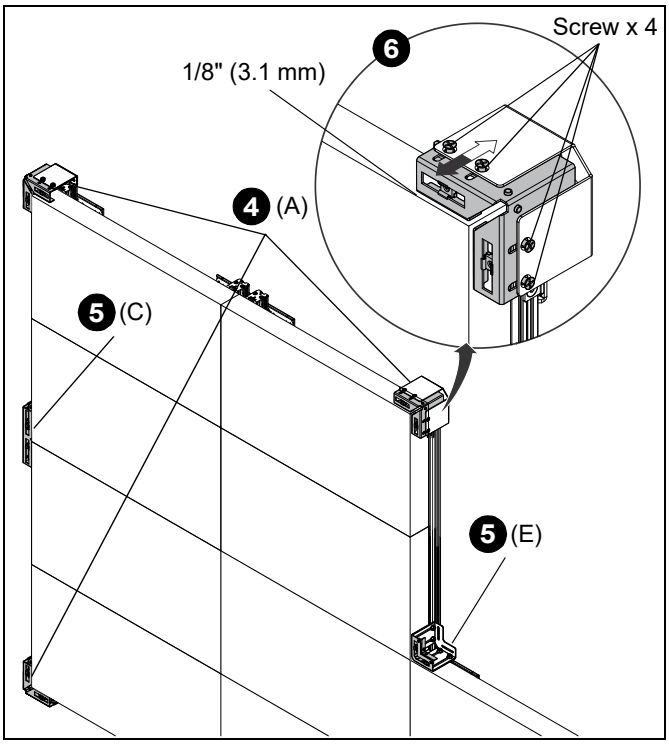


**Figure 4**

7. Install the top and bottom trim pieces (G) using two large screws (L) per piece. Screws install into the cage nuts in the corner and seam assemblies. (See Figure 5)

**NOTE:** To ensure a secure fitment, tighten screws enough to flatten the bends on the cage nuts.

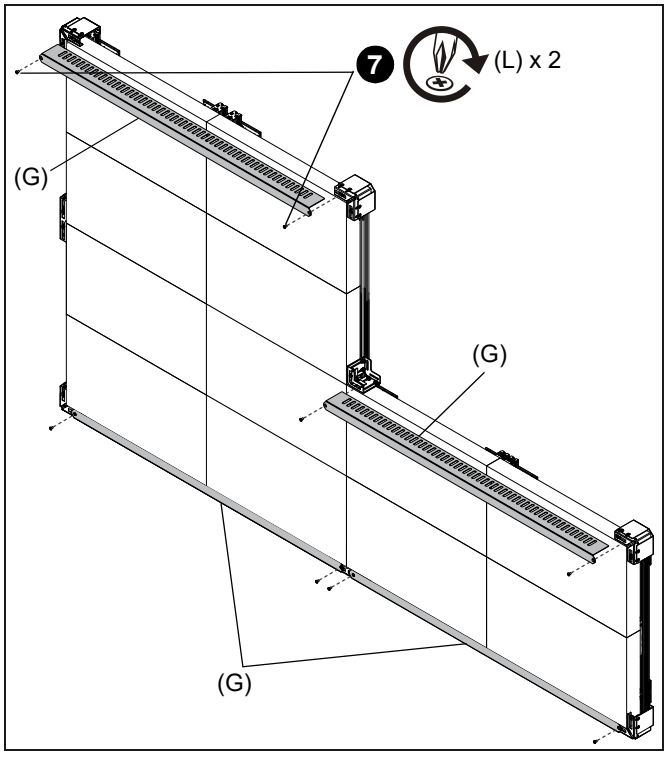


**Figure 5**

8. Install the side trim pieces (H) using two large screws (L) per piece. Screws install into the cage nuts in the corner and seam assemblies. (See Figure 6)

**NOTE:** To ensure a secure fitment, tighten screws enough to flatten the bends on the cage nuts.

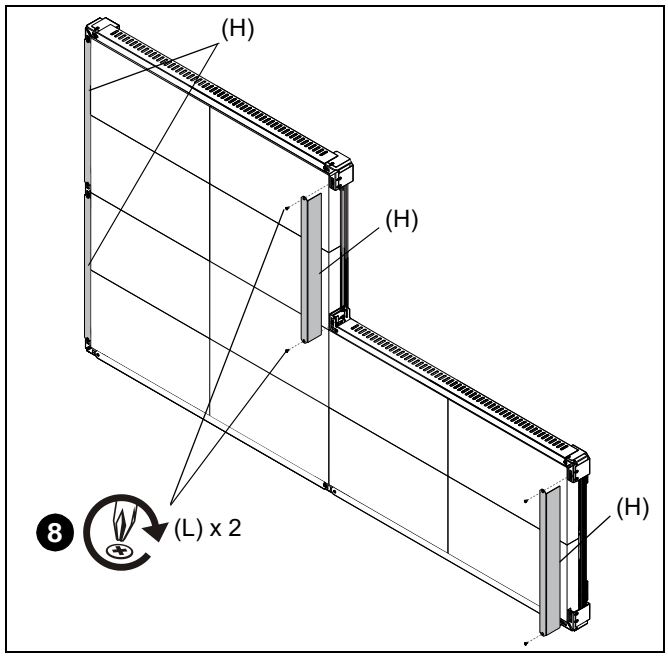


**Figure 6**

9. Install the outside covers (B), inside covers (F), and seam covers (D) over the corner and seam assemblies using two small screws (K) per cover. (See Figure 7)

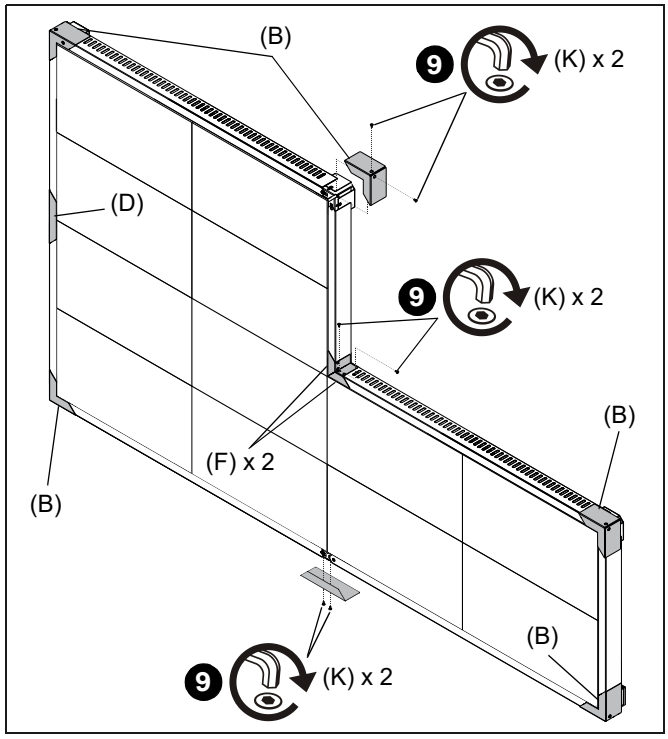


**Figure 7**

CHIEF®

A brand of legrand®

8800-003488 Rev00
©2026 Legrand | AV
**www.legrandav.com**
06/2026

**USA/International**
**A** 10900 Red Circle Drive, Minnetonka, MN 55343
**P** 800.582.6480 / 952.225.6000
**F** 877.894.6918 / 952.894.6918

**Europe**
**A** Franklinstraat 14, 6003 DK Weert, Netherlands
**P** +31 (0) 495 580 852
**F** +31 (0) 495 580 845

**Asia Pacific**
**A** Office No. 918 on 9/F, Shatin Galleria
18-24 Shan Mei Street
Fotan, Shatin, Hong Kong
**P** 852 2145 4099
**F** 852 2145 4477

30% POST-CONSUMER CONTENT