KYOCERA

# KM-C2525E
# KM-C3225E
# KM-C3232E
# KM-C4035E

## PARTS LIST

Published in July 2007
2JLPL072
842JL122
Rev.2

# NOTES

1. Indicate parts number and parts description together with the machine model name when placing an order.

| e.g. Parts Number | Parts Name | Machine Model | Quantity |
|---|---|---|---|
| 302JL04010 | BASE EMBLEM 2525E (25/25ppm) | KM-C2525E | 1 |
| 302JJ04010 | BASE EMBLEM 3225E (32/25ppm) | KM-C3225E | 1 |
| 302JG04010 | BASE EMBLEM 3232E (32/32ppm) | KM-C3232E | 1 |
| 302JD04050 | BASE EMBLEM 4035E (40/35ppm) | KM-C4035E | 1 |

2. Symbols in the "Parts Number" column.

- Parts with "•" are component parts or sub-assemblies of the assembly appearing immediately above them.

| e.g. Parts Number | Parts Name | Parts Number | Parts Name |
|---|---|---|---|
| 302FZ00440 | COVER INNER LEFT ASS'Y | •2BL16220 | BRUSH CLEANER |
| | | •302FZ04210 | COVER INNER LEFT |

- Parts with "⊙" indicate regular maintenance parts.

3. Items indicated in Description column as (OPTION) are Consumable parts.

# CONTENTS


FIG. 1 Covers ..... 2
FIG. 2 Frames I ..... 4
FIG. 3 Frames II ..... 6
FIG. 4 Paper Cassette I ..... 8
FIG. 5 Paper Cassette II ..... 10
FIG. 6 Primary Unit ..... 12
FIG. 7 Paper Conveying I ..... 14
FIG. 8 Paper Conveying II ..... 16
FIG. 9 Paper Conveying III ..... 18
FIG.10 Transfer Unit ..... 20
FIG.11 Optical Unit I ..... 22
FIG.12 Optical Unit II ..... 24
FIG.13 Imaging Unit ..... 26
FIG.14 Developer Unit ..... 28
FIG.15 Fuser Unit ..... 30
FIG.16 Driving Unit I (25/25ppm) (32/25ppm) (32/32ppm) . 32
FIG.16 Driving Unit I (40/35ppm) ..... 34
FIG.17 Driving Unit II (25/25ppm) (32/25ppm) (32/32ppm) 36
FIG.17 Driving Unit II (40/35ppm) ..... 38
FIG.18 Cooling Unit ..... 40
FIG.19 Paper Exit ..... 42
FIG.20 MPT Assy ..... 44
FIG.21 Table Bypass ..... 46
FIG.22 MPT Bypass Assy ..... 48
FIG.23 Electrical Components I ..... 50
FIG.24 Electrical Components II ..... 52
FIG.25 Electrical Components III ..... 54
FIG.26 Controller Box ..... 56
FIG.27 Operation Unit ..... 58
FIG.28 Options I ..... 60
FIG.29 Options II ..... 62
FIG.30 Accessories & Tools ..... 64
FIG.31 Maintenance Kits ..... 66

• INDEX ..... 67

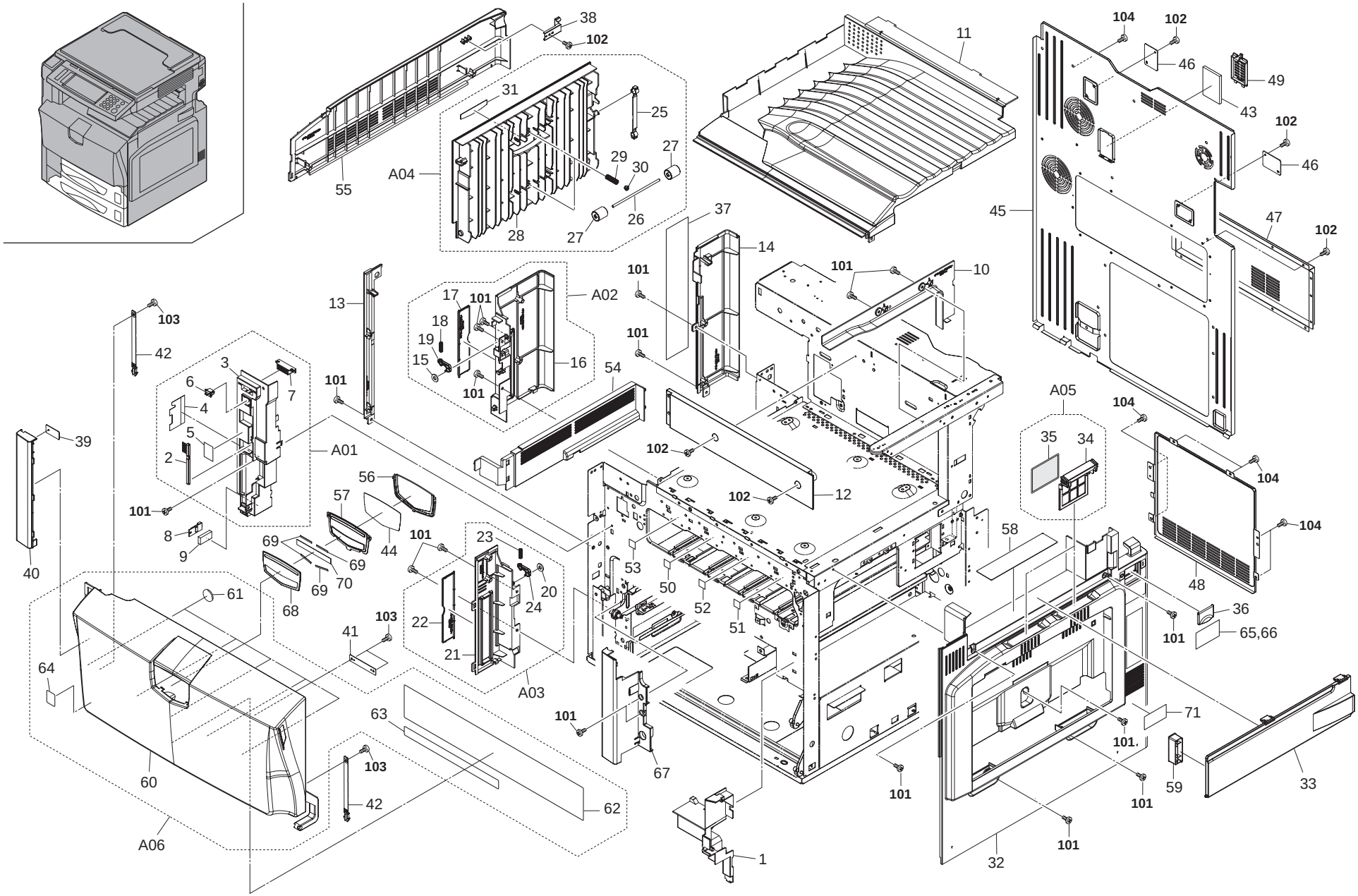
1
2
3
4
5
6
7
8
9
10
11
12
13
14
15
16
17
18
19
20
21
22
23
24
25
26
27
28
29
30
31
32
33
34
35
36
37
38
39
40
41
42
43
44
45
46
47
48
49
50
51
52
53
54
55
56
57
58
59
60
61
62
63
64
65,66
67
68
69
70
71
A01
A02
A03
A04
A05
A06
101
102
103
104

## FIG. 1 Covers

| | Ref. No. | Part.No. | Alternative. | Description | Quantity 110 | 120 | 230 | 240 |
|---|---|---|---|---|---|---|---|---|
| ⊙ | 1 | 302FZ04200 | 2FZ04200 | COVER INNER RIGHT | 1 | 1 | 1 | 1 |
| ⊙ | A01 | 302FZ00440 | 2FZ00440 | COVER INNER LEFT ASS'Y | 1 | 1 | 1 | 1 |
| | 2 | •2BL16220 | 5AAVBRUSH036 | BRUSH CLEANER | 1 | 1 | 1 | 1 |
| ⊙ | 3 | •302FZ04210 | 2FZ04210 | COVER INNER LEFT | 1 | 1 | 1 | 1 |
| | 4 | •302FZ04640 | 2FZ04640 | SHEET HARNESS LEFT | 1 | 1 | 1 | 1 |
| | 5 | •302GR34181 | 2GR34181 | LABEL SEP CLEAN NG | 1 | 1 | 1 | 1 |
| | 6 | •35927420 | | SWITCH,SIZE | 1 | 1 | 1 | 1 |
| | 7 | •60804120 | | MAGNET CATCH | 1 | 1 | 1 | 1 |
| ⊙ | 8 | 2FB27060 | | SENSOR HUMIDITY | 1 | 1 | 1 | 1 |
| | 9 | 302FZ04730 | 2FZ04730 | SPACER SENSOR | 1 | 1 | 1 | 1 |
| ⊙ | 10 | 302FZ04190 | 2FZ04190 | COVER RIGHT TRAY | 1 | 1 | 1 | 1 |
| ⊙ | 11 | 302FZ04040 | 2FZ04040 | COVER TOP | 1 | 1 | 1 | 1 |
| | 12 | 2BJ04031 | | REAR COVER TRAY | 1 | 1 | 1 | 1 |
| ⊙ | 13 | 302FZ04430 | 2FZ04430 | COVER LEFT FRONT TOP | 1 | 1 | 1 | 1 |
| ⊙ | 14 | 302FZ04440 | 2FZ04440 | COVER LEFT REAR TOP | 1 | 1 | 1 | 1 |
| ⊙ | A02 | 302FZ00450 | 2FZ00450 | COVER LEFT REAR ASS'Y | 1 | 1 | 1 | 1 |
| | 15 | •2BG22990 | | CUT WASHER 4 | 1 | 1 | 1 | 1 |
| ⊙ | 16 | •302FZ04160 | 2FZ04160 | COVER LEFT REAR | 1 | 1 | 1 | 1 |
| ⊙ | 17 | •302FZ04240 | 2FZ04240 | L D COVER LEFT | 1 | 1 | 1 | 1 |
| | 18 | •5MMW261SD004 | 3B706550 | SPRING COVER R /40283V0069 A4 | 1 | 1 | 1 | 1 |
| | 19 | •5MVX421DN003 | 2BL06490 | LOCK COVER R /40283V0068 A4 | 1 | 1 | 1 | 1 |
| ⊙ | A03 | 302FZ00460 | 2FZ00460 | COVER LEFT FRONT ASS'Y | 1 | 1 | 1 | 1 |
| | 20 | •2BG22990 | | CUT WASHER 4 | 1 | 1 | 1 | 1 |
| ⊙ | 21 | •302FZ04150 | 2FZ04150 | COVER LEFT FRONT | 1 | 1 | 1 | 1 |
| ⊙ | 22 | •302FZ04240 | 2FZ04240 | L D COVER LEFT | 1 | 1 | 1 | 1 |
| | 23 | •5MMW261SD004 | 3B706550 | SPRING COVER R /40283V0069 A4 | 1 | 1 | 1 | 1 |
| | 24 | •5MVX421DN003 | 2BL06490 | LOCK COVER R /40283V0068 A4 | 1 | 1 | 1 | 1 |
| ⊙ | A04 | 302FZ93311 | 2FZ93311 | PARTS COVER FEED LOW ASS'Y | 1 | 1 | 1 | 1 |
| | 25 | •2BG06480 | | BAND B | 1 | 1 | 1 | 1 |
| | 26 | •302BG06152 | 2BG06152 | SHAFT FEED B | 2 | 2 | 2 | 2 |
| | 27 | •302BG06162 | 2BG06162 | PULLEY FEED | 4 | 4 | 4 | 4 |
| ⊙ | 28 | •302FZ04350 | 2FZ04350 | COVER FEED LOW | 1 | 1 | 1 | 1 |
| | 29 | •302FZ04761 | 2FZ04761 | SPRING FEED LOW | 2 | 2 | 2 | 2 |
| | 30 | •302FZ24600 | 2FZ24600 | BUSH SP | 2 | 2 | 2 | 2 |
| | 31 | •302GR34040 | 2GR34040 | LABEL LEFT COVER A | 1 | 1 | 1 | 1 |
| ⊙ | 32 | 302FZ04060 | 2FZ04060 | COVER RIGHT | 1 | 1 | 1 | 1 |
| ⊙ | 33 | 302FZ04071 | 2FZ04071 | COVER RIGHT MID A | 1 | 1 | 1 | 1 |
| ⊙ | A05 | 302FZ00470 | 2FZ00470 | COVER FILTER ASS'Y | 2 | 2 | 2 | 2 |
| | 34 | •302FZ04470 | 2FZ04470 | COVER FILTER | 2 | 2 | 2 | 2 |
| | 35 | •302FZ04500 | 2FZ04500 | FILTER DUST | 2 | 2 | 2 | 2 |
| | 36 | 302FZ04630 | 2FZ04630 | COVER MA N SW | 1 | 1 | 1 | 1 |
| ⊙ | 37 | 302FZ34021 | 2FZ34021 | LABEL JAM FUSER | 1 | 1 | 1 | 1 |
| | 38 | 302FZ04830 | 2FZ04830 | PLATE COVER LEFT MID | 1 | 1 | 1 | 1 |
| ⊙ | 39 | 302FZ04250 | 2FZ04250 | PLATE MAGNET | 1 | 1 | 1 | 1 |
| ⊙ | 40 | 302FZ04120 | 2FZ04120 | COVER FRONT SIDE MID | 1 | 1 | 1 | 1 |
| | 41 | 5MMS626SD003 | 2BM04100 | PLATE MAGCHATCH | 1 | 1 | 1 | 1 |
| | 42 | 302FZ04490 | 2FZ04490 | STRAP COVER FRONT | 2 | 2 | 2 | 2 |
| | 43 | 302FZ33240 | 2FZ33240 | FILTER DUCT PU | 1 | 1 | 1 | 1 |
| | 44 | 302JD04070 | 2JD04070 | SHEET EMBLEM | 1 | 1 | 1 | 1 |
| | 45 | 302FZ04231 | 2FZ04231 | COVER REAR (25/25ppm) (32/25ppm) (32/32ppm) | 1 | 1 | 1 | 1 |
| | 45 | 302JD04030 | 2JD04030 | COVER REAR (40/35ppm) | | 1 | 1 | 1 |
| | 46 | 2C912430 | | LID KMAS | 2 | 2 | 2 | 2 |
| | 47 | 302FZ04881 | 2FZ04881 | COVER REAR MOTOR (25/25ppm) (32/25ppm) (32/32ppm) | 1 | 1 | 1 | 1 |
| | 47 | 302JD04010 | 2JD04010 | COVER REAR MOTOR (40/35ppm) | | 1 | 1 | 1 |
| | 48 | 302FZ39640 | 2FZ39640 | LID SH ELD BOX (25/25ppm) (32/25ppm) (32/32ppm) | 1 | 1 | 1 | 1 |
| | 48 | 302JD04040 | 2JD04040 | LID SH ELD BOX (40/35ppm) | | 1 | 1 | 1 |
| | 49 | 302FZ33250 | 2FZ33250 | COVER FILTER DUCT PU | 1 | 1 | 1 | 1 |
| | 50 | 4AK73740 | 5MVVL221WN33 | LABEL CONTAINER T1 | 1 | 1 | 1 | 1 |
| | 51 | 4AK73750 | 5MVVL221WN34 | LABEL CONTAINER T2 | 1 | 1 | 1 | 1 |
| | 52 | 4AK73760 | 5MVVL221WN35 | LABEL CONTAINER T3 | 1 | 1 | 1 | 1 |
| | 53 | 4AK73770 | 5MVVL221WN36 | LABEL CONTAINER T4 | 1 | 1 | 1 | 1 |
| ⊙ | 54 | 302FZ04180 | 2FZ04180 | COVER EXIT TOP | 1 | 1 | 1 | 1 |
| ⊙ | 55 | 302FZ04170 | 2FZ04170 | COVER LEFT MID | 1 | 1 | 1 | 1 |
| | 56 | 302JD04060 | 2JD04060 | EMBLEM LOGO | 1 | 1 | 1 | 1 |
| | 57 | 302JL04010 | 2JL04010 | BASE EMBLEM 2525E (25/25ppm) | 1 | 1 | 1 | 1 |
| | 57 | 302JJ04010 | 2JJ04010 | BASE EMBLEM 3225E (32/25ppm) | 1 | 1 | 1 | 1 |
| | 57 | 302JG04010 | 2JG04010 | BASE EMBLEM 3232E (32/32ppm) | 1 | 1 | 1 | 1 |
| | 57 | 302JD04050 | 2JD04050 | BASE EMBLEM 4035E (40/35ppm) | | 1 | 1 | 1 |
| ⊙ | 58 | 302FZ34270 | 2FZ34270 | LABEL BOARD SET | 1 | 1 | 1 | 1 |
| | 59 | 303JT39020 | 3JT39020 | COVER CF | 1 | 1 | 1 | 1 |
| ⊙ | A06 | 302FZ80070 | 2FZ80070 | FRONT COVER A ASSY SP | | 1 | | |
| ⊙ | A06 | 302FZ80080 | 2FZ80080 | FRONT COVER E ASSY SP | | | 1 | 1 |
| ⊙ | A06 | 302FZ80190 | 2FZ80190 | FRONT COVER TW ASSY SP | 1 | | | |
| | 60 | •302FZ04010 | 2FZ04010 | COVER FRONT | 1 | 1 | 1 | 1 |
| | 61 | •302FZ04710 | 2FZ04710 | CUSHION COVER FRONT | 5 | 5 | 5 | 5 |
| | 62 | •302FZ34230 | 2FZ34230 | LABEL CONTAINER | 1 | 1 | 1 | 1 |
| | 63 | •302FZ34250 | 2FZ34250 | LABEL CONTAINER OPE A | | 1 | | |
| | 63 | •302FZ34260 | 2FZ34260 | LABEL CONTAINER OPE E | | | 1 | 1 |
| | 63 | •302FZ34290 | 2FZ34290 | LABEL CONTAINER OPE TW | 1 | | | |
| | 64 | •302G634070 | 2G634070 | LABEL ENERGY STAR | 1 | 1 | 1 | 1 |
| ⊙ | 65 | 302GR34230 | 2GR34230 | LABEL OFF CAUTION A | 1 | 1 | 1 | 1 |
| ⊙ | 66 | 302FZ34010 | 2FZ34010 | LABEL OFF CAUTION E | | 1 | 1 | 1 |
| ⊙ | 66 | 302FZ34280 | 2FZ34280 | LABEL OFF CAUTION TW | 1 | | | |
| ⊙ | 67 | 302FZ04110 | 2FZ04110 | COVER FRONT SIDE LOW | 1 | 1 | 1 | 1 |
| | 68 | 302JD04080 | 2JD04080 | PLATE EMBLEM | 1 | 1 | 1 | 1 |
| | 69 | 302JD04090 | 2JD04090 | TAPE EMBLEM A | 4 | 4 | 4 | 4 |
| | 70 | 302JD04100 | 2JD04100 | TAPE EMBLEM B | 1 | 1 | 1 | 1 |
| | 71 | 302DC05120 | 2DC05120 | LABEL CAUTION HG | 1 | 1 | 1 | 1 |
| | 101 | B1B64080 | | +BIND TAP-TITE P SCREW M4X08 | | | | |
| | 102 | 5MBTPB3006TW++R | B1A53060 | B ND T.T SCREW(+) / M3 X 6 CRFREE S-T | | | | |
| | 103 | BAA63080 | | +TP TAP-TITE P SCREW M3X08 | | | | |
| | 104 | B1A54080 | | +BIND TAP-TITE S SCREW M4X08 | | | | |

- Parts with "•" are component parts or sub-assemblies of the assembly appearing immediately above them.
- Parts with "⊙" indicate regular maintenance parts.

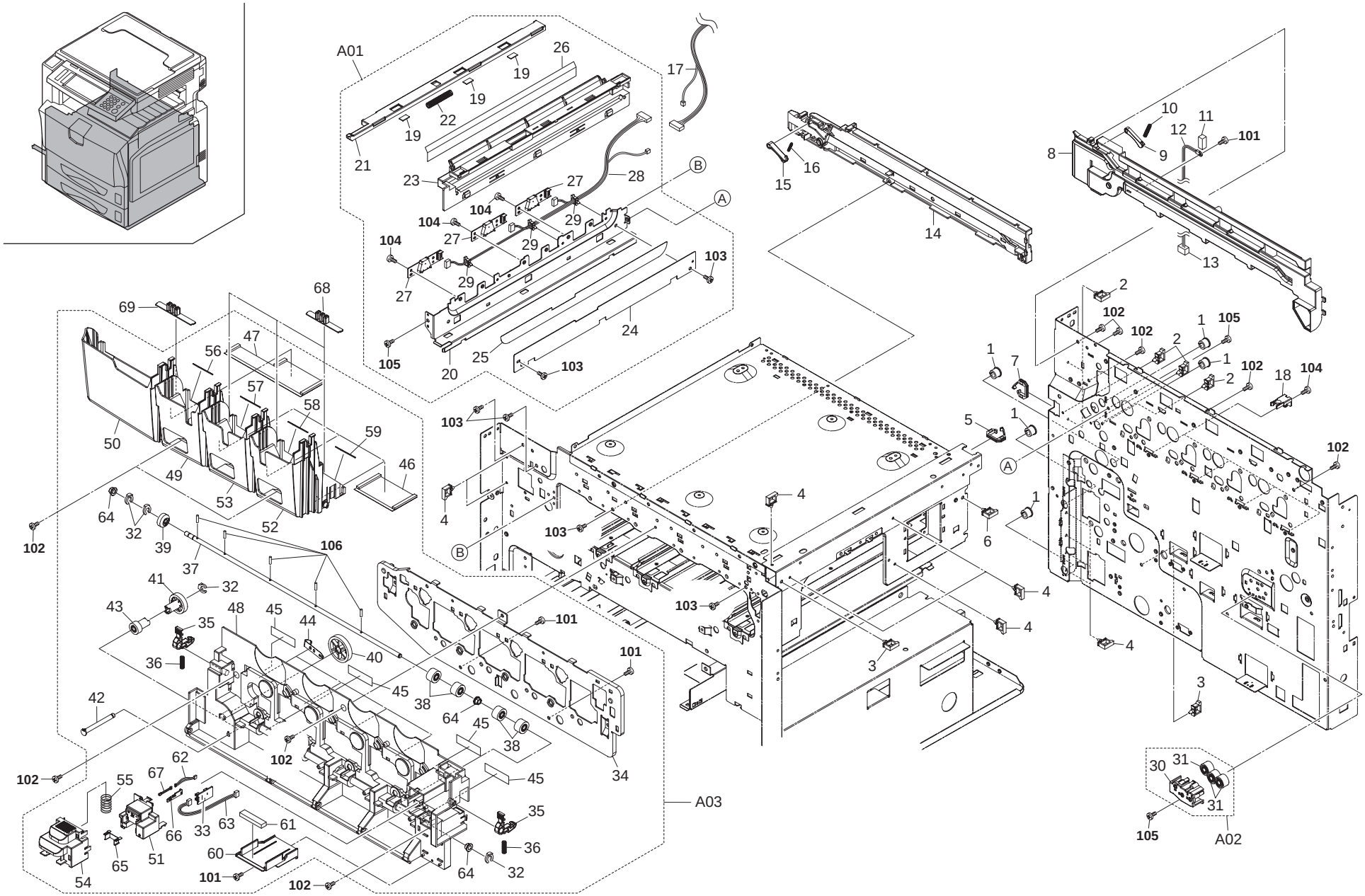
A01
A02
A03
101
102
103
104
105
106

| | Ref. No. | Part.No. | Alternative. | Description | Quantity 110 | 120 | 230 | 240 |
|---|---|---|---|---|---|---|---|---|
| | 1 | 7YZM110004++H01 | YZ037960 | ACCESS.BUSHING | 5 | 5 | 5 | 5 |
| | 2 | 7YZM610008++H01 | YZ037940 | ACCESS.SADDLE | 5 | 5 | 5 | 5 |
| | 3 | 7YZM610001++H01 | YZ010230 | ACCESS SADDLE | 2 | 2 | 2 | 2 |
| | 4 | 7YZM610007++H01 | YZ023340 | ACCESS.SADDLE | 10 | 10 | 10 | 10 |
| | 5 | 7YZM210003++H01 | YZ037970 | ACCESS.EDGING | 1 | 1 | 1 | 1 |
| | 6 | 7YZM610002++H01 | YZ010240 | ACCESS SADDLE | 1 | 1 | 1 | 1 |
| | 7 | 7YZM210002++H01 | YZ004730 | ACCESS.EDGING | 1 | 1 | 1 | 1 |
| | 8 | 302FZ02160 | 2FZ02160 | RAIL IMAGE REAR | 1 | 1 | 1 | 1 |
| | 9 | 302FZ02291 | 2FZ02291 | STOPPER IMAGE UNIT R | 1 | 1 | 1 | 1 |
| | 10 | 302FZ02300 | 2FZ02300 | SPRING STOPPER | 1 | 1 | 1 | 1 |
| | 11 | 302FZ39890 | 2FZ39890 | PAD WIRE A | 1 | 1 | 1 | 1 |
| ⊙ | 12 | 302FZ45120 | 2FZ45120 | THERMISTOR | 1 | 1 | 1 | 1 |
| | 13 | 7YCC02B1001+H01 | YC014610 | CONNECTOR | 1 | 1 | 1 | 1 |
| | 14 | 302FZ02150 | 2FZ02150 | RAIL IMAGE FRONT | 1 | 1 | 1 | 1 |
| | 15 | 302FZ02280 | 2FZ02280 | STOPPER IMAGE UNIT F | 1 | 1 | 1 | 1 |
| | 16 | 302FZ02300 | 2FZ02300 | SPRING STOPPER | 1 | 1 | 1 | 1 |
| | 17 | 302FZ46040 | 2FZ46040 | WIRE ID SENSOR | 1 | 1 | 1 | 1 |
| ⊙ | 18 | 302FZ02591 | 2FZ02591 | HOOK DLP | 4 | 4 | 4 | 4 |
| ⊙ | A01 | 302FZ94330 | 2FZ94330 | PARTS,ID SENSOR ASS'Y SP | 1 | 1 | 1 | 1 |
| | 19 | •2BG16590 | | FELT TC CLN | 3 | 3 | 3 | 3 |
| | 20 | •302FZ02170 | 2FZ02170 | RAIL DRUM LEFT | 1 | 1 | 1 | 1 |
| | 21 | •302FZ02190 | 2FZ02190 | SHUTTER D SENSOR | 1 | 1 | 1 | 1 |
| | 22 | •302FZ02200 | 2FZ02200 | SPRING SHUTTER ID SENSOR | 1 | 1 | 1 | 1 |
| | 23 | •302FZ02710 | 2FZ02710 | GU DE TC R | 1 | 1 | 1 | 1 |
| | 24 | •302FZ02770 | 2FZ02770 | PLATE ID SENSOR | 1 | 1 | 1 | 1 |
| | 25 | •302FZ02780 | 2FZ02780 | SHEET ID SENSOR | 1 | 1 | 1 | 1 |
| | 26 | •302FZ24020 | 2FZ24020 | SHEET TRANSFER R | 1 | 1 | 1 | 1 |
| ⊙ | 27 | •302FZ45080 | 2FZ45080 | ID SENSOR | 3 | 3 | 3 | 3 |
| | 28 | •302FZ46321 | 2FZ46321 | WIRE ID SENSOR UNIT | 1 | 1 | 1 | 1 |
| | 29 | •7YZM610007++H01 | YZ023340 | ACCESS.SADDLE | 3 | 3 | 3 | 3 |
| ⊙ | A02 | 302FZ93230 | 2FZ93230 | PARTS MPT JOINT ASS'Y | 1 | 1 | 1 | 1 |
| | 30 | •302FZ07500 | 2FZ07500 | BRACKET MPT GEAR | 1 | 1 | 1 | 1 |
| ⊙ | 31 | •302FZ07510 | 2FZ07510 | GEAR JOINT MPT | 3 | 3 | 3 | 3 |
| ⊙ | A03 | 302FZ00531 | 2FZ00531 | RETAINER PU ASS'Y | 1 | 1 | 1 | 1 |
| | 32 | •2BC06980 | | STOPPER 5 | 4 | 4 | 4 | 4 |
| ⊙ | 33 | •302FZ01280 | 2FZ01280 | PRINTED W.BOARD TONER FULL ASSY | 1 | 1 | 1 | 1 |
| | 34 | •302FZ02120 | 2FZ02120 | RETAINER PU | 1 | 1 | 1 | 1 |
| | 35 | •302FZ02410 | 2FZ02410 | LEVER RETAINER | 2 | 2 | 2 | 2 |
| | 36 | •302FZ02420 | 2FZ02420 | SPRING RETAINER | 2 | 2 | 2 | 2 |
| | 37 | •302FZ02810 | 2FZ02810 | SHAFT SWEEP DRIVE | 1 | 1 | 1 | 1 |
| ⊙ | 38 | •302FZ02820 | 2FZ02820 | GEAR SWEEP Z15 | 4 | 4 | 4 | 4 |
| ⊙ | 39 | •302FZ02830 | 2FZ02830 | GEAR SWEEP Z23 | 1 | 1 | 1 | 1 |
| ⊙ | 40 | •302FZ02840 | 2FZ02840 | GEAR SWEEP Z49 Z24 | 1 | 1 | 1 | 1 |
| ⊙ | 41 | •302FZ02850 | 2FZ02850 | GEAR SWEEP Z28 | 1 | 1 | 1 | 1 |
| | 42 | •302FZ02860 | 2FZ02860 | SHAFT FEED SWEEP | 1 | 1 | 1 | 1 |
| ⊙ | 43 | •302FZ02870 | 2FZ02870 | GEAR SWEEP Z20 | 1 | 1 | 1 | 1 |
| | 44 | •302FZ02900 | 2FZ02900 | PLATE DRUM EARTH | 4 | 4 | 4 | 4 |
| | 45 | •302FZ02910 | 2FZ02910 | TAPE RETAINER | 4 | 4 | 4 | 4 |
| ⊙ | 46 | •302FZ02920 | 2FZ02920 | SHEET TRAY CL | 3 | 3 | 3 | 3 |
| ⊙ | 47 | •302FZ02930 | 2FZ02930 | SHEET TRAY BK | 1 | 1 | 1 | 1 |
| ⊙ | 48 | •302FZ04510 | 2FZ04510 | COVER INNER MIDDLE | 1 | 1 | 1 | 1 |
| ⊙ | 49 | •302FZ04540 | 2FZ04540 | TRAY CONTAINER Y | 1 | 1 | 1 | 1 |
| ⊙ | 50 | •302FZ04550 | 2FZ04550 | TRAY CONTAINER BK | 1 | 1 | 1 | 1 |
| | 51 | •302FZ04571 | 2FZ04571 | COVER FULL SENSOR | 1 | 1 | 1 | 1 |
| ⊙ | 52 | •302FZ04590 | 2FZ04590 | TRAY CONTAINER M | 1 | 1 | 1 | 1 |
| ⊙ | 53 | •302FZ04600 | 2FZ04600 | TRAY CONTAINER C | 1 | 1 | 1 | 1 |
| | 54 | •302FZ04780 | 2FZ04780 | LEVER LOCK WASTE | 1 | 1 | 1 | 1 |
| | 55 | •302FZ04790 | 2FZ04790 | SPRING LOCK WASTE | 1 | 1 | 1 | 1 |
| ⊙ | 56 | •302FZ04890 | 2FZ04890 | SEAL TRAY BK | 1 | 1 | 1 | 1 |
| ⊙ | 57 | •302FZ04900 | 2FZ04900 | SEAL TRAY Y | 1 | 1 | 1 | 1 |
| ⊙ | 58 | •302FZ04910 | 2FZ04910 | SEAL TRAY C | 1 | 1 | 1 | 1 |
| ⊙ | 59 | •302FZ04920 | 2FZ04920 | SEAL TRAY M | 1 | 1 | 1 | 1 |
| | 60 | •302FZ04940 | 2FZ04940 | TRAY WASTE | 1 | 1 | 1 | 1 |
| | 61 | •302FZ04950 | 2FZ04950 | SPONGE TRAY WASTE | 1 | 1 | 1 | 1 |
| | 62 | •302FZ46310 | 2FZ46310 | WIRE WASTE TONER SENSOR | 1 | 1 | 1 | 1 |
| | 63 | •302FZ46710 | 2FZ46710 | WIRE TONER SENSOR JOINT | 1 | 1 | 1 | 1 |
| | 64 | •3CY07080 | | BUSHING 6 | 3 | 3 | 3 | 3 |
| | 65 | •5MMX321LD039 | 2D902590 | PLATE WASTE SENSOR /A-80 A3 | 1 | 1 | 1 | 1 |
| | 66 | •5MVS313SB002 | 2BR08310 | SPACER LED /43587J2063 A4 | 1 | 1 | 1 | 1 |
| | 67 | •7QPPT491F+++H01 | NAEFJ010 | TRANSISTOR PHOTO PT491FE0000F | 1 | 1 | 1 | 1 |
| | 68 | 302FZ02470 | 2FZ02470 | STOPPER CONTA NER CC | | 3 | | |
| | 68 | 302FZ02450 | 2FZ02450 | STOPPER CONTA NER CB | 3 | | 3 | 3 |
| | 69 | 302FZ02480 | 2FZ02480 | STOPPER CONTA NER BK CC | | 1 | | |
| | 69 | 302FZ02460 | 2FZ02460 | STOPPER CONTA NER BK CB | 1 | | 1 | 1 |
| | 101 | 5MBTPB3008PW++R | B1A63080 | B ND T.T SCREW(+) / M3 X 8 CRFREE P-T | | | | |
| | 102 | B1B64080 | | +BIND TAP-TITE P SCREW M4X08 | | | | |
| | 103 | 5MBTPB4010PW++R | B1A64100 | B ND T.T SCREW(+) / M4 X 10 CRFREE P-T | | | | |
| | 104 | 5MBTPB3006TW++R | B1A53060 | B ND T.T SCREW(+) / M3 X 6 CRFREE S-T | | | | |
| | 105 | B1A54080 | | +BIND TAP-TITE S SCREW M4X08 | | | | |
| | 106 | E5120100 | | SPRING PIN H7A 2X10 SUS | | | | |

- Parts with "•" are component parts or sub-assemblies of the assembly appearing immediately above them.
- Parts with "⊙" indicate regular maintenance parts.

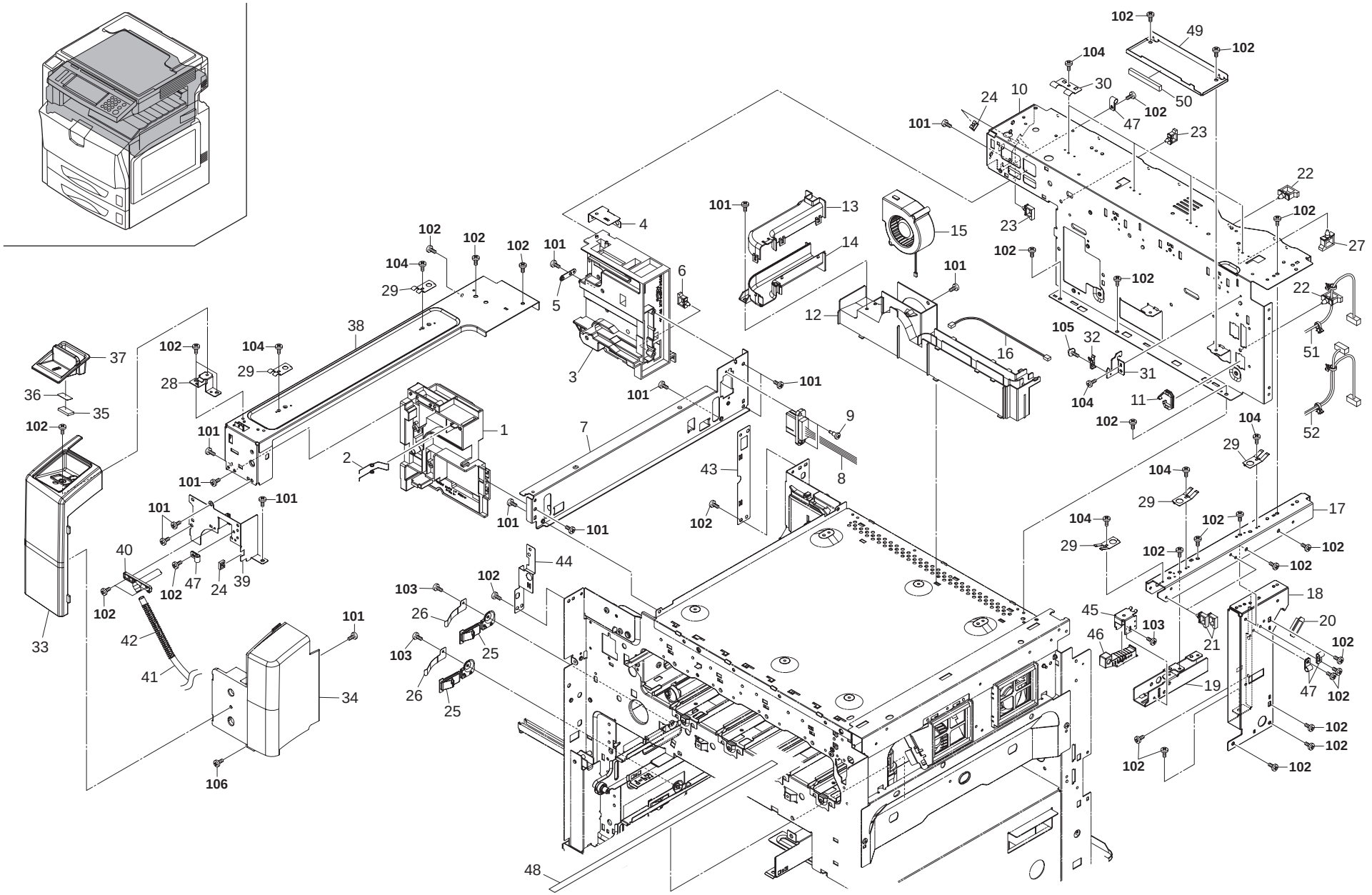
102
49
102
104
30
50
24
10
102
47
101
23
22
101
13
15
23
102
27
4
102
102
102
101
14
102
104
6
101
29
5
12
22
38
105
32
51
37
102
104
16
29
28
3
31
36
101
101
104
11
35
102
9
104
101
1
7
102
52
29
2
43
8
104
101
101
29
17
101
101
102
104
102
101
101
29
102
102
40
102
102
44
102
18
102
103
45
103
20
26
46
102
101
21
25
103
19
47
102
42
26
25
102
34
102
102
33
102
106
48

| | Ref. No. | Part.No. | Alternative. | Description | Quantity 110 | 120 | 230 | 240 |
|---|---|---|---|---|---|---|---|---|
| | 1 | 302FZ02260 | 2FZ02260 | FRAME FUSER UNIT FRONT | 1 | 1 | 1 | 1 |
| | 2 | 302FZ02510 | 2FZ02510 | SPRING EARTH EXIT | 1 | 1 | 1 | 1 |
| | 3 | 302FZ02270 | 2FZ02270 | FRAME FUSER UNIT REAR | 1 | 1 | 1 | 1 |
| | 4 | 302FZ39710 | 2FZ39710 | PLATE EARTH FUSER | 1 | 1 | 1 | 1 |
| | 5 | 302FZ02720 | 2FZ02720 | PLATE FUSER | 1 | 1 | 1 | 1 |
| | 6 | 7YZM610007++H01 | YZ023340 | ACCESS.SADDLE | 1 | 1 | 1 | 1 |
| | 7 | 302FZ02250 | 2FZ02250 | FRAME FUSER UNIT CENTER | 1 | 1 | 1 | 1 |
| | 8 | 302FZ46290 | 2FZ46290 | WIRE FUSER PRI | 1 | 1 | 1 | 1 |
| | 9 | 2BG02410 | | SCREW A | 2 | 2 | 2 | 2 |
| | 10 | 302FZ02341 | 2FZ02341 | STAY UPPER REAR | 1 | 1 | 1 | 1 |
| | 11 | 7YZM210002++H01 | YZ004730 | ACCESS.EDGING | 1 | 1 | 1 | 1 |
| | 12 | 302FZ33120 | 2FZ33120 | DUCT PU UPPER REAR | 1 | 1 | 1 | 1 |
| | 13 | 302FZ33210 | 2FZ33210 | DUCT PU LOWER | 1 | 1 | 1 | 1 |
| | 14 | 302FZ33220 | 2FZ33220 | DUCT PU UPPER | 1 | 1 | 1 | 1 |
| ⊙ | 15 | 302FZ94380 | 2FZ94380 | PARTS,FAN COOLING DLP 70 SP | 1 | 1 | 1 | 1 |
| | 16 | 302FZ46670 | 2FZ46670 | WIRE LSU FAN | 1 | 1 | 1 | 1 |
| | 17 | 302FZ02360 | 2FZ02360 | STAY ISU UPPER RIGHT | 1 | 1 | 1 | 1 |
| | 18 | 302FZ02380 | 2FZ02380 | STAY ISU MIDDLE RIGHT | 1 | 1 | 1 | 1 |
| | 19 | 302FZ02790 | 2FZ02790 | MOUNT ISU ADJUST | 1 | 1 | 1 | 1 |
| | 20 | 7YZM210003++H01 | YZ037970 | ACCESS.EDGING | 1 | 1 | 1 | 1 |
| | 21 | 7YZM610007++H01 | YZ023340 | ACCESS.SADDLE | 4 | 4 | 4 | 4 |
| | 22 | 7YZM610004++H01 | YZ012210 | ACCESS SADDLE | 2 | 2 | 2 | 2 |
| | 23 | 7YZM610001++H01 | YZ010230 | ACCESS SADDLE | 2 | 2 | 2 | 2 |
| | 24 | 7YZM210006++H01 | YZ038000 | ACCESS.EDGING | 2 | 2 | 2 | 2 |
| | 25 | 302GR02221 | 2GR02221 | LEVER LOCK CASSETTE | 2 | 2 | 2 | 2 |
| | 26 | 302GR02230 | 2GR02230 | SPRING LEVER | 2 | 2 | 2 | 2 |
| | 27 | 7YZM610003++H01 | YZ010250 | ACCESS SADDLE | 1 | 1 | 1 | 1 |
| | 28 | 302FZ02970 | 2FZ02970 | MOUNT FRONT S DE TOP | 1 | 1 | 1 | 1 |
| | 29 | 302GR02570 | 2GR02570 | GROUND PLATE ISU C | 5 | 5 | 5 | 5 |
| | 30 | 302GR02580 | 2GR02580 | GROUND PLATE ISU D | 4 | 4 | 4 | 4 |
| | 31 | 2BJ02110 | | FULCRUM PLATE,MIDDLE TRAY | 1 | 1 | 1 | 1 |
| | 32 | 2BJ02121 | | HOLDER,FULCRUM | 1 | 1 | 1 | 1 |
| ⊙ | 33 | 302FZ04130 | 2FZ04130 | COVER FRONT SIDE TOP | 1 | 1 | 1 | 1 |
| ⊙ | 34 | 302FZ04140 | 2FZ04140 | COVER EXIT FRONT | 1 | 1 | 1 | 1 |
| ⊙ | 35 | 302GR04370 | 2GR04370 | MAGNET CLIP DISH | 1 | 1 | 1 | 1 |
| ⊙ | 36 | 302GR04380 | 2GR04380 | SEAL MAGNET | 1 | 1 | 1 | 1 |
| ⊙ | 37 | 302FZ04450 | 2FZ04450 | CLIP DISH | 1 | 1 | 1 | 1 |
| | 38 | 302FZ02320 | 2FZ02320 | STAY UPPER LEFT | 1 | 1 | 1 | 1 |
| | 39 | 302FZ39740 | 2FZ39740 | PLATE FRAME FUSER F | 1 | 1 | 1 | 1 |
| | 40 | 302FZ33280 | 2FZ33280 | JOINT TUBE B | 1 | 1 | 1 | 1 |
| | 41 | 302FZ33350 | 2FZ33350 | TUBE COOLING EXIT | 1 | 1 | 1 | 1 |
| | 42 | 302FZ33390 | 2FZ33390 | SPRING TUBE | 1 | 1 | 1 | 1 |
| | 43 | 302FZ39750 | 2FZ39750 | PLATE EARTH FRAME REAR | 1 | 1 | 1 | 1 |
| | 44 | 302FZ39760 | 2FZ39760 | PLATE EARTH FRAME FRONT | 1 | 1 | 1 | 1 |
| | 45 | 302GR02311 | 2GR02311 | MOUNT RUBBER ISU | 1 | 1 | 1 | 1 |
| | 46 | 302GR02321 | 2GR02321 | ADJUSTOR ISU | 1 | 1 | 1 | 1 |
| | 47 | M7005010 | | CLAMP,EMT-3N(TAKEUCHI) | 4 | 4 | 4 | 4 |
| | 48 | 302FZ24170 | 2FZ24170 | SHEET RA L BYPASS | 1 | 1 | 1 | 1 |
| | 49 | 302FZ39490 | 2FZ39490 | SHIELD LSU W RE | 1 | 1 | 1 | 1 |
| | 50 | 7ZG65TAV+080H01 | ZG046700 | SHIELD GASKET | 1 | 1 | 1 | 1 |
| | 51 | 302FZ46500 | 2FZ46500 | WIRE KEYCOUNTOR (25/25ppm) (32/25ppm) (32/32ppm) | 1 | 1 | 1 | 1 |
| | 52 | 302JD46060 | 2JD46060 | WIRE APC FAN (40/35ppm) | | 1 | 1 | 1 |
| | 101 | 5MBTPB4010PW++R | B1A64100 | B ND T.T SCREW(+) / M4 X 10 CRFREE P-T | | | | |
| | 102 | B1A54080 | | +BIND TAP-TITE S SCREW M4X08 | | | | |
| | 103 | 5MBTPB3006TW++R | B1A53060 | B ND T.T SCREW(+) / M3 X 6 CRFREE S-T | | | | |
| | 104 | B1B03050 | | +BIND SCREW M3X05(TRIVALENT CHROM | | | | |
| | 105 | 5MBTPB4006TW++R | B1A54060 | B ND T.T SCREW(+) / M4 X 6 CRFREE S-T | | | | |
| | 106 | B1A64120 | | +BIND TAP-TITE P SCREW M4X12 | | | | |

- Parts with "•" are component parts or sub-assemblies of the assembly appearing immediately above them.
- Parts with "⊙" indicate regular maintenance parts.

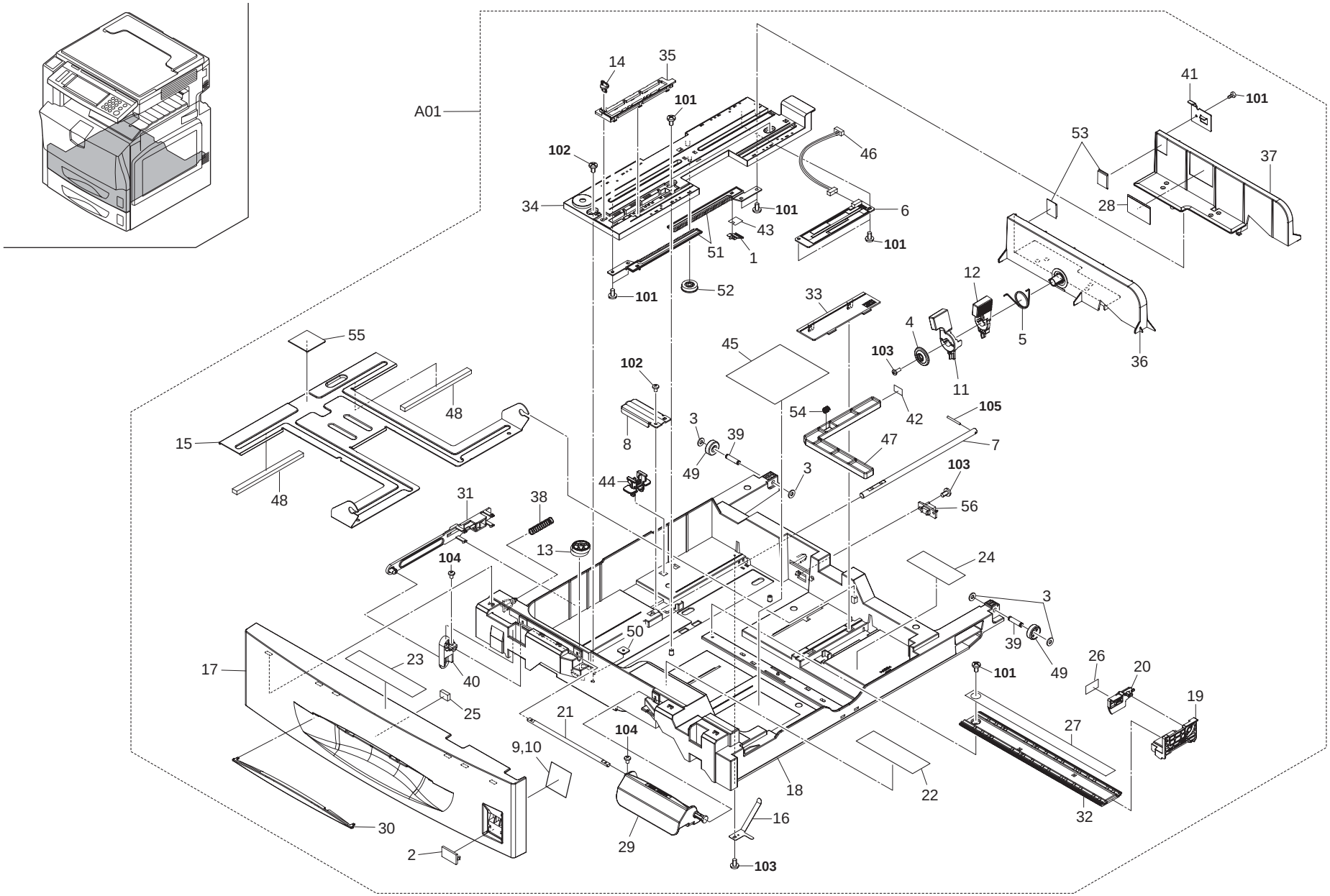
A01
14
35
101
102
34
46
6
43
51
1
52
41
53
37
28
12
5
36
33
4
103
11
45
55
48
15
8
3
39
49
54
42
105
47
7
44
31
38
13
104
56
24
50
17
23
40
25
21
9,10
30
2
29
16
18
22
32
27
26
20
19

FIG. 4 Paper Cassette I



| | Ref. No. | Part.No. | Alternative. | Description | Quantity 110 | 120 | 230 | 240 |
|---|---|---|---|---|---|---|---|---|
| ⊙ | A01 | 302FZ93034 | 2FZ93034 | PARTS CASSETTE 1ST ASSY | 1 | 1 | 1 | 1 |
| ⊙ | 1 | •2BC07860 | | TERMINAL,PAPER SIZE DETECTION | 1 | 1 | 1 | 1 |
| ⊙ | 2 | •2BL04310 | | PLATE NUMBER | 1 | 1 | 1 | 1 |
| | 3 | •2C904550 | | CUT WASHER 5 | 4 | 4 | 4 | 4 |
| | 4 | •2FB07050 | | PIN CURSOR | 1 | 1 | 1 | 1 |
| | 5 | •2FB07060 | | SPRING CURSOR | 1 | 1 | 1 | 1 |
| ⊙ | 6 | •2FG01020 | | SIZE DETECTION ASS'Y | 1 | 1 | 1 | 1 |
| | 7 | •302AR07041 | 2AR07041 | SHAFT,WORK PLATE | 1 | 1 | 1 | 1 |
| | 8 | •302BC06091 | 2BC06091 | WORK PLATE,LIFT CASSETTE | 1 | 1 | 1 | 1 |
| ⊙ | 9 | •302FB05200 | 2FB05200 | PLATE SIZE C | 1 | 1 | 1 | 1 |
| ⊙ | 10 | •302FB05210 | 2FB05210 | PLATE SIZE IN | 1 | 1 | 1 | 1 |
| | 11 | •302FB07032 | 2FB07032 | LEVER CURSOR A | 1 | 1 | 1 | 1 |
| | 12 | •302FB07042 | 2FB07042 | LEVER CURSOR B | 1 | 1 | 1 | 1 |
| | 13 | •302FB07340 | 2FB07340 | ADJUST NG PLATE CASSETTE | 1 | 1 | 1 | 1 |
| | 14 | •302FB07420 | 2FB07420 | PIN CASSETTE | 1 | 1 | 1 | 1 |
| | 15 | •302FG07091 | 2FG07091 | BASE CASSETTE | 1 | 1 | 1 | 1 |
| | 16 | •302FG07200 | 2FG07200 | GROUND PLATE,CASSETTE | 1 | 1 | 1 | 1 |
| ⊙ | 17 | •302FZ04090 | 2FZ04090 | COVER CASSETTE | 1 | 1 | 1 | 1 |
| | 18 | •302FZ09011 | 2FZ09011 | CASSETTE | 1 | 1 | 1 | 1 |
| ⊙ | 19 | •302FZ09030 | 2FZ09030 | CURSOR RIGHT | 1 | 1 | 1 | 1 |
| ⊙ | 20 | •302FZ09040 | 2FZ09040 | CURSOR RIGHT UPPER | 1 | 1 | 1 | 1 |
| | 21 | •302FZ09070 | 2FZ09070 | SHAFT HANDLE | 1 | 1 | 1 | 1 |
| | 22 | •302FZ09090 | 2FZ09090 | LABEL CASSETTE OPERATION 1 | 1 | 1 | 1 | 1 |
| ⊙ | 23 | •302FZ09101 | 2FZ09101 | LABEL BYPASS OPERATION | 1 | 1 | 1 | 1 |
| | 24 | •302FZ09111 | 2FZ09111 | LABEL CURSOR OPERATION | 1 | 1 | 1 | 1 |
| ⊙ | 25 | •302FZ09120 | 2FZ09120 | SPONGE FRONT | 1 | 1 | 1 | 1 |
| ⊙ | 26 | •302FZ09130 | 2FZ09130 | LABEL PAPER MAX | 1 | 1 | 1 | 1 |
| ⊙ | 27 | •302FZ09141 | 2FZ09141 | LABEL PAPER SIZE R1 | 1 | 1 | 1 | 1 |
| ⊙ | 28 | •302FZ09150 | 2FZ09150 | LABEL PAPER UPPER LIMIT | 1 | 1 | 1 | 1 |
| ⊙ | 29 | •302GR09020 | 2GR09020 | HANDLE CASSETTE 1 | 1 | 1 | 1 | 1 |
| ⊙ | 30 | •302GR09040 | 2GR09040 | HANDLE CASSETTE 2 | 1 | 1 | 1 | 1 |
| | 31 | •302GR09051 | 2GR09051 | LEVER CASSETTE | 1 | 1 | 1 | 1 |
| | 32 | •302GR09060 | 2GR09060 | RAIL CURSOR R | 1 | 1 | 1 | 1 |
| | 33 | •302GR09070 | 2GR09070 | L D PAPER SIZE | 1 | 1 | 1 | 1 |
| | 34 | •302GR09080 | 2GR09080 | RAIL CURSOR A | 1 | 1 | 1 | 1 |
| | 35 | •302GR09090 | 2GR09090 | SUPPORT PLATE | 1 | 1 | 1 | 1 |
| ⊙ | 36 | •302GR09102 | 2GR09102 | FRONT CURSOR CASSETTE | 1 | 1 | 1 | 1 |
| ⊙ | 37 | •302GR09112 | 2GR09112 | REAR CURSOR CASSETTE | 1 | 1 | 1 | 1 |
| | 38 | •302GR09120 | 2GR09120 | SPRING LEVER CASSETTE | 1 | 1 | 1 | 1 |
| | 39 | •302GR09130 | 2GR09130 | SHAFT PULLEY | 2 | 2 | 2 | 2 |
| ⊙ | 40 | •302GR09150 | 2GR09150 | WORK PLATE HANDLE | 1 | 1 | 1 | 1 |
| | 41 | •302GR09160 | 2GR09160 | STOPPER PAPER | 1 | 1 | 1 | 1 |
| | 42 | •302GR09210 | 2GR09210 | SEAL DETECTION PLATE | 1 | 1 | 1 | 1 |
| ⊙ | 43 | •302GR09980 | 2GR09980 | SPACER SIZE PLATE | 1 | 1 | 1 | 1 |
| | 44 | •302GR09990 | 2GR09990 | L FT LOCK | 1 | 1 | 1 | 1 |
| ⊙ | 45 | •302GR34022 | 2GR34022 | LABEL PAPER SIZE | 1 | 1 | 1 | 1 |
| | 46 | •302GR46450 | 2GR46450 | WIRE CASSETTE UNIT | 1 | 1 | 1 | 1 |
| | 47 | •33907170 | | DETECTION PLATE,PAPER SIZE | 1 | 1 | 1 | 1 |
| | 48 | •33907210 | | CUSHION,CASSETTE WORK PLATE | 2 | 2 | 2 | 2 |
| | 49 | •34907150 | | PULLEY,CASSETTE | 2 | 2 | 2 | 2 |
| | 50 | •3CY06030 | | RETA NER M4 | 1 | 1 | 1 | 1 |
| ⊙ | 51 | •3CY06090 | | RACK CURSOR | 2 | 2 | 2 | 2 |
| ⊙ | 52 | •3CY06100 | | GEAR 20,CURSOR | 1 | 1 | 1 | 1 |
| ⊙ | 53 | •60907170 | | CUSHION,CASSETTE R | 2 | 2 | 2 | 2 |
| | 54 | •66106080 | | SPRING,PAD | 1 | 1 | 1 | 1 |
| | 55 | •66107100 | | PAD,CASSETTE | 1 | 1 | 1 | 1 |
| ⊙ | 56 | •7YCC08B2046+H01 | YC026110 | CONNECTOR | 1 | 1 | 1 | 1 |
| | 101 | BAA63080 | | +TP TAP-TITE P SCREW M3X08 | | | | |
| | 102 | B4B04080 | | +TP-A SCREW M4X08(TRIVALENT CHROM | | | | |
| | 103 | 5MBTPB3008PW++R | B1A63080 | B ND T.T SCREW(+) / M3 X 8 CRFREE P-T | | | | |
| | 104 | B1B03050 | | +BIND SCREW M3X05(TRIVALENT CHROM | | | | |
| | 105 | 5MBP2514WXSP | E0025250 | SPRING PIN /M2.5 X 14 S-BLK | | | | |

- Parts with "•" are component parts or sub-assemblies of the assembly appearing immediately above them.
- Parts with "⊙" indicate regular maintenance parts.

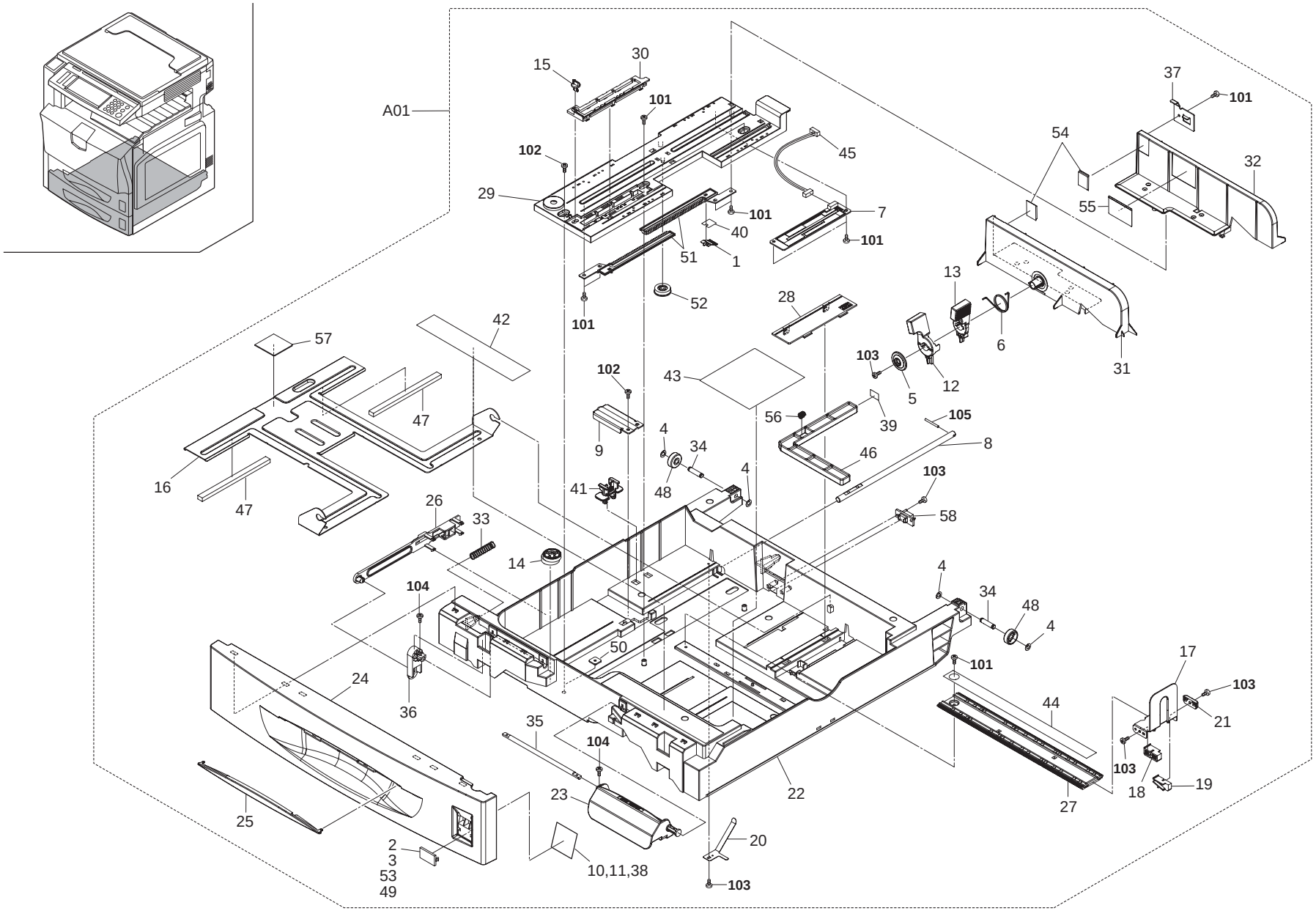
A01
15
30
101
102
29
45
7
101
40
51
1
101
52
101
37
101
54
32
55
13
6
31
28
42
57
103
5
12
102
43
47
56
39
105
8
9
4
34
46
16
47
41
48
4
103
58
26
33
14
104
4
34
48
4
50
101
17
103
24
36
44
21
35
104
103
18
19
23
22
27
25
20
2
3
53
49
10,11,38
103

FIG. 5 Paper Cassette II



| | Ref. No. | Part.No. | Alternative. | Description | Quantity 110 | 120 | 230 | 240 |
|---|---|---|---|---|---|---|---|---|
| ⊙ | A01 | 302GR93082 | 2GR93082 | CT-710 | 1 | 1 | 1 | 1 |
| ⊙ | 1 | •2BC07860 | | TERMINAL,PAPER SIZE DETECTION | 1 | 1 | 1 | 1 |
| ⊙ | 2 | •2BL04310 | | PLATE NUMBER | 1 | 1 | 1 | 1 |
| ⊙ | 3 | •2BL04370 | | PLATE NUMBER 2 | 1 | 1 | 1 | 1 |
| | 4 | •2C904550 | | CUT WASHER 5 | 4 | 4 | 4 | 4 |
| | 5 | •2FB07050 | | PIN CURSOR | 1 | 1 | 1 | 1 |
| | 6 | •2FB07060 | | SPRING CURSOR | 1 | 1 | 1 | 1 |
| ⊙ | 7 | •2FG01020 | | SIZE DETECTION ASS'Y | 1 | 1 | 1 | 1 |
| | 8 | •302AR07041 | 2AR07041 | SHAFT,WORK PLATE | 1 | 1 | 1 | 1 |
| | 9 | •302BC06091 | 2BC06091 | WORK PLATE,LIFT CASSETTE | 1 | 1 | 1 | 1 |
| ⊙ | 10 | •302FB05200 | 2FB05200 | PLATE SIZE C | 1 | 1 | 1 | 1 |
| ⊙ | 11 | •302FB05210 | 2FB05210 | PLATE SIZE IN | 1 | 1 | 1 | 1 |
| | 12 | •302FB07032 | 2FB07032 | LEVER CURSOR A | 1 | 1 | 1 | 1 |
| | 13 | •302FB07042 | 2FB07042 | LEVER CURSOR B | 1 | 1 | 1 | 1 |
| | 14 | •302FB07340 | 2FB07340 | ADJUST NG PLATE CASSETTE | 1 | 1 | 1 | 1 |
| | 15 | •302FB07420 | 2FB07420 | PIN CASSETTE | 1 | 1 | 1 | 1 |
| | 16 | •302FG07091 | 2FG07091 | BASE CASSETTE | 1 | 1 | 1 | 1 |
| ⊙ | 17 | •302FG07151 | 2FG07151 | CURSOR C CASSETTE | 1 | 1 | 1 | 1 |
| ⊙ | 18 | •302FG07170 | 2FG07170 | FRONT GUIDE C,CURSOR | 1 | 1 | 1 | 1 |
| ⊙ | 19 | •302FG07180 | 2FG07180 | REAR GUIDE C,CURSOR | 1 | 1 | 1 | 1 |
| | 20 | •302FG07200 | 2FG07200 | GROUND PLATE,CASSETTE | 1 | 1 | 1 | 1 |
| ⊙ | 21 | •302FG07230 | 2FG07230 | STOPPER,TRAIL NG EDGE DETECTION | 1 | 1 | 1 | 1 |
| | 22 | •302GR09011 | 2GR09011 | CASSETTE | 1 | 1 | 1 | 1 |
| ⊙ | 23 | •302GR09020 | 2GR09020 | HANDLE CASSETTE 1 | 1 | 1 | 1 | 1 |
| ⊙ | 24 | •302GR09030 | 2GR09030 | COVER CASSETTE | 1 | 1 | 1 | 1 |
| ⊙ | 25 | •302GR09040 | 2GR09040 | HANDLE CASSETTE 2 | 1 | 1 | 1 | 1 |
| | 26 | •302GR09051 | 2GR09051 | LEVER CASSETTE | 1 | 1 | 1 | 1 |
| | 27 | •302GR09060 | 2GR09060 | RAIL CURSOR R | 1 | 1 | 1 | 1 |
| | 28 | •302GR09070 | 2GR09070 | L D PAPER SIZE | 1 | 1 | 1 | 1 |
| | 29 | •302GR09080 | 2GR09080 | RAIL CURSOR A | 1 | 1 | 1 | 1 |
| | 30 | •302GR09090 | 2GR09090 | SUPPORT PLATE | 1 | 1 | 1 | 1 |
| ⊙ | 31 | •302GR09102 | 2GR09102 | FRONT CURSOR CASSETTE | 1 | 1 | 1 | 1 |
| ⊙ | 32 | •302GR09112 | 2GR09112 | REAR CURSOR CASSETTE | 1 | 1 | 1 | 1 |
| | 33 | •302GR09120 | 2GR09120 | SPRING LEVER CASSETTE | 1 | 1 | 1 | 1 |
| | 34 | •302GR09130 | 2GR09130 | SHAFT PULLEY | 2 | 2 | 2 | 2 |
| ⊙ | 35 | •302GR09140 | 2GR09140 | SHAFT HANDLE | 1 | 1 | 1 | 1 |
| ⊙ | 36 | •302GR09150 | 2GR09150 | WORK PLATE HANDLE | 1 | 1 | 1 | 1 |
| | 37 | •302GR09160 | 2GR09160 | STOPPER PAPER | 1 | 1 | 1 | 1 |
| ⊙ | 38 | •302GR09201 | 2GR09201 | PLATE SIZE INCH | 1 | 1 | 1 | 1 |
| | 39 | •302GR09210 | 2GR09210 | SEAL DETECTION PLATE | 1 | 1 | 1 | 1 |
| ⊙ | 40 | •302GR09980 | 2GR09980 | SPACER SIZE PLATE | 1 | 1 | 1 | 1 |
| | 41 | •302GR09990 | 2GR09990 | L FT LOCK | 1 | 1 | 1 | 1 |
| ⊙ | 42 | •302GR34011 | 2GR34011 | LABEL CASSETTE OPERATION | 1 | 1 | 1 | 1 |
| ⊙ | 43 | •302GR34022 | 2GR34022 | LABEL PAPER SIZE | 1 | 1 | 1 | 1 |
| ⊙ | 44 | •302GR34032 | 2GR34032 | LABEL PAPER SIZE R | 1 | 1 | 1 | 1 |
| | 45 | •302GR46450 | 2GR46450 | WIRE CASSETTE UNIT | 1 | 1 | 1 | 1 |
| | 46 | •33907170 | | DETECTION PLATE,PAPER SIZE | 1 | 1 | 1 | 1 |
| | 47 | •33907210 | | CUSHION,CASSETTE WORK PLATE | 2 | 2 | 2 | 2 |
| | 48 | •34907150 | | PULLEY,CASSETTE | 2 | 2 | 2 | 2 |
| ⊙ | 49 | •3CF04060 | | PLATE NUMBER4 | 1 | 1 | 1 | 1 |
| | 50 | •3CY06030 | | RETA NER M4 | 1 | 1 | 1 | 1 |
| ⊙ | 51 | •3CY06090 | | RACK CURSOR | 2 | 2 | 2 | 2 |
| ⊙ | 52 | •3CY06100 | | GEAR 20,CURSOR | 1 | 1 | 1 | 1 |
| ⊙ | 53 | •5MVX321CE001 | 3CF04050 | PLATE NUMBER 3 /3CF0405 A4 | 1 | 1 | 1 | 1 |
| ⊙ | 54 | •60907170 | | CUSHION,CASSETTE R | 2 | 2 | 2 | 2 |
| ⊙ | 55 | •61705110 | | LABEL,PAPER UPPER LIMIT | 1 | 1 | 1 | 1 |
| | 56 | •66106080 | | SPRING,PAD | 1 | 1 | 1 | 1 |
| | 57 | •66107100 | | PAD,CASSETTE | 1 | 1 | 1 | 1 |
| ⊙ | 58 | •7YCC08B2046+H01 | YC026110 | CONNECTOR | 1 | 1 | 1 | 1 |
| | 101 | BAA63080 | | +TP TAP-TITE P SCREW M3X08 | | | | |
| | 102 | B4B04080 | | +TP-A SCREW M4X08(TRIVALENT CHROM | | | | |
| | 103 | 5MBTPB3008PW++R | B1A63080 | B ND T.T SCREW(+) / M3 X 8 CRFREE P-T | | | | |
| | 104 | B1B03050 | | +BIND SCREW M3X05(TRIVALENT CHROM | | | | |
| | 105 | 5MBP2514WXSP | E0025250 | SPRING PIN /M2.5 X 14 S-BLK | | | | |

- Parts with "•" are component parts or sub-assemblies of the assembly appearing immediately above them.
- Parts with "⊙" indicate regular maintenance parts.

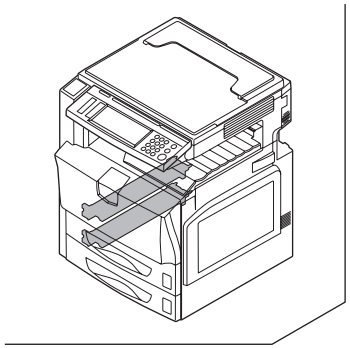

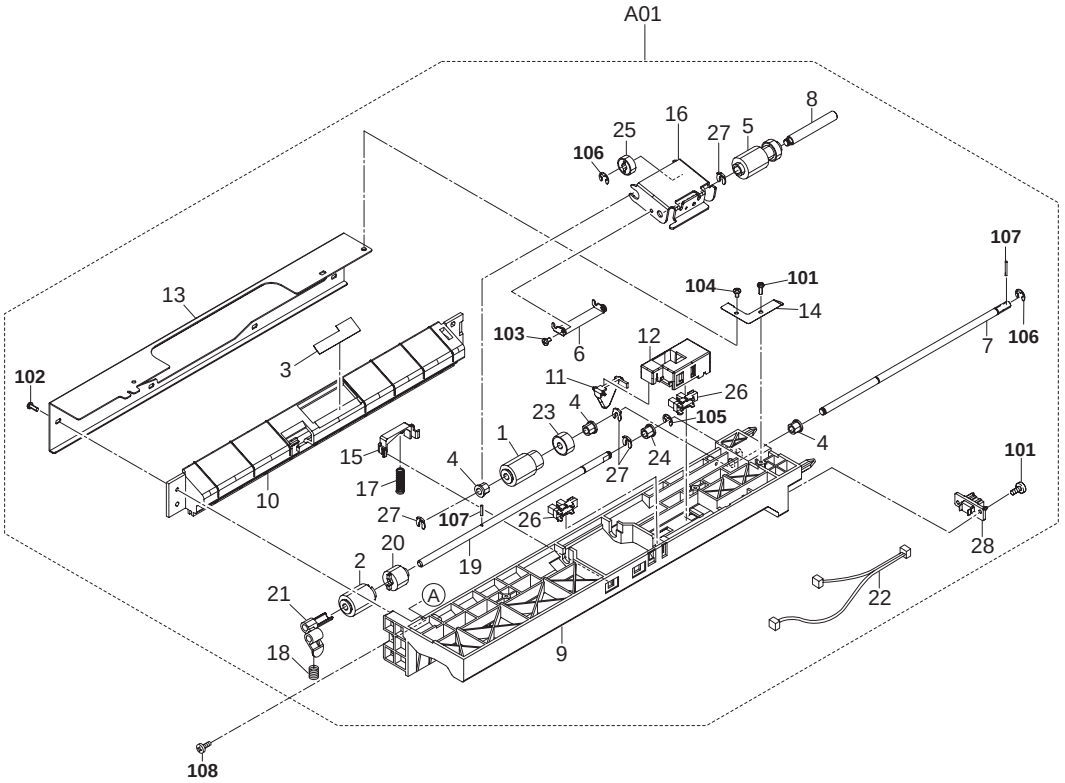
A01
1
2
3
4
5
6
7
8
9
10
11
12
13
14
15
16
17
18
19
20
21
22
23
24
25
26
27
28
101
102
103
104
105
106
107
108
A

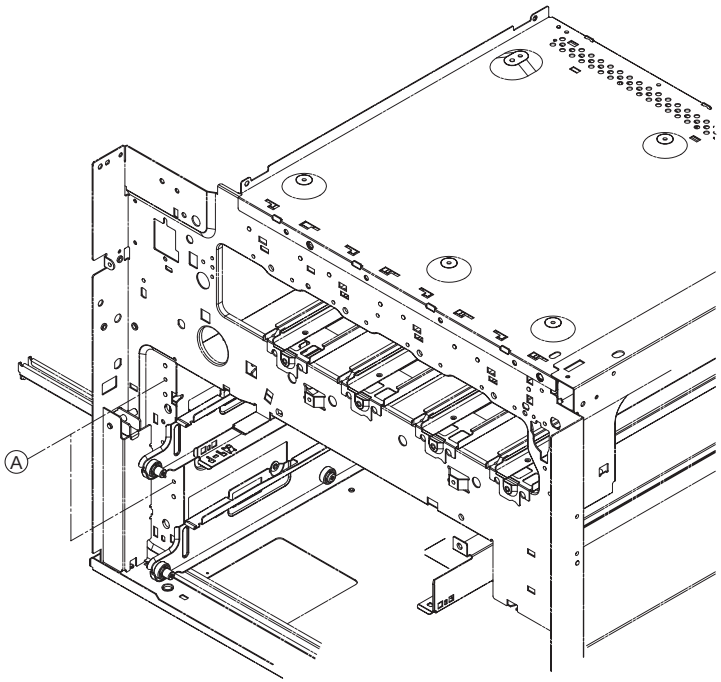
A

FIG. 6 Primary Unit

| | Ref. No. | Part.No. | Alternative. | Description | Quantity 110 | 120 | 230 | 240 |
|---|---|---|---|---|---|---|---|---|
| ⊙ | A01 | 302FZ93321 | 2FZ93321 | PARTS FE-820 | 2 | 2 | 2 | 2 |
| ⊙ | 1 | •2AR07220 | | PULLEY,PAPER FEED | 2 | 2 | 2 | 2 |
| ⊙ | 2 | •2AR07230 | | PULLEY,SEPARATION | 2 | 2 | 2 | 2 |
| | 3 | •2AR07660 | | GU DE F LM,SEPARATION PULLEY | 2 | 2 | 2 | 2 |
| | 4 | •2BC06520 | | BUSH NG 6,REGISTRATION | 6 | 6 | 6 | 6 |
| ⊙ | 5 | •2BJ06010 | | PULLEY FEED A | 2 | 2 | 2 | 2 |
| | 6 | •2BL07900 | | PLATE LEADING FEED | 2 | 2 | 2 | 2 |
| | 7 | •302AR07251 | 2AR07251 | SHAFT,PAPER FEED | 2 | 2 | 2 | 2 |
| | 8 | •302AR07271 | 2AR07271 | SHAFT,LEADING FEED | 2 | 2 | 2 | 2 |
| | 9 | •302FG07251 | 2FG07251 | UPPER HOUS NG,PAPER FEED | 2 | 2 | 2 | 2 |
| | 10 | •302FG07260 | 2FG07260 | LOWER HOUSING,PAPER FEED | 2 | 2 | 2 | 2 |
| | 11 | •302FG07290 | 2FG07290 | ACTUATOR,PAPER EMPTY | 2 | 2 | 2 | 2 |
| | 12 | •302FG07300 | 2FG07300 | HOLDER,ACTUATOR | 2 | 2 | 2 | 2 |
| | 13 | •302FG07310 | 2FG07310 | REINFORCEMENT PRIMARY PAPER FEED | 2 | 2 | 2 | 2 |
| | 14 | •302FG07330 | 2FG07330 | GROUND PLATE,PRIMARY PAPER FEED | 2 | 2 | 2 | 2 |
| | 15 | •302GR06060 | 2GR06060 | HOLDER PICK | 2 | 2 | 2 | 2 |
| | 16 | •302GR06070 | 2GR06070 | SUPPORT PLATE FEED | 2 | 2 | 2 | 2 |
| | 17 | •302GR06080 | 2GR06080 | SPRING PICK | 2 | 2 | 2 | 2 |
| | 18 | •302GR06091 | 2GR06091 | SPRING SEPARATION | 2 | 2 | 2 | 2 |
| | 19 | •302GR06101 | 2GR06101 | SHAFT SEPARATION | 2 | 2 | 2 | 2 |
| ⊙ | 20 | •302GR06110 | 2GR06110 | TORQUE LIMITER 360 | 2 | 2 | 2 | 2 |
| | 21 | •302GR06201 | 2GR06201 | LEVER SEPARATION RELEASE | 2 | 2 | 2 | 2 |
| | 22 | •302GR46430 | 2GR46430 | WIRE PRIMARY FEED UNIT1 | 2 | 2 | 2 | 2 |
| ⊙ | 23 | •33906160 | | GEAR 16,PAPER FEED | 2 | 2 | 2 | 2 |
| | 24 | •34806040 | | LOWER BUSHING,PAPER FEED | 2 | 2 | 2 | 2 |
| ⊙ | 25 | •34922420 | | GEAR 15 | 2 | 2 | 2 | 2 |
| ⊙ | 26 | •5FNXGP1A73A++02 | 2DC27180 | PT.SENSOR GP1A73AJ00/ BK | 4 | 4 | 4 | 4 |
| | 27 | •5MVX111DN003 | 2A806250 | R NG STOPPER /A-49 FEED A4 | 8 | 8 | 8 | 8 |
| ⊙ | 28 | •7YCC08B2046+H01 | YC026110 | CONNECTOR | 2 | 2 | 2 | 2 |

| | Ref. No. | Part.No. | Alternative. | Description | Quantity 110 | 120 | 230 | 240 |
|---|---|---|---|---|---|---|---|---|
| | 101 | 5MBTPB3008PW++R | B1A63080 | B ND T.T SCREW(+) / M3 X 8 CRFREE P-T | | | | |
| | 102 | 5MBTPB3010PW++R | B1B63100 | B ND T.T SCREW(+) / M3 X 10 CRFREE P-T | | | | |
| | 103 | B1B03040 | | +BIND SCREW M3X04(TRIVALENT CHROM | | | | |
| | 104 | B1B03050 | | +BIND SCREW M3X05(TRIVALENT CHROM | | | | |
| | 105 | D1A00400 | | STOP R NG E-4(TRIVALENT CHROMAT NG | | | | |
| | 106 | D1A00500 | | STOP R NG E-5(TRIVALENT CHROMAT NG | | | | |
| | 107 | E5120080 | | SPRING PIN H7A 2X8 SUS | | | | |
| | 108 | B1A54080 | | +BIND TAP-TITE S SCREW M4X08 | | | | |

- Parts with "•" are component parts or sub-assemblies of the assembly appearing immediately above them.
- Parts with "⊙" indicate regular maintenance parts.

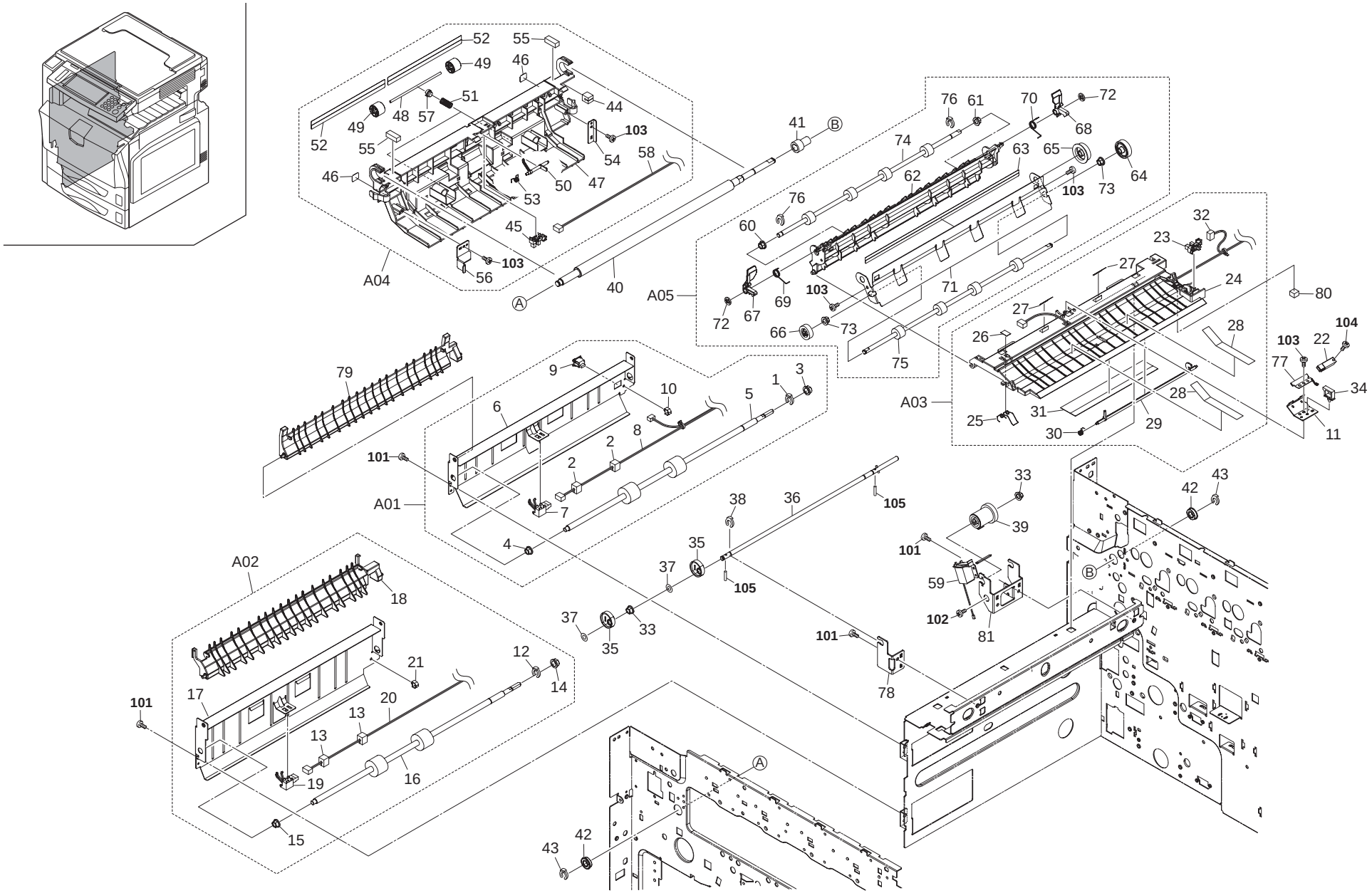
A01
A02
A03
A04
A05
101
102
103
104
105

FIG. 7 Paper Conveying I



| | Ref. No. | Part.No. | Alternative. | Description | Quantity 110 | 120 | 230 | 240 |
|---|---|---|---|---|---|---|---|---|
| ⊙ | A01 | 302FZ94200 | 2FZ94200 | PARTS,GUIDE FEED LOW 1ST ASS'Y SP | 1 | 1 | 1 | 1 |
| | 1 | •2BC06910 | | STOPPER 6 | 1 | 1 | 1 | 1 |
| | 2 | •2BG06500 | | SPONGE W RE A | 2 | 2 | 2 | 2 |
| | 3 | •2BG22950 | | BUSH 8 EW | 1 | 1 | 1 | 1 |
| | 4 | •2BG22960 | | BUSH 6 | 1 | 1 | 1 | 1 |
| ⊙ | 5 | •302FZ22750 | 2FZ22750 | ROLLER FEED LOW | 1 | 1 | 1 | 1 |
| | 6 | •302FZ22800 | 2FZ22800 | GU DE FEED LOW 1ST | 1 | 1 | 1 | 1 |
| ⊙ | 7 | •302FZ44080 | 2FZ44080 | SWITCH CONVEYING | 1 | 1 | 1 | 1 |
| | 8 | •302FZ46540 | 2FZ46540 | WIRE FEED SW UP | 1 | 1 | 1 | 1 |
| | 9 | •35927420 | | SWITCH,SIZE | 1 | 1 | 1 | 1 |
| | 10 | •7YZM610007++H01 | YZ023340 | ACCESS.SADDLE | 1 | 1 | 1 | 1 |
| | 11 | 302FZ22940 | 2FZ22940 | PLATE SENS MIDDLE | 1 | 1 | 1 | 1 |
| ⊙ | A02 | 302FZ94210 | 2FZ94210 | PARTS,GUIDE FEED LOW 2ND ASS'Y SP | 1 | 1 | 1 | 1 |
| | 12 | •2BC06910 | | STOPPER 6 | 1 | 1 | 1 | 1 |
| | 13 | •2BG06500 | | SPONGE W RE A | 2 | 2 | 2 | 2 |
| | 14 | •2BG22950 | | BUSH 8 EW | 1 | 1 | 1 | 1 |
| | 15 | •2BG22960 | | BUSH 6 | 1 | 1 | 1 | 1 |
| ⊙ | 16 | •302FZ22750 | 2FZ22750 | ROLLER FEED LOW | 1 | 1 | 1 | 1 |
| | 17 | •302FZ22810 | 2FZ22810 | GU DE FEED LOW 2ND | 1 | 1 | 1 | 1 |
| ⊙ | 18 | •302FZ22830 | 2FZ22830 | GU DE FEED UP 2ND | 1 | 1 | 1 | 1 |
| ⊙ | 19 | •302FZ44080 | 2FZ44080 | SWITCH CONVEYING | 1 | 1 | 1 | 1 |
| | 20 | •302FZ46550 | 2FZ46550 | WIRE FEED SW LOW | 1 | 1 | 1 | 1 |
| | 21 | •7YZM610007++H01 | YZ023340 | ACCESS.SADDLE | 1 | 1 | 1 | 1 |
| ⊙ | 22 | 302FZ44090 | 2FZ44090 | SWITCH REGISTRATION | 1 | 1 | 1 | 1 |
| ⊙ | A03 | 302FZ94220 | 2FZ94220 | PARTS,GUIDE MIDDLE LOW ASS'Y SP | 1 | 1 | 1 | 1 |
| ⊙ | 23 | •2C927210 | | SENSOR 248NL1 | 1 | 1 | 1 | 1 |
| ⊙ | 24 | •302FZ22591 | 2FZ22591 | GU DE MIDDLE LOW | 1 | 1 | 1 | 1 |
| | 25 | •302FZ22630 | 2FZ22630 | SPRING EARTH MIDDLE | 1 | 1 | 1 | 1 |
| | 26 | •302FZ22760 | 2FZ22760 | STOPPER EARTH MIDDLE | 1 | 1 | 1 | 1 |
| | 27 | •302FZ22781 | 2FZ22781 | SHEET GUIDE LOW A | 2 | 2 | 2 | 2 |
| | 28 | •302FZ22790 | 2FZ22790 | SHEET GUIDE LOW B | 2 | 2 | 2 | 2 |
| ⊙ | 29 | •302FZ22840 | 2FZ22840 | ACTUATOR MID BYPASS | 1 | 1 | 1 | 1 |
| | 30 | •302FZ22870 | 2FZ22870 | SPRING ACTUATOR BYPASS | 1 | 1 | 1 | 1 |
| ⊙ | 31 | •302FZ22950 | 2FZ22950 | SHEET SENS MIDDLE | 1 | 1 | 1 | 1 |
| | 32 | •302FZ46330 | 2FZ46330 | WIRE FEED JAM | 1 | 1 | 1 | 1 |
| | 33 | 2BG22960 | | BUSH 6 | 2 | 2 | 2 | 2 |
| | 34 | 7YZM610007++H01 | YZ023340 | ACCESS.SADDLE | 1 | 1 | 1 | 1 |
| ⊙ | 35 | 302FZ02671 | 2FZ02671 | CAM SHAFT BLADE | 2 | 2 | 2 | 2 |
| | 36 | 302FZ02682 | 2FZ02682 | SHAFT CLN LSU | 1 | 1 | 1 | 1 |
| | 37 | 2BG22990 | | CUT WASHER 4 | 2 | 2 | 2 | 2 |
| | 38 | 5MVX111DN003 | 2A806250 | R NG STOPPER /A-49 FEED A4 | 1 | 1 | 1 | 1 |
| | 39 | 302FZ02741 | 2FZ02741 | CLUTCH LSU CLEANING | 1 | 1 | 1 | 1 |
| ⊙ | 40 | 302FZ22040 | 2FZ22040 | ROLLER REGIST R | 1 | 1 | 1 | 1 |
| ⊙ | 41 | 302FZ22120 | 2FZ22120 | GEAR REGIST Z18H | 1 | 1 | 1 | 1 |
| | 42 | 302FZ21300 | 2FZ21300 | BEARING 688AZZ | 2 | 2 | 2 | 2 |
| | 43 | 2BC06910 | | STOPPER 6 | 2 | 2 | 2 | 2 |
| ⊙ | A04 | 302FZ93430 | 2FZ93430 | PARTS GUIDE FEED R ASSY | 1 | 1 | 1 | 1 |
| | 44 | •2BG06500 | | SPONGE W RE A | 1 | 1 | 1 | 1 |
| ⊙ | 45 | •2C927210 | | SENSOR 248NL1 | 1 | 1 | 1 | 1 |
| ⊙ | 46 | •302FZ07340 | 2FZ07340 | LABEL JAM BYPASS B1 | 2 | 2 | 2 | 2 |
| ⊙ | 47 | •302FZ22084 | 2FZ22084 | GUIDE FEED R | 1 | 1 | 1 | 1 |
| | 48 | •302FZ22140 | 2FZ22140 | SHAFT MIDDLE L | 2 | 2 | 2 | 2 |
| ⊙ | 49 | •302FZ22150 | 2FZ22150 | PULLEY MIDDLE | 4 | 4 | 4 | 4 |
| ⊙ | 50 | •302FZ22160 | 2FZ22160 | ACTUATOR REGIST | 1 | 1 | 1 | 1 |
| | 51 | •302FZ22341 | 2FZ22341 | SPRING MIDDLE | 2 | 2 | 2 | 2 |
| ⊙ | 52 | •302FZ22380 | 2FZ22380 | SHEET REGIST | 2 | 2 | 2 | 2 |
| | 53 | •302FZ22620 | 2FZ22620 | SPRING ACTUATOR REGIST | 1 | 1 | 1 | 1 |
| | 54 | •302FZ24110 | 2FZ24110 | PLATE GUIDE M DDLE R | 1 | 1 | 1 | 1 |
| ⊙ | 55 | •302FZ24160 | 2FZ24160 | PAD REGIST | 2 | 2 | 2 | 2 |
| | 56 | •302FZ24220 | 2FZ24220 | PLATE GUIDE M DDLE F | 1 | 1 | 1 | 1 |
| | 57 | •302FZ24600 | 2FZ24600 | BUSH SP | 2 | 2 | 2 | 2 |
| | 58 | •302FZ46350 | 2FZ46350 | WIRE REG JAM | 1 | 1 | 1 | 1 |
| ⊙ | 59 | 302FZ44050 | 2FZ44050 | SOLENO D LSU CLN | 1 | 1 | 1 | 1 |
| ⊙ | A05 | 302FZ94240 | 2FZ94240 | PARTS,GUIDE MIDDLE R ASS'Y SP | 1 | 1 | 1 | 1 |
| | 60 | •2BG22960 | | BUSH 6 | 1 | 1 | 1 | 1 |
| | 61 | •2BG22970 | | BUSH 6 EW | 1 | 1 | 1 | 1 |
| ⊙ | 62 | •302FZ22060 | 2FZ22060 | GUIDE MIDDLE R | 1 | 1 | 1 | 1 |
| ⊙ | 63 | •302FZ22460 | 2FZ22460 | SHEET MIDDLE BYPASS | 1 | 1 | 1 | 1 |
| ⊙ | 64 | •302FZ22470 | 2FZ22470 | GEAR MIDDLE A | 1 | 1 | 1 | 1 |
| ⊙ | 65 | •302FZ22481 | 2FZ22481 | GEAR MIDDLE B | 1 | 1 | 1 | 1 |
| ⊙ | 66 | •302FZ22490 | 2FZ22490 | GEAR MIDDLE Z19S | 1 | 1 | 1 | 1 |
| ⊙ | 67 | •302FZ22500 | 2FZ22500 | LEVER MIDDLE F | 1 | 1 | 1 | 1 |
| ⊙ | 68 | •302FZ22520 | 2FZ22520 | LEVER MIDDLE R | 1 | 1 | 1 | 1 |
| | 69 | •302FZ22600 | 2FZ22600 | SPRING M D LEVER F | 1 | 1 | 1 | 1 |
| | 70 | •302FZ22610 | 2FZ22610 | SPRING M D LEVER R | 1 | 1 | 1 | 1 |
| ⊙ | 71 | •302FZ22860 | 2FZ22860 | GUIDE MIDDLE BYPASS | 1 | 1 | 1 | 1 |
| | 72 | •302FZ22980 | 2FZ22980 | STOPPER MID | 2 | 2 | 2 | 2 |
| | 73 | •302FZ24090 | 2FZ24090 | BUSH TC EW | 2 | 2 | 2 | 2 |
| ⊙ | 74 | •302FZ94540 | 2FZ94540 | PARTS,ROLLER M DDLE R SP | 1 | 1 | 1 | 1 |
| ⊙ | 75 | •302FZ94550 | 2FZ94550 | PARTS,ROLLER MIDDLE BYPASS SP | 1 | 1 | 1 | 1 |
| | 76 | •5MVX111DN003 | 2A806250 | RING STOPPER /A-49 FEED A4 | 2 | 2 | 2 | 2 |
| | 77 | 302FZ22690 | 2FZ22690 | PLATE EARTH MID SENS | 1 | 1 | 1 | 1 |
| | 78 | 302FZ02700 | 2FZ02700 | MOUNT SHAFT CAM | 1 | 1 | 1 | 1 |
| ⊙ | 79 | 302FZ22820 | 2FZ22820 | GUIDE FEED UP 1ST | 1 | 1 | 1 | 1 |
| | 80 | 302FZ22700 | 2FZ22700 | STOPPER CORD | 1 | 1 | 1 | 1 |
| | 81 | 302FZ02690 | 2FZ02690 | MOUNT SOLENOID | 1 | 1 | 1 | 1 |
| | 101 | B1A54080 | | +BIND TAP-TITE S SCREW M4X08 | | | | |
| | 102 | 5MBTPB3006TW++R | B1A53060 | B ND T.T SCREW(+) / M3 X 6 CRFREE S-T | | | | |
| | 103 | 5MBTPB3008PW++R | B1A63080 | B ND T.T SCREW(+) / M3 X 8 CRFREE P-T | | | | |
| | 104 | 5MBTPB3014TW++R | B1A53140 | B ND T.T SCREW(+) / M3 X 14 CRFREE S-T | | | | |
| | 105 | 5MBP2012WPLD | E5120120 | PARALLEL P N / M2 X 12 SUS-DP | | | | |

- Parts with "•" are component parts or sub-assemblies of the assembly appearing immediately above them.
- Parts with "⊙" indicate regular maintenance parts.

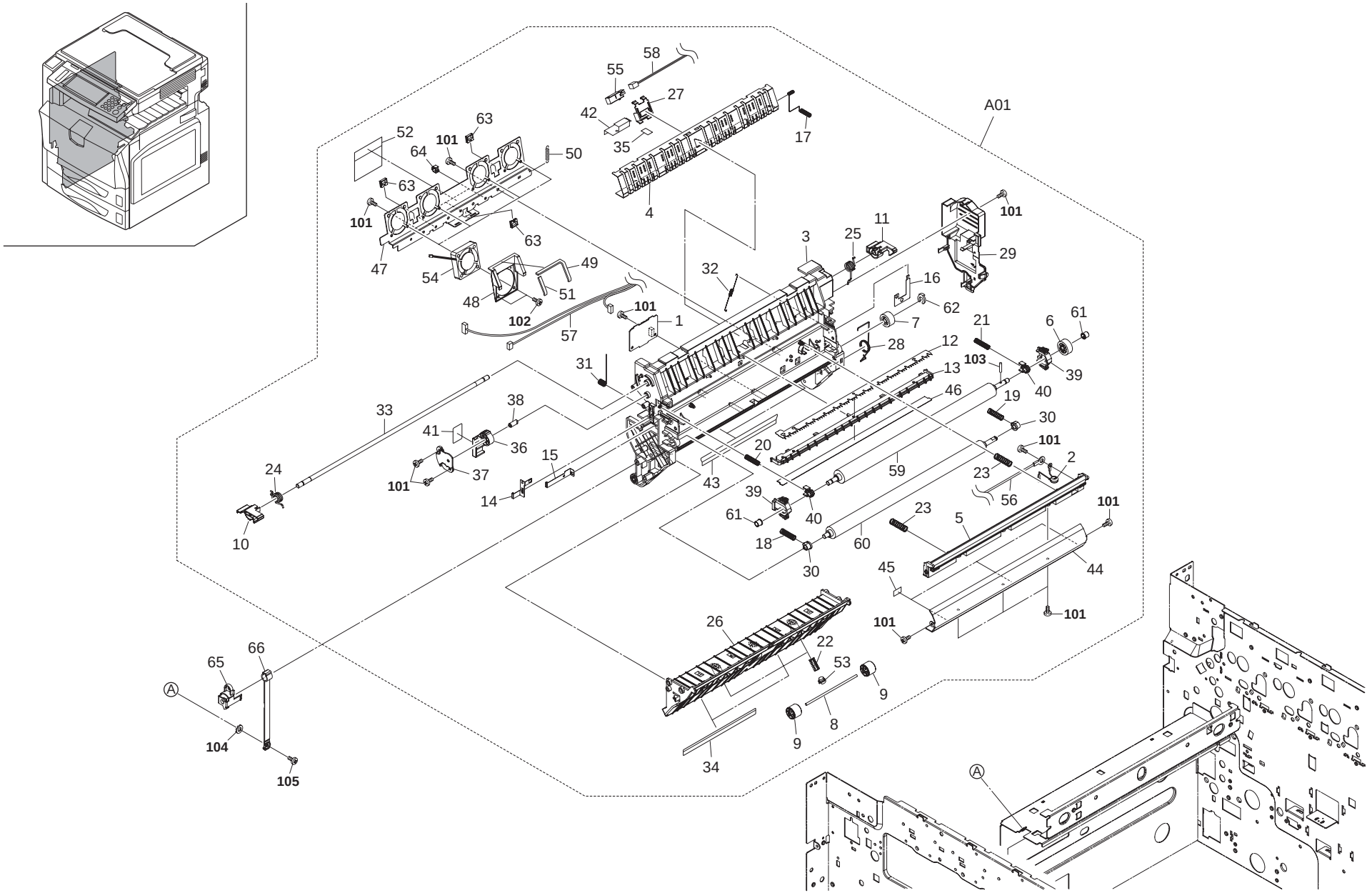
A01
58
55
27
42
35
17
4
52
101
63
64
50
63
101
63
47
54
49
48
51
102
57
101
1
3
25
11
101
29
32
16
62
7
28
21
6
61
12
103
39
13
40
46
19
30
31
33
38
41
36
37
101
15
14
24
10
20
43
59
101
2
23
56
39
40
61
18
30
60
23
5
101
44
45
101
101
26
22
53
9
8
9
34
65
66
A
104
105
A

## FIG. 8 Paper Conveying II

| | Ref. No. | Part.No. | Alternative. | Description | Quantity 110 | 120 | 230 | 240 |
|---|---|---|---|---|---|---|---|---|
| ⊙ | A01 | 302FZ93510 | 2FZ93510 | PARTS FEED UNIT ASSY | 1 | 1 | 1 | 1 |
| ⊙ | 1 | •302FZ01300 | 2FZ01300 | PRINTED W.BOARD FAN | 1 | 1 | 1 | 1 |
| ⊙ | 2 | •302FZ01310 | 2FZ01310 | VARISTOR TC ASS'Y | 1 | 1 | 1 | 1 |
| | 3 | •302FZ22012 | 2FZ22012 | BASE CONVEYING | 1 | 1 | 1 | 1 |
| | 4 | •302FZ22071 | 2FZ22071 | GU DE CONVEYING | 1 | 1 | 1 | 1 |
| ⊙ | 5 | •302FZ22090 | 2FZ22090 | GU DE TC L | 1 | 1 | 1 | 1 |
| ⊙ | 6 | •302FZ22110 | 2FZ22110 | GEAR TC Z24H | 1 | 1 | 1 | 1 |
| ⊙ | 7 | •302FZ22130 | 2FZ22130 | GEAR REGIST Z22H | 1 | 1 | 1 | 1 |
| | 8 | •302FZ22140 | 2FZ22140 | SHAFT M DDLE L | 2 | 2 | 2 | 2 |
| ⊙ | 9 | •302FZ22150 | 2FZ22150 | PULLEY MIDDLE | 4 | 4 | 4 | 4 |
| ⊙ | 10 | •302FZ22170 | 2FZ22170 | HOOK CONVEYING F | 1 | 1 | 1 | 1 |
| ⊙ | 11 | •302FZ22180 | 2FZ22180 | HOOK CONVEYING R | 1 | 1 | 1 | 1 |
| | 12 | •302FZ22201 | 2FZ22201 | PLATE DISCHARGER | 1 | 1 | 1 | 1 |
| | 13 | •302FZ22211 | 2FZ22211 | HOLDER DISCHARGER | 1 | 1 | 1 | 1 |
| | 14 | •302FZ22220 | 2FZ22220 | CONTACT TRANSFER | 1 | 1 | 1 | 1 |
| | 15 | •302FZ22230 | 2FZ22230 | CONTACT DISCHARGE | 1 | 1 | 1 | 1 |
| | 16 | •302FZ22241 | 2FZ22241 | PLATE EARTH REGIST | 1 | 1 | 1 | 1 |
| | 17 | •302FZ22250 | 2FZ22250 | SPRING EARTH CONVEYING | 1 | 1 | 1 | 1 |
| | 18 | •302FZ22300 | 2FZ22300 | SPRING REGIST F | 1 | 1 | 1 | 1 |
| | 19 | •302FZ22310 | 2FZ22310 | SPRING REGIST R | 1 | 1 | 1 | 1 |
| | 20 | •302FZ22320 | 2FZ22320 | SPRING TRANSFER F | 1 | 1 | 1 | 1 |
| | 21 | •302FZ22330 | 2FZ22330 | SPRING TRANSFER R | 1 | 1 | 1 | 1 |
| | 22 | •302FZ22341 | 2FZ22341 | SPRING MIDDLE | 2 | 2 | 2 | 2 |
| | 23 | •302FZ22350 | 2FZ22350 | SPRING GUIDE TRANSFER | 2 | 2 | 2 | 2 |
| | 24 | •302FZ22360 | 2FZ22360 | SPRING CONVEY NG F | 1 | 1 | 1 | 1 |
| | 25 | •302FZ22370 | 2FZ22370 | SPRING CONVEY NG R | 1 | 1 | 1 | 1 |
| | 26 | •302FZ22400 | 2FZ22400 | GU DE MIDDLE L | 1 | 1 | 1 | 1 |
| | 27 | •302FZ22411 | 2FZ22411 | HOLDER SENS FEED | 1 | 1 | 1 | 1 |
| | 28 | •302FZ22540 | 2FZ22540 | SPRING EARTH CONVEYING UNIT | 1 | 1 | 1 | 1 |
| | 29 | •302FZ22551 | 2FZ22551 | COVER PWB FEED | 1 | 1 | 1 | 1 |
| | 30 | •302FZ22560 | 2FZ22560 | BUSH REGIST | 2 | 2 | 2 | 2 |
| | 31 | •302FZ22570 | 2FZ22570 | SPRING CONTACT DISCHARGER | 1 | 1 | 1 | 1 |
| | 32 | •302FZ22580 | 2FZ22580 | SPRING LEFT CONV | 1 | 1 | 1 | 1 |
| | 33 | •302FZ22660 | 2FZ22660 | SHAFT HOOK CONVEYING | 1 | 1 | 1 | 1 |
| | 34 | •302FZ22720 | 2FZ22720 | SHEET MIDDLE L | 2 | 2 | 2 | 2 |
| | 35 | •302FZ22760 | 2FZ22760 | STOPPER EARTH MIDDLE | 1 | 1 | 1 | 1 |
| | 36 | •302FZ22880 | 2FZ22880 | LEVER CONVEYING | 1 | 1 | 1 | 1 |
| | 37 | •302FZ22890 | 2FZ22890 | COVER LEVER CONVEY | 1 | 1 | 1 | 1 |
| | 38 | •302FZ22900 | 2FZ22900 | SHAFT LEVER CONVEY | 1 | 1 | 1 | 1 |
| | 39 | •302FZ22911 | 2FZ22911 | STOPPER BUSH TRANSFER | 2 | 2 | 2 | 2 |
| | 40 | •302FZ22920 | 2FZ22920 | BUSH TRANSFER B F | 2 | 2 | 2 | 2 |
| | 41 | •302FZ22960 | 2FZ22960 | LABEL JAM FEED A1 | 1 | 1 | 1 | 1 |
| | 42 | •302FZ22991 | 2FZ22991 | SHEET SENS CONVEY | 1 | 1 | 1 | 1 |
| | 43 | •302FZ24010 | 2FZ24010 | SHEET REGIST L | 2 | 2 | 2 | 2 |
| | 44 | •302FZ24100 | 2FZ24100 | GU DE TC UP | 1 | 1 | 1 | 1 |
| | 45 | •302FZ24140 | 2FZ24140 | SPACER TC GUIDE | 3 | 3 | 3 | 3 |
| | 46 | •302FZ24240 | 2FZ24240 | SHEET DISCHARGER | 1 | 1 | 1 | 1 |
| | 47 | •302FZ24500 | 2FZ24500 | PLATE CONV FAN | 1 | 1 | 1 | 1 |
| | 48 | •302FZ24510 | 2FZ24510 | DUCT CONV UP | 4 | 4 | 4 | 4 |
| | 49 | •302FZ24530 | 2FZ24530 | SEAL FAN CONV | 4 | 4 | 4 | 4 |
| | 50 | •302FZ24540 | 2FZ24540 | SPRING EARTH FAN | 1 | 1 | 1 | 1 |
| | 51 | •302FZ24550 | 2FZ24550 | SEAL FAN CONV B | 4 | 4 | 4 | 4 |
| | 52 | •302FZ24560 | 2FZ24560 | SHEET FAN PWD | 1 | 1 | 1 | 1 |
| | 53 | •302FZ24600 | 2FZ24600 | BUSH SP | 2 | 2 | 2 | 2 |
| ⊙ | 54 | •302FZ44070 | 2FZ44070 | FAN CONVEYING 40 | 4 | 4 | 4 | 4 |
| ⊙ | 55 | •302FZ44090 | 2FZ44090 | SWITCH REGISTRATION | 1 | 1 | 1 | 1 |
| | 56 | •302FZ46861 | 2FZ46861 | WIRE TC GUIDE | 1 | 1 | 1 | 1 |
| | 57 | •302FZ46880 | 2FZ46880 | WIRE FEED J | 1 | 1 | 1 | 1 |
| | 58 | •302FZ46890 | 2FZ46890 | WIRE FEED PI | 1 | 1 | 1 | 1 |
| ⊙ | 59 | •302FZ94510 | 2FZ94510 | PARTS,ROLLER TRANSFER SP | 1 | 1 | 1 | 1 |
| ⊙ | 60 | •302FZ94520 | 2FZ94520 | PARTS,ROLLER REGIST L SP | 1 | 1 | 1 | 1 |
| ⊙ | 61 | •302GR22110 | 2GR22110 | COLLAR TRANS ROLLER | 2 | 2 | 2 | 2 |
| | 62 | •5MVX111DN003 | 2A806250 | RING STOPPER /A-49 FEED A4 | 1 | 1 | 1 | 1 |
| | 63 | •7YZM210006++H01 | YZ038000 | ACCESS.EDG NG | 3 | 3 | 3 | 3 |
| | 64 | •7YZM610007++H01 | YZ023340 | ACCESS.SADDLE | 3 | 3 | 3 | 3 |
| | 65 | 302FZ22770 | 2FZ22770 | STOPPER BAND CONVEY | 1 | 1 | 1 | 1 |
| | 66 | 302FZ24060 | 2FZ24060 | BAND CONVEYING | 1 | 1 | 1 | 1 |
| | 101 | 5MBTPB3008PW++R | B1A63080 | B ND T.T SCREW(+) / M3 X 8 CRFREE P-T | | | | |
| | 102 | 7BB100316H | BB040730 | +BIND TAP-TITE S SCREW M3X16 CRFREE | | | | |
| | 103 | E5120140 | | PARALLEL P N H7A 2X14 SUS | | | | |
| | 104 | 7BC60050A060H01 | BC048710 | TOOTHED LOCK WASHER M5X10X0.6T | | | | |
| | 105 | B1A54080 | | +BIND TAP-TITE S SCREW M4X08 | | | | |

- Parts with "•" are component parts or sub-assemblies of the assembly appearing immediately above them.
- Parts with "⊙" indicate regular maintenance parts.

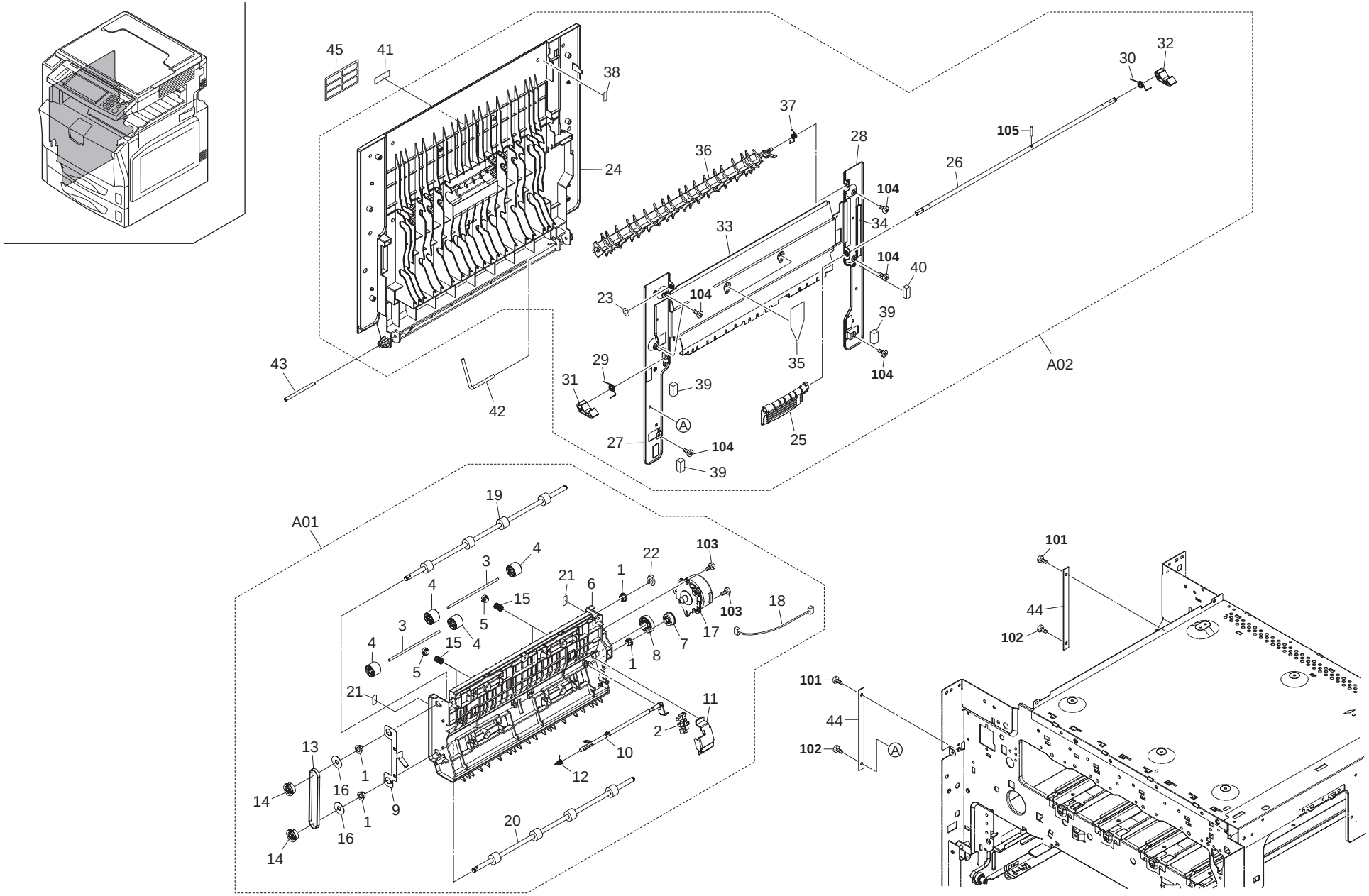
45
41
38
24
37
36
28
30
32
105
26
104
34
33
104
40
23
104
39
35
104
A02
43
29
31
39
42
A
27
104
25
39
A01
19
4
3
22
103
21
6
1
4
15
5
103
18
3
15
4
17
4
7
8
1
5
21
11
2
13
10
1
12
14
16
9
1
20
16
14
101
44
102
101
44
102
A

## FIG. 9 Paper Conveying III

| | Ref. No. | Part.No. | Alternative. | Description | Quantity 110 | 120 | 230 | 240 |
|---|---|---|---|---|---|---|---|---|
| ⊙ | A01 | 302FZ93500 | 2FZ93500 | PARTS DU ASSY | 1 | 1 | 1 | 1 |
| | 1 | •2BG22970 | | BUSH 6 EW | 4 | 4 | 4 | 4 |
| ⊙ | 2 | •2C927210 | | SENSOR 248NL1 | 1 | 1 | 1 | 1 |
| | 3 | •302FZ22140 | 2FZ22140 | SHAFT M DDLE L | 4 | 4 | 4 | 4 |
| ⊙ | 4 | •302FZ22150 | 2FZ22150 | PULLEY MIDDLE | 8 | 8 | 8 | 8 |
| | 5 | •302FZ24600 | 2FZ24600 | BUSH SP | 4 | 4 | 4 | 4 |
| | 6 | •302FZ29012 | 2FZ29012 | FRAME DU | 1 | 1 | 1 | 1 |
| ⊙ | 7 | •302FZ29040 | 2FZ29040 | GEAR DU Z32S | 1 | 1 | 1 | 1 |
| ⊙ | 8 | •302FZ29050 | 2FZ29050 | GEAR DU DLE | 1 | 1 | 1 | 1 |
| | 9 | •302FZ29061 | 2FZ29061 | PLATE EARTH DU | 1 | 1 | 1 | 1 |
| ⊙ | 10 | •302FZ29070 | 2FZ29070 | ACTUATOR DU | 1 | 1 | 1 | 1 |
| | 11 | •302FZ29080 | 2FZ29080 | RETAINER ACTUATOR DU | 1 | 1 | 1 | 1 |
| | 12 | •302FZ29090 | 2FZ29090 | SPRING ACT DU | 1 | 1 | 1 | 1 |
| ⊙ | 13 | •302FZ29110 | 2FZ29110 | BELT DU | 1 | 1 | 1 | 1 |
| ⊙ | 14 | •302FZ29120 | 2FZ29120 | PULLEY DU BELT | 2 | 2 | 2 | 2 |
| | 15 | •302FZ29131 | 2FZ29131 | SPRING DU | 4 | 4 | 4 | 4 |
| | 16 | •302FZ29140 | 2FZ29140 | COLLAR DU PULLEY | 2 | 2 | 2 | 2 |
| ⊙ | 17 | •302FZ31071 | 2FZ31071 | MOTOR DU | 1 | 1 | 1 | 1 |
| | 18 | •302FZ46680 | 2FZ46680 | WIRE DU PI | 1 | 1 | 1 | 1 |
| ⊙ | 19 | •302FZ94620 | 2FZ94620 | PARTS,ROLLER DUPLEX A SP | 1 | 1 | 1 | 1 |
| ⊙ | 20 | •302FZ94630 | 2FZ94630 | PARTS,ROLLER DUPLEX B SP | 1 | 1 | 1 | 1 |
| | 21 | •302HP34040 | 2HP34040 | LABEL JAM CONVEYING | 2 | 2 | 2 | 2 |
| | 22 | •5MVX111DN003 | 2A806250 | R NG STOPPER /A-49 FEED A4 | 1 | 1 | 1 | 1 |
| ⊙ | A02 | 302FZ93490 | 2FZ93490 | PARTS LEFT COVER ASSY | 1 | 1 | 1 | 1 |
| | 23 | •2BG22990 | | CUT WASHER 4 | 1 | 1 | 1 | 1 |
| ⊙ | 24 | •302FZ04302 | 2FZ04302 | COVER LEFT | 1 | 1 | 1 | 1 |
| ⊙ | 25 | •302FZ04321 | 2FZ04321 | LEVER LEFT COVER | 1 | 1 | 1 | 1 |
| | 26 | •302FZ04330 | 2FZ04330 | SHAFT HOOK | 1 | 1 | 1 | 1 |
| | 27 | •302FZ04360 | 2FZ04360 | PLATE LEFT COVER F | 1 | 1 | 1 | 1 |
| | 28 | •302FZ04370 | 2FZ04370 | PLATE LEFT COVER R | 1 | 1 | 1 | 1 |
| | 29 | •302FZ04390 | 2FZ04390 | SPRING LEFT COVER F | 1 | 1 | 1 | 1 |
| | 30 | •302FZ04400 | 2FZ04400 | SPRING LEFT COVER R | 1 | 1 | 1 | 1 |
| ⊙ | 31 | •302FZ04800 | 2FZ04800 | HOOK LEFT COVER F | 1 | 1 | 1 | 1 |
| ⊙ | 32 | •302FZ04810 | 2FZ04810 | HOOK LEFT COVER R | 1 | 1 | 1 | 1 |
| | 33 | •302FZ04970 | 2FZ04970 | PLATE LEFT COVER C | 1 | 1 | 1 | 1 |
| | 34 | •302FZ04980 | 2FZ04980 | PLATE LEFT COVER D | 1 | 1 | 1 | 1 |
| | 35 | •302FZ24150 | 2FZ24150 | SHEET LEFT PLATE | 2 | 2 | 2 | 2 |
| ⊙ | 36 | •302FZ28050 | 2FZ28050 | GU DE CHANGE L | 1 | 1 | 1 | 1 |
| | 37 | •302FZ28230 | 2FZ28230 | SPRING SEPARATE | 1 | 1 | 1 | 1 |
| ⊙ | 38 | •302FZ28280 | 2FZ28280 | SHEET SILENCER EXIT | 1 | 1 | 1 | 1 |
| | 39 | •7ZG65TSV+020H01 | ZG046810 | SHIELD GASKET | 3 | 3 | 3 | 3 |
| | 40 | •7ZGSTG77+014H01 | ZG045150 | SHIELD GASKET | 1 | 1 | 1 | 1 |
| ⊙ | 41 | 302FB05380 | 2FB05380 | LABEL VFEED CAUTION | | 1 | 1 | 1 |
| ⊙ | 41 | 302GR34420 | 2GR34420 | LABEL VFEED CAUTION TW | 1 | | | |
| | 42 | 302FZ04310 | 2FZ04310 | SHAFT LEFT COVER | 1 | 1 | 1 | 1 |
| | 43 | 302FZ04420 | 2FZ04420 | SHAFT LEFT COVER B | 1 | 1 | 1 | 1 |
| | 44 | 302FZ04990 | 2FZ04990 | BAND LEFT COVER | 2 | 2 | 2 | 2 |
| ⊙ | 45 | 302FB05440 | 2FB05440 | LABEL VFEED CAUTION 6NATIONS | | 1 | 1 | 1 |

| | Ref. No. | Part.No. | Alternative. | Description | Quantity 110 | 120 | 230 | 240 |
|---|---|---|---|---|---|---|---|---|
| | 101 | B1A54080 | | +BIND TAP-TITE S SCREW M4X08 | | | | |
| | 102 | 7BB000404H | BB046770 | +BIND SCREW M4X4 CRFREE | | | | |
| | 103 | 5MBTPB3008PW++R | B1A63080 | B ND T.T SCREW(+) / M3 X 8 CRFREE P-T | | | | |
| | 104 | B1B64080 | | +BIND TAP-TITE P SCREW M4X08 | | | | |
| | 105 | E5120100 | | SPRING PIN H7A 2X10 SUS | | | | |

- Parts with "•" are component parts or sub-assemblies of the assembly appearing immediately above them.
- Parts with "⊙" indicate regular maintenance parts.

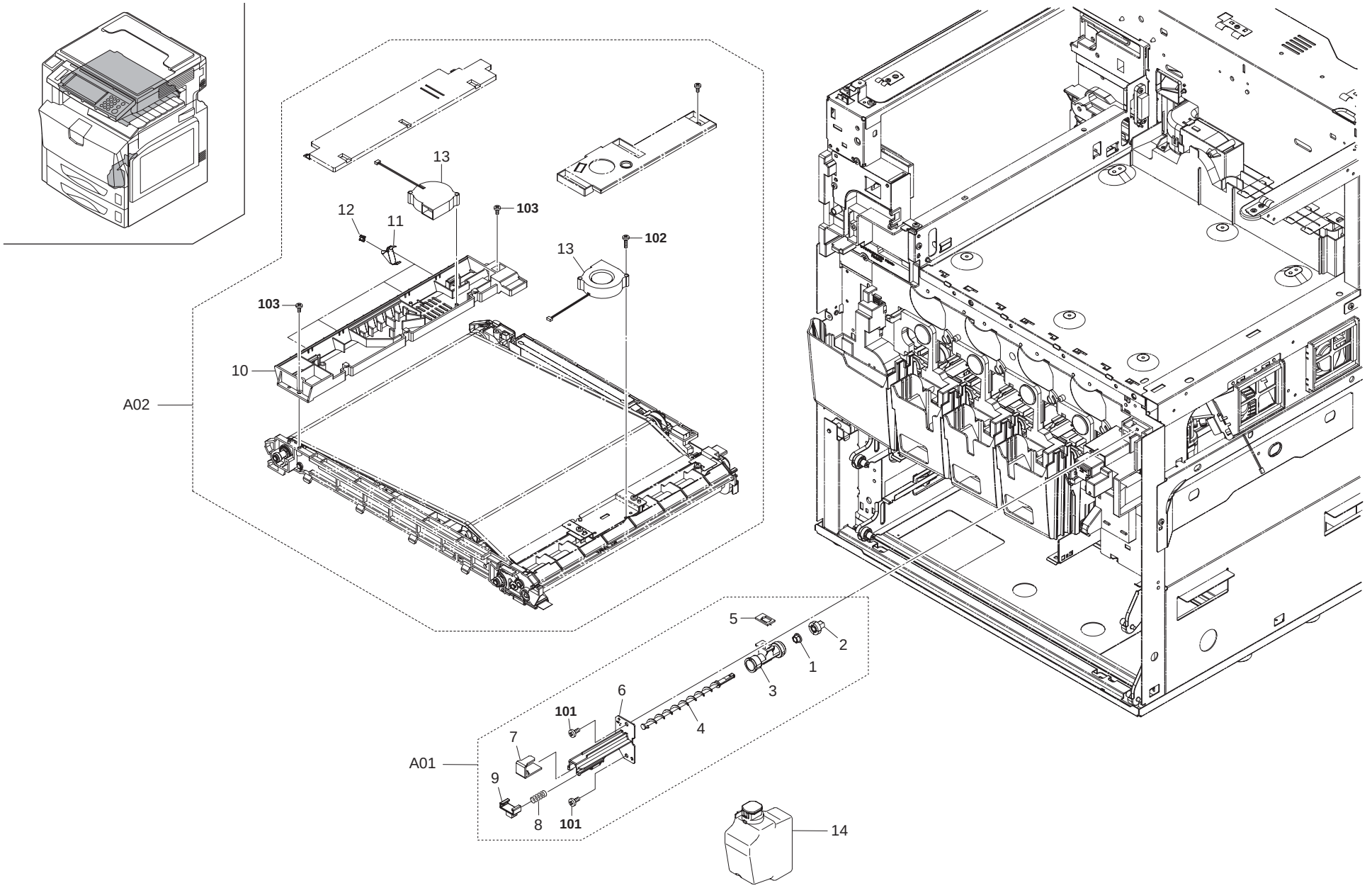
13
12
11
103
102
13
103
10
A02
5
2
1
3
6
101
4
7
A01
9
8
101
14

| | Ref. No. | Part.No. | Alternative. | Description | Quantity 110 | 120 | 230 | 240 |
|---|---|---|---|---|---|---|---|---|
| ⊙ | A01 | 302FZ94320 | 2FZ94320 | PARTS,ICL WT ASS'Y SP | 1 | 1 | 1 | 1 |
| | 1 | •2BG22960 | | BUSH 6 | 1 | 1 | 1 | 1 |
| | 2 | •2C916180 | | GEAR Z15 REGIST | 1 | 1 | 1 | 1 |
| | 3 | •302FZ23600 | 2FZ23600 | PIPE JOINT ICL | 1 | 1 | 1 | 1 |
| | 4 | •302FZ23610 | 2FZ23610 | SCREW WT ICL | 1 | 1 | 1 | 1 |
| | 5 | •302FZ23640 | 2FZ23640 | SEAL PIPE WT ICL | 1 | 1 | 1 | 1 |
| | 6 | •302FZ23650 | 2FZ23650 | PIPE WT ICL | 1 | 1 | 1 | 1 |
| | 7 | •302FZ23710 | 2FZ23710 | SEAL SHUTTER ICL | 1 | 1 | 1 | 1 |
| | 8 | •5MMW465LD003 | 2D915380 | SPRING SHUTTER WASTE/A-80 A4 | 1 | 1 | 1 | 1 |
| | 9 | •5MVX332DB020 | 2BS08510 | SHUTTER WASTE /43587J2027 A4 | 1 | 1 | 1 | 1 |
| ⊙ | A02 | 302FZ93094 | 2FZ93094 | PARTS TRANSFER BELT ASS'Y | 1 | 1 | 1 | 1 |
| | 10 | •302FZ21242 | 2FZ21242 | GU DE BELT UP | 1 | 1 | 1 | 1 |
| | 11 | •302FZ21700 | 2FZ21700 | HOLDER GU DE PULLEY | 4 | 4 | 4 | 4 |
| | 12 | •302FZ25940 | 2FZ25940 | PULLEY GUIDE | 4 | 4 | 4 | 4 |
| ⊙ | 13 | •302FZ94660 | 2FZ94660 | PARTS,FAN IMAGE SP | 2 | 2 | 2 | 2 |
| | 14 | 302FZ00700 | 2FZ00700 | WASTE BOTTLE ASS'Y | 1 | 1 | 1 | 1 |

| | Ref. No. | Part.No. | Alternative. | Description | Quantity 110 | 120 | 230 | 240 |
|---|---|---|---|---|---|---|---|---|
| | 101 | B1A54080 | | +BIND TAP-TITE S SCREW M4X08 | | | | |

- Parts with "•" are component parts or sub-assemblies of the assembly appearing immediately above them.
- Parts with "⊙" indicate regular maintenance parts.

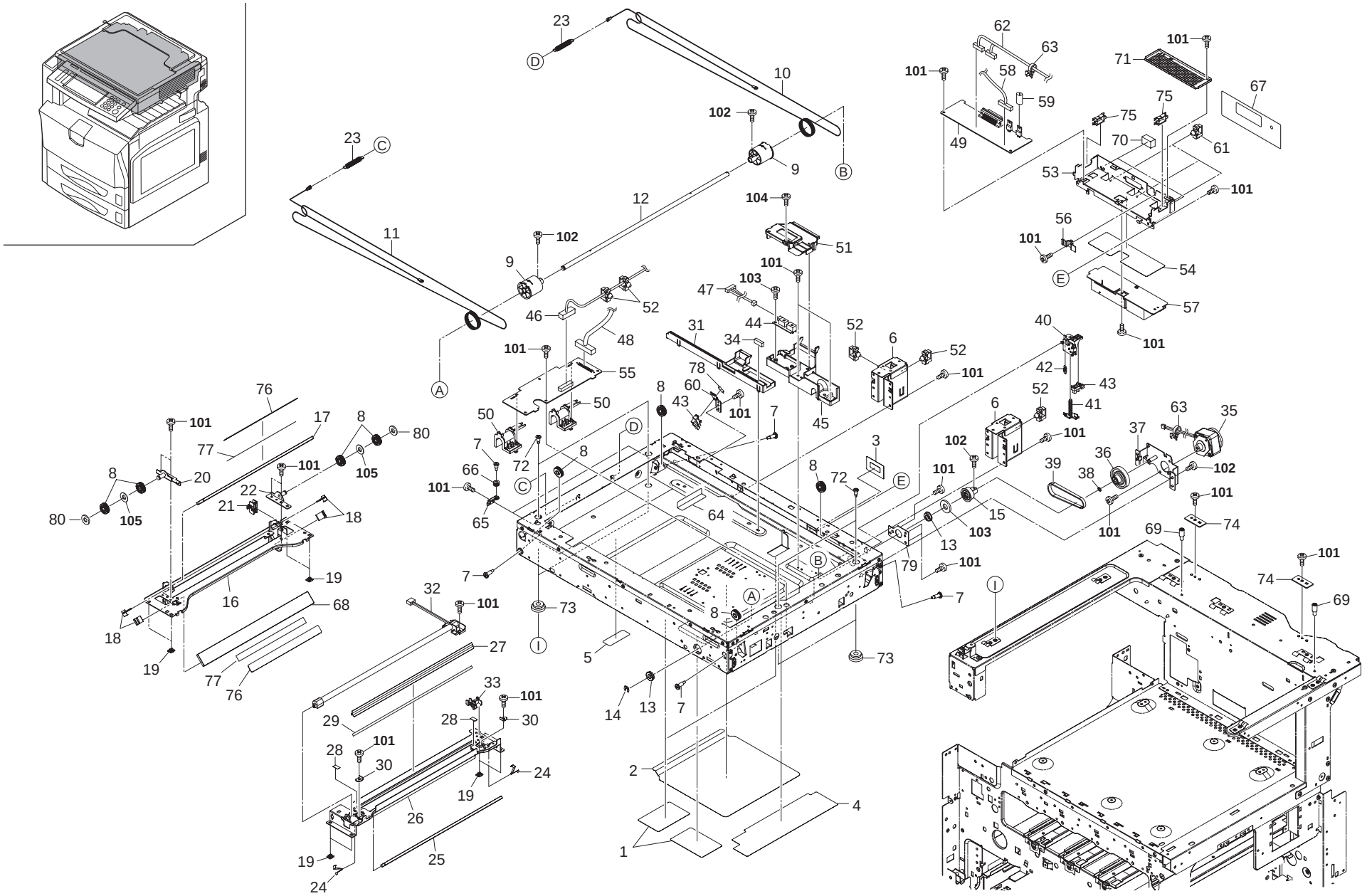
23
D
10
102
9
B
23
C
12
11
102
9
104
51
101
103
47
52
46
48
31
44
34
52
6
52
101
55
78
60
43
101
7
45
40
42
43
41
52
6
101
101
76
17
8
80
77
101
105
8
20
22
21
18
80
105
50
50
7
72
8
66
C
101
65
64
8
72
3
E
102
101
39
38
36
37
63
35
102
101
15
103
13
101
101
74
69
79
101
7
7
73
I
5
8
A
B
32
101
27
19
16
68
18
19
77
76
33
101
29
28
30
28
101
30
24
19
26
25
19
24
14
13
7
2
4
1
62
63
101
58
59
49
101
71
67
75
75
70
61
53
101
56
101
54
E
57
101
101
74
69
I

FIG. 11 Optical Unit I

| | Ref. No. | Part.No. | Alternative. | Description | Quantity 110 | 120 | 230 | 240 |
|---|---|---|---|---|---|---|---|---|
| | 1 | 302GR17410 | 2GR17410 | SEAL FRAME A | 3 | 3 | 3 | 3 |
| | 2 | 302GR17420 | 2GR17420 | SEAL FRAME B | 1 | 1 | 1 | 1 |
| | 3 | 302GR17450 | 2GR17450 | SEAL GUIDE W RE D | 1 | 1 | 1 | 1 |
| | 4 | 302GR17460 | 2GR17460 | SEAL FRAME C | 1 | 1 | 1 | 1 |
| | 5 | 303KB28010 | 3KB28010 | PAD JS SENSOR | 1 | 1 | 1 | 1 |
| | 6 | 302GR17270 | 2GR17270 | MOUNT DP HINGE | 2 | 2 | 2 | 2 |
| | 7 | 302GR17350 | 2GR17350 | PIN WIRE PULLEY B | 6 | 6 | 6 | 6 |
| | 8 | 302GR17820 | 2GR17820 | PULLEY SCANNER | 8 | 8 | 8 | 8 |
| | 9 | 2C912340 | | DRUM PULLEY | 2 | 2 | 2 | 2 |
| ⊙ | 10 | 302GR17100 | 2GR17100 | REAR WIRE SCANNER | 1 | 1 | 1 | 1 |
| ⊙ | 11 | 302GR17110 | 2GR17110 | FRONT W RE SCANNER | 1 | 1 | 1 | 1 |
| | 12 | 302GR17190 | 2GR17190 | SHAFT SCANNER | 1 | 1 | 1 | 1 |
| | 13 | 28107400 | | BEARING,688ZZNR | 2 | 2 | 2 | 2 |
| | 14 | 2BC06910 | | STOPPER 6 | 1 | 1 | 1 | 1 |
| ⊙ | 15 | 302FZ17020 | 2FZ17020 | PULLEY SCANNER 50 | 1 | 1 | 1 | 1 |
| | 16 | 302GR17091 | 2GR17091 | MIRROR FRAME B | 1 | 1 | 1 | 1 |
| ⊙ | 17 | 302GR17280 | 2GR17280 | MIRROR B | 1 | 1 | 1 | 1 |
| | 18 | 75712080 | | MIRROR HOLDER | 4 | 4 | 4 | 4 |
| | 19 | 2DC12230 | | SLIDER SCANNER | 8 | 8 | 8 | 8 |
| | 20 | 302GR17131 | 2GR17131 | ADJUST NG PLATE B | 1 | 1 | 1 | 1 |
| | 21 | 302GR17150 | 2GR17150 | GU DE WIRE B | 1 | 1 | 1 | 1 |
| | 22 | 302GR17980 | 2GR17980 | PULLEY PLATE B | 1 | 1 | 1 | 1 |
| | 23 | 302C912291 | 2C912291 | SPRING SCANNER TENSION | 2 | 2 | 2 | 2 |
| | 24 | 2BC12190 | | SPRING,M RROR HOLDER | 2 | 2 | 2 | 2 |
| ⊙ | 25 | 2FB12140 | | MIRROR A | 1 | 1 | 1 | 1 |
| | 26 | 302GR17082 | 2GR17082 | MIRROR FRAME A | 1 | 1 | 1 | 1 |
| | 27 | 302GR17250 | 2GR17250 | REFLECTOR SCANNER | 1 | 1 | 1 | 1 |
| | 28 | 302GR17400 | 2GR17400 | FILM LAMP | 2 | 2 | 2 | 2 |
| | 29 | 302GR17620 | 2GR17620 | TAPE REFLECTOR | 1 | 1 | 1 | 1 |
| | 30 | 2C912150 | | RETAINER WIRE | 2 | 2 | 2 | 2 |
| | 31 | 302GR17160 | 2GR17160 | GU DE WIRE C | 1 | 1 | 1 | 1 |
| ⊙ | 32 | 302GR17120 | 2GR17120 | LAMP SCANNER | 1 | 1 | 1 | 1 |
| | 33 | 302GR17140 | 2GR17140 | GU DE WIRE A | 1 | 1 | 1 | 1 |
| | 34 | 302GR17440 | 2GR17440 | HOLDER GU DE W RE C | 1 | 1 | 1 | 1 |
| ⊙ | 35 | 302GR44270 | 2GR44270 | MOTOR SCANNER | 1 | 1 | 1 | 1 |
| ⊙ | 36 | 302FZ17010 | 2FZ17010 | PULLEY SCANNER 41/26 | 1 | 1 | 1 | 1 |
| | 37 | 302FZ17030 | 2FZ17030 | MOUNT SCANNER DRIVE | 1 | 1 | 1 | 1 |
| | 38 | 5MVS665KB001 | 2BM40060 | CUT WASHER | 1 | 1 | 1 | 1 |
| ⊙ | 39 | 302FZ17040 | 2FZ17040 | BELT SCANNER | 1 | 1 | 1 | 1 |
| | 40 | 302GR17300 | 2GR17300 | MOUNT RELEASE SWITCH | 1 | 1 | 1 | 1 |
| ⊙ | 41 | 302GR17370 | 2GR17370 | SWITCH RELEASE | 1 | 1 | 1 | 1 |
| | 42 | 302GR17380 | 2GR17380 | SPRING RELEASE SWITCH | 1 | 1 | 1 | 1 |
| ⊙ | 43 | 2C927210 | | SENSOR 248NL1 | 2 | 2 | 2 | 2 |
| ⊙ | 44 | 2C927090 | | SENSOR ORIG NAL | 1 | 1 | 1 | 1 |
| | 45 | 302GR17740 | 2GR17740 | GU DE WIRE D | 1 | 1 | 1 | 1 |
| | 46 | 302GR46021 | 2GR46021 | WIRE SHD-SCANNER PWB | 1 | 1 | 1 | 1 |
| | 47 | 302GR46040 | 2GR46040 | WIRE SCANNER HP SW | 1 | 1 | 1 | 1 |
| | 48 | 302FZ46570 | 2FZ46570 | WIRE CCD DATA NON SH ELD | 1 | 1 | 1 | 1 |
| ⊙ | 49 | 302FZ01060 | 2FZ01060 | PRINTED W.BOARD SCANNER ASSY (25/25ppm) (32/25ppm) (32/32ppm) | 1 | 1 | 1 | 1 |
| ⊙ | 49 | 302JD94030 | 2JD94030 | PARTS,PWB SCANNER ASSY SP (40/35ppm) | | 1 | 1 | 1 |
| | 50 | 302GR17340 | 2GR17340 | GUIDE FFC | 2 | 2 | 2 | 2 |
| | 51 | 302GR17770 | 2GR17770 | GUIDE WIRE E | 1 | 1 | 1 | 1 |
| | 52 | 7YZM610001++H01 | YZ010230 | ACCESS SADDLE | 5 | 5 | 5 | 5 |
| | 53 | 302GR17320 | 2GR17320 | MOUNT SCANNER PWB | 1 | 1 | 1 | 1 |
| | 54 | 302GR17430 | 2GR17430 | SEAL LAMP INVERTER | 1 | 1 | 1 | 1 |
| ⊙ | 55 | 302FZ01050 | 2FZ01050 | PRINTED W.BOARD SHD (25/25ppm) (32/25ppm) (32/32ppm) | 1 | 1 | 1 | 1 |
| ⊙ | 55 | 302JD94040 | 2JD94040 | PARTS,PWB SHD ASSY SP (40/35ppm) | | 1 | 1 | 1 |
| | 56 | 302GR17330 | 2GR17330 | RETA NER REGURATOR | 1 | 1 | 1 | 1 |
| ⊙ | 57 | 302GR45080 | 2GR45080 | UNIT LAMP NVERTER | 1 | 1 | 1 | 1 |
| | 58 | 302GR46060 | 2GR46060 | WIRE LAMP INVERTER | 1 | 1 | 1 | 1 |
| | 59 | 7ZS22110301+H01 | ZS038190 | THERMAL SEAT | 1 | 1 | 1 | 1 |
| | 60 | 302GR17750 | 2GR17750 | HOLDER PI | 1 | 1 | 1 | 1 |
| | 61 | 7YZM610007++H01 | YZ023340 | ACCESS.SADDLE | 3 | 3 | 3 | 3 |
| | 62 | 302FZ46560 | 2FZ46560 | WIRE SCANNER-IPU PWB | 1 | 1 | 1 | 1 |
| | 63 | 7YZM410002++H01 | YZ042720 | ACCESS.BAND | 2 | 2 | 2 | 2 |
| | 64 | 302GR17930 | 2GR17930 | SEAL SCANNER FRAME E | 2 | 2 | 2 | 2 |
| | 65 | 302GR17860 | 2GR17860 | PLATE PULLEY | 2 | 2 | 2 | 2 |
| ⊙ | 66 | 2BC07050 | | PULLEY,LIFT WIRE | 2 | 2 | 2 | 2 |
| | 67 | 302GR17890 | 2GR17890 | SEAL SCANNER PWB | 1 | 1 | 1 | 1 |
| ⊙ | 68 | 302GR17960 | 2GR17960 | M RROR C | 1 | 1 | 1 | 1 |
| | 69 | 302FB16320 | 2FB16320 | P N ROLLER RELEASE LEVER | 2 | 2 | 2 | 2 |
| | 70 | 7ZG65TSV+015H01 | ZG045200 | SHIELD GASKET | 2 | 2 | 2 | 2 |
| ⊙ | 71 | 302GR17730 | 2GR17730 | LID PWB S | 1 | 1 | 1 | 1 |
| ⊙ | 72 | 302GR17180 | 2GR17180 | P N SCANNER RETAIN NG | 4 | 4 | 4 | 4 |
| | 73 | 2AV12280 | | BASE RUBBER,SCANNER SECTION | 4 | 4 | 4 | 4 |
| | 74 | 302FZ02390 | 2FZ02390 | SPACER ISU | 2 | 2 | 2 | 2 |
| | 75 | 7YZM210003++H01 | YZ037970 | ACCESS.EDG NG | 2 | 2 | 2 | 2 |
| ⊙ | 76 | 302GR17830 | 2GR17830 | PLATE MIRROR B | 2 | 2 | 2 | 2 |
| ⊙ | 77 | 302GR17840 | 2GR17840 | SEAL PLATE M RROR B | 2 | 2 | 2 | 2 |
| | 78 | 302GR17970 | 2GR17970 | STOPPER PI | 1 | 1 | 1 | 1 |
| | 79 | 302GR17880 | 2GR17880 | HOLDER BEARING | 1 | 1 | 1 | 1 |
| | 80 | 2BG22990 | | CUT WASHER 4 | 2 | 2 | 2 | 2 |
| | 101 | 5MBTPB3006TW++R | B1A53060 | B ND T.T SCREW(+) / M3 X 6 CRFREE S-T | | | | |
| | 102 | B0A23080 | | +ROUND HEAD SCREW WITH SW.W M3X8 | | | | |
| | 103 | 7BCW7085D020H01 | C3791130 | WAVE WASHER SUS WW8.5X13X0.2 | | | | |
| | 104 | 5MBTPB3008PW++R | B1A63080 | B ND T.T SCREW(+) / M3 X 8 CRFREE P-T | | | | |
| | 105 | C2895950 | | SHIM 6.2-1.0T | | | | |

- Parts with "•" are component parts or sub-assemblies of the assembly appearing immediately above them.
- Parts with "⊙" indicate regular maintenance parts.

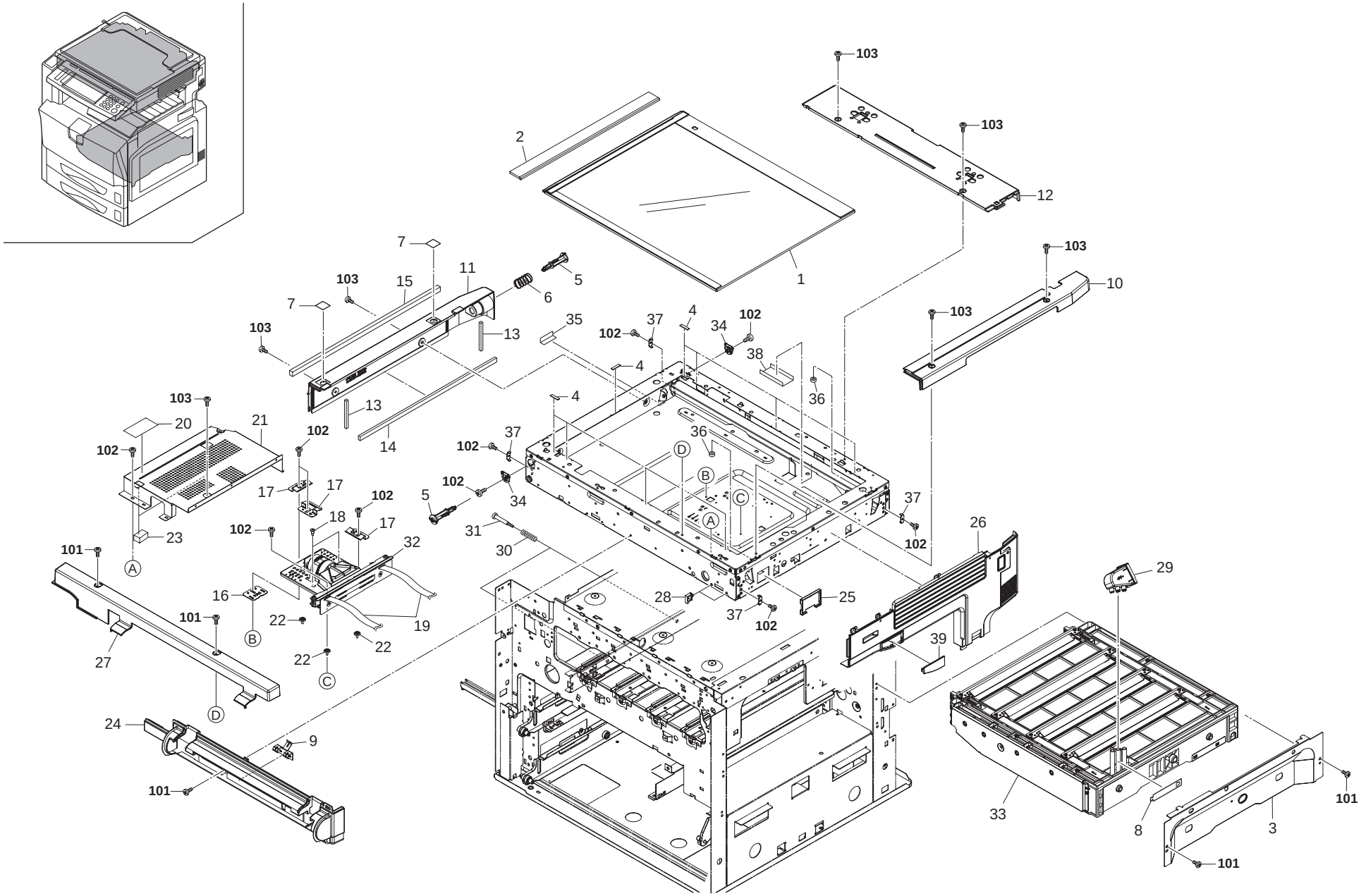
103
103
2
12
1
103
10
7
11
5
103
15
6
7
103
13
35
37
4
34
102
102
38
4
36
103
13
4
20
21
102
14
37
36
102
102
D
B
17
17
102
5
34
C
37
18
17
A
102
31
26
23
32
30
102
101
A
29
16
28
25
101
22
19
37
102
B
22
39
27
22
C
D
24
9
101
33
8
3
101
101

## FIG. 12 Optical Unit II

| | Ref. No. | Part.No. | Alternative. | Description | Quantity 110 | 120 | 230 | 240 |
|---|---|---|---|---|---|---|---|---|
| ⊙ | 1 | 302GR93310 | 2GR93310 | PARTS CONTACT GLASS (M) ASSY | 1 | | 1 | 1 |
| ⊙ | 1 | 302GR93320 | 2GR93320 | PARTS CONTACT GLASS (I) ASSY | | 1 | | |
| ⊙ | 2 | 302GR94380 | 2GR94380 | PARTS CONTACT GLASS DP ASSY | 1 | 1 | 1 | 1 |
| | 3 | 302FZ02540 | 2FZ02540 | MOUNT LSU RIGHT | 1 | 1 | 1 | 1 |
| | 4 | 29812291 | | CUSHION,CONTACT GLASS | 9 | 9 | 9 | 9 |
| | 5 | 302GR17262 | 2GR17262 | RETAINER MIRROR FRAME A | 2 | 2 | 2 | 2 |
| | 6 | 302GR17360 | 2GR17360 | SPRING FRAME RETAINER | 1 | 1 | 1 | 1 |
| | 7 | 302GR04430 | 2GR04430 | SHEET COVER ISU | 2 | 2 | 2 | 2 |
| | 8 | 302FZ03020 | 2FZ03020 | SHEET BAND TUBE | 1 | 1 | 1 | 1 |
| | 9 | 302GR04360 | 2GR04360 | GROUND PLATE ISU OPE | 1 | 1 | 1 | 1 |
| | 10 | 302GR04210 | 2GR04210 | COVER ISU RIGHT | 1 | 1 | 1 | 1 |
| | 11 | 302GR04221 | 2GR04221 | COVER ISU LEFT | 1 | 1 | 1 | 1 |
| | 12 | 302GR04231 | 2GR04231 | COVER ISU REAR | 1 | 1 | 1 | 1 |
| | 13 | 302GR17910 | 2GR17910 | SEAL COVER ISU LEFT A | 2 | 2 | 2 | 2 |
| | 14 | 302GR17920 | 2GR17920 | SEAL COVER ISU LEFT B | 1 | 1 | 1 | 1 |
| | 15 | 302GR17940 | 2GR17940 | SEAL COVER ISU LEFT C | 1 | 1 | 1 | 1 |
| | 16 | 302GR17670 | 2GR17670 | PLATE HOLDER ISU | 1 | 1 | 1 | 1 |
| | 17 | 302GR17680 | 2GR17680 | PLATE SPRING ISU | 3 | 3 | 3 | 3 |
| | 18 | 302GR17811 | 2GR17811 | PIN MOUNT LENS | 2 | 2 | 2 | 2 |
| | 19 | 302GR46010 | 2GR46010 | WIRE CCD1 | 2 | 2 | 2 | 2 |
| | 20 | 2A105180 | | LABEL,CAUTION CONTACT GLASS | 1 | 1 | 1 | 1 |
| | 21 | 302GR17560 | 2GR17560 | COVER ISU | 1 | 1 | 1 | 1 |
| | 22 | 302GR17660 | 2GR17660 | PIN ISU | 3 | 3 | 3 | 3 |
| | 23 | 7ZGSTG151018H01 | ZG045090 | SHIELD GASKET | 2 | 2 | 2 | 2 |
| | 24 | 302GR04200 | 2GR04200 | COVER ISU FRONT LOW | 1 | 1 | 1 | 1 |
| | 25 | 2FG04020 | | COVER TOTAL COUNTER | 1 | 1 | 1 | 1 |
| ⊙ | 26 | 302FZ04081 | 2FZ04081 | COVER RIGHT MID B | 1 | 1 | 1 | 1 |
| | 27 | 302GR04240 | 2GR04240 | COVER ISU FRONT TOP | 1 | 1 | 1 | 1 |
| | 28 | 7YZM610001++H01 | YZ010230 | ACCESS SADDLE | 2 | 2 | 2 | 2 |
| ⊙ | 29 | 302FZ33090 | 2FZ33090 | JOINT TUBE | 1 | 1 | 1 | 1 |
| | 30 | 302FZ20040 | 2FZ20040 | SPRING LSU | 2 | 2 | 2 | 2 |
| | 31 | 302FZ20030 | 2FZ20030 | PIN LSU | 2 | 2 | 2 | 2 |
| ⊙ | 32 | 302FZ93470 | 2FZ93470 | PARTS ISU ASS'Y | 1 | 1 | 1 | 1 |
| ⊙ | 33 | 302FZ93080 | 2FZ93080 | PARTS LSU ASS'Y (25/25ppm) (32/25ppm) (32/32ppm) | 1 | 1 | 1 | 1 |
| ⊙ | 33 | 302JD93010 | 2JD93010 | PARTS LSU ASSY (40/35ppm) | | 1 | 1 | 1 |
| | 34 | 302GR17900 | 2GR17900 | HOLDER RETAINER A | 2 | 2 | 2 | 2 |
| | 35 | 302FZ17050 | 2FZ17050 | SEAL FRAME E | 1 | 1 | 1 | 1 |
| | 36 | 302BG04560 | 2BG04560 | COVER SCREW | 2 | 2 | 2 | 2 |
| | 37 | 302GR17790 | 2GR17790 | PLATE HOLDER RAIL | 4 | 4 | 4 | 4 |
| | 38 | 302GR17870 | 2GR17870 | SEAL RA L SCANNER F | 1 | 1 | 1 | 1 |
| | 39 | 302FZ04650 | 2FZ04650 | COVER RMB SUB | 1 | 1 | 1 | 1 |

| | Ref. No. | Part.No. | Alternative. | Description | Quantity 110 | 120 | 230 | 240 |
|---|---|---|---|---|---|---|---|---|
| | 101 | B1A54080 | | +BIND TAP-TITE S SCREW M4X08 | | | | |
| | 102 | 5MBTPB3006TW++R | B1A53060 | B ND T.T SCREW(+) / M3 X 6 CRFREE S-T | | | | |
| | 103 | 5MBTPB3008PW++R | B1A63080 | B ND T.T SCREW(+) / M3 X 8 CRFREE P-T | | | | |

- Parts with "•" are component parts or sub-assemblies of the assembly appearing immediately above them.
- Parts with "⊙" indicate regular maintenance parts.

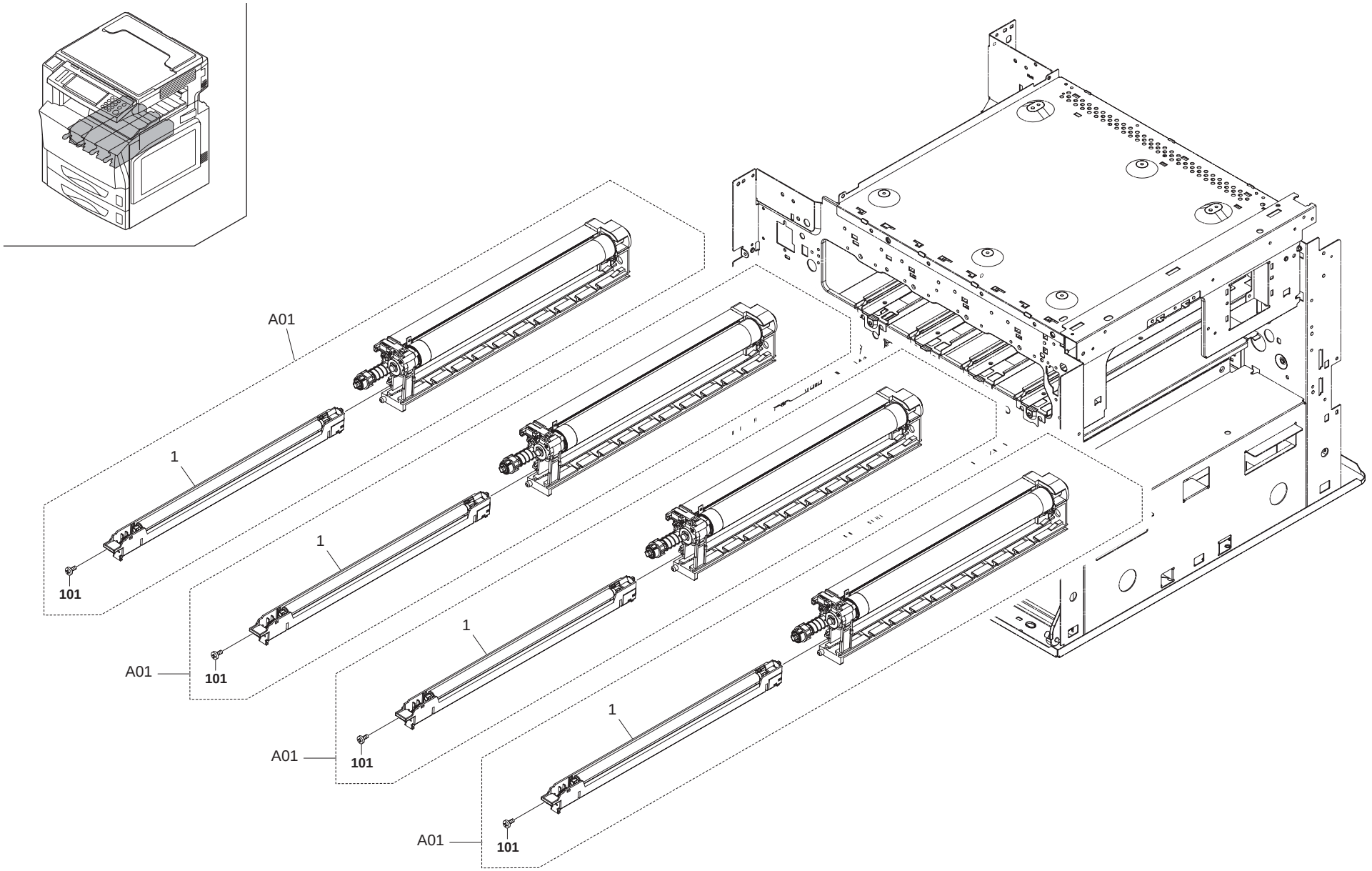
A01
1
101
A01
1
101
A01
1
101
A01
1
101

FIG. 13 Imaging Unit

| | Ref. No. | Part.No. | Alternative. | Description | Quantity 110 | 120 | 230 | 240 |
|---|---|---|---|---|---|---|---|---|
| ⊙ | A01 | 302FZ93102 | 2FZ93102 | PARTS DRUM ASS'Y (25/25ppm) (32/25ppm) (32/32ppm) | 4 | 4 | 4 | 4 |
| ⊙ | A01 | 302JD93080 | 2JD93080 | PARTS DRUM ASSY (40/35ppm) | | 4 | 4 | 4 |
| ⊙ | 1 | •302FZ93480 | 2FZ93480 | PARTS MC-820 (25/25ppm) (32/25ppm) (32/32ppm) | 4 | 4 | 4 | 4 |
| ⊙ | 1 | •302JD93120 | 2JD93120 | PARTS MC-825 (40/35ppm) | | 4 | 4 | 4 |

| | Ref. No. | Part.No. | Alternative. | Description | Quantity 110 | 120 | 230 | 240 |
|---|---|---|---|---|---|---|---|---|
| | 101 | 5MBTPB3006TW++R | B1A53060 | B ND T.T SCREW(+) / M3 X 6 CRFREE S-T | | | | |

- Parts with "•" are component parts or sub-assemblies of the assembly appearing immediately above them.
- Parts with "⊙" indicate regular maintenance parts.

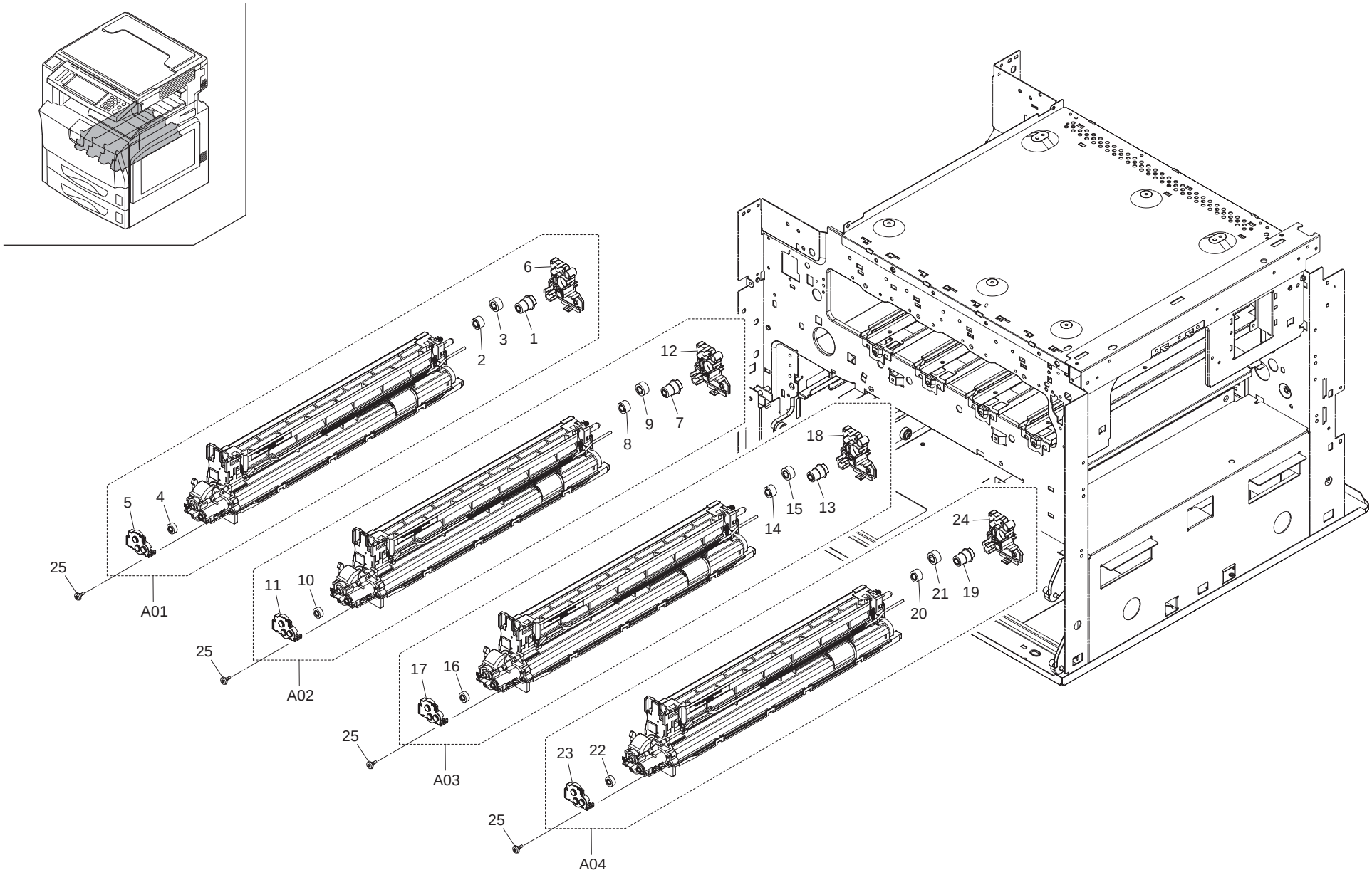
6
2
3
1
12
8
9
7
18
5
4
14
15
13
24
25
A01
11
10
20
21
19
25
A02
17
16
25
A03
23
22
25
A04

FIG. 14 Developer Unit

| | Ref. No. | Part.No. | Alternative. | Description | Quantity | | | |
|---|---|---|---|---|---|---|---|---|
| | | | | | 110 | 120 | 230 | 240 |
| ⊙ | A01 | 302FZ93113 | 2FZ93113 | PARTS DLP K ASS'Y | 1 | 1 | 1 | 1 |
| ⊙ | 1 | •302FZ14161 | 2FZ14161 | GEAR MAG Z14H | 1 | 1 | 1 | 1 |
| ⊙ | 2 | •302FZ14170 | 2FZ14170 | GEAR DLE Z15H DLP | 1 | 1 | 1 | 1 |
| ⊙ | 3 | •302FZ14180 | 2FZ14180 | GEAR SLEEVE Z17H | 1 | 1 | 1 | 1 |
| ⊙ | 4 | •302FZ14230 | 2FZ14230 | GEAR Z14S | 1 | 1 | 1 | 1 |
| | 5 | •302FZ14300 | 2FZ14300 | COVER FRONT DLP | 1 | 1 | 1 | 1 |
| | 6 | •302FZ14310 | 2FZ14310 | COVER REAR BK DLP | 1 | 1 | 1 | 1 |
| ⊙ | A02 | 302FZ93123 | 2FZ93123 | PARTS DLP Y ASS'Y | 1 | 1 | 1 | 1 |
| ⊙ | 7 | •302FZ14161 | 2FZ14161 | GEAR MAG Z14H | 1 | 1 | 1 | 1 |
| ⊙ | 8 | •302FZ14170 | 2FZ14170 | GEAR DLE Z15H DLP | 1 | 1 | 1 | 1 |
| ⊙ | 9 | •302FZ14180 | 2FZ14180 | GEAR SLEEVE Z17H | 1 | 1 | 1 | 1 |
| ⊙ | 10 | •302FZ14230 | 2FZ14230 | GEAR Z14S | 1 | 1 | 1 | 1 |
| | 11 | •302FZ14300 | 2FZ14300 | COVER FRONT DLP | 1 | 1 | 1 | 1 |
| | 12 | •302FZ14420 | 2FZ14420 | COVER REAR Y DLP | 1 | 1 | 1 | 1 |
| ⊙ | A03 | 302FZ93133 | 2FZ93133 | PARTS DLP C ASS'Y | 1 | 1 | 1 | 1 |
| ⊙ | 13 | •302FZ14161 | 2FZ14161 | GEAR MAG Z14H | 1 | 1 | 1 | 1 |
| ⊙ | 14 | •302FZ14170 | 2FZ14170 | GEAR DLE Z15H DLP | 1 | 1 | 1 | 1 |
| ⊙ | 15 | •302FZ14180 | 2FZ14180 | GEAR SLEEVE Z17H | 1 | 1 | 1 | 1 |
| ⊙ | 16 | •302FZ14230 | 2FZ14230 | GEAR Z14S | 1 | 1 | 1 | 1 |
| | 17 | •302FZ14300 | 2FZ14300 | COVER FRONT DLP | 1 | 1 | 1 | 1 |
| | 18 | •302FZ14430 | 2FZ14430 | COVER REAR C DLP | 1 | 1 | 1 | 1 |
| ⊙ | A04 | 302FZ93143 | 2FZ93143 | PARTS DLP M ASS'Y | 1 | 1 | 1 | 1 |
| ⊙ | 19 | •302FZ14161 | 2FZ14161 | GEAR MAG Z14H | 1 | 1 | 1 | 1 |
| ⊙ | 20 | •302FZ14170 | 2FZ14170 | GEAR DLE Z15H DLP | 1 | 1 | 1 | 1 |
| ⊙ | 21 | •302FZ14180 | 2FZ14180 | GEAR SLEEVE Z17H | 1 | 1 | 1 | 1 |
| ⊙ | 22 | •302FZ14230 | 2FZ14230 | GEAR Z14S | 1 | 1 | 1 | 1 |
| | 23 | •302FZ14300 | 2FZ14300 | COVER FRONT DLP | 1 | 1 | 1 | 1 |
| | 24 | •302FZ14440 | 2FZ14440 | COVER REAR M DLP | 1 | 1 | 1 | 1 |
| | 25 | 302FZ14840 | 2FZ14840 | STUD SCREW M4 | 4 | 4 | 4 | 4 |

- Parts with "•" are component parts or sub-assemblies of the assembly appearing immediately above them.
- Parts with "⊙" indicate regular maintenance parts.

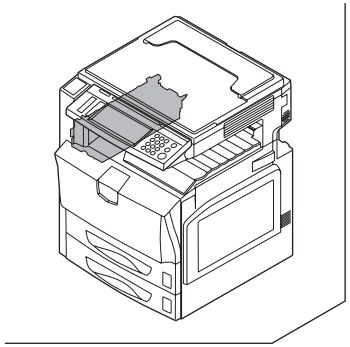

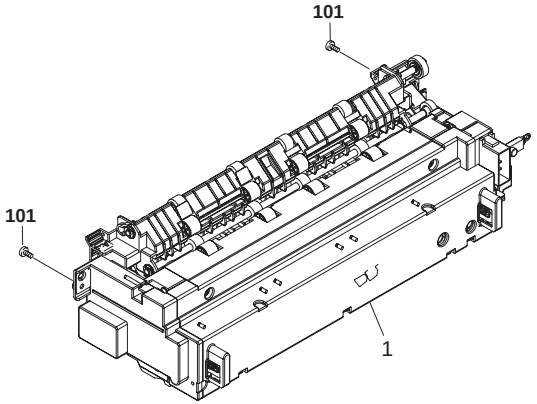
101
101
1

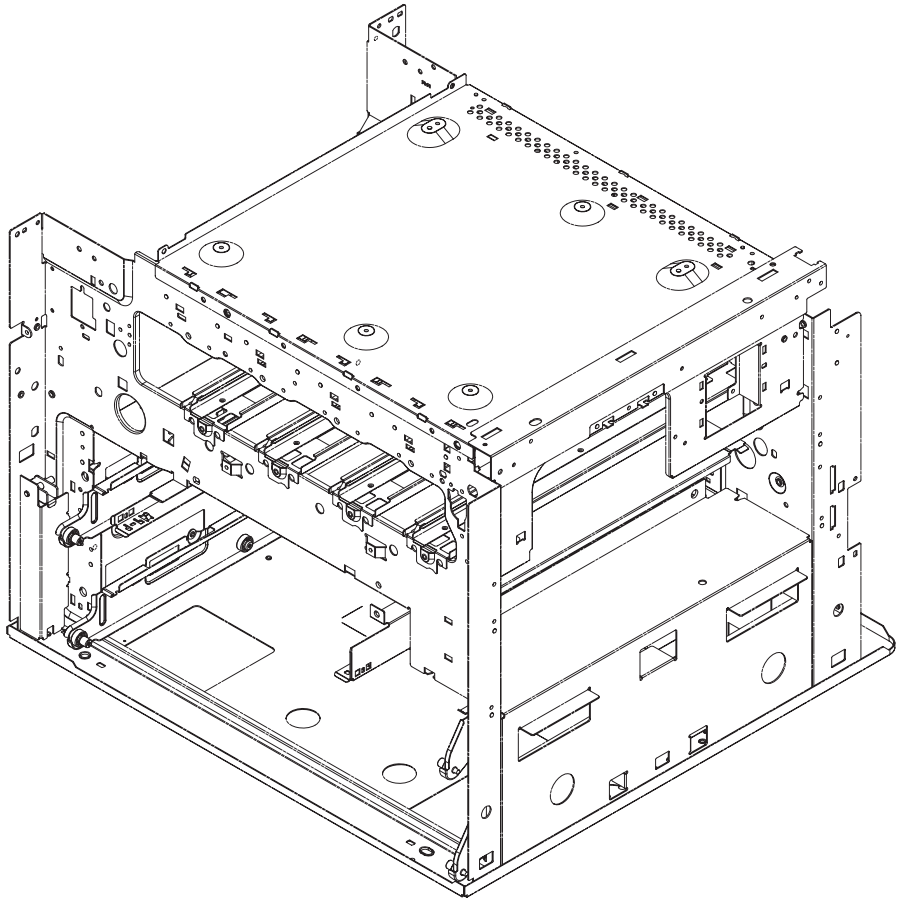

FIG. 15 Fuser Unit



| | Ref. No. | Part.No. | Alternative. | Description | Quantity | | | |
|---|---|---|---|---|---|---|---|---|
| | | | | | 110 | 120 | 230 | 240 |
| ⊙ | 1 | 302FZ93165 | 2FZ93165 | PARTS FUSER 120 ASS'Y (25/25ppm) (32/25ppm) (32/32ppm) | | 1 | | |
| ⊙ | 1 | 302JD93050 | 2JD93050 | PARTS FUSER 120 ASSY (40/35ppm) | | 1 | | |
| ⊙ | 1 | 302FZ93174 | 2FZ93174 | PARTS FUSER 200 ASS'Y (25/25ppm) (32/25ppm) (32/32ppm) | | | 1 | 1 |
| ⊙ | 1 | 302JD93060 | 2JD93060 | PARTS FUSER 200 ASSY (40/35ppm) | | | 1 | 1 |
| ⊙ | 1 | 302FZ93533 | 2FZ93533 | PARTS FUSER 110 ASSY | 1 | | | |

| | Ref. No. | Part.No. | Alternative. | Description | Quantity | | | |
|---|---|---|---|---|---|---|---|---|
| | | | | | 110 | 120 | 230 | 240 |
| | 101 | B1A54080 | | +BIND TAP-TITE S SCREW M4X08 | | | | |

- Parts with "•" are component parts or sub-assemblies of the assembly appearing immediately above them.
- Parts with "⊙" indicate regular maintenance parts.

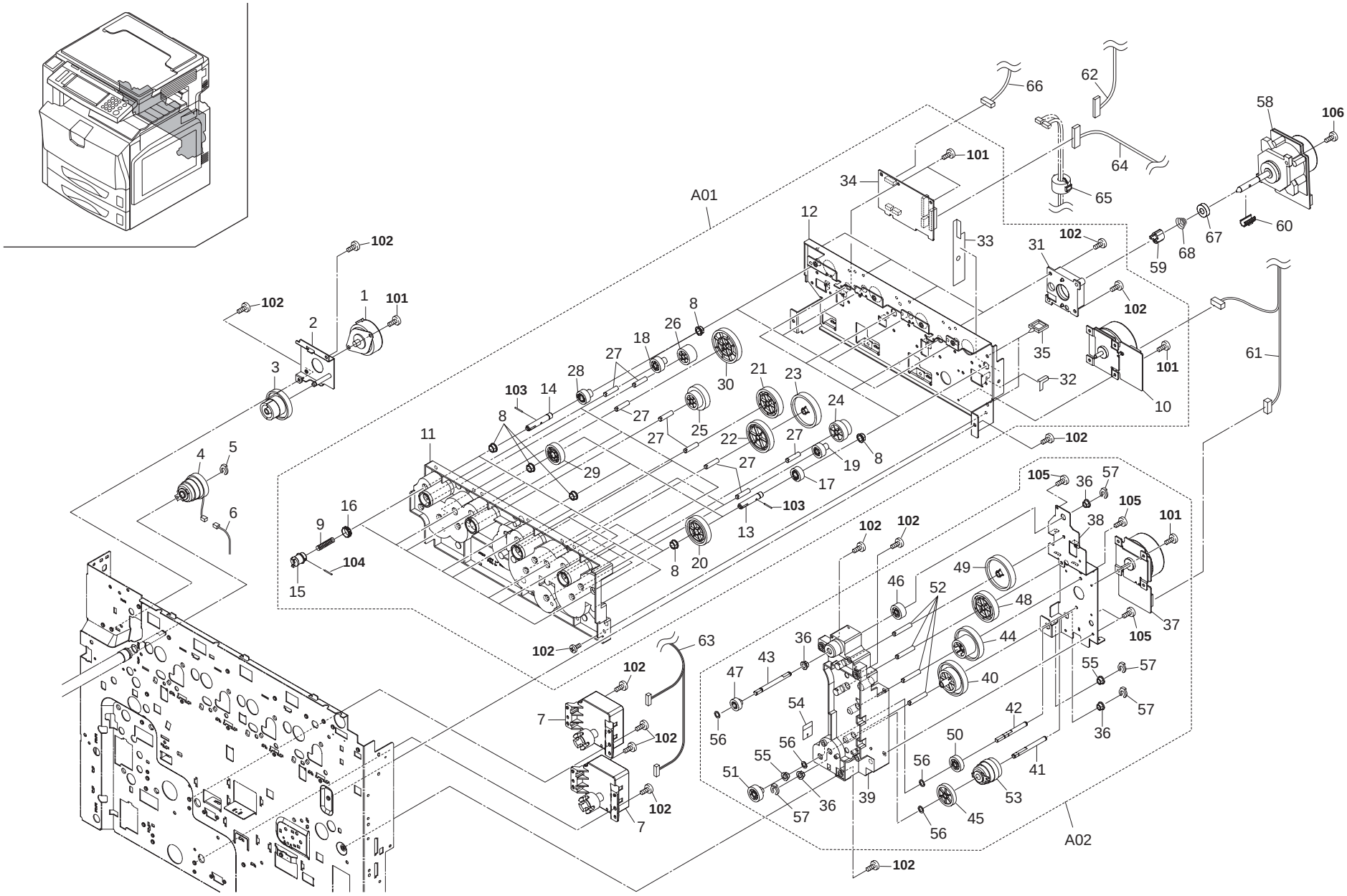
A01
A02
101
102
103
104
105
106

FIG. 16 Driving Unit I (25/25ppm) (32/25ppm) (32/32ppm)



| | Ref. No. | Part.No. | Alternative. | Description | Quantity | | | |
|---|---|---|---|---|---|---|---|---|
| | | | | | 110 | 120 | 230 | 240 |
| ⊙ | 1 | 302FZ94250 | 2FZ94250 | PARTS,MOTOR IMAGE SP | 1 | 1 | 1 | 1 |
| | 2 | 302FZ31150 | 2FZ31150 | PLATE DRIVE TC | 1 | 1 | 1 | 1 |
| ⊙ | 3 | 302FZ31560 | 2FZ31560 | GEAR Z84L Z30L TC | 1 | 1 | 1 | 1 |
| ⊙ | 4 | 302FZ31810 | 2FZ31810 | CLUTCH REGIST 8 | 1 | 1 | 1 | 1 |
| | 5 | 2BC06980 | | STOPPER 5 | 1 | 1 | 1 | 1 |
| | 6 | 302FZ46761 | 2FZ46761 | WIRE REG CLT JOINT | 1 | 1 | 1 | 1 |
| ⊙ | 7 | 302GR44112 | 2GR44112 | MOTOR L FT | 2 | 2 | 2 | 2 |
| ⊙ | A01 | 302FZ93260 | 2FZ93260 | PARTS DR-820 | 1 | 1 | 1 | 1 |
| | 8 | •2BC06510 | | BUSH NG 8 | 16 | 16 | 16 | 16 |
| | 9 | •2BG22530 | | SPRING COUPL NG DLP | 8 | 8 | 8 | 8 |
| ⊙ | 10 | •302FZ31030 | 2FZ31030 | MOTOR DLP | 1 | 1 | 1 | 1 |
| | 11 | •302FZ31080 | 2FZ31080 | HOLDER DRUM DRIVE | 1 | 1 | 1 | 1 |
| | 12 | •302FZ31092 | 2FZ31092 | PLATE DRUM DRIVE | 1 | 1 | 1 | 1 |
| | 13 | •302FZ31180 | 2FZ31180 | SHAFT DLP DRIVE | 4 | 4 | 4 | 4 |
| | 14 | •302FZ31190 | 2FZ31190 | SHAFT CLN DRIVE | 4 | 4 | 4 | 4 |
| ⊙ | 15 | •302FZ31250 | 2FZ31250 | COUPLING DLP DRIVE | 8 | 8 | 8 | 8 |
| | 16 | •302FZ31280 | 2FZ31280 | COLLAR DLP COUPL NG | 8 | 8 | 8 | 8 |
| ⊙ | 17 | •302FZ31330 | 2FZ31330 | GEAR Z22L DLP | 4 | 4 | 4 | 4 |
| ⊙ | 18 | •302FZ31340 | 2FZ31340 | GEAR Z24R | 4 | 4 | 4 | 4 |
| ⊙ | 19 | •302FZ31350 | 2FZ31350 | GEAR Z22R | 2 | 2 | 2 | 2 |
| ⊙ | 20 | •302FZ31360 | 2FZ31360 | GEAR Z50L | 2 | 2 | 2 | 2 |
| ⊙ | 21 | •302FZ31370 | 2FZ31370 | GEAR Z52R | 3 | 3 | 3 | 3 |
| ⊙ | 22 | •302FZ31380 | 2FZ31380 | GEAR Z55L | 2 | 2 | 2 | 2 |
| ⊙ | 23 | •302FZ31390 | 2FZ31390 | GEAR Z60L | 2 | 2 | 2 | 2 |
| ⊙ | 24 | •302FZ31401 | 2FZ31401 | GEAR Z54L-Z26L | 1 | 1 | 1 | 1 |
| ⊙ | 25 | •302FZ31410 | 2FZ31410 | GEAR Z42R-Z29R | 1 | 1 | 1 | 1 |
| ⊙ | 26 | •302FZ31600 | 2FZ31600 | GEAR Z28R | 1 | 1 | 1 | 1 |
| | 27 | •302FZ31720 | 2FZ31720 | PIN MAIN DRIVE | 15 | 15 | 15 | 15 |
| ⊙ | 28 | •302FZ31850 | 2FZ31850 | GEAR Z22L CLN | 4 | 4 | 4 | 4 |
| ⊙ | 29 | •302FZ31890 | 2FZ31890 | GEAR Z35L DLP | 1 | 1 | 1 | 1 |
| ⊙ | 30 | •302FZ31900 | 2FZ31900 | GEAR Z60L CLN | 1 | 1 | 1 | 1 |
| | 31 | •302FZ32051 | 2FZ32051 | HOLDER DRUM MOTOR | 4 | 4 | 4 | 4 |
| | 32 | •302FZ39800 | 2FZ39800 | SHEET DLP MOTOR | 1 | 1 | 1 | 1 |
| | 33 | •302FZ39960 | 2FZ39960 | SHEET MAIN DRIVE R | 1 | 1 | 1 | 1 |
| ⊙ | 34 | •302FZ94670 | 2FZ94670 | PARTS,PWB MOTOR DRIVER ASS'Y,SP | 1 | 1 | 1 | 1 |
| | 35 | •7YZM610004++H01 | YZ012210 | ACCESS SADDLE | 2 | 2 | 2 | 2 |
| ⊙ | A02 | 302FZ93250 | 2FZ93250 | PARTS MPF DRIVE ASS'Y | 1 | 1 | 1 | 1 |
| | 36 | •2BG22960 | | BUSH 6 | 4 | 4 | 4 | 4 |
| ⊙ | 37 | •302FZ31030 | 2FZ31030 | MOTOR DLP | 1 | 1 | 1 | 1 |
| | 38 | •302FZ31100 | 2FZ31100 | PLATE MPF DRIVE | 1 | 1 | 1 | 1 |
| | 39 | •302FZ31111 | 2FZ31111 | HOLDER MPF DRIVE | 1 | 1 | 1 | 1 |
| ⊙ | 40 | •302FZ31140 | 2FZ31140 | GEAR Z98L-Z40R MPF | 1 | 1 | 1 | 1 |
| | 41 | •302FZ31160 | 2FZ31160 | SHAFT MPF CL | 1 | 1 | 1 | 1 |
| | 42 | •302FZ31220 | 2FZ31220 | SHAFT BYPASS DRIVE | 1 | 1 | 1 | 1 |
| | 43 | •302FZ31230 | 2FZ31230 | SHAFT BRS DRIVE | 1 | 1 | 1 | 1 |
| ⊙ | 44 | •302FZ31290 | 2FZ31290 | GEAR Z94L-Z32L MPF | 1 | 1 | 1 | 1 |
| ⊙ | 45 | •302FZ31300 | 2FZ31300 | GEAR Z38R MPF | 1 | 1 | 1 | 1 |
| ⊙ | 46 | •302FZ31310 | 2FZ31310 | GEAR Z24R BRS | 1 | 1 | 1 | 1 |
| ⊙ | 47 | •302FZ31320 | 2FZ31320 | GEAR Z20S BRS | 1 | 1 | 1 | 1 |
| ⊙ | 48 | •302FZ31370 | 2FZ31370 | GEAR Z52R | 1 | 1 | 1 | 1 |
| ⊙ | 49 | •302FZ31390 | 2FZ31390 | GEAR Z60L | 1 | 1 | 1 | 1 |
| ⊙ | 50 | •302FZ31540 | 2FZ31540 | GEAR Z26L BYPASS | 1 | 1 | 1 | 1 |
| ⊙ | 51 | •302FZ31550 | 2FZ31550 | GEAR Z27S BYPASS | 1 | 1 | 1 | 1 |
| | 52 | •302FZ31710 | 2FZ31710 | P N MPF DRIVE | 4 | 4 | 4 | 4 |
| ⊙ | 53 | •302FZ31820 | 2FZ31820 | CLUTCH FEED 6 | 1 | 1 | 1 | 1 |
| | 54 | •302FZ32060 | 2FZ32060 | SEAL MPF CL | 1 | 1 | 1 | 1 |
| | 55 | •3CY07080 | | BUSHING 6 | 2 | 2 | 2 | 2 |
| | 56 | •5MVS665KB001 | 2BM40060 | CUT WASHER | 4 | 4 | 4 | 4 |
| | 57 | •5MVX111DN003 | 2A806250 | RING STOPPER /A-49 FEED A4 | 4 | 4 | 4 | 4 |
| ⊙ | 58 | 302FZ93440 | 2FZ93440 | PARTS MOTOR DRUM | 4 | 4 | 4 | 4 |
| ⊙ | 59 | 302FZ31270 | 2FZ31270 | JOINT DRUM | 4 | 4 | 4 | 4 |
| | 60 | 302FZ31990 | 2FZ31990 | STOPPER D MOTOR | 4 | 4 | 4 | 4 |
| | 61 | 302FZ46081 | 2FZ46081 | WIRE DLP MOTOR | 1 | 1 | 1 | 1 |
| | 62 | 302FZ46191 | 2FZ46191 | WIRE DRUM MOTOR SIG | 1 | 1 | 1 | 1 |
| | 63 | 302FZ46250 | 2FZ46250 | WIRE LIFT MOT | 1 | 1 | 1 | 1 |
| | 64 | 302FZ46832 | 2FZ46832 | WIRE DRM MOT A | 1 | 1 | 1 | 1 |
| | 65 | 3HK27050 | | CORE 8-16X10 | 1 | 1 | 1 | 1 |
| | 66 | 302FZ46850 | 2FZ46850 | WIRE TRNS MOT JOINT | 1 | 1 | 1 | 1 |
| | 67 | 2FG20310 | | BEAR NG PRESS ROLLER | 4 | 4 | 4 | 4 |
| | 68 | 302BG22021 | 2BG22021 | SPRING JOINT D | 4 | 4 | 4 | 4 |
| | 101 | 5MBTPB3006TW++R | B1A53060 | B ND T.T SCREW(+) / M3 X 6 CRFREE S-T | | | | |
| | 102 | B1A54080 | | +BIND TAP-TITE S SCREW M4X08 | | | | |
| | 103 | 5MBP2012WXSP | E0020120 | SPRING PIN / M2 X 12 S-BLK | | | | |
| | 104 | E5125120 | | PARALLEL P N H7A 2.5X12 SUS | | | | |
| | 105 | 5MBTPB3008PW++R | B1A63080 | B ND T.T SCREW(+) / M3 X 8 CRFREE P-T | | | | |
| | 106 | B1B54300 | | +BIND TAP-TITE S SCREW M4X30(TRIVAL | | | | |

- Parts with "•" are component parts or sub-assemblies of the assembly appearing immediately above them.
- Parts with "⊙" indicate regular maintenance parts.

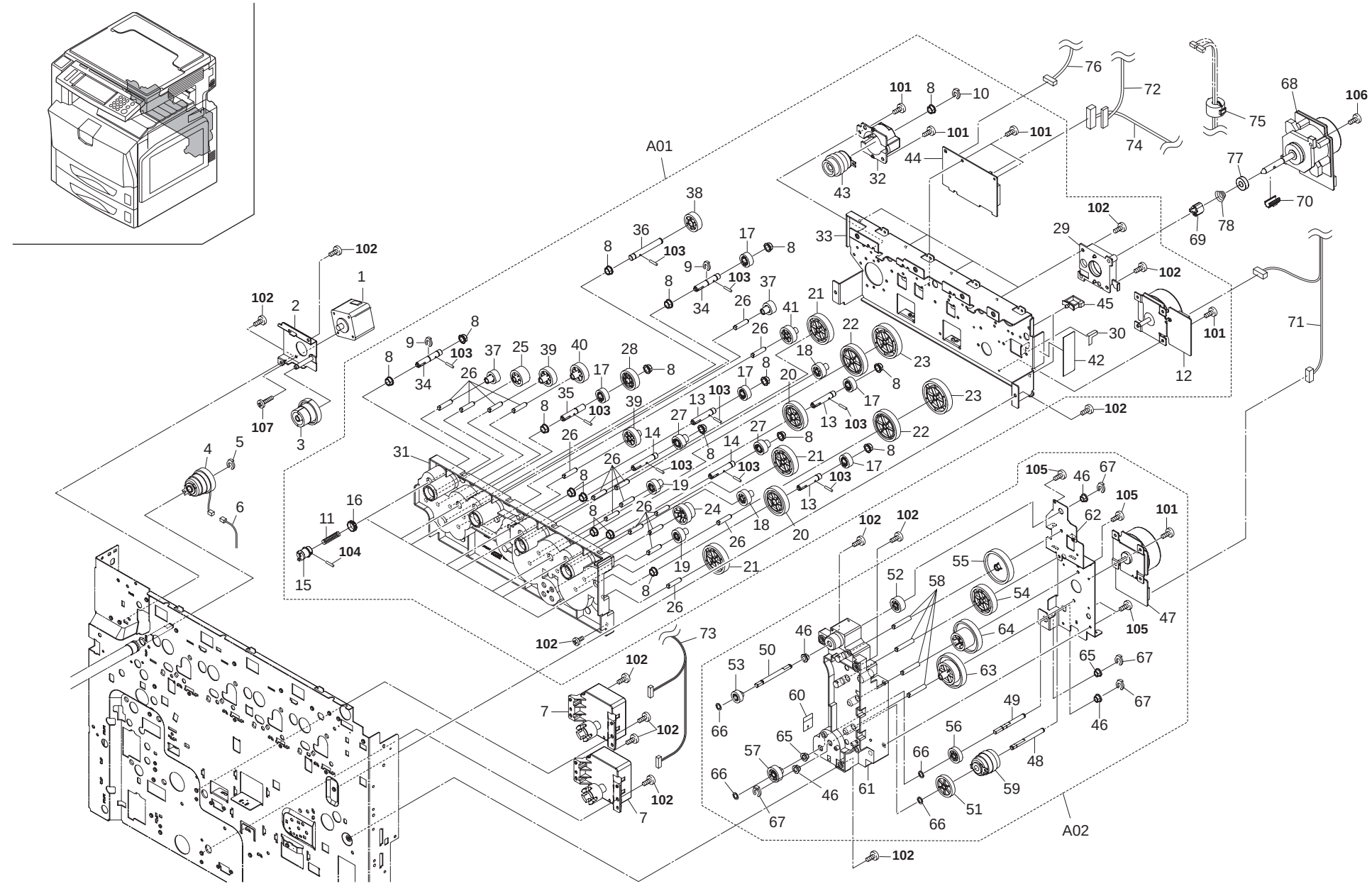
A01
A02
101
102
103
104
105
106
107

FIG. 16 Driving Unit I (40/35ppm)



| | Ref. No. | Part.No. | Alternative. | Description | Quantity 110 | 120 | 230 | 240 |
|---|---|---|---|---|---|---|---|---|
| ⊙ | 1 | 302JD94010 | 2JD94010 | PARTS,MOTOR IMAGE SP | | 1 | 1 | 1 |
| | 2 | 302JD31110 | 2JD31110 | PLATE DRIVE TC | | 1 | 1 | 1 |
| ⊙ | 3 | 302JD31240 | 2JD31240 | GEAR Z72L Z30L TC | | 1 | 1 | 1 |
| ⊙ | 4 | 302FZ31810 | 2FZ31810 | CLUTCH REGIST 8 | | 1 | 1 | 1 |
| | 5 | 2BC06980 | | STOPPER 5 | | 1 | 1 | 1 |
| | 6 | 302FZ46761 | 2FZ46761 | WIRE REG CLT JOINT | | 1 | 1 | 1 |
| ⊙ | 7 | 302GR44112 | 2GR44112 | MOTOR L FT | | 2 | 2 | 2 |
| ⊙ | A01 | 302JD93030 | 2JD93030 | PARTS MAIN DRIVE ASSY | | 1 | 1 | 1 |
| | 8 | •2BC06510 | | BUSH NG 8 | | 18 | 18 | 18 |
| | 9 | •2BC06910 | | STOPPER 6 | | 2 | 2 | 2 |
| | 10 | •2BC06980 | | STOPPER 5 | | 1 | 1 | 1 |
| | 11 | •2BG22530 | | SPRING COUPL NG DLP | | 8 | 8 | 8 |
| ⊙ | 12 | •302FZ31030 | 2FZ31030 | MOTOR DLP | | 1 | 1 | 1 |
| | 13 | •302FZ31180 | 2FZ31180 | SHAFT DLP DRIVE | | 3 | 3 | 3 |
| | 14 | •302FZ31190 | 2FZ31190 | SHAFT CLN DRIVE | | 2 | 2 | 2 |
| ⊙ | 15 | •302FZ31250 | 2FZ31250 | COUPLING DLP DRIVE | | 8 | 8 | 8 |
| | 16 | •302FZ31280 | 2FZ31280 | COLLAR DLP COUPL NG | | 8 | 8 | 8 |
| ⊙ | 17 | •302FZ31330 | 2FZ31330 | GEAR Z22L DLP | | 6 | 6 | 6 |
| ⊙ | 18 | •302FZ31340 | 2FZ31340 | GEAR Z24R | | 2 | 2 | 2 |
| ⊙ | 19 | •302FZ31350 | 2FZ31350 | GEAR Z22R | | 2 | 2 | 2 |
| ⊙ | 20 | •302FZ31360 | 2FZ31360 | GEAR Z50L | | 2 | 2 | 2 |
| ⊙ | 21 | •302FZ31370 | 2FZ31370 | GEAR Z52R | | 3 | 3 | 3 |
| ⊙ | 22 | •302FZ31380 | 2FZ31380 | GEAR Z55L | | 2 | 2 | 2 |
| ⊙ | 23 | •302FZ31390 | 2FZ31390 | GEAR Z60L | | 2 | 2 | 2 |
| ⊙ | 24 | •302FZ31401 | 2FZ31401 | GEAR Z54L-Z26L | | 1 | 1 | 1 |
| ⊙ | 25 | •302FZ31600 | 2FZ31600 | GEAR Z28R | | 1 | 1 | 1 |
| | 26 | •302FZ31720 | 2FZ31720 | PIN MAIN DRIVE | | 17 | 17 | 17 |
| ⊙ | 27 | •302FZ31850 | 2FZ31850 | GEAR Z22L CLN | | 2 | 2 | 2 |
| ⊙ | 28 | •302FZ31890 | 2FZ31890 | GEAR Z35L DLP | | 1 | 1 | 1 |
| | 29 | •302FZ32051 | 2FZ32051 | HOLDER DRUM MOTOR | | 4 | 4 | 4 |
| | 30 | •302FZ39800 | 2FZ39800 | SHEET DLP MOTOR | | 1 | 1 | 1 |
| | 31 | •302JD31040 | 2JD31040 | HOLDER MA N DRIVE | | 1 | 1 | 1 |
| | 32 | •302JD31070 | 2JD31070 | HOLDER DLP CL | | 1 | 1 | 1 |
| | 33 | •302JD31080 | 2JD31080 | PLATE MAIN DRIVE | | 1 | 1 | 1 |
| | 34 | •302JD31120 | 2JD31120 | SHAFT CLN DRIVE | | 2 | 2 | 2 |
| | 35 | •302JD31130 | 2JD31130 | SHAFT DLP K | | 1 | 1 | 1 |
| | 36 | •302JD31140 | 2JD31140 | SHAFT DLP CL | | 1 | 1 | 1 |
| ⊙ | 37 | •302JD31150 | 2JD31150 | GEAR Z20R | | 2 | 2 | 2 |
| ⊙ | 38 | •302JD31160 | 2JD31160 | GEAR Z31R CL | | 1 | 1 | 1 |
| ⊙ | 39 | •302JD31170 | 2JD31170 | GEAR Z31L | | 2 | 2 | 2 |
| ⊙ | 40 | •302JD31180 | 2JD31180 | GEAR Z32R | | 1 | 1 | 1 |
| ⊙ | 41 | •302JD31190 | 2JD31190 | GEAR Z29R | | 1 | 1 | 1 |
| | 42 | •302JD31250 | 2JD31250 | SHEET MAIN DRIVE | | 1 | 1 | 1 |
| ⊙ | 43 | •302JD94020 | 2JD94020 | PARTS,CLUTCH DLP 8 SP | | 1 | 1 | 1 |
| ⊙ | 44 | •302JD94090 | 2JD94090 | PARTS,PWB MOTOR DRIVER ASSY SP | | 1 | 1 | 1 |
| | 45 | •7YZM610004++H01 | YZ012210 | ACCESS SADDLE | | 2 | 2 | 2 |
| ⊙ | A02 | 302JD93020 | 2JD93020 | PARTS MPF DRIVE ASSY | | 1 | 1 | 1 |
| | 46 | •2BG22960 | | BUSH 6 | | 4 | 4 | 4 |
| ⊙ | 47 | •302FZ31030 | 2FZ31030 | MOTOR DLP | | 1 | 1 | 1 |
| | 48 | •302FZ31160 | 2FZ31160 | SHAFT MPF CL | | 1 | 1 | 1 |
| | 49 | •302FZ31220 | 2FZ31220 | SHAFT BYPASS DRIVE | | 1 | 1 | 1 |
| | 50 | •302FZ31230 | 2FZ31230 | SHAFT BRS DRIVE | | 1 | 1 | 1 |
| ⊙ | 51 | •302FZ31300 | 2FZ31300 | GEAR Z38R MPF | | 1 | 1 | 1 |
| ⊙ | 52 | •302FZ31310 | 2FZ31310 | GEAR Z24R BRS | | 1 | 1 | 1 |
| ⊙ | 53 | •302FZ31320 | 2FZ31320 | GEAR Z20S BRS | | 1 | 1 | 1 |
| ⊙ | 54 | •302FZ31370 | 2FZ31370 | GEAR Z52R | | 1 | 1 | 1 |
| ⊙ | 55 | •302FZ31390 | 2FZ31390 | GEAR Z60L | | 1 | 1 | 1 |
| ⊙ | 56 | •302FZ31540 | 2FZ31540 | GEAR Z26L BYPASS | | 1 | 1 | 1 |
| ⊙ | 57 | •302FZ31550 | 2FZ31550 | GEAR Z27S BYPASS | | 1 | 1 | 1 |
| | 58 | •302FZ31710 | 2FZ31710 | P N MPF DRIVE | | 4 | 4 | 4 |
| ⊙ | 59 | •302FZ31820 | 2FZ31820 | CLUTCH FEED 6 | | 1 | 1 | 1 |
| | 60 | •302FZ32060 | 2FZ32060 | SEAL MPF CL | | 1 | 1 | 1 |
| | 61 | •302JD31060 | 2JD31060 | HOLDER MPF DRIVE | | 1 | 1 | 1 |
| | 62 | •302JD31100 | 2JD31100 | PLATE MPF DRIVE | | 1 | 1 | 1 |
| ⊙ | 63 | •302JD31220 | 2JD31220 | GEAR Z85L-Z47R MPF | | 1 | 1 | 1 |
| ⊙ | 64 | •302JD31230 | 2JD31230 | GEAR Z86L Z39L MPF | | 1 | 1 | 1 |
| | 65 | •3CY07080 | | BUSHING 6 | | 2 | 2 | 2 |
| | 66 | •5MVS665KB001 | 2BM40060 | CUT WASHER | | 4 | 4 | 4 |
| | 67 | •5MVX111DN003 | 2A806250 | RING STOPPER /A-49 FEED A4 | | 4 | 4 | 4 |
| ⊙ | 68 | 302JD93130 | 2JD93130 | PARTS MOTOR DRUM | | 4 | 4 | 4 |
| ⊙ | 69 | 302FZ31270 | 2FZ31270 | JOINT DRUM | | 4 | 4 | 4 |
| | 70 | 302FZ31990 | 2FZ31990 | STOPPER D MOTOR | | 4 | 4 | 4 |
| | 71 | 302FZ46081 | 2FZ46081 | WIRE DLP MOTOR | | 1 | 1 | 1 |
| | 72 | 302JD46040 | 2JD46040 | WIRE DRUM MOTOR SIG | | 1 | 1 | 1 |
| | 73 | 302FZ46250 | 2FZ46250 | WIRE LIFT MOT | | 1 | 1 | 1 |
| | 74 | 302JD46050 | 2JD46050 | WIRE DRM MOT A | | 1 | 1 | 1 |
| | 75 | 3HK27050 | | CORE 8-16X10 | | 1 | 1 | 1 |
| | 76 | 302JD46130 | 2JD46130 | WIRE TRNS MOT JOINT | | 1 | 1 | 1 |
| | 77 | 2FG20310 | | BEAR NG PRESS ROLLER | | 4 | 4 | 4 |
| | 78 | 302BG22021 | 2BG22021 | SPRING JOINT D | | 4 | 4 | 4 |
| | 101 | 5MBTPB3006TW++R | B1A53060 | B ND T.T SCREW(+) / M3 X 6 CRFREE S-T | | | | |
| | 102 | B1A54080 | | +BIND TAP-TITE S SCREW M4X08 | | | | |
| | 103 | 5MBP2012WXSP | E0020120 | SPRING PIN / M2 X 12 S-BLK | | | | |
| | 104 | E5125120 | | PARALLEL P N H7A 2.5X12 SUS | | | | |
| | 105 | 5MBTPB3008PW++R | B1A63080 | B ND T.T SCREW(+) / M3 X 8 CRFREE P-T | | | | |
| | 106 | B1B54300 | | +BIND TAP-TITE S SCREW M4X30(TRIVAL | | | | |
| | 107 | B1B03050 | | +BIND SCREW M3X05(TRIVALENT CHROM | | | | |

- Parts with "•" are component parts or sub-assemblies of the assembly appearing immediately above them.
- Parts with "⊙" indicate regular maintenance parts.

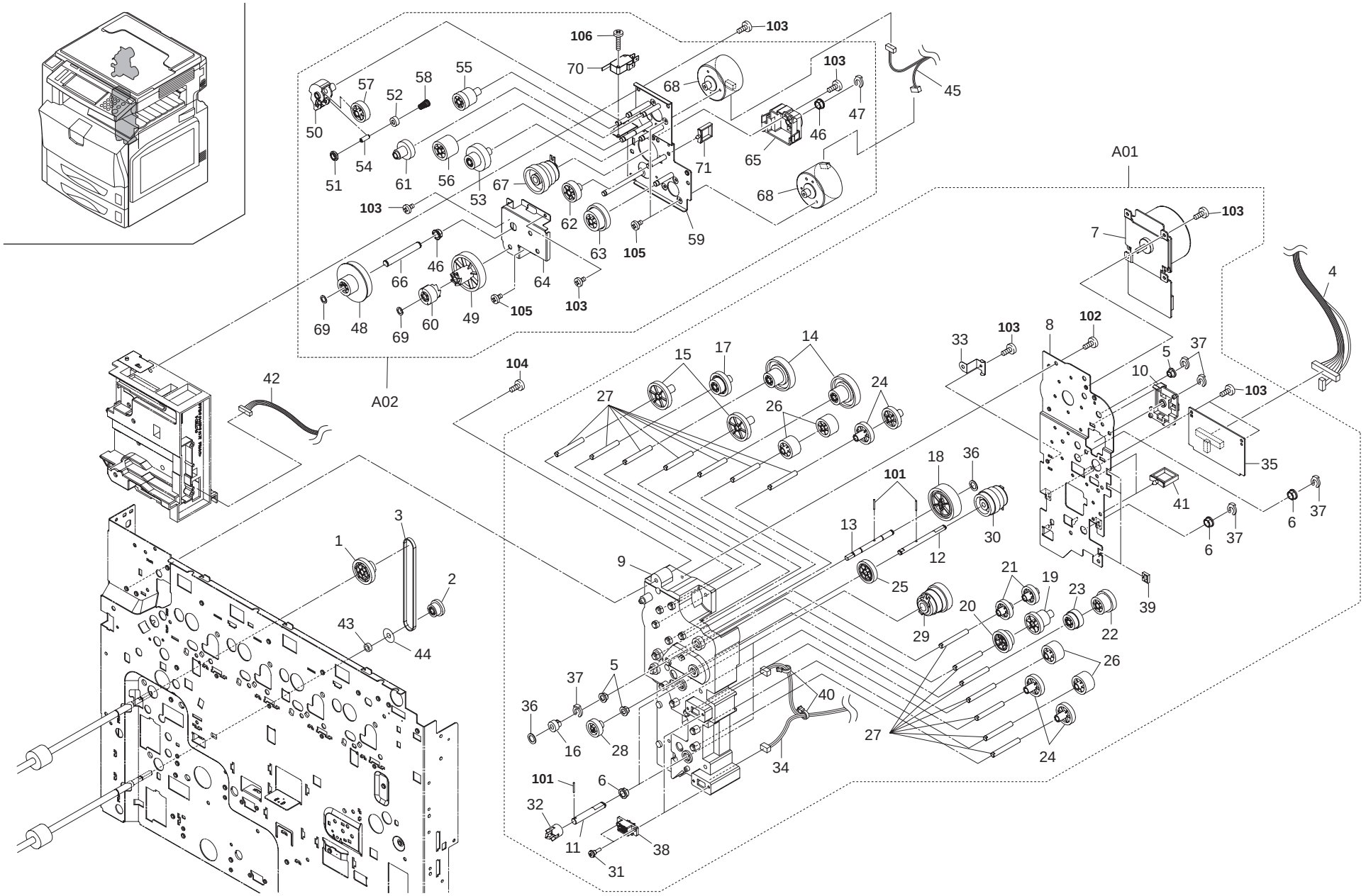
A01
A02
101
102
103
104
105
106

FIG. 17 Driving Unit II (25/25ppm) (32/25ppm) (32/32ppm)



| | Ref. No. | Part.No. | Alternative. | Description | Quantity | | | |
|---|---|---|---|---|---|---|---|---|
| | | | | | 110 | 120 | 230 | 240 |
| ⊙ | 1 | 302FZ31520 | 2FZ31520 | GEAR Z38R DSK | 1 | 1 | 1 | 1 |
| ⊙ | 2 | 302FZ31730 | 2FZ31730 | PULLEY 26 FEED | 1 | 1 | 1 | 1 |
| ⊙ | 3 | 302FZ31260 | 2FZ31260 | BELT FEED DRIVE | 1 | 1 | 1 | 1 |
| | 4 | 302FZ46020 | 2FZ46020 | WIRE JOINT | 1 | 1 | 1 | 1 |
| ⊙ | A01 | 302FZ93281 | 2FZ93281 | PARTS FEED DRIVE ASS'Y | 1 | 1 | 1 | 1 |
| | 5 | •2BG22960 | | BUSH 6 | 3 | 3 | 3 | 3 |
| | 6 | •2BG22980 | | BUSH 8 | 4 | 4 | 4 | 4 |
| ⊙ | 7 | •302FZ31020 | 2FZ31020 | MOTOR FEED | 1 | 1 | 1 | 1 |
| | 8 | •302FZ31120 | 2FZ31120 | PLATE FEED DRIVE | 1 | 1 | 1 | 1 |
| | 9 | •302FZ31130 | 2FZ31130 | HOLDER FEED DRIVE | 1 | 1 | 1 | 1 |
| | 10 | •302FZ31170 | 2FZ31170 | HOLDER CLUTCH | 1 | 1 | 1 | 1 |
| | 11 | •302FZ31200 | 2FZ31200 | SHAFT FEED DRIVE | 2 | 2 | 2 | 2 |
| | 12 | •302FZ31210 | 2FZ31210 | SHAFT FEED 2 DRIVE | 1 | 1 | 1 | 1 |
| | 13 | •302FZ31240 | 2FZ31240 | SHAFT LSU DRIVE | 1 | 1 | 1 | 1 |
| ⊙ | 14 | •302FZ31420 | 2FZ31420 | GEAR Z81L-Z22R | 2 | 2 | 2 | 2 |
| ⊙ | 15 | •302FZ31430 | 2FZ31430 | GEAR Z42L | 2 | 2 | 2 | 2 |
| ⊙ | 16 | •302FZ31440 | 2FZ31440 | GEAR Z14R LSU | 1 | 1 | 1 | 1 |
| ⊙ | 17 | •302FZ31450 | 2FZ31450 | GEAR Z36L-Z22R REG | 1 | 1 | 1 | 1 |
| ⊙ | 18 | •302FZ31460 | 2FZ31460 | GEAR Z52L LSU | 1 | 1 | 1 | 1 |
| ⊙ | 19 | •302FZ31470 | 2FZ31470 | GEAR Z33R-Z23R CL | 1 | 1 | 1 | 1 |
| ⊙ | 20 | •302FZ31480 | 2FZ31480 | GEAR Z33R-Z23R FEED | 1 | 1 | 1 | 1 |
| ⊙ | 21 | •302FZ31490 | 2FZ31490 | GEAR Z28L | 2 | 2 | 2 | 2 |
| ⊙ | 22 | •302FZ31500 | 2FZ31500 | GEAR Z32L-Z26R FEED CL | 1 | 1 | 1 | 1 |
| ⊙ | 23 | •302FZ31510 | 2FZ31510 | GEAR Z26R-Z23L FEED CL | 1 | 1 | 1 | 1 |
| ⊙ | 24 | •302FZ31530 | 2FZ31530 | GEAR Z32L | 4 | 4 | 4 | 4 |
| ⊙ | 25 | •302FZ31590 | 2FZ31590 | GEAR Z35L CL | 1 | 1 | 1 | 1 |
| ⊙ | 26 | •302FZ31600 | 2FZ31600 | GEAR Z28R | 4 | 4 | 4 | 4 |
| | 27 | •302FZ31740 | 2FZ31740 | PIN DRIVE FEED | 14 | 14 | 14 | 14 |
| ⊙ | 28 | •302FZ31800 | 2FZ31800 | GEAR Z25R JOINT | 1 | 1 | 1 | 1 |
| ⊙ | 29 | •302FZ31810 | 2FZ31810 | CLUTCH REGIST 8 | 2 | 2 | 2 | 2 |
| ⊙ | 30 | •302FZ31820 | 2FZ31820 | CLUTCH FEED 6 | 1 | 1 | 1 | 1 |
| | 31 | •302FZ31840 | 2FZ31840 | STUD SCREW 435 | 4 | 4 | 4 | 4 |
| | 32 | •302FZ32070 | 2FZ32070 | COUPLING PAPER FEED | 2 | 2 | 2 | 2 |
| | 33 | •302FZ39720 | 2FZ39720 | PLATE EARTH FEED | 1 | 1 | 1 | 1 |
| | 34 | •302FZ46100 | 2FZ46100 | WIRE PRE FEED | 1 | 1 | 1 | 1 |
| ⊙ | 35 | •302FZ94681 | 2FZ94681 | PARTS,PWB FEED ASS'Y,SP | 1 | 1 | 1 | 1 |
| | 36 | •5MVS665KB001 | 2BM40060 | CUT WASHER | 2 | 2 | 2 | 2 |
| | 37 | •5MVX111DN003 | 2A806250 | R NG STOPPER /A-49 FEED A4 | 5 | 5 | 5 | 5 |
| | 38 | •7YCC08B2046+H02 | YC026130 | CONNECTOR | 2 | 2 | 2 | 2 |
| | 39 | •7YZM210006++H01 | YZ038000 | ACCESS.EDGING | 3 | 3 | 3 | 3 |
| | 40 | •7YZM410001++H01 | YZ037950 | ACCESS.BAND | 2 | 2 | 2 | 2 |
| | 41 | •7YZM610003++H01 | YZ010250 | ACCESS SADDLE | 2 | 2 | 2 | 2 |
| | 42 | 302FZ46050 | 2FZ46050 | WIRE TRANSFER | 1 | 1 | 1 | 1 |
| | 43 | 3HL10170 | | COLLAR EJECT | 1 | 1 | 1 | 1 |
| | 44 | 302FZ29140 | 2FZ29140 | COLLAR DU PULLEY | 1 | 1 | 1 | 1 |
| | 45 | 302FZ46411 | 2FZ46411 | WIRE EXIT MOT | 1 | 1 | 1 | 1 |
| ⊙ | A02 | 302FZ93270 | 2FZ93270 | PARTS FUSER DRIVE ASS'Y | 1 | 1 | 1 | 1 |
| | 46 | •2BC06510 | | BUSH NG 8 | 2 | 2 | 2 | 2 |
| | 47 | •2BC06980 | | STOPPER 5 | 1 | 1 | 1 | 1 |
| ⊙ | 48 | •302FZ31570 | 2FZ31570 | GEAR Z20L FUSER DRIVE | 1 | 1 | 1 | 1 |
| ⊙ | 49 | •302FZ31580 | 2FZ31580 | GEAR Z46 FUSER | 1 | 1 | 1 | 1 |
| | 50 | •302FZ31671 | 2FZ31671 | JOINT GEAR EXIT | 1 | 1 | 1 | 1 |
| ⊙ | 51 | •302FZ31680 | 2FZ31680 | PULLEY EXIT DRIVE | 1 | 1 | 1 | 1 |
| ⊙ | 52 | •302FZ31690 | 2FZ31690 | GEAR EXIT Z20 | 1 | 1 | 1 | 1 |
| ⊙ | 53 | •302FZ31700 | 2FZ31700 | GEAR EXIT Z63 Z21 | 1 | 1 | 1 | 1 |
| | 54 | •302FZ31750 | 2FZ31750 | P N EXIT | 1 | 1 | 1 | 1 |
| ⊙ | 55 | •302FZ31760 | 2FZ31760 | GEAR EXIT Z39Z26 | 1 | 1 | 1 | 1 |
| ⊙ | 56 | •302FZ31770 | 2FZ31770 | GEAR EXIT Z30 JOINT | 1 | 1 | 1 | 1 |
| ⊙ | 57 | •302FZ31780 | 2FZ31780 | GEAR EXIT Z48 | 1 | 1 | 1 | 1 |
| | 58 | •302FZ31790 | 2FZ31790 | SPRING EXIT 60 | 1 | 1 | 1 | 1 |
| | 59 | •302FZ31861 | 2FZ31861 | MOUNT FUSER DRIVE | 1 | 1 | 1 | 1 |
| ⊙ | 60 | •302FZ31870 | 2FZ31870 | GEAR Z20 FUSER | 1 | 1 | 1 | 1 |
| ⊙ | 61 | •302FZ31910 | 2FZ31910 | GEAR EXIT Z45Z22 | 1 | 1 | 1 | 1 |
| ⊙ | 62 | •302FZ31920 | 2FZ31920 | GEAR Z30 FUSER | 1 | 1 | 1 | 1 |
| ⊙ | 63 | •302FZ31930 | 2FZ31930 | GEAR Z65-Z29 FUSER | 1 | 1 | 1 | 1 |
| | 64 | •302FZ32010 | 2FZ32010 | PLATE FUSER DRIVE | 1 | 1 | 1 | 1 |
| | 65 | •302FZ32021 | 2FZ32021 | HOLDER FUSER CL | 1 | 1 | 1 | 1 |
| | 66 | •302FZ32030 | 2FZ32030 | SHAFT FUSER DRIVE | 1 | 1 | 1 | 1 |
| ⊙ | 67 | •302FZ32040 | 2FZ32040 | CLUTCH FUSER 8 | 1 | 1 | 1 | 1 |
| ⊙ | 68 | •302FZ94290 | 2FZ94290 | PARTS,MOTOR FUSER SP | 2 | 2 | 2 | 2 |
| | 69 | •5MVS665KB001 | 2BM40060 | CUT WASHER | 2 | 2 | 2 | 2 |
| | 70 | •7SM010303+++H01 | SM037910 | SW.MICRO | 1 | 1 | 1 | 1 |
| | 71 | •7YZM610003++H01 | YZ010250 | ACCESS SADDLE | 1 | 1 | 1 | 1 |
| | 101 | 5MBP2012WXSP | E0020120 | SPRING PIN / M2 X 12 S-BLK | | | | |
| | 102 | 5MBTPB4010PW++R | B1A64100 | B ND T.T SCREW(+) / M4 X 10 CRFREE P-T | | | | |
| | 103 | 5MBTPB3006TW++R | B1A53060 | B ND T.T SCREW(+) / M3 X 6 CRFREE S-T | | | | |
| | 104 | B1A54080 | | +BIND TAP-TITE S SCREW M4X08 | | | | |
| | 105 | B4A03030 | | +TP-A SCREW M3X03(TRIVALENT CHRO M | | | | |
| | 106 | 5MBTPB3014TW++R | B1A53140 | B ND T.T SCREW(+) / M3 X 14 CRFREE S-T | | | | |

- Parts with "•" are component parts or sub-assemblies of the assembly appearing immediately above them.
- Parts with "⊙" indicate regular maintenance parts.

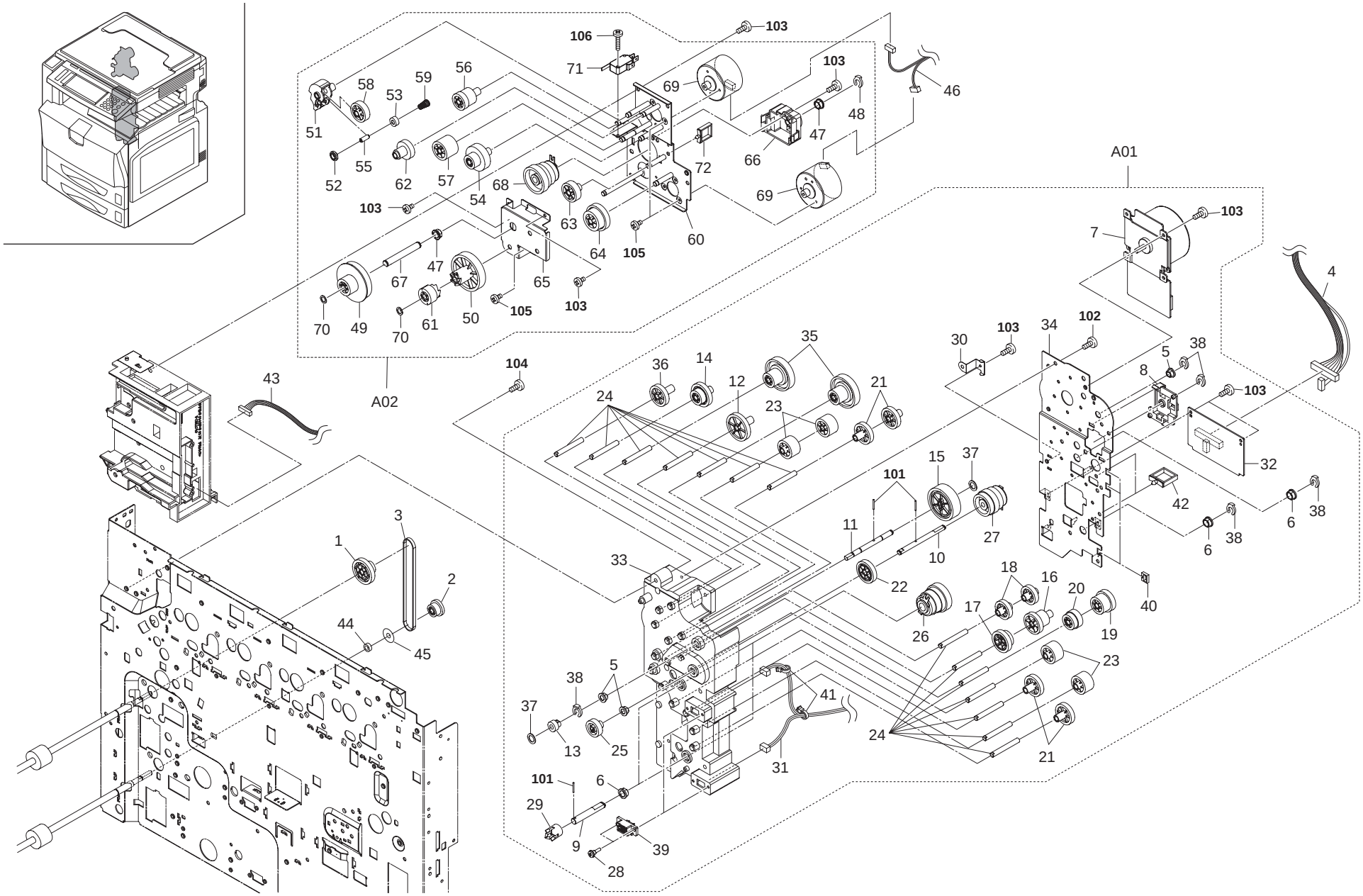
106
103
71
69
103
46
58
59
56
53
51
48
47
66
72
52
55
62
57
54
68
69
103
63
60
64
105
47
67
65
70
49
70
61
50
105
103
A01
103
7
4
103
34
102
30
38
5
8
103
32
43
104
36
14
35
12
21
24
23
15
37
101
42
6
38
6
38
3
1
2
11
27
10
33
22
18
16
20
17
40
44
45
26
19
23
5
38
41
37
13
25
24
21
31
101
6
29
9
39
28
A02

FIG. 17 Driving Unit II (40/35ppm)

| | Ref. No. | Part.No. | Alternative. | Description | Quantity 110 | 120 | 230 | 240 |
|---|---|---|---|---|---|---|---|---|
| ⊙ | 1 | 302FZ31520 | 2FZ31520 | GEAR Z38R DSK | | 1 | 1 | 1 |
| ⊙ | 2 | 302FZ31730 | 2FZ31730 | PULLEY 26 FEED | | 1 | 1 | 1 |
| ⊙ | 3 | 302FZ31260 | 2FZ31260 | BELT FEED DRIVE | | 1 | 1 | 1 |
| | 4 | 302FZ46020 | 2FZ46020 | WIRE JOINT | | 1 | 1 | 1 |
| ⊙ | A01 | 302JD93040 | 2JD93040 | PARTS FEED DRIVE ASSY | | 1 | 1 | 1 |
| | 5 | •2BG22960 | | BUSH 6 | | 3 | 3 | 3 |
| | 6 | •2BG22980 | | BUSH 8 | | 4 | 4 | 4 |
| ⊙ | 7 | •302FZ31020 | 2FZ31020 | MOTOR FEED | | 1 | 1 | 1 |
| | 8 | •302FZ31170 | 2FZ31170 | HOLDER CLUTCH | | 1 | 1 | 1 |
| | 9 | •302FZ31200 | 2FZ31200 | SHAFT FEED DRIVE | | 2 | 2 | 2 |
| | 10 | •302FZ31210 | 2FZ31210 | SHAFT FEED 2 DRIVE | | 1 | 1 | 1 |
| | 11 | •302FZ31240 | 2FZ31240 | SHAFT LSU DRIVE | | 1 | 1 | 1 |
| ⊙ | 12 | •302FZ31430 | 2FZ31430 | GEAR Z42L | | 1 | 1 | 1 |
| ⊙ | 13 | •302FZ31440 | 2FZ31440 | GEAR Z14R LSU | | 1 | 1 | 1 |
| ⊙ | 14 | •302FZ31450 | 2FZ31450 | GEAR Z36L-Z22R REG | | 1 | 1 | 1 |
| ⊙ | 15 | •302FZ31460 | 2FZ31460 | GEAR Z52L LSU | | 1 | 1 | 1 |
| ⊙ | 16 | •302FZ31470 | 2FZ31470 | GEAR Z33R-Z23R CL | | 1 | 1 | 1 |
| ⊙ | 17 | •302FZ31480 | 2FZ31480 | GEAR Z33R-Z23R FEED | | 1 | 1 | 1 |
| ⊙ | 18 | •302FZ31490 | 2FZ31490 | GEAR Z28L | | 2 | 2 | 2 |
| ⊙ | 19 | •302FZ31500 | 2FZ31500 | GEAR Z32L-Z26R FEED CL | | 1 | 1 | 1 |
| ⊙ | 20 | •302FZ31510 | 2FZ31510 | GEAR Z26R-Z23L FEED CL | | 1 | 1 | 1 |
| ⊙ | 21 | •302FZ31530 | 2FZ31530 | GEAR Z32L | | 4 | 4 | 4 |
| ⊙ | 22 | •302FZ31590 | 2FZ31590 | GEAR Z35L CL | | 1 | 1 | 1 |
| ⊙ | 23 | •302FZ31600 | 2FZ31600 | GEAR Z28R | | 4 | 4 | 4 |
| | 24 | •302FZ31740 | 2FZ31740 | PIN DRIVE FEED | | 14 | 14 | 14 |
| ⊙ | 25 | •302FZ31800 | 2FZ31800 | GEAR Z25R JOINT | | 1 | 1 | 1 |
| ⊙ | 26 | •302FZ31810 | 2FZ31810 | CLUTCH REGIST 8 | | 2 | 2 | 2 |
| ⊙ | 27 | •302FZ31820 | 2FZ31820 | CLUTCH FEED 6 | | 1 | 1 | 1 |
| | 28 | •302FZ31840 | 2FZ31840 | STUD SCREW 435 | | 4 | 4 | 4 |
| | 29 | •302FZ32070 | 2FZ32070 | COUPLING PAPER FEED | | 2 | 2 | 2 |
| | 30 | •302FZ39720 | 2FZ39720 | PLATE EARTH FEED | | 1 | 1 | 1 |
| | 31 | •302FZ46100 | 2FZ46100 | WIRE PRE FEED | | 1 | 1 | 1 |
| ⊙ | 32 | •302FZ94681 | 2FZ94681 | PARTS,PWB FEED ASS'Y,SP | | 1 | 1 | 1 |
| | 33 | •302JD31050 | 2JD31050 | HOLDER FEED DRIVE | | 1 | 1 | 1 |
| | 34 | •302JD31090 | 2JD31090 | PLATE FEED DRIVE | | 1 | 1 | 1 |
| ⊙ | 35 | •302JD31200 | 2JD31200 | GEAR Z70L Z26R FEED | | 2 | 2 | 2 |
| ⊙ | 36 | •302JD31210 | 2JD31210 | GEAR Z33L FEED | | 1 | 1 | 1 |
| | 37 | •5MVS665KB001 | 2BM40060 | CUT WASHER | | 2 | 2 | 2 |
| | 38 | •5MVX111DN003 | 2A806250 | R NG STOPPER /A-49 FEED A4 | | 5 | 5 | 5 |
| | 39 | •7YCC08B2046+H02 | YC026130 | CONNECTOR | | 2 | 2 | 2 |
| | 40 | •7YZM210006++H01 | YZ038000 | ACCESS.EDGING | | 3 | 3 | 3 |
| | 41 | •7YZM410001++H01 | YZ037950 | ACCESS.BAND | | 2 | 2 | 2 |
| | 42 | •7YZM610003++H01 | YZ010250 | ACCESS SADDLE | | 2 | 2 | 2 |
| | 43 | 302FZ46050 | 2FZ46050 | WIRE TRANSFER | | 1 | 1 | 1 |
| | 44 | 3HL10170 | | COLLAR EJECT | | 1 | 1 | 1 |
| | 45 | 302FZ29140 | 2FZ29140 | COLLAR DU PULLEY | | 1 | 1 | 1 |
| | 46 | 302FZ46411 | 2FZ46411 | WIRE EXIT MOT | | 1 | 1 | 1 |
| ⊙ | A02 | 302FZ93270 | 2FZ93270 | PARTS FUSER DRIVE ASS'Y | | 1 | 1 | 1 |
| | 47 | •2BC06510 | | BUSH NG 8 | | 2 | 2 | 2 |
| | 48 | •2BC06980 | | STOPPER 5 | | 1 | 1 | 1 |
| ⊙ | 49 | •302FZ31570 | 2FZ31570 | GEAR Z20L FUSER DRIVE | | 1 | 1 | 1 |
| ⊙ | 50 | •302FZ31580 | 2FZ31580 | GEAR Z46 FUSER | | 1 | 1 | 1 |
| | 51 | •302FZ31671 | 2FZ31671 | JOINT GEAR EXIT | | 1 | 1 | 1 |
| ⊙ | 52 | •302FZ31680 | 2FZ31680 | PULLEY EXIT DRIVE | | 1 | 1 | 1 |
| ⊙ | 53 | •302FZ31690 | 2FZ31690 | GEAR EXIT Z20 | | 1 | 1 | 1 |
| ⊙ | 54 | •302FZ31700 | 2FZ31700 | GEAR EXIT Z63 Z21 | | 1 | 1 | 1 |
| | 55 | •302FZ31750 | 2FZ31750 | P N EXIT | | 1 | 1 | 1 |
| ⊙ | 56 | •302FZ31760 | 2FZ31760 | GEAR EXIT Z39Z26 | | 1 | 1 | 1 |
| ⊙ | 57 | •302FZ31770 | 2FZ31770 | GEAR EXIT Z30 JOINT | | 1 | 1 | 1 |
| ⊙ | 58 | •302FZ31780 | 2FZ31780 | GEAR EXIT Z48 | | 1 | 1 | 1 |
| | 59 | •302FZ31790 | 2FZ31790 | SPRING EXIT 60 | | 1 | 1 | 1 |
| | 60 | •302FZ31861 | 2FZ31861 | MOUNT FUSER DRIVE | | 1 | 1 | 1 |
| ⊙ | 61 | •302FZ31870 | 2FZ31870 | GEAR Z20 FUSER | | 1 | 1 | 1 |
| ⊙ | 62 | •302FZ31910 | 2FZ31910 | GEAR EXIT Z45Z22 | | 1 | 1 | 1 |
| ⊙ | 63 | •302FZ31920 | 2FZ31920 | GEAR Z30 FUSER | | 1 | 1 | 1 |
| ⊙ | 64 | •302FZ31930 | 2FZ31930 | GEAR Z65-Z29 FUSER | | 1 | 1 | 1 |
| | 65 | •302FZ32010 | 2FZ32010 | PLATE FUSER DRIVE | | 1 | 1 | 1 |
| | 66 | •302FZ32021 | 2FZ32021 | HOLDER FUSER CL | | 1 | 1 | 1 |
| | 67 | •302FZ32030 | 2FZ32030 | SHAFT FUSER DRIVE | | 1 | 1 | 1 |
| ⊙ | 68 | •302FZ32040 | 2FZ32040 | CLUTCH FUSER 8 | | 1 | 1 | 1 |
| ⊙ | 69 | •302FZ94290 | 2FZ94290 | PARTS,MOTOR FUSER SP | | 2 | 2 | 2 |
| | 70 | •5MVS665KB001 | 2BM40060 | CUT WASHER | | 2 | 2 | 2 |
| | 71 | •7SM010303+++H01 | SM037910 | SW.MICRO | | 1 | 1 | 1 |
| | 72 | •7YZM610003++H01 | YZ010250 | ACCESS SADDLE | | 1 | 1 | 1 |
| | 101 | 5MBP2012WXSP | E0020120 | SPRING PIN / M2 X 12 S-BLK | | | | |
| | 102 | 5MBTPB4010PW++R | B1A64100 | B ND T.T SCREW(+) / M4 X 10 CRFREE P-T | | | | |
| | 103 | 5MBTPB3006TW++R | B1A53060 | B ND T.T SCREW(+) / M3 X 6 CRFREE S-T | | | | |
| | 104 | B1A54080 | | +BIND TAP-TITE S SCREW M4X08 | | | | |
| | 105 | B4A03030 | | +TP-A SCREW M3X03(TRIVALENT CHRO M | | | | |
| | 106 | 5MBTPB3014TW++R | B1A53140 | B ND T.T SCREW(+) / M3 X 14 CRFREE S-T | | | | |

- Parts with "•" are component parts or sub-assemblies of the assembly appearing immediately above them.
- Parts with "⊙" indicate regular maintenance parts.

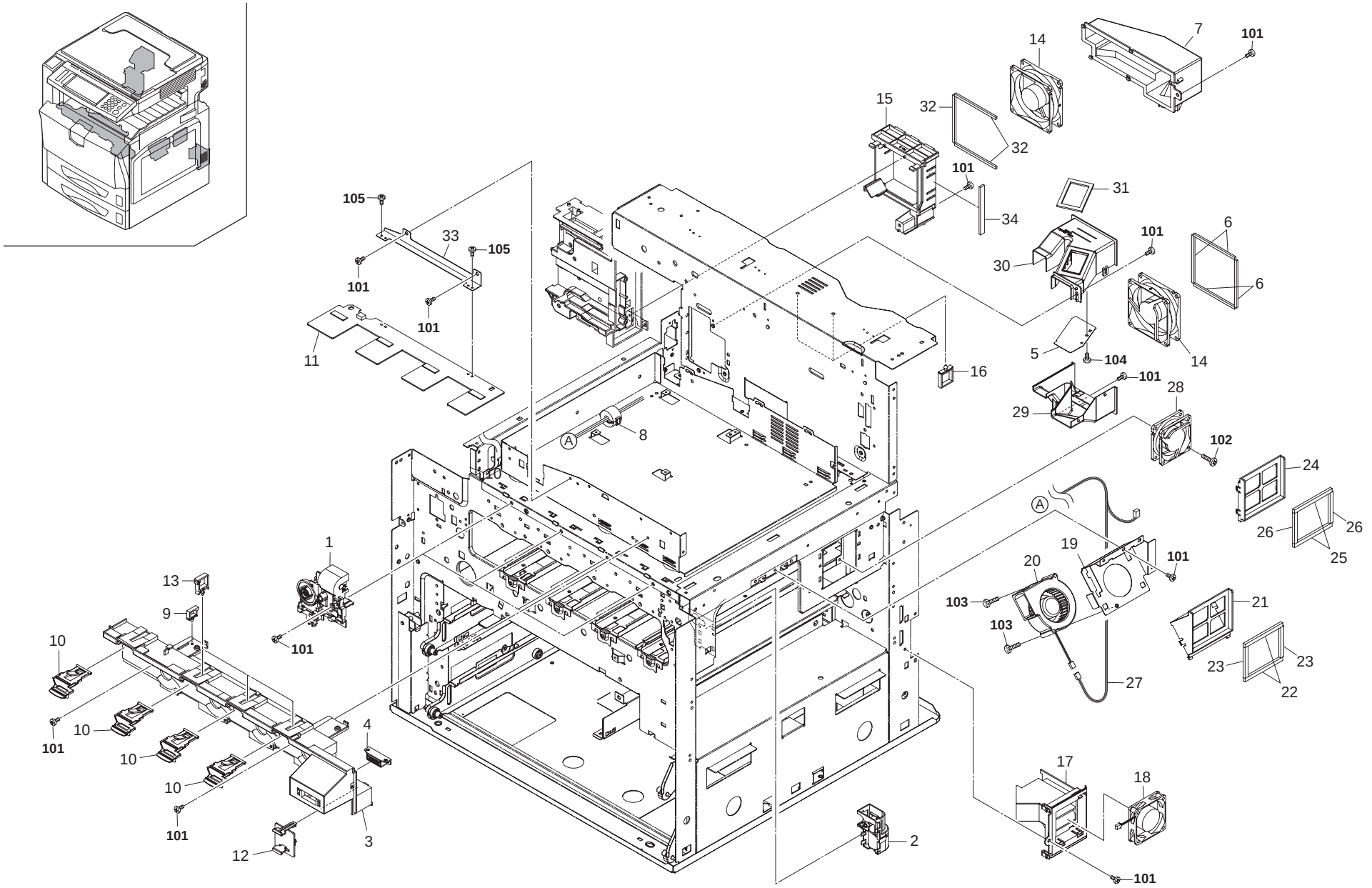
7
101
14
15
32
32
101
34
31
6
6
101
30
14
5
104
101
28
29
102
24
26
26
25
19
101
20
103
103
21
23
23
22
27
17
18
101
2
16
8
A
A
105
33
105
101
101
11
1
101
13
9
10
101
10
10
10
101
4
3
12

FIG. 18 Cooling Unit



| | Ref. No. | Part.No. | Alternative. | Description | Quantity 110 | 120 | 230 | 240 |
|---|---|---|---|---|---|---|---|---|
| ⊙ | 1 | 302FZ93290 | 2FZ93290 | PARTS CONT DRIVE ASS'Y | 4 | 4 | 4 | 4 |
| ⊙ | 2 | 302FZ93460 | 2FZ93460 | PARTS ICL MOTOR ASSY | 1 | 1 | 1 | 1 |
| ⊙ | 3 | 302FZ04520 | 2FZ04520 | COVER INNER UPPER | 1 | 1 | 1 | 1 |
| | 4 | 60804120 | | MAGNET CATCH | 1 | 1 | 1 | 1 |
| | 5 | 302FZ33370 | 2FZ33370 | PLATE DUCT EXIT | 1 | 1 | 1 | 1 |
| | 6 | 302FZ33400 | 2FZ33400 | SEAL BRACKET FAN C | 4 | 4 | 4 | 4 |
| | 7 | 302FZ33360 | 2FZ33360 | DUCT EXIT MOTOR | 1 | 1 | 1 | 1 |
| | 8 | 3HK27050 | | CORE 8-16X10 | 1 | 1 | 1 | 1 |
| | 9 | 7YZM610008++H01 | YZ037940 | ACCESS.SADDLE | 1 | 1 | 1 | 1 |
| ⊙ | 10 | 302FZ04530 | 2FZ04530 | LEVER LOCK CONT | 4 | 4 | 4 | 4 |
| ⊙ | 11 | 302FZ45060 | 2FZ45060 | RF D RECIEVER | 1 | 1 | 1 | 1 |
| ⊙ | 12 | 302FZ04580 | 2FZ04580 | COVER CONNECTER | 1 | 1 | 1 | 1 |
| | 13 | 7YZM610002++H01 | YZ010240 | ACCESS SADDLE | 3 | 3 | 3 | 3 |
| ⊙ | 14 | 2FB27180 | | FAN 80 COOL NG | 2 | 2 | 2 | 2 |
| | 15 | 302FZ33231 | 2FZ33231 | BRACKET FAN D | 1 | 1 | 1 | 1 |
| | 16 | 7YZM610003++H01 | YZ010250 | ACCESS SADDLE | 2 | 2 | 2 | 2 |
| | 17 | 302FZ33191 | 2FZ33191 | BRACKET FAN C | 1 | 1 | 1 | 1 |
| ⊙ | 18 | 302FZ94420 | 2FZ94420 | PARTS,FAN COOLING CONVEY NG SP | 1 | 1 | 1 | 1 |
| | 19 | 302FZ02640 | 2FZ02640 | MOUNT FAN | 1 | 1 | 1 | 1 |
| ⊙ | 20 | 302FZ94380 | 2FZ94380 | PARTS,FAN COOLING DLP 70 SP | 1 | 1 | 1 | 1 |
| | 21 | 302FZ33140 | 2FZ33140 | BRACKET FAN A | 1 | 1 | 1 | 1 |
| | 22 | 302FZ33170 | 2FZ33170 | SEAL BRACKET FAN A | 2 | 2 | 2 | 2 |
| | 23 | 302FZ33180 | 2FZ33180 | SEAL BRACKET FAN B | 2 | 2 | 2 | 2 |
| | 24 | 302FZ33150 | 2FZ33150 | BRACKET FAN B | 1 | 1 | 1 | 1 |
| | 25 | 302FZ33170 | 2FZ33170 | SEAL BRACKET FAN A | 2 | 2 | 2 | 2 |
| | 26 | 302FZ33180 | 2FZ33180 | SEAL BRACKET FAN B | 2 | 2 | 2 | 2 |
| | 27 | 302FZ46091 | 2FZ46091 | WIRE FRONT SIDE | 1 | 1 | 1 | 1 |
| ⊙ | 28 | 2FB27190 | | FAN 60 COOL NG | 1 | 1 | 1 | 1 |
| ⊙ | 29 | 302FZ33011 | 2FZ33011 | DUCT EXIT LOWER | 1 | 1 | 1 | 1 |
| | 30 | 302FZ33020 | 2FZ33020 | DUCT EXIT UPPER | 1 | 1 | 1 | 1 |
| | 31 | 302FZ33380 | 2FZ33380 | SEAL DUCT EXIT | 1 | 1 | 1 | 1 |
| | 32 | 302FZ33411 | 2FZ33411 | SEAL BRACKET FAN D | 3 | 3 | 3 | 3 |
| | 33 | 302FZ02880 | 2FZ02880 | BRACKET PWB RFID | 1 | 1 | 1 | 1 |
| | 34 | 302FZ33420 | 2FZ33420 | SEAL BRACKET FAN E | 1 | 1 | 1 | 1 |

| Ref. No. | Part.No. | Alternative. | Description | Quantity 110 | 120 | 230 | 240 |
|---|---|---|---|---|---|---|---|
| 101 | B1A54080 | | +BIND TAP-TITE S SCREW M4X08 | | | | |
| 102 | B1B54300 | | +BIND TAP-TITE S SCREW M4X30(TRIVAL | | | | |
| 103 | 7BB100435H | BB041540 | B ND T,T SCREW(+)/M4X35 CRFREE S-T | | | | |
| 104 | 5MBTPB3008PW++R | B1A63080 | B ND T.T SCREW(+) / M3 X 8 CRFREE P-T | | | | |
| 105 | 5MBTPB3006TW++R | B1A53060 | B ND T.T SCREW(+) / M3 X 6 CRFREE S-T | | | | |

- Parts with "•" are component parts or sub-assemblies of the assembly appearing immediately above them.
- Parts with "⊙" indicate regular maintenance parts.

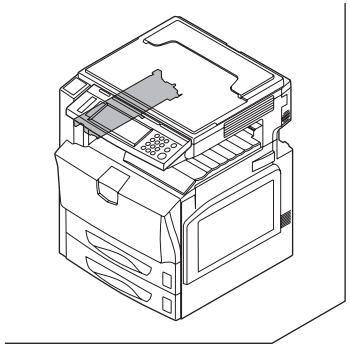

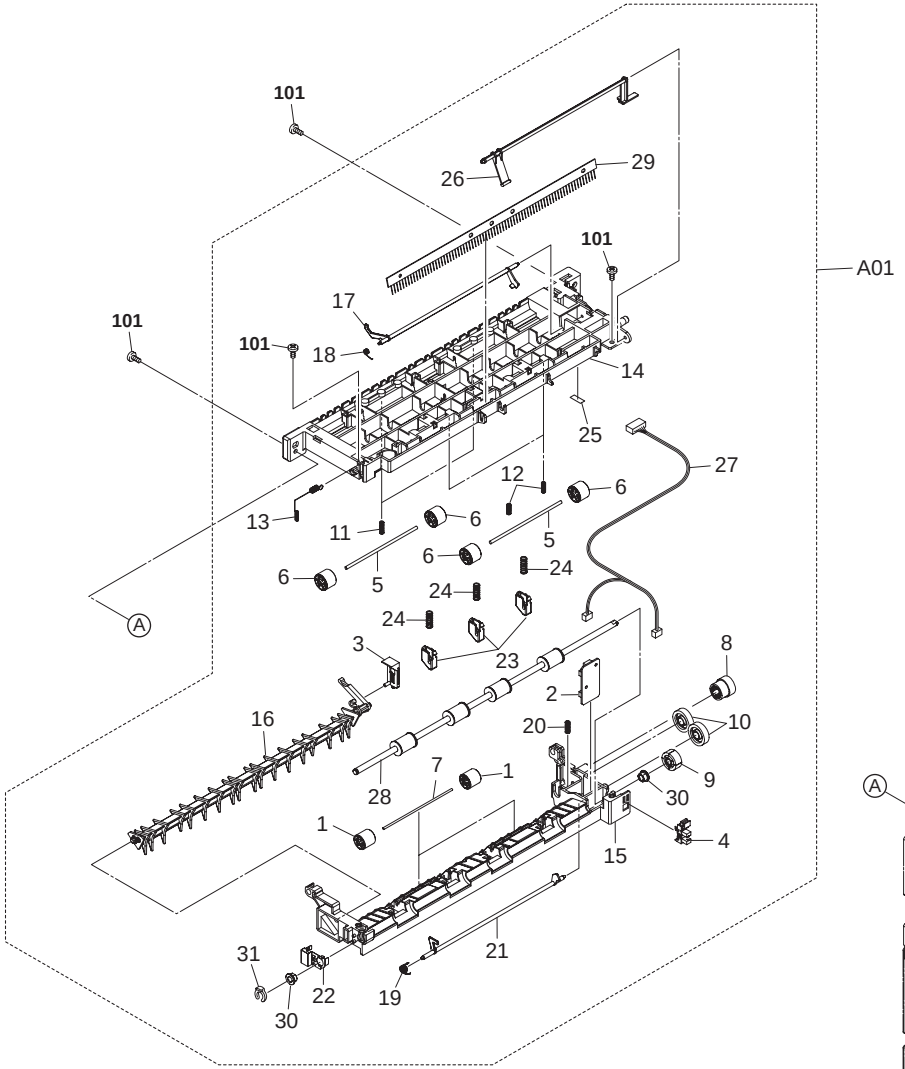
101
101
101
101
26
29
17
18
14
25
A01
27
12
6
13
11
6
5
6
6
24
5
24
24
A
3
23
8
2
16
20
10
7
1
9
28
30
1
4
15
21
31
22
19
30

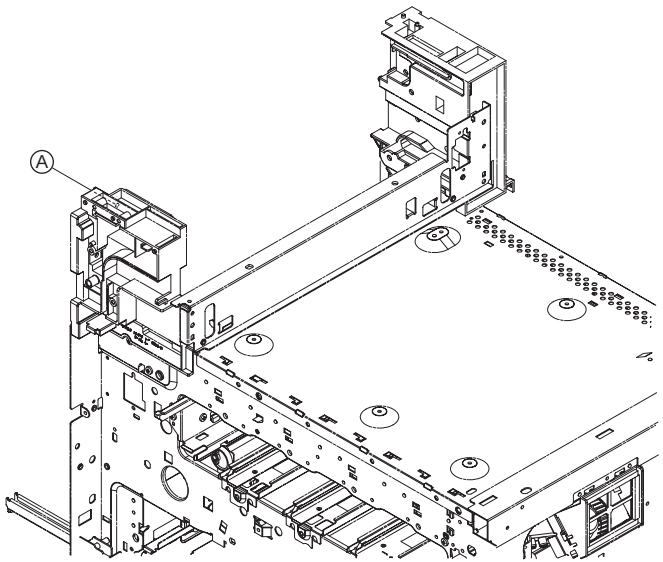
A

| | Ref. No. | Part.No. | Alternative. | Description | Quantity 110 | 120 | 230 | 240 |
|---|---|---|---|---|---|---|---|---|
| ⊙ | A01 | 302FZ93180 | 2FZ93180 | PARTS EXIT ASS'Y | 1 | 1 | 1 | 1 |
| ⊙ | 1 | •2BG20320 | | PULLEY EXIT | 4 | 4 | 4 | 4 |
| ⊙ | 2 | •2C901060 | | PCB EJECT SW ASSY | 1 | 1 | 1 | 1 |
| | 3 | •2C921180 | | ARM LINK | 1 | 1 | 1 | 1 |
| ⊙ | 4 | •2C927210 | | SENSOR 248NL1 | 1 | 1 | 1 | 1 |
| | 5 | •302FZ22140 | 2FZ22140 | SHAFT M DDLE L | 4 | 4 | 4 | 4 |
| ⊙ | 6 | •302FZ22150 | 2FZ22150 | PULLEY MIDDLE | 8 | 8 | 8 | 8 |
| | 7 | •302FZ25380 | 2FZ25380 | SHAFT EXIT PULLEY | 2 | 2 | 2 | 2 |
| ⊙ | 8 | •302FZ28060 | 2FZ28060 | GEAR Z20S-Z23S | 1 | 1 | 1 | 1 |
| ⊙ | 9 | •302FZ28080 | 2FZ28080 | GEAR Z23S EXIT | 1 | 1 | 1 | 1 |
| ⊙ | 10 | •302FZ28090 | 2FZ28090 | GEAR Z29S | 2 | 2 | 2 | 2 |
| | 11 | •302FZ28100 | 2FZ28100 | SPRING EXIT PULLEY | 2 | 2 | 2 | 2 |
| | 12 | •302FZ28110 | 2FZ28110 | SPRING EXIT PULLEY A | 4 | 4 | 4 | 4 |
| | 13 | •302FZ28120 | 2FZ28120 | SPRING EARTH | 1 | 1 | 1 | 1 |
| | 14 | •302FZ28152 | 2FZ28152 | FRAME EXIT UPPER | 1 | 1 | 1 | 1 |
| | 15 | •302FZ28160 | 2FZ28160 | FRAME EXIT LOWER | 1 | 1 | 1 | 1 |
| ⊙ | 16 | •302FZ28171 | 2FZ28171 | GU DE CHANGE R | 1 | 1 | 1 | 1 |
| ⊙ | 17 | •302FZ28180 | 2FZ28180 | ACTUATOR EXIT L | 1 | 1 | 1 | 1 |
| | 18 | •302FZ28200 | 2FZ28200 | SPRING ACTUATOR L | 1 | 1 | 1 | 1 |
| | 19 | •302FZ28210 | 2FZ28210 | SPRING ACTUATOR R | 1 | 1 | 1 | 1 |
| | 20 | •302FZ28220 | 2FZ28220 | SPRING L NK | 1 | 1 | 1 | 1 |
| ⊙ | 21 | •302FZ28240 | 2FZ28240 | ACTUATOR EXIT R | 1 | 1 | 1 | 1 |
| | 22 | •302FZ28250 | 2FZ28250 | EARTH PLATE F/D | 1 | 1 | 1 | 1 |
| | 23 | •302FZ28260 | 2FZ28260 | EXIT PUSH | 3 | 3 | 3 | 3 |
| | 24 | •302FZ28270 | 2FZ28270 | SPRING EXIT PUSH | 3 | 3 | 3 | 3 |
| ⊙ | 25 | •302FZ28280 | 2FZ28280 | SHEET SILENCER EXIT | 1 | 1 | 1 | 1 |
| ⊙ | 26 | •302FZ28410 | 2FZ28410 | ACTUATOR EXIT SENSOR | 1 | 1 | 1 | 1 |
| | 27 | •302FZ46470 | 2FZ46470 | WIRE EXIT JAM SENSOR | 1 | 1 | 1 | 1 |
| ⊙ | 28 | •302FZ94610 | 2FZ94610 | PARTS,ROLLER EXIT SP | 1 | 1 | 1 | 1 |
| ⊙ | 29 | •34821210 | | STATIC ELIMINATOR B,EJECT | 1 | 1 | 1 | 1 |
| | 30 | •3CY07080 | | BUSH NG 6 | 2 | 2 | 2 | 2 |
| | 31 | •5MVX111DN003 | 2A806250 | R NG STOPPER /A-49 FEED A4 | 1 | 1 | 1 | 1 |

| | Ref. No. | Part.No. | Alternative. | Description | Quantity 110 | 120 | 230 | 240 |
|---|---|---|---|---|---|---|---|---|
| | 101 | 5MBTPB4010PW++R | B1A64100 | B ND T.T SCREW(+) / M4 X 10 CRFREE P-T | | | | |

- Parts with "•" are component parts or sub-assemblies of the assembly appearing immediately above them.
- Parts with "⊙" indicate regular maintenance parts.

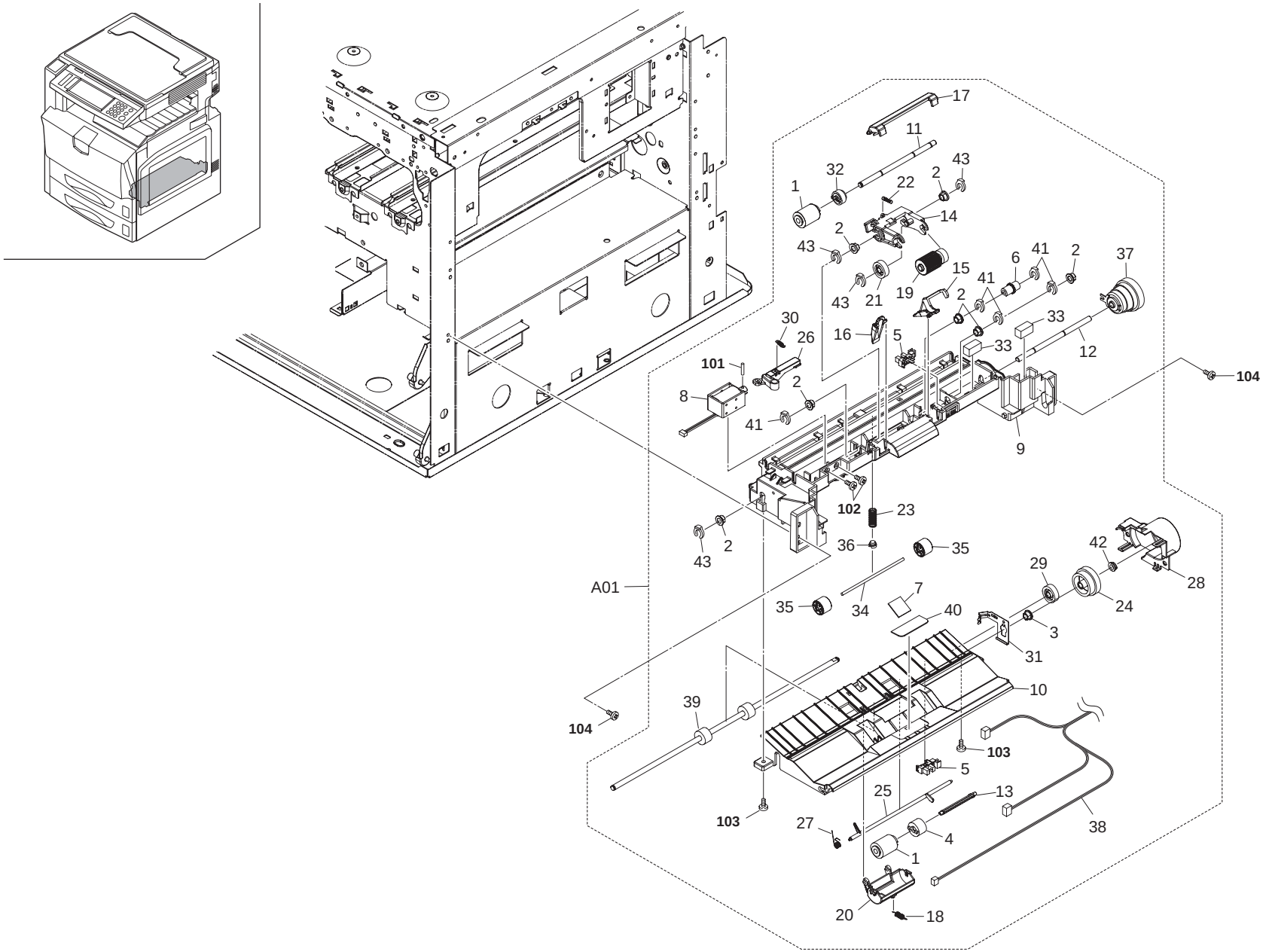
17
11
32
1
22
2
43
14
2
43
6
41
2
37
43
21
19
15
41
2
30
26
16
5
33
12
101
2
8
41
9
104
102
23
43
2
36
35
A01
42
29
28
24
35
34
7
40
3
31
10
104
39
103
5
25
13
103
27
4
38
1
20
18

FIG. 20 MPT Assy

| | Ref. No. | Part.No. | Alternative. | Description | Quantity 110 | 120 | 230 | 240 |
|---|---|---|---|---|---|---|---|---|
| ⊙ | A01 | 302FZ93220 | 2FZ93220 | PARTS MPT ASS'Y | 1 | 1 | 1 | 1 |
| ⊙ | 1 | •2AR07230 | | PULLEY,SEPARATION | 2 | 2 | 2 | 2 |
| | 2 | •2BG22960 | | BUSH 6 | 7 | 7 | 7 | 7 |
| | 3 | •2BG22970 | | BUSH 6 EW | 1 | 1 | 1 | 1 |
| ⊙ | 4 | •2C907280 | | TORQUE LIMITER 340 | 1 | 1 | 1 | 1 |
| ⊙ | 5 | •2C927210 | | SENSOR 248NL1 | 2 | 2 | 2 | 2 |
| | 6 | •302FB06151 | 2FB06151 | JOINT DRIVE | 1 | 1 | 1 | 1 |
| ⊙ | 7 | •302FB17760 | 2FB17760 | PAD MP | 1 | 1 | 1 | 1 |
| ⊙ | 8 | •302FB25180 | 2FB25180 | SOLENOID LEADING FEED | 1 | 1 | 1 | 1 |
| | 9 | •302FZ08011 | 2FZ08011 | BASE MPT | 1 | 1 | 1 | 1 |
| | 10 | •302FZ08020 | 2FZ08020 | LOWER GUIDE MPT | 1 | 1 | 1 | 1 |
| | 11 | •302FZ08030 | 2FZ08030 | SHAFT FEED MPT | 1 | 1 | 1 | 1 |
| | 12 | •302FZ08040 | 2FZ08040 | SHAFT FEED JOINT MPT | 1 | 1 | 1 | 1 |
| | 13 | •302FZ08050 | 2FZ08050 | SHAFT SEPARATE MPT | 1 | 1 | 1 | 1 |
| | 14 | •302FZ08070 | 2FZ08070 | HOLDER MPT LF | 1 | 1 | 1 | 1 |
| | 15 | •302FZ08090 | 2FZ08090 | PAPER STOPPER MPT F | 1 | 1 | 1 | 1 |
| | 16 | •302FZ08100 | 2FZ08100 | PAPER STOPPER MPT R | 1 | 1 | 1 | 1 |
| | 17 | •302FZ08110 | 2FZ08110 | LEVER STOPPER RELEASE | 1 | 1 | 1 | 1 |
| | 18 | •302FZ08120 | 2FZ08120 | SPRING SEPARATE PULLEY | 1 | 1 | 1 | 1 |
| ⊙ | 19 | •302FZ08130 | 2FZ08130 | PULLEY LEADING FEED MPT | 1 | 1 | 1 | 1 |
| | 20 | •302FZ08160 | 2FZ08160 | HOLDER SEPARATE MPT | 1 | 1 | 1 | 1 |
| ⊙ | 21 | •302FZ08180 | 2FZ08180 | GEAR MPT Z23 | 1 | 1 | 1 | 1 |
| | 22 | •302FZ08190 | 2FZ08190 | SPRING HOLDER MPT | 1 | 1 | 1 | 1 |
| | 23 | •302FZ08291 | 2FZ08291 | SPRING MID MPT | 1 | 1 | 1 | 1 |
| ⊙ | 24 | •302FZ08300 | 2FZ08300 | GEAR MPT Z41Z35 | 1 | 1 | 1 | 1 |
| ⊙ | 25 | •302FZ08310 | 2FZ08310 | ACTUATOR MIDDLE MPT | 1 | 1 | 1 | 1 |
| | 26 | •302FZ08320 | 2FZ08320 | LEVER MPT SOLENO D | 1 | 1 | 1 | 1 |
| | 27 | •302FZ08350 | 2FZ08350 | SPRING ACTUATOR MPT | 1 | 1 | 1 | 1 |
| | 28 | •302FZ08360 | 2FZ08360 | COVER MPT DRIVE | 1 | 1 | 1 | 1 |
| ⊙ | 29 | •302FZ08370 | 2FZ08370 | GEAR JOINT MPT UNIT | 1 | 1 | 1 | 1 |
| | 30 | •302FZ08430 | 2FZ08430 | SPRING SOLENOID MPT | 1 | 1 | 1 | 1 |
| | 31 | •302FZ08440 | 2FZ08440 | PLATE EARTH MPT ROLL | 1 | 1 | 1 | 1 |
| ⊙ | 32 | •302FZ08450 | 2FZ08450 | GEAR MPT FEED Z19 ASSY | 1 | 1 | 1 | 1 |
| | 33 | •302FZ08460 | 2FZ08460 | PAD WIRE | 2 | 2 | 2 | 2 |
| | 34 | •302FZ22140 | 2FZ22140 | SHAFT M DDLE L | 1 | 1 | 1 | 1 |
| ⊙ | 35 | •302FZ22150 | 2FZ22150 | PULLEY MIDDLE | 2 | 2 | 2 | 2 |
| | 36 | •302FZ24600 | 2FZ24600 | BUSH SP | 1 | 1 | 1 | 1 |
| ⊙ | 37 | •302FZ31830 | 2FZ31830 | CLUTCH MPF 6 | 1 | 1 | 1 | 1 |
| | 38 | •302FZ46520 | 2FZ46520 | WIRE MPF UNIT | 1 | 1 | 1 | 1 |
| ⊙ | 39 | •302FZ94490 | 2FZ94490 | PARTS,ROLLER MID MPT SP | 1 | 1 | 1 | 1 |
| ⊙ | 40 | •33906400 | | FRICTION PLATE,BYPASS | 1 | 1 | 1 | 1 |
| | 41 | •5MVL177DN001 | 2FB06810 | R NG STOPPER 4 | 5 | 5 | 5 | 5 |
| | 42 | •5MVM176XN001 | 2BM14330 | BUSH D1234 | 1 | 1 | 1 | 1 |
| | 43 | •5MVX111DN003 | 2A806250 | R NG STOPPER /A-49 FEED A4 | 4 | 4 | 4 | 4 |

| | Ref. No. | Part.No. | Alternative. | Description | Quantity 110 | 120 | 230 | 240 |
|---|---|---|---|---|---|---|---|---|
| | 101 | E0030140 | | SPRING PIN 3X14 | | | | |
| | 102 | 5MBSPB3006NW++R | B1B03060 | B ND HEAD SCREW(+) / M3 X 6 CRFREE | | | | |
| | 103 | 5MBTPB4010PW++R | B1A64100 | B ND T.T SCREW(+) / M4 X 10 CRFREE P-T | | | | |
| | 104 | B1A54080 | | +BIND TAP-TITE S SCREW M4X08 | | | | |

- Parts with "•" are component parts or sub-assemblies of the assembly appearing immediately above them.
- Parts with "⊙" indicate regular maintenance parts.

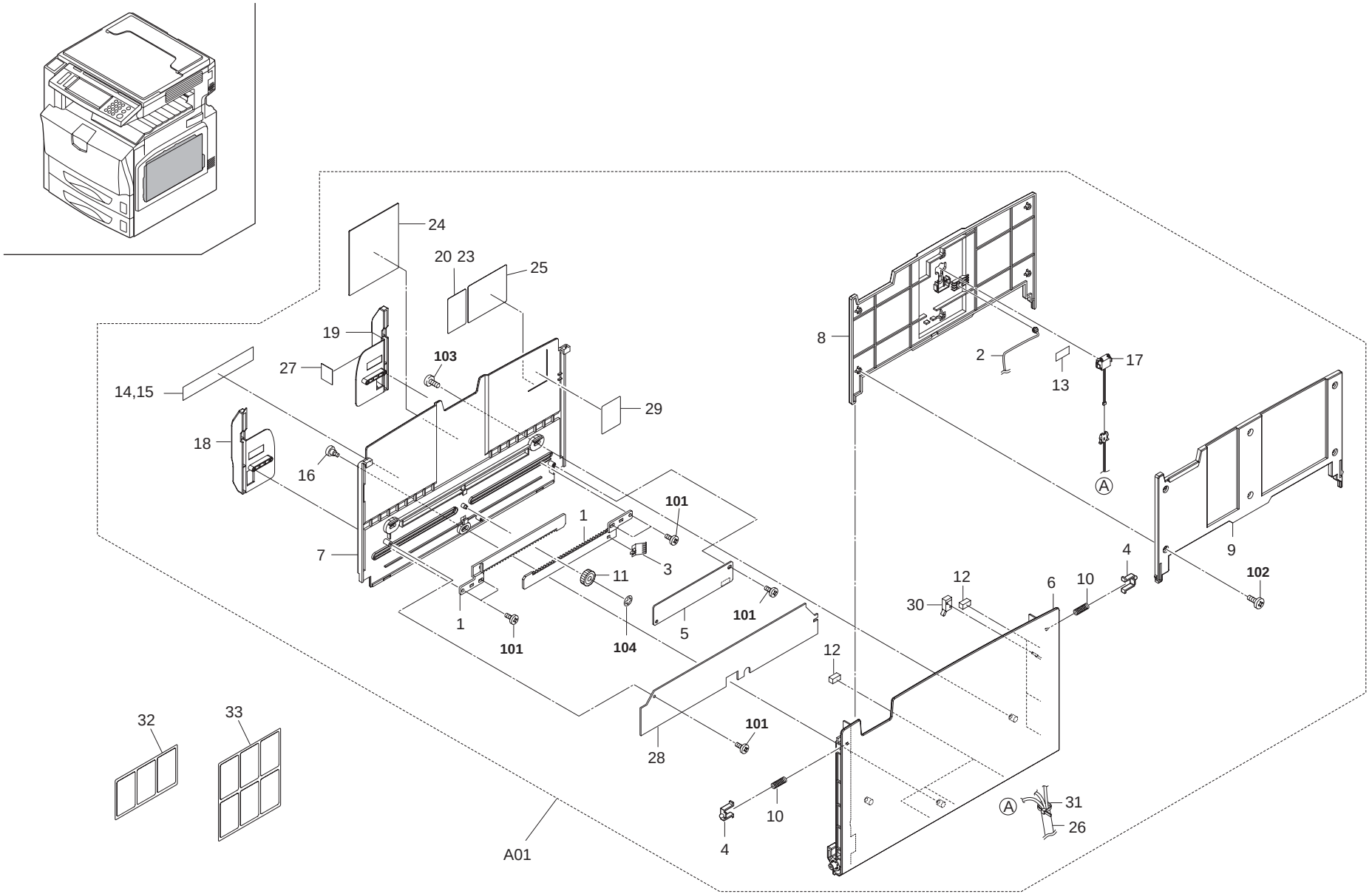
24
20 23
25
19
27
103
14,15
29
18
16
101
1
7
3
11
1
101
104
5
101
8
2
17
13
A
9
4
102
12
6
10
30
12
101
28
10
4
A
31
26
32
33
A01

FIG. 21 Table Bypass

| | Ref. No. | Part.No. | Alternative. | Description | Quantity 110 | 120 | 230 | 240 |
|---|---|---|---|---|---|---|---|---|
| ⊙ | A01 | 302FZ93363 | 2FZ93363 | PARTS TRAY ASSY | 1 | 1 | 1 | 1 |
| ⊙ | 1 | •2BC06750 | | RACK,CURSOR | 2 | 2 | 2 | 2 |
| | 2 | •2BC07340 | | LEFT WIRE B,LIFT | 1 | 1 | 1 | 1 |
| ⊙ | 3 | •2BC07860 | | TERMINAL,PAPER SIZE DETECTION | 1 | 1 | 1 | 1 |
| | 4 | •2FB07330 | | STOPPER BYPASS TABLE | 2 | 2 | 2 | 2 |
| ⊙ | 5 | •2FG01020 | | SIZE DETECTION ASS'Y | 1 | 1 | 1 | 1 |
| | 6 | •302BC43134 | 2BC43134 | TABLE A,BYPASS(G E) | 1 | 1 | 1 | 1 |
| | 7 | •302BC43146 | 2BC43146 | TABLE B,BYPASS(G E) | 1 | 1 | 1 | 1 |
| | 8 | •302BC43152 | 2BC43152 | TABLE C,BYPASS(G E) | 1 | 1 | 1 | 1 |
| | 9 | •302BC43161 | 2BC43161 | TABLE D,BYPASS(G E) | 1 | 1 | 1 | 1 |
| | 10 | •302FB17700 | 2FB17700 | SPRING BYPASS TEBLE | 2 | 2 | 2 | 2 |
| ⊙ | 11 | •302FB17710 | 2FB17710 | GEAR 18 IDLE DEVELOPING | 1 | 1 | 1 | 1 |
| | 12 | •302FB17720 | 2FB17720 | SPONGE BYPASS TABLE | 6 | 6 | 6 | 6 |
| | 13 | •302FB17730 | 2FB17730 | SEAL BYPASS TABLE | 1 | 1 | 1 | 1 |
| ⊙ | 14 | •302FB17740 | 2FB17740 | SIZE INDICATOR BYPASS(M) | 1 | 1 | 1 | 1 |
| ⊙ | 15 | •302FB17750 | 2FB17750 | SIZE INDICATOR BYPASS(I) | 1 | 1 | 1 | 1 |
| | 16 | •302FB17800 | 2FB17800 | PIN BYPASS TABLE | 1 | 1 | 1 | 1 |
| ⊙ | 17 | •302FB25140 | 2FB25140 | SWITCH BYPASS SIZE | 1 | 1 | 1 | 1 |
| ⊙ | 18 | •302FZ08330 | 2FZ08330 | CURSOR MPT F | 1 | 1 | 1 | 1 |
| ⊙ | 19 | •302FZ08340 | 2FZ08340 | CURSOR MPT R | 1 | 1 | 1 | 1 |
| | 20 | •302FZ08480 | 2FZ08480 | LABEL MP CAUTION J V | 1 | 1 | 1 | 1 |
| | 21 | •302FZ08490 | 2FZ08490 | LABEL MP CAUTION E V | 1 | 1 | 1 | 1 |
| | 22 | •302FZ08530 | 2FZ08530 | LABEL MP CAUTION TW V | 1 | 1 | 1 | 1 |
| | 23 | •302FZ08540 | 2FZ08540 | LABEL MP CAUTION KS V | 1 | 1 | 1 | 1 |
| ⊙ | 24 | •302FZ08500 | 2FZ08500 | PAD MP L | 1 | 1 | 1 | 1 |
| | 25 | •302FZ08560 | 2FZ08560 | LABEL MP CAUTION PIC V | 1 | 1 | 1 | 1 |
| | 26 | •302FZ46840 | 2FZ46840 | WIRE BYPASS TRAY | 1 | 1 | 1 | 1 |
| ⊙ | 27 | •303H605010 | 3H605010 | LABEL ORIG NAL MAX | 1 | 1 | 1 | 1 |
| | 28 | •33906900 | | COVER,CURSOR | 1 | 1 | 1 | 1 |
| | 29 | •3C007060 | | PAD,LIFT | 1 | 1 | 1 | 1 |
| ⊙ | 30 | •76727010 | | ORIGINAL SIZE SWITCH | 1 | 1 | 1 | 1 |
| | 31 | •M2307010 | | BINDING BAND,T18R | 1 | 1 | 1 | 1 |
| | 32 | 302FZ08510 | 2FZ08510 | LABEL MP CAUTION 3 V | | 1 | | |
| | 33 | 302FZ08520 | 2FZ08520 | LABEL MP CAUTION 6 V | | | 1 | 1 |

| | Ref. No. | Part.No. | Alternative. | Description | Quantity 110 | 120 | 230 | 240 |
|---|---|---|---|---|---|---|---|---|
| | 101 | BAA63080 | | +TP TAP-TITE P SCREW M3X08 | | | | |
| | 102 | BAB63060 | | +TP TAP-TITE P SCREW M3X06 | | | | |
| | 103 | BAB64080 | | +TP TAP-TITE P SCREW M4X8 | | | | |
| | 104 | 5MBCS4025XSP | D4000400 | CS STOP RING / X 4 X 25T S-BLK | | | | |

- Parts with "•" are component parts or sub-assemblies of the assembly appearing immediately above them.
- Parts with "⊙" indicate regular maintenance parts.

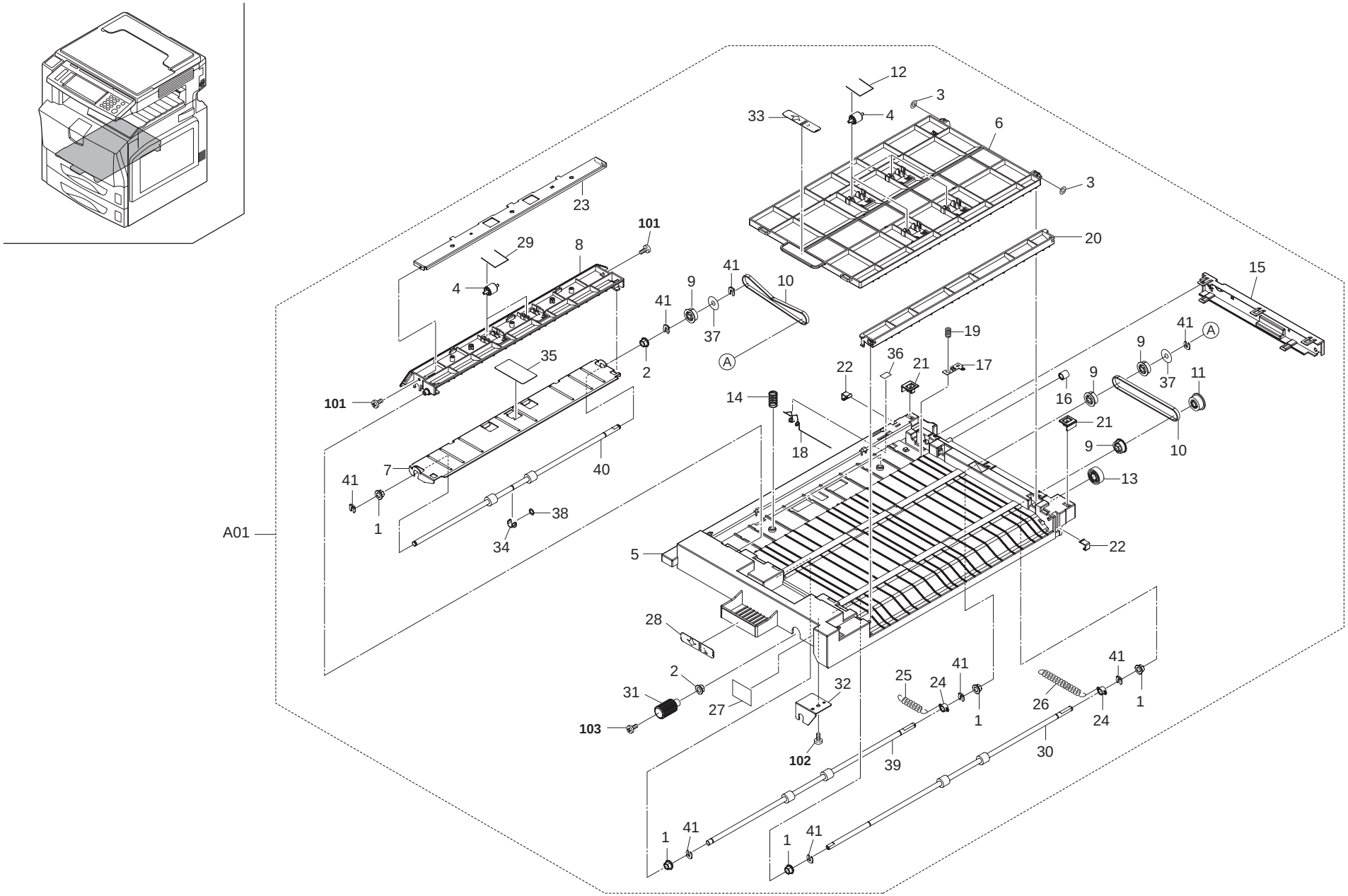
12
3
33
4
6
3
23
101
29
8
20
15
4
41
9
10
41
37
19
41
A
9
35
2
A
36
21
17
22
9
37
11
101
14
16
21
18
9
10
7
40
13
41
38
1
A01
34
5
22
28
2
41
25
24
41
31
32
26
1
27
1
24
103
102
39
30
1
41
1
41

FIG. 22 MPT Bypass Assy

| | Ref. No. | Part.No. | Alternative. | Description | Quantity 110 | 120 | 230 | 240 |
|---|---|---|---|---|---|---|---|---|
| ⊙ | A01 | 302FZ93212 | 2FZ93212 | PARTS MPT BYPASS ASS'Y | 1 | 1 | 1 | 1 |
| | 1 | •2BG22960 | | BUSH 6 | 5 | 5 | 5 | 5 |
| | 2 | •2BG22970 | | BUSH 6 EW | 2 | 2 | 2 | 2 |
| | 3 | •2BG22990 | | CUT WASHER 4 | 2 | 2 | 2 | 2 |
| ⊙ | 4 | •302FZ07020 | 2FZ07020 | PULLEY MPT BYPASS | 6 | 6 | 6 | 6 |
| | 5 | •302FZ07042 | 2FZ07042 | BASE MPT BYPASS | 1 | 1 | 1 | 1 |
| | 6 | •302FZ07051 | 2FZ07051 | COVER MPT BYPASS | 1 | 1 | 1 | 1 |
| | 7 | •302FZ07061 | 2FZ07061 | GU DE BYPASS RIGHT | 1 | 1 | 1 | 1 |
| | 8 | •302FZ07070 | 2FZ07070 | COVER BYPASS OUT | 1 | 1 | 1 | 1 |
| ⊙ | 9 | •302FZ07080 | 2FZ07080 | PULLEY BYPASS | 4 | 4 | 4 | 4 |
| ⊙ | 10 | •302FZ07090 | 2FZ07090 | BELT BYPASS | 2 | 2 | 2 | 2 |
| ⊙ | 11 | •302FZ07100 | 2FZ07100 | GEAR BYPASS A | 1 | 1 | 1 | 1 |
| | 12 | •302FZ07110 | 2FZ07110 | SPRING BYPASS PULLEY | 4 | 4 | 4 | 4 |
| ⊙ | 13 | •302FZ07120 | 2FZ07120 | GEAR BYPASS JOINT | 1 | 1 | 1 | 1 |
| | 14 | •302FZ07130 | 2FZ07130 | SPRING BYPASS MOTION | 2 | 2 | 2 | 2 |
| | 15 | •302FZ07140 | 2FZ07140 | COVER MPT REAR | 1 | 1 | 1 | 1 |
| ⊙ | 16 | •302FZ07150 | 2FZ07150 | PULLEY TENSION BELT | 1 | 1 | 1 | 1 |
| | 17 | •302FZ07180 | 2FZ07180 | PLATE EARTH MPT | 1 | 1 | 1 | 1 |
| | 18 | •302FZ07190 | 2FZ07190 | SPRING EARTH BYPASS | 1 | 1 | 1 | 1 |
| | 19 | •302FZ07210 | 2FZ07210 | SPRING EARTH BYPASS JOINT | 1 | 1 | 1 | 1 |
| | 20 | •302FZ07231 | 2FZ07231 | GU DE BYPASS IN | 1 | 1 | 1 | 1 |
| | 21 | •302FZ07240 | 2FZ07240 | SLIDER BYPASS A | 2 | 2 | 2 | 2 |
| | 22 | •302FZ07250 | 2FZ07250 | SLIDER BYPASS B | 2 | 2 | 2 | 2 |
| | 23 | •302FZ07301 | 2FZ07301 | PLATE GUIDE MPT | 1 | 1 | 1 | 1 |
| | 24 | •302FZ07310 | 2FZ07310 | BUSH CONTACT MPT B | 2 | 2 | 2 | 2 |
| | 25 | •302FZ07320 | 2FZ07320 | SPRING EARTH MPT A | 1 | 1 | 1 | 1 |
| | 26 | •302FZ07330 | 2FZ07330 | SPRING EARTH MPT B | 1 | 1 | 1 | 1 |
| | 27 | •302FZ07350 | 2FZ07350 | LABEL JAM BYPASS B2 | 1 | 1 | 1 | 1 |
| | 28 | •302FZ07360 | 2FZ07360 | LABEL JAM BYPASS B3 | 1 | 1 | 1 | 1 |
| | 29 | •302FZ07380 | 2FZ07380 | SPRING BYPASS PULLEY B | 2 | 2 | 2 | 2 |
| ⊙ | 30 | •302FZ07390 | 2FZ07390 | ROLLER BYPASS C | 1 | 1 | 1 | 1 |
| | 31 | •302FZ07400 | 2FZ07400 | LEVER JAM BYPASS | 1 | 1 | 1 | 1 |
| | 32 | •302FZ07410 | 2FZ07410 | MOUNT LEVER BYPASS | 1 | 1 | 1 | 1 |
| | 33 | •302FZ07420 | 2FZ07420 | LABEL JAM BYPASS B4 | 1 | 1 | 1 | 1 |
| | 34 | •302FZ07540 | 2FZ07540 | HOLDER SHAFT OUT | 1 | 1 | 1 | 1 |
| | 35 | •302FZ07550 | 2FZ07550 | SHEET BYPASS OUT | 1 | 1 | 1 | 1 |
| | 36 | •302FZ22760 | 2FZ22760 | STOPPER EARTH MIDDLE | 1 | 1 | 1 | 1 |
| | 37 | •302FZ29140 | 2FZ29140 | COLLAR DU PULLEY | 2 | 2 | 2 | 2 |
| | 38 | •5MVS665KB001 | 2BM40060 | CUT WASHER | 1 | 1 | 1 | 1 |
| ⊙ | 39 | •302FZ94470 | 2FZ94470 | PARTS,ROLLER BYPASS A SP | 1 | 1 | 1 | 1 |
| ⊙ | 40 | •302FZ94481 | 2FZ94481 | PARTS,ROLLER BYPASS B SP | 1 | 1 | 1 | 1 |
| | 41 | •5MVX111DN003 | 2A806250 | R NG STOPPER /A-49 FEED A4 | 8 | 8 | 8 | 8 |

| Ref. No. | Part.No. | Alternative. | Description | Quantity 110 | 120 | 230 | 240 |
|---|---|---|---|---|---|---|---|
| 101 | 5MBTPB3006TW++R | B1A53060 | B ND T.T SCREW(+) / M3 X 6 CRFREE S-T | | | | |
| 102 | 5MBTPB3008PW++R | B1A63080 | B ND T.T SCREW(+) / M3 X 8 CRFREE P-T | | | | |
| 103 | B4B03050 | | +TP-A SCREW M3X05(TRIVALENT CHROM | | | | |

- Parts with "•" are component parts or sub-assemblies of the assembly appearing immediately above them.
- Parts with "⊙" indicate regular maintenance parts.

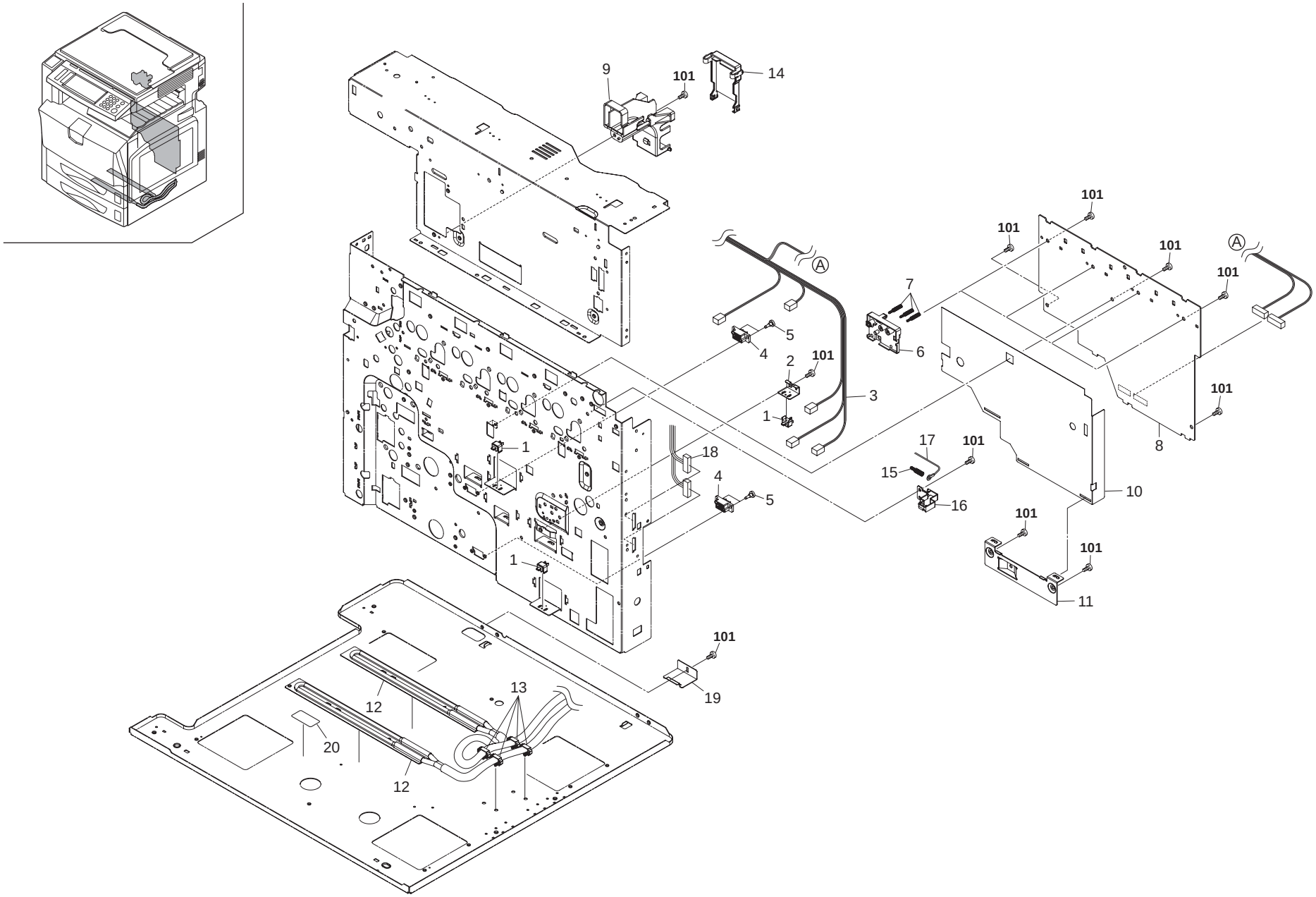
9
101
14
101
101
101
101
A
A
7
5
4
6
2
101
3
1
101
8
1
18
17
101
15
4
5
16
10
101
101
1
11
101
19
13
12
20
12

## FIG. 23 Electrical Components I

| | Ref. No. | Part.No. | Alternative. | Description | Quantity 110 | 120 | 230 | 240 |
|---|---|---|---|---|---|---|---|---|
| ⊙ | 1 | 66127010 | | SWITCH,COVER OPEN | 3 | 3 | 3 | 3 |
| | 2 | 302FZ02610 | 2FZ02610 | MOUNT CASSETTE SW | 1 | 1 | 1 | 1 |
| | 3 | 302HP46050 | 2HP46050 | WIRE FEED JOINT (25/25ppm) (32/25ppm) (32/32ppm) | 1 | 1 | 1 | 1 |
| | 3 | 302JD46010 | 2JD46010 | WIRE FEED JOINT (40/35ppm) | | 1 | 1 | 1 |
| | 4 | 7YCC08B2046+H02 | YC026130 | CONNECTOR | 2 | 2 | 2 | 2 |
| | 5 | 302FZ03070 | 2FZ03070 | RETAIN NG PIN DRAWER | 4 | 4 | 4 | 4 |
| | 6 | 302FZ39110 | 2FZ39110 | MOUNT HV TERMINAL | 4 | 4 | 4 | 4 |
| ⊙ | 7 | 302FZ39520 | 2FZ39520 | SPRING HV MAIN | 12 | 12 | 12 | 12 |
| ⊙ | 8 | 302JG45010 | 2JG45010 | HVU MA N (25/25ppm) (32/25ppm) (32/32ppm) | 1 | 1 | 1 | 1 |
| ⊙ | 8 | 302JD94120 | 2JD94120 | PARTS,PWB HVU MAIN ASSY SP (40/35ppm) | | 1 | 1 | 1 |
| | 9 | 302FZ39210 | 2FZ39210 | GU DE WIRE MAIN | 1 | 1 | 1 | 1 |
| | 10 | 302FZ39900 | 2FZ39900 | SHEET PWB | 1 | 1 | 1 | 1 |
| | 11 | 302FZ39920 | 2FZ39920 | MOUNT HV LOWER | 1 | 1 | 1 | 1 |
| ⊙ | 12 | 302FZ45170 | 2FZ45170 | HEATER DEHUMIDIFIER 120 | 2 | 2 | | |
| ⊙ | 12 | 302FZ45160 | 2FZ45160 | HEATER DEHUMIDIFIER 240 | | | 2 | 2 |
| | 13 | 7YZM610001++H01 | YZ010230 | ACCESS SADDLE | 4 | 4 | 4 | 4 |
| | 14 | 302FZ39220 | 2FZ39220 | GU DE WIRE SUB | 1 | 1 | 1 | 1 |
| | 15 | 302FZ39530 | 2FZ39530 | SPRING ICL | 1 | 1 | 1 | 1 |
| | 16 | 302FZ39580 | 2FZ39580 | TERMINAL ICL | 1 | 1 | 1 | 1 |
| | 17 | 302FZ46270 | 2FZ46270 | WIRE CLEANING | 1 | 1 | 1 | 1 |
| | 18 | 302FZ46031 | 2FZ46031 | WIRE MPF | 1 | 1 | 1 | 1 |
| | 19 | 302GR39190 | 2GR39190 | COVER CONN | 1 | 1 | 1 | 1 |
| | 20 | 20305130 | | LABEL L,HIGH TEMPERATURE CAUTION | 1 | 1 | 1 | 1 |

| | Ref. No. | Part.No. | Alternative. | Description | Quantity 110 | 120 | 230 | 240 |
|---|---|---|---|---|---|---|---|---|
| | 101 | B1A54080 | | +BIND TAP-TITE S SCREW M4X08 | | | | |

- Parts with "•" are component parts or sub-assemblies of the assembly appearing immediately above them.
- Parts with "⊙" indicate regular maintenance parts.

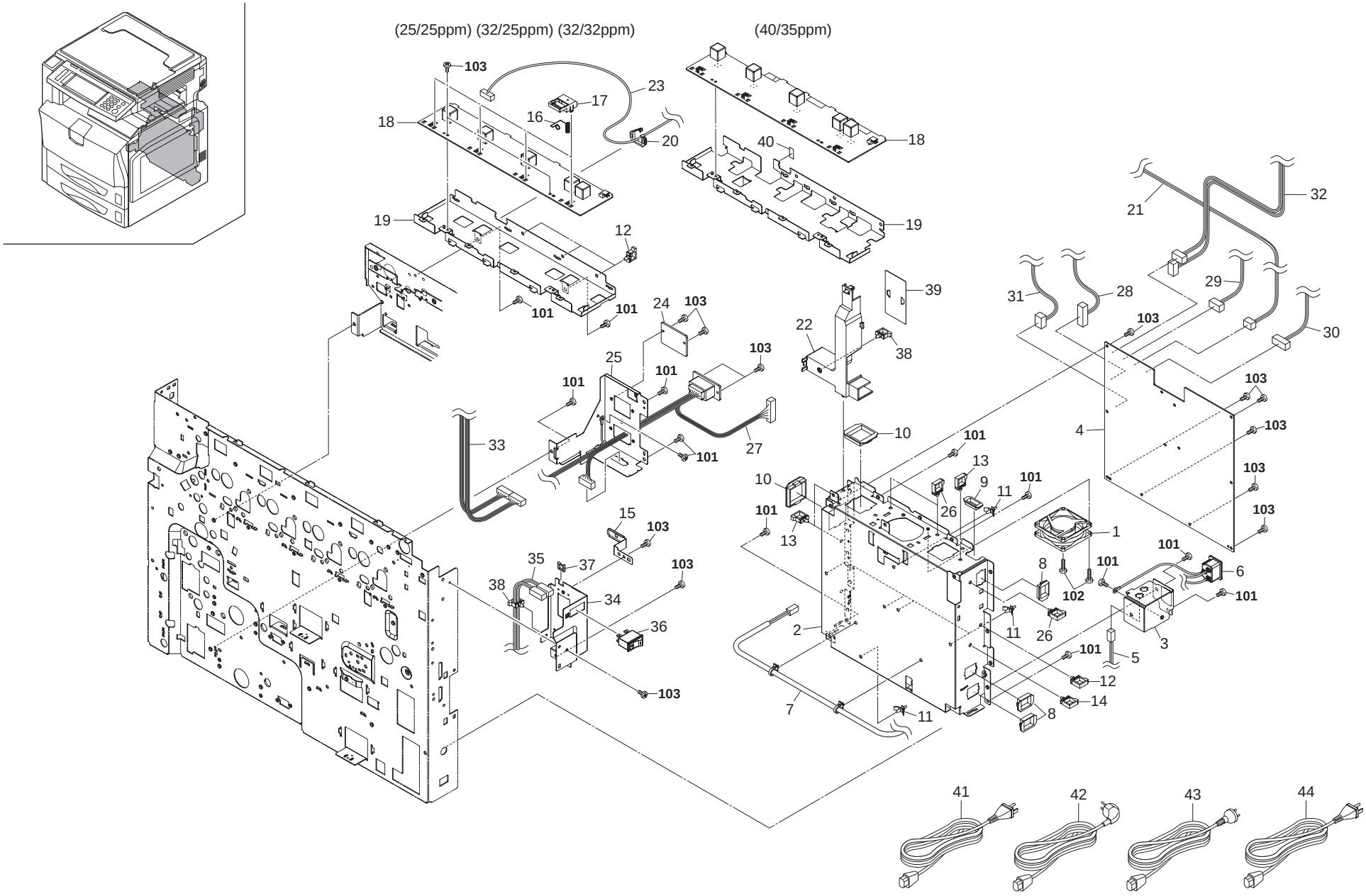
(25/25ppm) (32/25ppm) (32/32ppm)
(40/35ppm)
103
23
17
16
18
20
40
18
19
12
19
21
32
39
31
28
29
30
101
101
24
103
22
38
103
25
101
101
103
33
27
101
10
101
13
9
11
101
4
103
103
103
103
10
101
13
26
1
15
103
35
37
103
38
34
36
103
8
101
102
101
6
101
2
11
26
3
101
5
12
14
7
11
8
41
42
43
44

| | Ref. No. | Part.No. | Alternative. | Description | Quantity 110 | 120 | 230 | 240 |
|---|---|---|---|---|---|---|---|---|
| ⊙ | 1 | 2FB27190 | | FAN 60 COOL NG | 1 | 1 | 1 | 1 |
| | 2 | 302FZ39051 | 2FZ39051 | SHIELD BOX | 1 | 1 | 1 | 1 |
| | 3 | 302FZ39550 | 2FZ39550 | BRACKET NLET | 1 | 1 | 1 | 1 |
| ⊙ | 4 | 302FZ45010 | 2FZ45010 | LVU 100 | 1 | 1 | | |
| ⊙ | 4 | 302FZ45020 | 2FZ45020 | LVU 200 | | | 1 | 1 |
| | 5 | 302FZ46430 | 2FZ46430 | WIRE CASSETTE HEATER | 1 | 1 | 1 | 1 |
| | 6 | 302FZ46661 | 2FZ46661 | WIRE INLET ASS'Y | 1 | 1 | 1 | 1 |
| | 7 | 302FZ46730 | 2FZ46730 | WIRE OP HEATER | 1 | 1 | 1 | 1 |
| | 8 | 7YZM210002++H01 | YZ004730 | ACCESS.EDGING | 3 | 3 | 3 | 3 |
| | 9 | 7YZM210003++H01 | YZ037970 | ACCESS.EDGING | 1 | 1 | 1 | 1 |
| | 10 | 7YZM210004++H01 | YZ037980 | ACCESS.EDGING | 2 | 2 | 2 | 2 |
| | 11 | 7YZM510007++H01 | YZ042780 | ACCESS.SPACER | 6 | 6 | 6 | 6 |
| | 12 | 7YZM610001++H01 | YZ010230 | ACCESS SADDLE | 4 | 4 | 4 | 4 |
| | 13 | 7YZM610003++H01 | YZ010250 | ACCESS SADDLE | 3 | 3 | 3 | 3 |
| | 14 | 7YZM610004++H01 | YZ012210 | ACCESS SADDLE | 1 | 1 | 1 | 1 |
| | 15 | 302FZ39930 | 2FZ39930 | PLATE EARTH IPU | 1 | 1 | 1 | 1 |
| ⊙ | 16 | 302FZ39540 | 2FZ39540 | SPRING HV TC1 | 4 | 4 | 4 | 4 |
| | 17 | 302FZ39570 | 2FZ39570 | TERMINAL TC1 | 4 | 4 | 4 | 4 |
| ⊙ | 18 | 302FZ45041 | 2FZ45041 | HVU TRANSFER 1 (25/25ppm) (32/25ppm) (32/32ppm) | 1 | 1 | 1 | 1 |
| ⊙ | 18 | 302JD94100 | 2JD94100 | PARTS,PWB HVU TRANSFER 1 ASSY SP (40/35ppm) | | 1 | 1 | 1 |
| | 19 | 302FZ39590 | 2FZ39590 | MOUNT TRANSFER HV (25/25ppm) (32/25ppm) (32/32ppm) | 1 | 1 | 1 | 1 |
| | 19 | 302JD39010 | 2JD39010 | MOUNT TRANSFER HV (40/35ppm) | | 1 | 1 | 1 |
| | 20 | 7YZM210003++H01 | YZ037970 | ACCESS.EDGING | 1 | 1 | 1 | 1 |
| | 21 | 302FZ46641 | 2FZ46641 | WIRE FAX POWER | 1 | 1 | 1 | 1 |
| | 22 | 302FZ39870 | 2FZ39870 | GU DE WIRE LOWER | 1 | 1 | 1 | 1 |
| | 23 | 302FZ46120 | 2FZ46120 | WIRE HVU 2 (25/25ppm) (32/25ppm) (32/32ppm) | 1 | 1 | 1 | 1 |
| | 23 | 302JD46020 | 2JD46020 | WIRE HVU 2 (40/35ppm) | | 1 | 1 | 1 |
| | 24 | 302FB26290 | 2FB26290 | L D VENDOR | 1 | 1 | 1 | 1 |
| | 25 | 302FZ39071 | 2FZ39071 | MOUNT OPTION F | 1 | 1 | 1 | 1 |
| | 26 | 7YZM610015++H01 | YZ046900 | ACCESS.SADDLE | 3 | 3 | 3 | 3 |
| | 27 | 302FZ46742 | 2FZ46742 | WIRE OP DESK | 1 | 1 | 1 | 1 |
| | 28 | 302FZ46220 | 2FZ46220 | WIRE LVU ENGINE | 1 | 1 | 1 | 1 |
| | 29 | 302FZ46240 | 2FZ46240 | WIRE LVU CONTROLLER | 1 | 1 | 1 | 1 |
| | 30 | 302FZ46170 | 2FZ46170 | WIRE FUSER (25/25ppm) (32/25ppm) (32/32ppm) | 1 | 1 | 1 | 1 |
| | 30 | 302JD46100 | 2JD46100 | WIRE FUSER (40/35ppm) | | 1 | 1 | 1 |
| | 31 | 302FZ46210 | 2FZ46210 | WIRE INTERLOCK SWITCH | 1 | 1 | 1 | 1 |
| | 32 | 302FZ46231 | 2FZ46231 | WIRE LVU IPU | 1 | 1 | 1 | 1 |
| | 33 | 302FZ46392 | 2FZ46392 | WIRE OPTION SIGNAL | 1 | 1 | 1 | 1 |
| | 34 | 302FZ39731 | 2FZ39731 | PLATE MAIN SW | 1 | 1 | 1 | 1 |
| | 35 | 302FZ46260 | 2FZ46260 | WIRE MSW | 1 | 1 | 1 | 1 |
| ⊙ | 36 | 7SC010101+++H01 | SC023350 | SW.SEESAW | 1 | 1 | 1 | 1 |
| | 37 | 7YZM210006++H01 | YZ038000 | ACCESS.EDGING | 1 | 1 | 1 | 1 |
| | 38 | 7YZM610003++H01 | YZ010250 | ACCESS SADDLE | 2 | 2 | 2 | 2 |
| | 39 | 302FZ39880 | 2FZ39880 | SHEET WIRE LOWER | 1 | 1 | 1 | 1 |
| | 40 | 302JD39020 | 2JD39020 | SHEET TRANSFER HV (40/35ppm) | | 1 | 1 | 1 |

| | Ref. No. | Part.No. | Alternative. | Description | Quantity 110 | 120 | 230 | 240 |
|---|---|---|---|---|---|---|---|---|
| | 41 | 3019527401 | 19527401 | POWER CORD(120) | | 1 | | |
| | 42 | 2AR27800 | | POWER CORD(230) | | | 1 | |
| | 43 | 3029927232 | 29927232 | POWER CODE AS(240) | | | | 1 |
| | 44 | 3065027601 | 65027601 | POWER CORD 110 | 1 | | | |
| | 101 | B1A54080 | | +BIND TAP-TITE S SCREW M4X08 | | | | |
| | 102 | 7BB100330H | B1B53300 | +BIND TAP-TITE S SCREW M3X30 CRFREE | | | | |
| | 103 | 5MBTPB3006TW++R | B1A53060 | B ND T.T SCREW(+) / M3 X 6 CRFREE S-T | | | | |

- Parts with "•" are component parts or sub-assemblies of the assembly appearing immediately above them.
- Parts with "⊙" indicate regular maintenance parts.

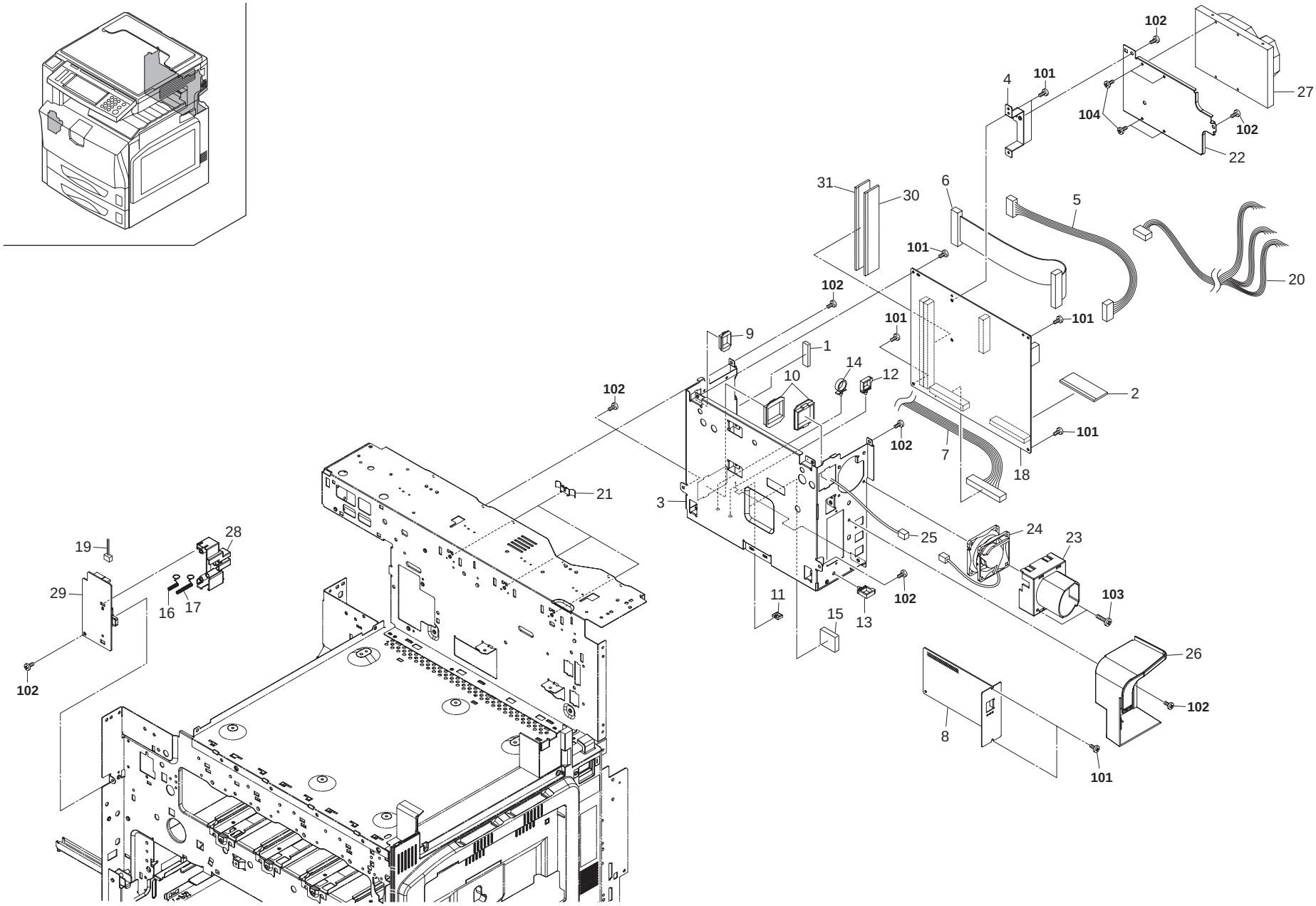
102
4
101
27
104
102
22
31
30
6
5
101
20
102
101
101
9
1
14
10
12
102
2
101
102
7
18
21
3
25
24
23
19
28
29
16
17
11
15
13
102
103
26
102
8
101
102

| | Ref. No. | Part.No. | Alternative. | Description | Quantity 110 | 120 | 230 | 240 |
|---|---|---|---|---|---|---|---|---|
| | 1 | 2A627240 | | SHIELD 5X1X30,GASKET | 1 | 1 | 1 | 1 |
| ⊙ | 2 | 302FZ01220 | 2FZ01220 | PRINTED W.BOARD DIMM IPU U ASSY (25/25ppm) (32/25ppm) (32/32ppm) | | 1 | | |
| ⊙ | 2 | 302JD94060 | 2JD94060 | PARTS,PWB DIMM IPU U ASSY SP (40/35ppm) | | 1 | | |
| ⊙ | 2 | 302FZ01230 | 2FZ01230 | PRINTED W.BOARD D MM PU E ASSY (25/25ppm) (32/25ppm) (32/32ppm) | | | 1 | 1 |
| ⊙ | 2 | 302JD94070 | 2JD94070 | PARTS,PWB DIMM IPU E ASSY SP (40/35ppm) | | | 1 | 1 |
| ⊙ | 2 | 302FZ01340 | 2FZ01340 | PRINTED W.BOARD D MM PU TW ASSY (25/25ppm) (32/25ppm) (32/32ppm) | 1 | | | |
| ⊙ | 3 | 302FZ39030 | 2FZ39030 | MOUNT IPU | 1 | 1 | 1 | 1 |
| | 4 | 302FZ39090 | 2FZ39090 | BRACKET HDD LOWER | 1 | 1 | 1 | 1 |
| | 5 | 302FZ46300 | 2FZ46300 | WIRE HDD POWER | 1 | 1 | 1 | 1 |
| | 6 | 302FZ46630 | 2FZ46630 | WIRE HDD | 1 | 1 | 1 | 1 |
| | 7 | 302FZ46651 | 2FZ46651 | WIRE IPU ENGINE | 1 | 1 | 1 | 1 |
| ⊙ | 8 | 303JR01011 | 3JR01011 | SCANNER NIC ASS'Y | 1 | 1 | 1 | 1 |
| | 9 | 7YZM210002++H01 | YZ004730 | ACCESS.EDGING | 1 | 1 | 1 | 1 |
| | 10 | 7YZM210004++H01 | YZ037980 | ACCESS.EDGING | 2 | 2 | 2 | 2 |
| | 11 | 7YZM210006++H01 | YZ038000 | ACCESS.EDGING | 1 | 1 | 1 | 1 |
| | 12 | 7YZM610003++H01 | YZ010250 | ACCESS SADDLE | 1 | 1 | 1 | 1 |
| | 13 | 7YZM610004++H01 | YZ012210 | ACCESS SADDLE | 1 | 1 | 1 | 1 |
| | 14 | 7YZM610016++H01 | YZ047890 | ACCESS.SADDLE | 1 | 1 | 1 | 1 |
| | 15 | 7ZS40405001+H01 | ZS044250 | THERMAL SHEET | 1 | 1 | 1 | 1 |
| ⊙ | 16 | 302FZ39620 | 2FZ39620 | SPRING HV2 TC | 1 | 1 | 1 | 1 |
| ⊙ | 17 | 302FZ39630 | 2FZ39630 | SPRING HV2 SE | 1 | 1 | 1 | 1 |
| ⊙ | 18 | 302FZ94052 | 2FZ94052 | PARTS,PWB IPU ASS'Y,SP (25/25ppm) (32/25ppm) (32/32ppm) | 1 | 1 | 1 | 1 |
| ⊙ | 18 | 302JD94050 | 2JD94050 | PARTS,PWB IPU U ASSY SP (40/35ppm) | | 1 | 1 | 1 |
| | 19 | 302FZ46130 | 2FZ46130 | WIRE HVU 3 (25/25ppm) (32/25ppm) (32/32ppm) | 1 | 1 | 1 | 1 |
| | 19 | 302JD46030 | 2JD46030 | WIRE HVU 3 (40/35ppm) | | 1 | 1 | 1 |
| | 20 | 302FZ46612 | 2FZ46612 | WIRE PANNEL L | 1 | 1 | 1 | 1 |
| | 21 | 302FZ39770 | 2FZ39770 | PLATE EARTH ISU REAR | 3 | 3 | 3 | 3 |
| | 22 | 302FZ39040 | 2FZ39040 | BRACKET HDD | 1 | 1 | 1 | 1 |
| | 23 | 302FZ39860 | 2FZ39860 | DUCT IPU | 1 | 1 | 1 | 1 |
| ⊙ | 24 | 302FZ94420 | 2FZ94420 | PARTS,FAN COOLING CONVEY NG SP | 1 | 1 | 1 | 1 |
| | 25 | 302FZ46670 | 2FZ46670 | WIRE LSU FAN | 1 | 1 | 1 | 1 |
| | 26 | 302FZ04460 | 2FZ04460 | COVER REAR OP | 1 | 1 | 1 | 1 |
| ⊙ | 27 | 7NH3M040G003H01 | NH045080 | STORAGE DEVICE | 1 | 1 | 1 | 1 |
| | 28 | 302FZ39610 | 2FZ39610 | HOLDER HV2 TC | 1 | 1 | 1 | 1 |
| ⊙ | 29 | 302FZ45051 | 2FZ45051 | HVU TRANSFER 2 (25/25ppm) (32/25ppm) (32/32ppm) | 1 | 1 | 1 | 1 |
| ⊙ | 29 | 302JD94110 | 2JD94110 | PARTS,PWB HVU TRANSFER 2 ASSY SP (40/35ppm) | | 1 | 1 | 1 |
| ⊙ | 30 | 7NMDD256MJ41H01 | NM038860 | MEMORY MODULE | 1 | 1 | 1 | 1 |
| ⊙ | 31 | 7NMDD512MJ41H01 | NM038870 | MEMORY MODULE | 1 | 1 | 1 | 1 |

| | Ref. No. | Part.No. | Alternative. | Description | Quantity 110 | 120 | 230 | 240 |
|---|---|---|---|---|---|---|---|---|
| | 101 | 5MBTPB3006TW++R | B1A53060 | B ND T.T SCREW(+) / M3 X 6 CRFREE S-T | | | | |
| | 102 | B1A54080 | | +BIND TAP-TITE S SCREW M4X08 | | | | |
| | 103 | B1B54300 | | +BIND TAP-TITE S SCREW M4X30(TRIVAL | | | | |
| | 104 | B9A90010 | | +PAN SCREW 6-32X0 25 | | | | |

- Parts with "•" are component parts or sub-assemblies of the assembly appearing immediately above them.
- Parts with "⊙" indicate regular maintenance parts.

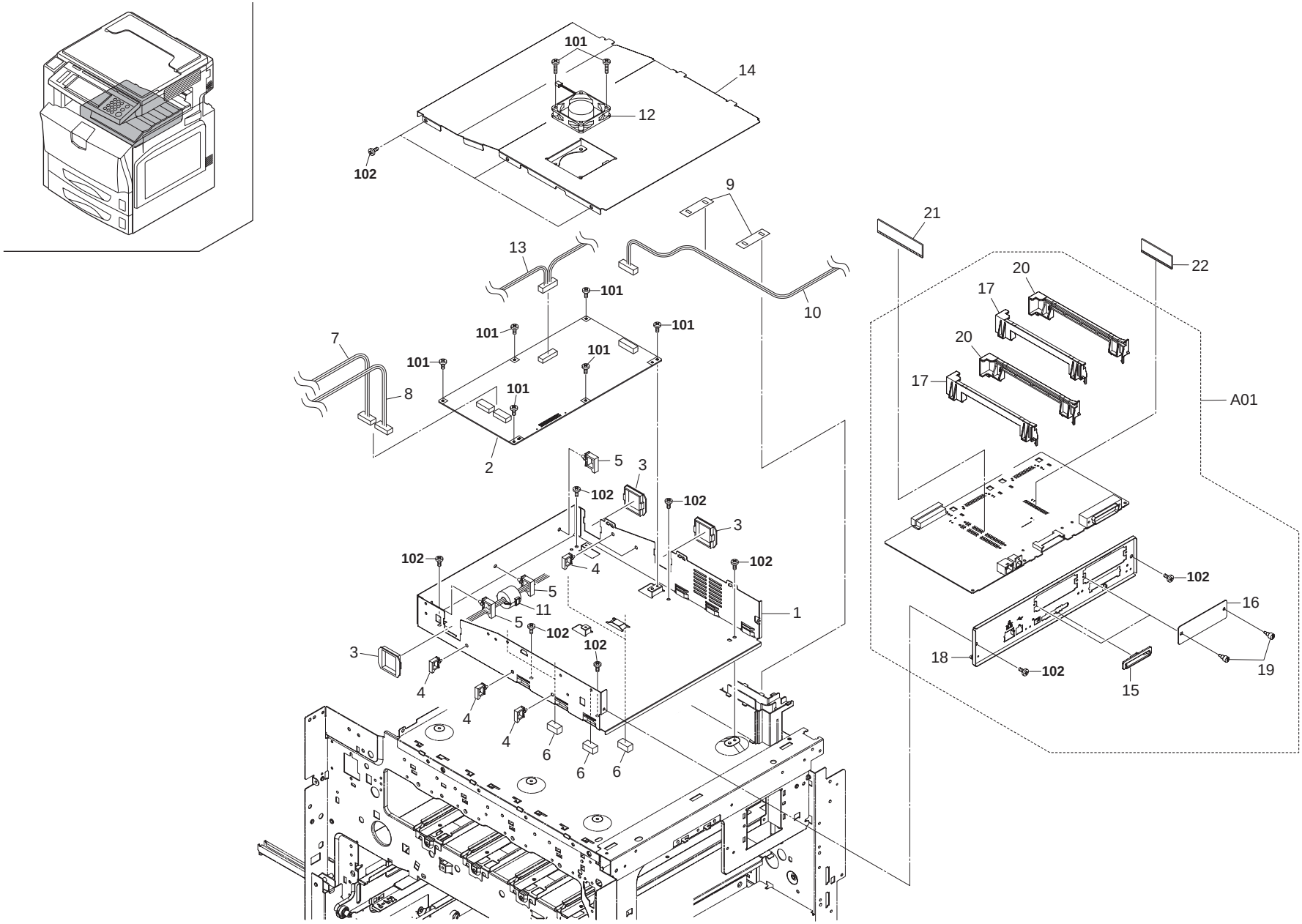
101
14
12
102
9
21
22
13
101
10
20
17
101
101
7
101
101
20
17
8
101
A01
2
5
3
102
102
3
102
102
4
5
11
1
5
102
102
3
4
4
4
6
6
6
102
16
18
102
19
15

FIG. 26 Controller Box

| | Ref. No. | Part.No. | Alternative. | Description | Quantity 110 | 120 | 230 | 240 |
|---|---|---|---|---|---|---|---|---|
| ⊙ | 1 | 302FZ39010 | 2FZ39010 | CONTROLLER BOX | 1 | 1 | 1 | 1 |
| ⊙ | 2 | 302FZ93453 | 2FZ93453 | PARTS PRINTED W.BOARD ENG NE ASSY (25/25ppm) (32/25ppm) (32/32ppm) | 1 | 1 | 1 | 1 |
| ⊙ | 2 | 302JD93090 | 2JD93090 | PARTS PRINTED W.BOARD ENG NE (40/35ppm) | | 1 | 1 | 1 |
| | 3 | 7YZM210004++H01 | YZ037980 | ACCESS.EDGING | 3 | 3 | 3 | 3 |
| | 4 | 7YZM610003++H01 | YZ010250 | ACCESS SADDLE | 5 | 5 | 5 | 5 |
| | 5 | 7YZM610005++H01 | YZ012220 | ACCESS SADDLE | 3 | 3 | 3 | 3 |
| | 6 | 7ZGSSTG31020H01 | ZG046820 | SHIELD GASKET | 5 | 5 | 5 | 5 |
| | 7 | 302FZ46150 | 2FZ46150 | WIRE DRUM-DLP KY | 1 | 1 | 1 | 1 |
| | 8 | 302FZ46140 | 2FZ46140 | WIRE DRUM-DLP CM | 1 | 1 | 1 | 1 |
| | 9 | 302FZ39840 | 2FZ39840 | SHEET WIRE | 2 | 2 | 2 | 2 |
| | 10 | 302FZ46071 | 2FZ46071 | WIRE APC | 1 | 1 | 1 | 1 |
| | 11 | 2AV27440 | | CORE 15-26X13 | 1 | 1 | 1 | 1 |
| ⊙ | 12 | 302FZ44040 | 2FZ44040 | FAN BOX COOLING | 1 | 1 | 1 | 1 |
| | 13 | 302FZ46340 | 2FZ46340 | WIRE JOB | 1 | 1 | 1 | 1 |
| | 14 | 302FZ39020 | 2FZ39020 | COVER CONTROLLER | 1 | 1 | 1 | 1 |
| ⊙ | A01 | 302FZ93423 | 2FZ93423 | PARTS PRINTED W.BOARD CONTROL ASSY (25/25ppm) (32/25ppm) | 1 | 1 | 1 | 1 |
| ⊙ | A01 | 302HC93012 | 2HC93012 | PARTS PRINTED W.BOARD CONTROL ASSY (32/32ppm) (40/35ppm) | 1 | 1 | 1 | 1 |
| | 15 | •2DA26520 | | GU DE CF | 1 | 1 | 1 | 1 |
| | 16 | •2DD26070 | | PLATE OPTION | 2 | 2 | 2 | 2 |
| | 17 | •302BL26211 | 2BL26211 | RAIL OPTION A /B-05 CONT BOX A2 | 2 | 2 | 2 | 2 |
| | 18 | •302FZ39060 | 2FZ39060 | PLATE CONTROLLER | 1 | 1 | 1 | 1 |
| | 19 | •5MMT263SN012++R | 2D903100 | SCREW OP / M3 X 8 CRFREE A4 | 4 | 4 | 4 | 4 |
| | 20 | •5MVB743SL005 | 2BL26220 | RAIL OPTION B /B-05 CONT BOX A2 | 2 | 2 | 2 | 2 |
| ⊙ | 21 | 7NMDD256MA01H01 | NM037700 | MEMORY MODULE | 1 | 1 | 1 | 1 |
| ⊙ | 22 | 302JD94080 | 2JD94080 | PARTS,PWB DIMM PR NTER ASSY SP | 1 | 1 | 1 | 1 |

| | Ref. No. | Part.No. | Alternative. | Description | Quantity 110 | 120 | 230 | 240 |
|---|---|---|---|---|---|---|---|---|
| | 101 | 5MBTPB3006TW++R | B1A53060 | B ND T.T SCREW(+) / M3 X 6 CRFREE S-T | | | | |
| | 102 | B1A54080 | | +BIND TAP-TITE S SCREW M4X08 | | | | |

- Parts with "•" are component parts or sub-assemblies of the assembly appearing immediately above them.
- Parts with "⊙" indicate regular maintenance parts.

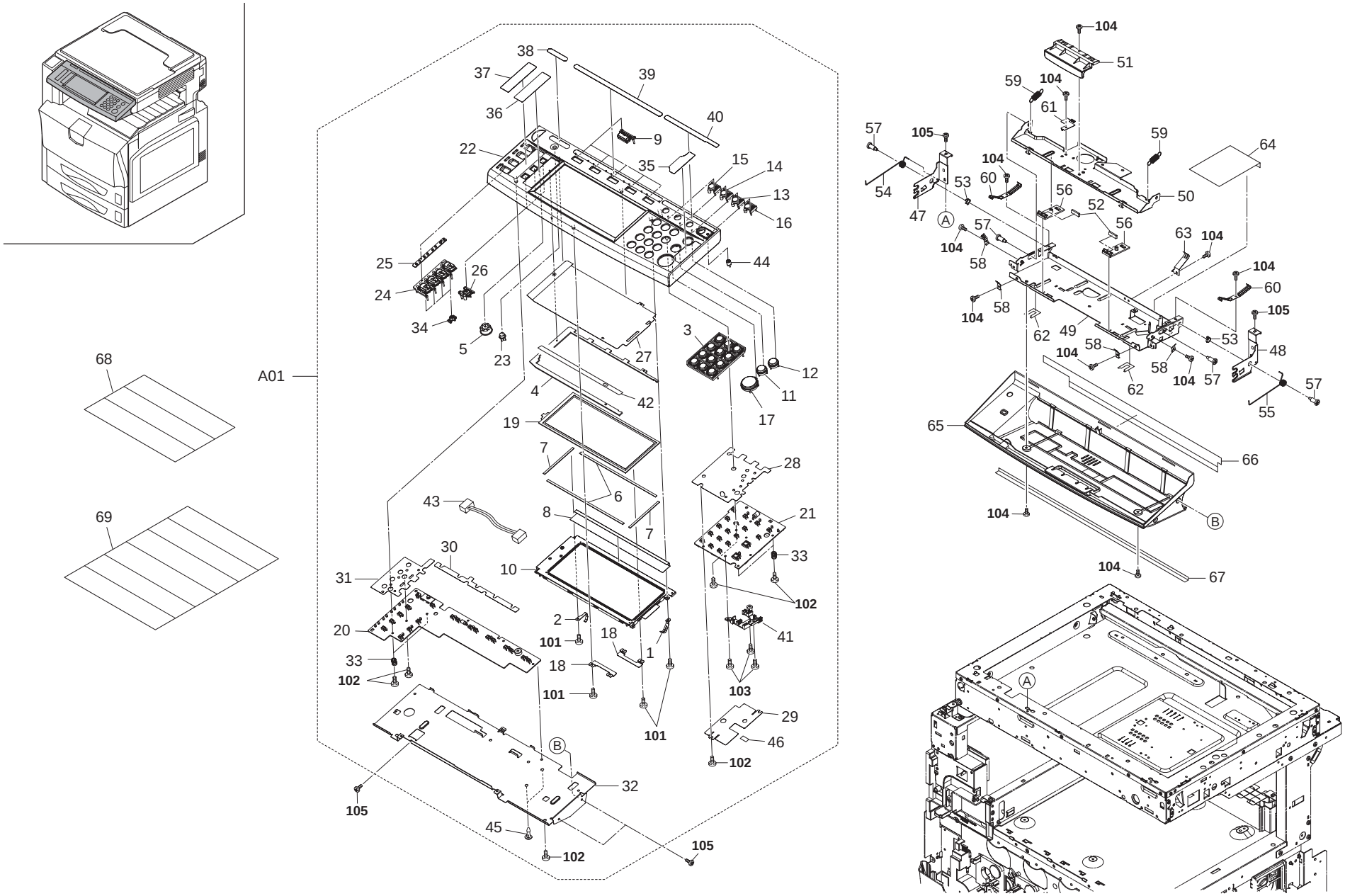
A01
68
69
104
105
101
102
103
A
B

FIG. 27 Operation Unit

| | Ref. No. | Part.No. | Alternative. | Description | Quantity 110 | 120 | 230 | 240 |
|---|---|---|---|---|---|---|---|---|
| ⊙ | A01 | 302FZ93201 | 2FZ93201 | PARTS OPERATION UPPER E ASS'Y | | 1 | 1 | 1 |
| ⊙ | A01 | 302FZ93520 | 2FZ93520 | PARTS OPERATION UPPER TW ASSY | 1 | | | |
| | 1 | •2BJ04220 | | GROUND PLATE LCD A | 1 | 1 | 1 | 1 |
| | 2 | •2BJ04240 | | GROUND PLATE LCD C | 1 | 1 | 1 | 1 |
| ⊙ | 3 | •2BJ25020 | | KEY OPERATION 10 | 1 | 1 | 1 | 1 |
| | 4 | •2BJ25240 | | BARR ER TABLET | 1 | 1 | 1 | 1 |
| | 5 | •2BJ25250 | | VOLUME OPE UNIT | 1 | 1 | 1 | 1 |
| | 6 | •2BJ25270 | | SPONGE LCD A | 2 | 2 | 2 | 2 |
| | 7 | •2BJ25280 | | SPONGE LCD B | 2 | 2 | 2 | 2 |
| | 8 | •2BJ25400 | | SHEET LCD A | 1 | 1 | 1 | 1 |
| ⊙ | 9 | •2FB24150 | | KEY FUNCTION J | 5 | 5 | 5 | 5 |
| ⊙ | 10 | •2FB28190 | | LCD PWB | 1 | 1 | 1 | 1 |
| ⊙ | 11 | •302BJ25041 | 2BJ25041 | KEY STOP | 1 | 1 | 1 | 1 |
| ⊙ | 12 | •302BJ25051 | 2BJ25051 | KEY RESET | 1 | 1 | 1 | 1 |
| ⊙ | 13 | •302BJ25061 | 2BJ25061 | KEY SAVER | 1 | 1 | 1 | 1 |
| ⊙ | 14 | •302BJ25071 | 2BJ25071 | KEY NTERRUPT | 1 | 1 | 1 | 1 |
| ⊙ | 15 | •302BJ25081 | 2BJ25081 | KEY CONTROL | 1 | 1 | 1 | 1 |
| ⊙ | 16 | •302FB24061 | 2FB24061 | KEY POWER SUPPLY | 1 | 1 | 1 | 1 |
| ⊙ | 17 | •302FB24200 | 2FB24200 | KEY PRINT | 1 | 1 | 1 | 1 |
| | 18 | •302FB24250 | 2FB24250 | RETAINER LCD | 2 | 2 | 2 | 2 |
| | 19 | •302FB25190 | 2FB25190 | TABLET OPERATION | 1 | 1 | 1 | 1 |
| ⊙ | 20 | •302FZ01080 | 2FZ01080 | PRINTED W.BOARD PANEL A | 1 | 1 | 1 | 1 |
| ⊙ | 21 | •302FZ01090 | 2FZ01090 | PRINTED W.BOARD PANEL B | 1 | 1 | 1 | 1 |
| ⊙ | 22 | •302FZ05010 | 2FZ05010 | COVER OPERATION | 1 | 1 | 1 | 1 |
| ⊙ | 23 | •302FZ05020 | 2FZ05020 | KEY NIT | 1 | 1 | 1 | 1 |
| ⊙ | 24 | •302FZ05030 | 2FZ05030 | LEFT KEY FUNCTION | 1 | 1 | 1 | 1 |
| ⊙ | 25 | •302FZ05040 | 2FZ05040 | LENS LED FUNCTION | 1 | 1 | 1 | 1 |
| ⊙ | 26 | •302FZ05050 | 2FZ05050 | KEY COLOR | 3 | 3 | 3 | 3 |
| | 27 | •302FZ05060 | 2FZ05060 | SHEET TABLET | 1 | 1 | 1 | 1 |
| | 28 | •302FZ05070 | 2FZ05070 | RIGHT DUST SHIELD | 1 | 1 | 1 | 1 |
| | 29 | •302FZ05080 | 2FZ05080 | SHEET OPERATION PWB | 1 | 1 | 1 | 1 |
| | 30 | •302FZ05090 | 2FZ05090 | CENTER DUST SHIELD | 1 | 1 | 1 | 1 |
| | 31 | •302FZ05100 | 2FZ05100 | LEFT DUST SHIELD | 1 | 1 | 1 | 1 |
| | 32 | •302FZ05110 | 2FZ05110 | SHIELD BASE OPERATION | 1 | 1 | 1 | 1 |
| | 33 | •302FZ05190 | 2FZ05190 | SPRING EARTH KEYTOP | 4 | 4 | 4 | 4 |
| ⊙ | 34 | •302FZ05200 | 2FZ05200 | LENS LED FUNCTION KEY | 4 | 4 | 4 | 4 |
| ⊙ | 35 | •302FZ05250 | 2FZ05250 | LABEL START E | | 1 | 1 | 1 |
| ⊙ | 35 | •302FZ05410 | 2FZ05410 | LABEL START TW | 1 | | | |
| ⊙ | 36 | •302FZ05260 | 2FZ05260 | LABEL COLOR E | | 1 | 1 | 1 |
| ⊙ | 36 | •302FZ05420 | 2FZ05420 | LABEL COLOR TW | 1 | | | |
| ⊙ | 37 | •302FZ05270 | 2FZ05270 | LABEL APPLICATION E | | 1 | 1 | 1 |
| ⊙ | 37 | •302FZ05430 | 2FZ05430 | LABEL APPLICATION TW | 1 | | | |
| ⊙ | 38 | •302FZ05280 | 2FZ05280 | LABEL SYSTEM MENU E | | 1 | 1 | 1 |
| ⊙ | 38 | •302FZ05440 | 2FZ05440 | LABEL SYSTEM MENU TW | 1 | | | |
| ⊙ | 39 | •302FZ05290 | 2FZ05290 | LABEL FUNCTION E | | 1 | 1 | 1 |
| ⊙ | 39 | •302FZ05450 | 2FZ05450 | LABEL FUNCTION TW | 1 | | | |
| ⊙ | 40 | •302FZ05300 | 2FZ05300 | LABEL OPE COVER E | | 1 | 1 | 1 |
| ⊙ | 40 | •302FZ05460 | 2FZ05460 | LABEL OPE COVER TW | 1 | | | |
| | 41 | •302FZ05320 | 2FZ05320 | SPACER START KEY | 1 | 1 | 1 | 1 |
| | 42 | •302FZ05400 | 2FZ05400 | SPACER COVER OPE A | 1 | 1 | 1 | 1 |

| | Ref. No. | Part.No. | Alternative. | Description | Quantity 110 | 120 | 230 | 240 |
|---|---|---|---|---|---|---|---|---|
| | 43 | •302FZ46600 | 2FZ46600 | WIRE LCD | 1 | 1 | 1 | 1 |
| | 44 | •302GR05280 | 2GR05280 | LENS POWER LED | 1 | 1 | 1 | 1 |
| | 45 | •7YZM510006++H01 | YZ042710 | ACCESS.SPACER | 2 | 2 | 2 | 2 |
| | 46 | •7ZS15063001+H01 | ZS041810 | THERMAL SHEET | 1 | 1 | 1 | 1 |
| | 47 | 302GR05030 | 2GR05030 | HINGE OPERATION L | 1 | 1 | 1 | 1 |
| | 48 | 302GR05040 | 2GR05040 | HINGE OPERATION R | 1 | 1 | 1 | 1 |
| | 49 | 302GR05050 | 2GR05050 | BASE OPERATION | 1 | 1 | 1 | 1 |
| | 50 | 302GR05060 | 2GR05060 | MOUNT HANDLE OPE | 1 | 1 | 1 | 1 |
| | 51 | 302GR05070 | 2GR05070 | HANDLE OPE | 1 | 1 | 1 | 1 |
| | 52 | 302GR05080 | 2GR05080 | CUSHION HANDLE A | 2 | 2 | 2 | 2 |
| | 53 | 302GR05090 | 2GR05090 | BUSH PIN OPE | 2 | 2 | 2 | 2 |
| | 54 | 302GR05100 | 2GR05100 | SPRING HINGE OPE L | 1 | 1 | 1 | 1 |
| | 55 | 302GR05110 | 2GR05110 | SPRING HINGE OPE R | 1 | 1 | 1 | 1 |
| | 56 | 302GR05120 | 2GR05120 | MOUNT SLIDE | 2 | 2 | 2 | 2 |
| | 57 | 302GR05130 | 2GR05130 | P N OPERATION | 4 | 4 | 4 | 4 |
| | 58 | 302GR05320 | 2GR05320 | GROUND PLATE OPE A | 4 | 4 | 4 | 4 |
| | 59 | 302GR05350 | 2GR05350 | SPRING MOUNT HANDLE A | 2 | 2 | 2 | 2 |
| | 60 | 302GR05510 | 2GR05510 | GROUND PLATE OPE B | 2 | 2 | 2 | 2 |
| | 61 | 302GR05520 | 2GR05520 | GROUND PLATE OPE C | 1 | 1 | 1 | 1 |
| | 62 | 302GR05650 | 2GR05650 | FILM OPERATION A | 2 | 2 | 2 | 2 |
| | 63 | 302FB09320 | 2FB09320 | GROUND PLATE DECK UNIT | 1 | 1 | 1 | 1 |
| ⊙ | 64 | 302FZ05550 | 2FZ05550 | SHEET OPERATION WIRE | 1 | 1 | 1 | 1 |
| ⊙ | 65 | 302FZ05240 | 2FZ05240 | COVER OPERATION B | 1 | 1 | 1 | 1 |
| ⊙ | 66 | 302GR04470 | 2GR04470 | SHEET OPE PROTECT B | 1 | 1 | 1 | 1 |
| ⊙ | 67 | 302GR04480 | 2GR04480 | FILM PROTECT | 1 | 1 | 1 | 1 |
| | 68 | 302FZ05480 | 2FZ05480 | LABEL OPE B | | 1 | | |
| | 69 | 302FZ05470 | 2FZ05470 | LABEL OPE A | | | 1 | 1 |
| | 101 | B0B63060 | | +PAN TAP-TITE P SCREW M3X06 | | | | |
| | 102 | 5MBTPB3008PW++R | B1A63080 | B ND T.T SCREW(+) / M3 X 8 CRFREE P-T | | | | |
| | 103 | 5MBTPB3010PW++R | B1B63100 | B ND T.T SCREW(+) / M3 X 10 CRFREE P-T | | | | |
| | 104 | 5MBSPB3006NW++R | B1B03060 | B ND HEAD SCREW(+) / M3 X 6 CRFREE | | | | |
| | 105 | B1A54080 | | +BIND TAP-TITE S SCREW M4X08 | | | | |

- Parts with "•" are component parts or sub-assemblies of the assembly appearing immediately above them.
- Parts with "⊙" indicate regular maintenance parts.

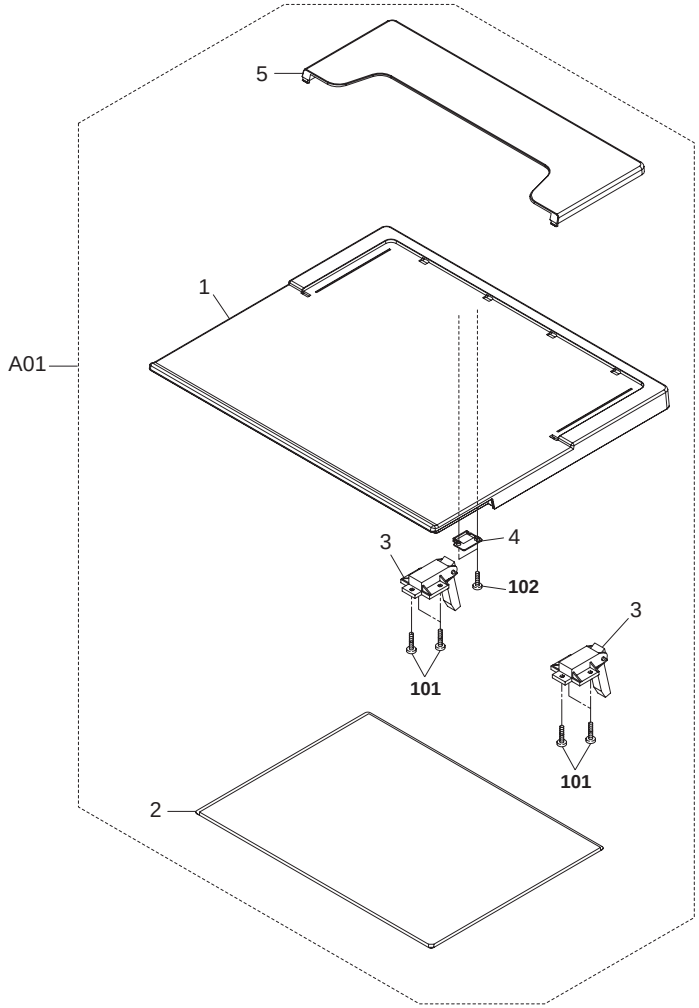
5
1
A01
3
4
102
3
101
101
2

FIG. 28 Options I

| | Ref. No. | Part.No. | Alternative. | Description | Quantity 110 | 120 | 230 | 240 |
|---|---|---|---|---|---|---|---|---|
| ⊙ | A01 | 2CX82010 | | SET,PLATEN COVER TYPE D (OPTION) | 1 | 1 | 1 | 1 |
| | 1 | •2A612800 | | COVER,PLATEN | 1 | 1 | 1 | 1 |
| | 2 | •2A612810 | | MAT,ORIGINAL HOLDER | 1 | 1 | 1 | 1 |
| | 3 | •2A612820 | | H NGE,ORIGINAL HOLDER | 2 | 2 | 2 | 2 |
| | 4 | •2C912630 | | STOPPER RELEASE SWITCH | 1 | 1 | 1 | 1 |
| | 5 | •60904280 | | ORIGINAL POCKET | 1 | 1 | 1 | 1 |

| | Ref. No. | Part.No. | Alternative. | Description | Quantity 110 | 120 | 230 | 240 |
|---|---|---|---|---|---|---|---|---|
| | 101 | 5MBTPB4010PW++R | B1A64100 | B ND T.T SCREW(+) / M4 X 10 CRFREE P-T | | | | |
| | 102 | 5MBTPB3012PW++R | B1A63120 | B ND T.T SCREW(+) / M3 X 12 CRFREE P-T | | | | |

- Parts with "•" are component parts or sub-assemblies of the assembly appearing immediately above them.
- Parts with "⊙" indicate regular maintenance parts.

## DT-700

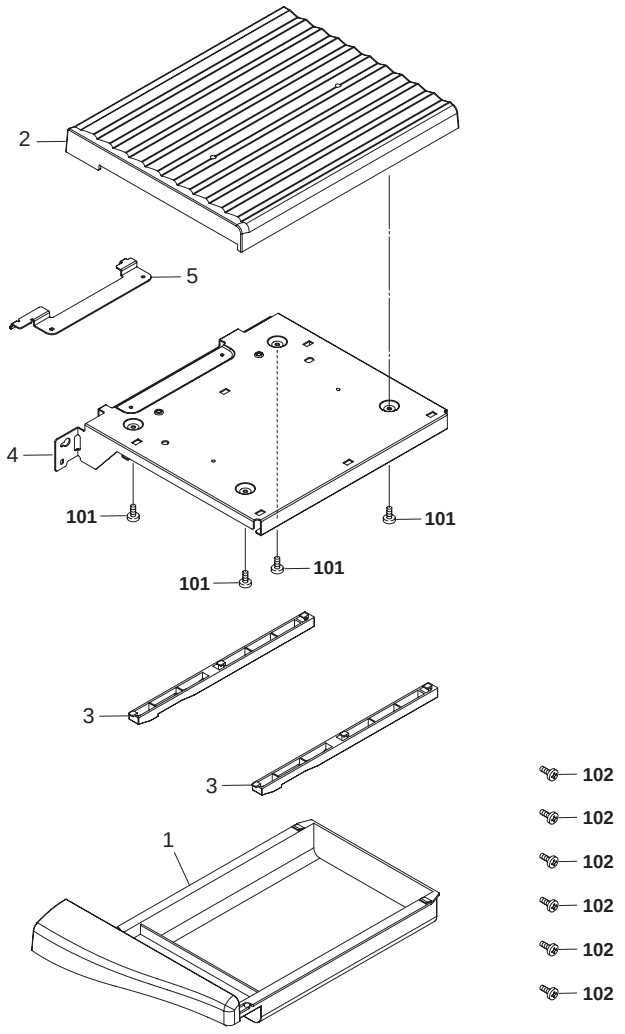


## Key Counter

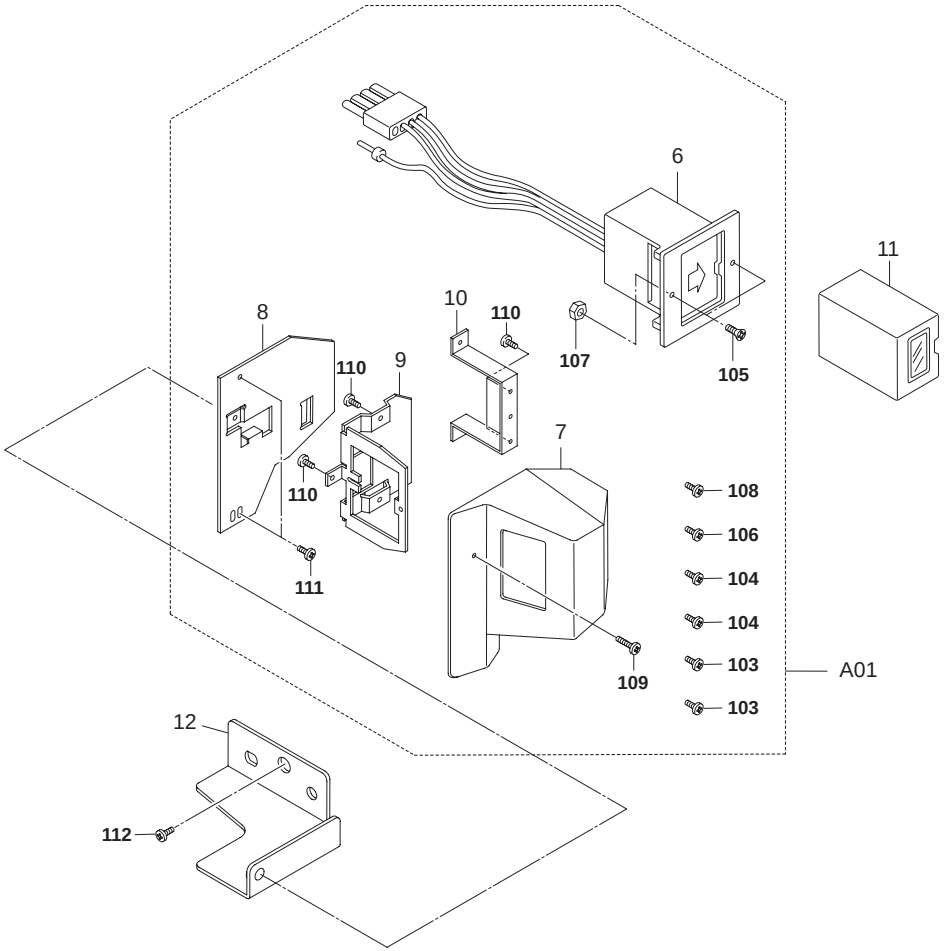

| | Ref. No. | Part.No. | Alternative. | Description | Quantity 110 | 120 | 230 | 240 |
|---|---|---|---|---|---|---|---|---|
| | 1 | 2BJ60530 | | LOWER WING TRAY | 1 | 1 | 1 | 1 |
| | 2 | 302BJ60521 | 2BJ60521 | UPPER WING TRAY | 1 | 1 | 1 | 1 |
| | 3 | 302BJ60541 | 2BJ60541 | RAIL WING TRAY | 2 | 2 | 2 | 2 |
| | 4 | 302GR04490 | 2GR04490 | MOUNT WING TRAY | 1 | 1 | 1 | 1 |
| | 5 | 302GR04500 | 2GR04500 | HOLDER WING TRAY | 1 | 1 | 1 | 1 |
| ⊙ | A01 | 302A369707 | 2A369707 | SET PARTS KEYCOUNTER NEW COLOR | 1 | 1 | 1 | 1 |
| | 6 | •3029236241 | 29236241 | SOCKET ASS'Y,KEY COUNTER | 1 | 1 | 1 | 1 |
| | 7 | •3066060011 | 66060011 | COVER,KEY COUNTER | 1 | 1 | 1 | 1 |
| | 8 | •3066060023 | 66060023 | RETA NER,KEY COUNTER COVER | 1 | 1 | 1 | 1 |
| | 9 | •3066060031 | 66060031 | RETA NER,KEY COUNTER | 1 | 1 | 1 | 1 |
| | 10 | •3066060041 | 66060041 | MOUNT,KEY COUNTER | 1 | 1 | 1 | 1 |
| ⊙ | 11 | 82142540 | | KEY COUNTER | 1 | 1 | 1 | 1 |
| ⊙ | 12 | 302FZ03010 | 2FZ03010 | MOUNT KEY COUNTER | 1 | 1 | 1 | 1 |

| | Ref. No. | Part.No. | Alternative. | Description | Quantity 110 | 120 | 230 | 240 |
|---|---|---|---|---|---|---|---|---|
| | 101 | 5MBTPB3006PW++R | B1B63060 | B ND T.T SCREW(+) / M3 X 6 CRFREE P-T | | | | |
| | 102 | 5MBTPB3006TW++R | B1A53060 | B ND T.T SCREW(+) / M3 X 6 CRFREE S-T | | | | |
| | 103 | 5MBTPB4010PW++R | B1A64100 | B ND T.T SCREW(+) / M4 X 10 CRFREE P-T | | | | |
| | 104 | 5MBTPB4010TW++R | B1A54100 | B ND T.T SCREW(+) / M4 X 10 CRFREE S-T | | | | |
| | 105 | 7BB003306H | BB040750 | +COUNTER-SUNK HEAD SCREW M3X6 CR | | | | |
| | 106 | 7BB100420H | BB040740 | +BIND TAP-TITE S SCREW M4X20 CRFREE | | | | |
| | 107 | 7BC1003055++H01 | BC018230 | HEXA NUT M3 | | | | |
| | 108 | B1B03080 | | +BIND SCREW M3X08 | | | | |
| | 109 | B1B54300 | | +BIND TAP-TITE S SCREW M4X30(TRIVAL | | | | |
| | 110 | B4A04060 | | +TP-A SCREW M4X06(TRIVALENT CHROM | | | | |
| | 111 | B4A04100 | | +TP-A SCREW M4X10(TRIVALENT CHROM | | | | |
| | 112 | B1A54080 | | +BIND TAP-TITE S SCREW M4X08 | | | | |

- Parts with "•" are component parts or sub-assemblies of the assembly appearing immediately above them.
- Parts with "⊙" indicate regular maintenance parts.

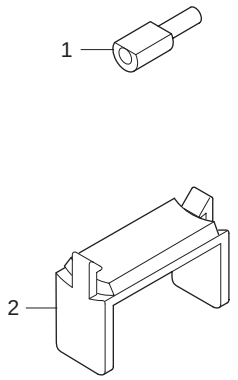
1
2

FIG. 30 Accessories & Tools

| | Ref. No. | Part.No. | Alternative. | Description | Quantity | | | |
|---|---|---|---|---|---|---|---|---|
| | | | | | 110 | 120 | 230 | 240 |
| | 1 | 18568120 | | PIN B,POSITIONING | 2 | 2 | 2 | 2 |
| ⊙ | 2 | 35968110 | | STOPPER WIRE ASS'Y SP | 2 | 2 | 2 | 2 |

- Parts with "•" are component parts or sub-assemblies of the assembly appearing immediately above them.
- Parts with "⊙" indicate regular maintenance parts.

FIG. 31 Maintenance Kits

| | Ref. No. | Part.No. | Alternative. | Description | Quantity | | | |
|---|---|---|---|---|---|---|---|---|
| | | | | | 110 | 120 | 230 | 240 |
| | | 1702FZ0UN0 | 072FZ0UN | MK-825B (OPTION) | 1 | 1 | 1 | 1 |
| | | | | •DLP Y ASS'Y | 1 | 1 | 1 | 1 |
| | | | | •DLP C ASS'Y | 1 | 1 | 1 | 1 |
| | | | | •DLP M ASS'Y | 1 | 1 | 1 | 1 |
| | | | | •CLEANING KIT C | 1 | 1 | 1 | 1 |
| | | 1702FZ7US0 | 072FZ7US | MK-825/MAINTENANCE KIT (OPTION) (25/25ppm) (32/25ppm) (32/32ppm) | | 1 | | |
| | | | | •DLP K ASS'Y | | 1 | | |
| | | | | •FUSER 120 ASS'Y | | 1 | | |
| | | | | •ROLLER TRANSFER | | 1 | | |
| | | | | •DRUM ASS'Y | | 4 | | |
| | | | | •PARTS TRANSFER BELT ASS'Y | | 1 | | |
| | | | | •CLEANING KIT C | | 1 | | |
| | | 1702JF7US0 | 072JF7US | MK-826A/MA NTENANCE KIT (OPTION) (40/35ppm) | | 1 | | |
| | | | | •DLP K ASS'Y | | 1 | | |
| | | | | •FUSER 120 ASS'Y | | 1 | | |
| | | | | •ROLLER TRANSFER | | 1 | | |
| | | | | •DRUM ASS'Y | | 4 | | |
| | | | | •PARTS TRANSFER BELT ASS'Y | | 1 | | |
| | | | | •CLEANING KIT C | | 1 | | |
| | | 1702FZ8NL0 | 072FZ8NL | MK-825(NL)/MA NTENANCE KIT (OPTION) (25/25ppm) (32/25ppm) (32/32ppm) | | | 1 | 1 |
| | | | | •DLP K ASS'Y | | | 1 | 1 |
| | | | | •FUSER 200 ASS'Y | | | 1 | 1 |
| | | | | •ROLLER TRANSFER | | | 1 | 1 |
| | | | | •DRUM ASS'Y | | | 4 | 4 |
| | | | | •PARTS TRANSFER BELT ASS'Y | | | 1 | 1 |
| | | | | •CLEANING KIT C | | | 1 | 1 |
| | | 1702JF8NL0 | 072JF8NL | MK-826A/MA NTENANCE KIT (OPTION) (40/35ppm) | | | 1 | 1 |
| | | | | •DLP K ASS'Y | | | 1 | 1 |
| | | | | •FUSER 200 ASS'Y | | | 1 | 1 |
| | | | | •ROLLER TRANSFER | | | 1 | 1 |
| | | | | •DRUM ASS'Y | | | 4 | 4 |
| | | | | •PARTS TRANSFER BELT ASS'Y | | | 1 | 1 |
| | | | | •CLEANING KIT C | | | 1 | 1 |
| | | 1702FZTTW0 | 72FZTTW | MK-825A(TW)/MA NTENANCE KIT (OPTION) | 1 | | | |
| | | | | •DLP K ASS'Y | 1 | | | |
| | | | | •FUSER 110 ASS'Y | 1 | | | |
| | | | | •ROLLER TRANSFER | 1 | | | |
| | | | | •DRUM ASS'Y | 4 | | | |
| | | | | •PARTS TRANSFER BELT ASS'Y | 1 | | | |
| | | | | •CLEANING KIT C | 1 | | | |

- Parts with "•" are component parts or sub-assemblies of the assembly appearing immediately above them.
- Parts with "⊙" indicate regular maintenance parts.

| | Part.No. | Alterna ive. | Description | Fig.No. |
|---|---|---|---|---|
| | 1702FZ0UN0 | 072FZ0UN | MK-825B | 31 |
| | 1702FZ7US0 | 072FZ7US | MK-825/MAINTENANCE KIT | 31 |
| | 1702FZ8NL0 | 072FZ8NL | MK-825(NL)/MAINTENANCE KIT | 31 |
| | 1702FZTTW0 | 72FZTTW | MK-825A(TW)/MAINTENANCE KIT | 31 |
| | 1702JF7US0 | 072JF7US | MK-826A/MAINTENANCE KIT | 31 |
| | 1702JF8NL0 | 072JF8NL | MK-826A/MAINTENANCE KIT | 31 |
| | 18568120 | | PIN B,POSITIONING | 30 |
| | 20305130 | | LABEL L,HIGH TEMPERATURE CAUTION(EXP) | 23 |
| | 28107400 | | BEARING,688ZZNR | 11 |
| | 29812291 | | CUSHION,CONTACT GLASS | 12 |
| | 2A105180 | | LABEL,CAUTION CONTACT GLASS | 12 |
| | 2A612800 | | COVER,PLATEN | 28 |
| | 2A612810 | | MAT,ORIG NAL HOLDER | 28 |
| | 2A612820 | | HINGE,ORIGINAL HOLDER | 28 |
| | 2A627240 | | SHIELD 5X1X30,GASKET | 25 |
| ⊙ | 2AR07220 | | PULLEY,PAPER FEED | 6 |
| ⊙ | 2AR07230 | | PULLEY,SEPARATION | 6,20 |
| | 2AR07660 | | GUIDE FILM,SEPARATION PULLEY | 6 |
| | 2AR27800 | | POWER CORD(230) | 24 |
| | 2AV12280 | | BASE RUBBER,SCANNER SECTION | 11 |
| | 2AV27440 | | CORE 15-26X13 | 26 |
| | 2BC06510 | | BUSHING 8 | 16,17 |
| | 2BC06520 | | BUSHING 6,REGISTRATION | 6 |
| ⊙ | 2BC06750 | | RACK,CURSOR | 21 |
| | 2BC06910 | | STOPPER 6 | 7,11,16 |
| | 2BC06980 | | STOPPER 5 | 2,16,17 |
| ⊙ | 2BC07050 | | PULLEY,LIFT WIRE | 11 |
| | 2BC07340 | | LEFT W RE B,LIFT | 21 |
| ⊙ | 2BC07860 | | TERMINAL,PAPER SIZE DETECTION | 4,5,21 |
| | 2BC12190 | | SPR NG,MIRROR HOLDER | 11 |
| | 2BG02410 | | SCREW A | 3 |
| | 2BG06480 | | BAND B | 1 |
| | 2BG06500 | | SPONGE WIRE A | 7 |
| | 2BG16590 | | FELT TC CLN | 2 |
| ⊙ | 2BG20320 | | PULLEY EXIT | 19 |
| | 2BG22530 | | SPR NG COUPLING DLP | 16 |
| | 2BG22950 | | BUSH 8 EW | 7 |
| | 2BG22960 | | BUSH 6 | 7,10,16,17,20, 22 |
| | 2BG22970 | | BUSH 6 EW | 7,9,20,22 |
| | 2BG22980 | | BUSH 8 | 17 |
| | 2BG22990 | | CUT WASHER 4 | 1,7,9,11,22 |
| | 2BJ02110 | | FULCRUM PLATE,M DDLE TRAY | 3 |
| | 2BJ02121 | | HOLDER,FULCRUM | 3 |
| | 2BJ04031 | | REAR COVER TRAY | 1 |
| | 2BJ04220 | | GROUND PLATE LCD A | 27 |
| | 2BJ04240 | | GROUND PLATE LCD C | 27 |
| ⊙ | 2BJ06010 | | PULLEY FEED A | 6 |
| ⊙ | 2BJ25020 | | KEY OPERATION 10 | 27 |
| | 2BJ25240 | | BARRIER TABLET | 27 |

| | Part.No. | Alternative. | Description | Fig.No. |
|---|---|---|---|---|
| | 2BJ25250 | | VOLUME OPE UNIT | 27 |
| | 2BJ25270 | | SPONGE LCD A | 27 |
| | 2BJ25280 | | SPONGE LCD B | 27 |
| | 2BJ25400 | | SHEET LCD A | 27 |
| | 2BJ60530 | | LOWER W NG TRAY | 29 |
| ⊙ | 2BL04310 | | PLATE NUMBER | 4,5 |
| ⊙ | 2BL04370 | | PLATE NUMBER 2 | 5 |
| | 2BL07900 | | PLATE LEAD NG FEED | 6 |
| | 2BL16220 | 5AAVBRUSH036 | BRUSH CLEANER | 1 |
| ⊙ | 2C901060 | | PCB EJECT SW ASSY | 19 |
| | 2C904550 | | CUT WASHER 5 | 4,5 |
| ⊙ | 2C907280 | | TORQUE LIMITER 340 | 20 |
| | 2C912150 | | RETAINER WIRE | 11 |
| | 2C912340 | | DRUM PULLEY | 11 |
| | 2C912430 | | LID KMAS | 1 |
| | 2C912630 | | STOPPER RELEASE SWITCH | 28 |
| | 2C916180 | | GEAR Z15 REGIST | 10 |
| | 2C921180 | | ARM LINK | 19 |
| ⊙ | 2C927090 | | SENSOR ORIGINAL | 11 |
| ⊙ | 2C927210 | | SENSOR 248NL1 | 7,9,11,19,20 |
| ⊙ | 2CX82010 | | SET,PLATEN COVER TYPE D | 28 |
| | 2DA26520 | | GUIDE CF | 26 |
| | 2DC12230 | | SL DER SCANNER | 11 |
| | 2DD26070 | | PLATE OPTION | 26 |
| | 2FB07050 | | PIN CURSOR | 4,5 |
| | 2FB07060 | | SPRING CURSOR | 4,5 |
| | 2FB07330 | | STOPPER BYPASS TABLE | 21 |
| ⊙ | 2FB12140 | | MIRROR A | 11 |
| ⊙ | 2FB24150 | | KEY FUNCTION J | 27 |
| ⊙ | 2FB27060 | | SENSOR HUM DITY | 1 |
| ⊙ | 2FB27180 | | FAN 80 COOLING | 18 |
| ⊙ | 2FB27190 | | FAN 60 COOLING | 18,24 |
| ⊙ | 2FB28190 | | LCD PWB | 27 |
| ⊙ | 2FG01020 | | SIZE DETECTION ASS'Y | 4,5,21 |
| | 2FG04020 | | COVER TOTAL COUNTER | 12 |
| | 2FG20310 | | BEARING PRESS ROLLER | 16 |
| | 3019527401 | 19527401 | POWER CORD(120) | 24 |
| | 3029236241 | 29236241 | SOCKET ASS'Y,KEY COUNTER | 29 |
| | 3029927232 | 29927232 | POWER CODE AS(240) | 24 |
| ⊙ | 302A369707 | 2A369707 | SET PARTS KEYCOUNTER NEW COLOR | 29 |
| | 302AR07041 | 2AR07041 | SHAFT,WORK PLATE | 4,5 |
| | 302AR07251 | 2AR07251 | SHAFT,PAPER FEED | 6 |
| | 302AR07271 | 2AR07271 | SHAFT,LEADING FEED | 6 |
| | 302BC06091 | 2BC06091 | WORK PLATE,LIFT CASSETTE | 4,5 |
| | 302BC43134 | 2BC43134 | TABLE A,BYPASS(G E) | 21 |
| | 302BC43146 | 2BC43146 | TABLE B,BYPASS(G E) | 21 |
| | 302BC43152 | 2BC43152 | TABLE C,BYPASS(G E) | 21 |
| | 302BC43161 | 2BC43161 | TABLE D,BYPASS(G E) | 21 |
| | 302BG04560 | 2BG04560 | COVER SCREW | 12 |
| | 302BG06152 | 2BG06152 | SHAFT FEED B | 1 |

• Parts with "⊙" indicate regular maintenance parts.

| | Part.No. | Alterna ive. | Description | Fig.No. |
|---|---|---|---|---|
| | 302BG06162 | 2BG06162 | PULLEY FEED | 1 |
| | 302BG22021 | 2BG22021 | SPR NG JO NT D | 16 |
| ⊙ | 302BJ25041 | 2BJ25041 | KEY STOP | 27 |
| ⊙ | 302BJ25051 | 2BJ25051 | KEY RESET | 27 |
| ⊙ | 302BJ25061 | 2BJ25061 | KEY SAVER | 27 |
| ⊙ | 302BJ25071 | 2BJ25071 | KEY INTERRUPT | 27 |
| ⊙ | 302BJ25081 | 2BJ25081 | KEY CONTROL | 27 |
| | 302BJ60521 | 2BJ60521 | UPPER WING TRAY | 29 |
| | 302BJ60541 | 2BJ60541 | RAIL WING TRAY | 29 |
| | 302BL26211 | 2BL26211 | RAIL OPTION A /B-05 CONT BOX A2 | 26 |
| | 302C912291 | 2C912291 | SPR NG SCANNER TENSION | 11 |
| | 302DC05120 | 2DC05120 | LABEL CAUTION HG | 1 |
| ⊙ | 302FB05200 | 2FB05200 | PLATE SIZE C | 4,5 |
| ⊙ | 302FB05210 | 2FB05210 | PLATE SIZE N | 4,5 |
| ⊙ | 302FB05380 | 2FB05380 | LABEL VFEED CAUTION | 9 |
| ⊙ | 302FB05440 | 2FB05440 | LABEL VFEED CAUTION 6NATIONS | 9 |
| | 302FB06151 | 2FB06151 | JOINT DRIVE | 20 |
| | 302FB07032 | 2FB07032 | LEVER CURSOR A | 4,5 |
| | 302FB07042 | 2FB07042 | LEVER CURSOR B | 4,5 |
| | 302FB07340 | 2FB07340 | ADJUSTING PLATE CASSETTE | 4,5 |
| | 302FB07420 | 2FB07420 | PIN CASSETTE | 4,5 |
| | 302FB09320 | 2FB09320 | GROUND PLATE DECK UNIT | 27 |
| | 302FB16320 | 2FB16320 | PIN ROLLER RELEASE LEVER | 11 |
| | 302FB17700 | 2FB17700 | SPR NG BYPASS TEBLE | 21 |
| ⊙ | 302FB17710 | 2FB17710 | GEAR 18 IDLE DEVELOPING | 21 |
| | 302FB17720 | 2FB17720 | SPONGE BYPASS TABLE | 21 |
| | 302FB17730 | 2FB17730 | SEAL BYPASS TABLE | 21 |
| ⊙ | 302FB17740 | 2FB17740 | SIZE INDICATOR BYPASS(M) | 21 |
| ⊙ | 302FB17750 | 2FB17750 | SIZE INDICATOR BYPASS(I) | 21 |
| ⊙ | 302FB17760 | 2FB17760 | PAD MP | 20 |
| | 302FB17800 | 2FB17800 | PIN BYPASS TABLE | 21 |
| ⊙ | 302FB24061 | 2FB24061 | KEY POWER SUPPLY | 27 |
| ⊙ | 302FB24200 | 2FB24200 | KEY PR NT | 27 |
| | 302FB24250 | 2FB24250 | RETAINER LCD | 27 |
| ⊙ | 302FB25140 | 2FB25140 | SWITCH BYPASS SIZE | 21 |
| ⊙ | 302FB25180 | 2FB25180 | SOLENOID LEADING FEED | 20 |
| | 302FB25190 | 2FB25190 | TABLET OPERATION | 27 |
| | 302FB26290 | 2FB26290 | LID VENDOR | 24 |
| | 302FG07091 | 2FG07091 | BASE CASSETTE | 4,5 |
| ⊙ | 302FG07151 | 2FG07151 | CURSOR C CASSETTE | 5 |
| ⊙ | 302FG07170 | 2FG07170 | FRONT GU DE C,CURSOR | 5 |
| ⊙ | 302FG07180 | 2FG07180 | REAR GUIDE C,CURSOR | 5 |
| | 302FG07200 | 2FG07200 | GROUND PLATE,CASSETTE | 4,5 |
| ⊙ | 302FG07230 | 2FG07230 | STOPPER,TRAILING EDGE DETECTION | 5 |
| | 302FG07251 | 2FG07251 | UPPER HOUSING,PAPER FEED | 6 |
| | 302FG07260 | 2FG07260 | LOWER HOUS NG,PAPER FEED | 6 |
| | 302FG07290 | 2FG07290 | ACTUATOR,PAPER EMPTY | 6 |
| | 302FG07300 | 2FG07300 | HOLDER,ACTUATOR | 6 |
| | 302FG07310 | 2FG07310 | RE NFORCEMENT PRIMARY PAPER FEED | 6 |
| | 302FG07330 | 2FG07330 | GROUND PLATE,PRIMARY PAPER FEED | 6 |

| | Part.No. | Alternative. | Description | Fig.No. |
|---|---|---|---|---|
| ⊙ | 302FZ00440 | 2FZ00440 | COVER INNER LEFT ASS'Y | 1 |
| ⊙ | 302FZ00450 | 2FZ00450 | COVER LEFT REAR ASS'Y | 1 |
| ⊙ | 302FZ00460 | 2FZ00460 | COVER LEFT FRONT ASS'Y | 1 |
| ⊙ | 302FZ00470 | 2FZ00470 | COVER FILTER ASS'Y | 1 |
| ⊙ | 302FZ00531 | 2FZ00531 | RETAINER PU ASS'Y | 2 |
| | 302FZ00700 | 2FZ00700 | WASTE BOTTLE ASS'Y | 10 |
| ⊙ | 302FZ01050 | 2FZ01050 | PR NTED W.BOARD SHD | 11 |
| ⊙ | 302FZ01060 | 2FZ01060 | PRINTED W.BOARD SCANNER ASSY | 11 |
| ⊙ | 302FZ01080 | 2FZ01080 | PR NTED W.BOARD PANEL A | 27 |
| ⊙ | 302FZ01090 | 2FZ01090 | PR NTED W.BOARD PANEL B | 27 |
| ⊙ | 302FZ01220 | 2FZ01220 | PRINTED W.BOARD DIMM IPU U ASSY | 25 |
| ⊙ | 302FZ01230 | 2FZ01230 | PRINTED W.BOARD DIMM IPU E ASSY | 25 |
| ⊙ | 302FZ01280 | 2FZ01280 | PRINTED W.BOARD TONER FULL ASSY | 2 |
| ⊙ | 302FZ01300 | 2FZ01300 | PR NTED W.BOARD FAN | 8 |
| ⊙ | 302FZ01310 | 2FZ01310 | VARISTOR TC ASS'Y | 8 |
| ⊙ | 302FZ01340 | 2FZ01340 | PRINTED W.BOARD DIMM IPU TW ASSY | 25 |
| | 302FZ02120 | 2FZ02120 | RETAINER PU | 2 |
| | 302FZ02150 | 2FZ02150 | RA L MAGE FRONT | 2 |
| | 302FZ02160 | 2FZ02160 | RA L MAGE REAR | 2 |
| | 302FZ02170 | 2FZ02170 | RA L DRUM LEFT | 2 |
| | 302FZ02190 | 2FZ02190 | SHUTTER ID SENSOR | 2 |
| | 302FZ02200 | 2FZ02200 | SPRING SHUTTER ID SENSOR | 2 |
| | 302FZ02250 | 2FZ02250 | FRAME FUSER UNIT CENTER | 3 |
| | 302FZ02260 | 2FZ02260 | FRAME FUSER UNIT FRONT | 3 |
| | 302FZ02270 | 2FZ02270 | FRAME FUSER UNIT REAR | 3 |
| | 302FZ02280 | 2FZ02280 | STOPPER MAGE UNIT F | 2 |
| | 302FZ02291 | 2FZ02291 | STOPPER MAGE UNIT R | 2 |
| | 302FZ02300 | 2FZ02300 | SPRING STOPPER | 2 |
| | 302FZ02320 | 2FZ02320 | STAY UPPER LEFT | 3 |
| | 302FZ02341 | 2FZ02341 | STAY UPPER REAR | 3 |
| | 302FZ02360 | 2FZ02360 | STAY ISU UPPER RIGHT | 3 |
| | 302FZ02380 | 2FZ02380 | STAY ISU M DDLE RIGHT | 3 |
| | 302FZ02390 | 2FZ02390 | SPACER ISU | 11 |
| | 302FZ02410 | 2FZ02410 | LEVER RETA NER | 2 |
| | 302FZ02420 | 2FZ02420 | SPRING RETAINER | 2 |
| | 302FZ02450 | 2FZ02450 | STOPPER CONTAINER CB | 2 |
| | 302FZ02460 | 2FZ02460 | STOPPER CONTAINER BK CB | 2 |
| | 302FZ02470 | 2FZ02470 | STOPPER CONTAINER CC | 2 |
| | 302FZ02480 | 2FZ02480 | STOPPER CONTAINER BK CC | 2 |
| | 302FZ02510 | 2FZ02510 | SPRING EARTH EXIT | 3 |
| | 302FZ02540 | 2FZ02540 | MOUNT LSU RIGHT | 12 |
| ⊙ | 302FZ02591 | 2FZ02591 | HOOK DLP | 2 |
| | 302FZ02610 | 2FZ02610 | MOUNT CASSETTE SW | 23 |
| | 302FZ02640 | 2FZ02640 | MOUNT FAN | 18 |
| ⊙ | 302FZ02671 | 2FZ02671 | CAM SHAFT BLADE | 7 |
| | 302FZ02682 | 2FZ02682 | SHAFT CLN LSU | 7 |
| | 302FZ02690 | 2FZ02690 | MOUNT SOLENOID | 7 |
| | 302FZ02700 | 2FZ02700 | MOUNT SHAFT CAM | 7 |
| | 302FZ02710 | 2FZ02710 | GUIDE TC R | 2 |
| | 302FZ02720 | 2FZ02720 | PLATE FUSER | 3 |

• Parts with "⊙" indicate regular maintenance parts.

| | Part.No. | Alterna ive. | Description | Fig.No. |
|---|---|---|---|---|
| | 302FZ02741 | 2FZ02741 | CLUTCH LSU CLEANING | 7 |
| | 302FZ02770 | 2FZ02770 | PLATE ID SENSOR | 2 |
| | 302FZ02780 | 2FZ02780 | SHEET ID SENSOR | 2 |
| | 302FZ02790 | 2FZ02790 | MOUNT ISU ADJUST | 3 |
| | 302FZ02810 | 2FZ02810 | SHAFT SWEEP DRIVE | 2 |
| ⊙ | 302FZ02820 | 2FZ02820 | GEAR SWEEP Z15 | 2 |
| ⊙ | 302FZ02830 | 2FZ02830 | GEAR SWEEP Z23 | 2 |
| ⊙ | 302FZ02840 | 2FZ02840 | GEAR SWEEP Z49 Z24 | 2 |
| ⊙ | 302FZ02850 | 2FZ02850 | GEAR SWEEP Z28 | 2 |
| | 302FZ02860 | 2FZ02860 | SHAFT FEED SWEEP | 2 |
| ⊙ | 302FZ02870 | 2FZ02870 | GEAR SWEEP Z20 | 2 |
| | 302FZ02880 | 2FZ02880 | BRACKET PWB RF D | 18 |
| | 302FZ02900 | 2FZ02900 | PLATE DRUM EARTH | 2 |
| | 302FZ02910 | 2FZ02910 | TAPE RETA NER | 2 |
| ⊙ | 302FZ02920 | 2FZ02920 | SHEET TRAY CL | 2 |
| ⊙ | 302FZ02930 | 2FZ02930 | SHEET TRAY BK | 2 |
| | 302FZ02970 | 2FZ02970 | MOUNT FRONT SIDE TOP | 3 |
| ⊙ | 302FZ03010 | 2FZ03010 | MOUNT KEY COUNTER | 29 |
| | 302FZ03020 | 2FZ03020 | SHEET BAND TUBE | 12 |
| | 302FZ03070 | 2FZ03070 | RETAINING PIN DRAWER | 23 |
| | 302FZ04010 | 2FZ04010 | COVER FRONT | 1 |
| ⊙ | 302FZ04040 | 2FZ04040 | COVER TOP | 1 |
| ⊙ | 302FZ04060 | 2FZ04060 | COVER RIGHT | 1 |
| ⊙ | 302FZ04071 | 2FZ04071 | COVER RIGHT MID A | 1 |
| ⊙ | 302FZ04081 | 2FZ04081 | COVER RIGHT MID B | 12 |
| ⊙ | 302FZ04090 | 2FZ04090 | COVER CASSETTE | 4 |
| ⊙ | 302FZ04110 | 2FZ04110 | COVER FRONT SIDE LOW | 1 |
| ⊙ | 302FZ04120 | 2FZ04120 | COVER FRONT SIDE MID | 1 |
| ⊙ | 302FZ04130 | 2FZ04130 | COVER FRONT SIDE TOP | 3 |
| ⊙ | 302FZ04140 | 2FZ04140 | COVER EXIT FRONT | 3 |
| ⊙ | 302FZ04150 | 2FZ04150 | COVER LEFT FRONT | 1 |
| ⊙ | 302FZ04160 | 2FZ04160 | COVER LEFT REAR | 1 |
| ⊙ | 302FZ04170 | 2FZ04170 | COVER LEFT MID | 1 |
| ⊙ | 302FZ04180 | 2FZ04180 | COVER EXIT TOP | 1 |
| ⊙ | 302FZ04190 | 2FZ04190 | COVER RIGHT TRAY | 1 |
| ⊙ | 302FZ04200 | 2FZ04200 | COVER  NNER RIGHT | 1 |
| ⊙ | 302FZ04210 | 2FZ04210 | COVER  NNER LEFT | 1 |
| | 302FZ04231 | 2FZ04231 | COVER REAR | 1 |
| ⊙ | 302FZ04240 | 2FZ04240 | LID COVER LEFT | 1 |
| ⊙ | 302FZ04250 | 2FZ04250 | PLATE MAGNET | 1 |
| ⊙ | 302FZ04302 | 2FZ04302 | COVER LEFT | 9 |
| | 302FZ04310 | 2FZ04310 | SHAFT LEFT COVER | 9 |
| ⊙ | 302FZ04321 | 2FZ04321 | LEVER LEFT COVER | 9 |
| | 302FZ04330 | 2FZ04330 | SHAFT HOOK | 9 |
| ⊙ | 302FZ04350 | 2FZ04350 | COVER FEED LOW | 1 |
| | 302FZ04360 | 2FZ04360 | PLATE LEFT COVER F | 9 |
| | 302FZ04370 | 2FZ04370 | PLATE LEFT COVER R | 9 |
| | 302FZ04390 | 2FZ04390 | SPR NG LEFT COVER F | 9 |
| | 302FZ04400 | 2FZ04400 | SPR NG LEFT COVER R | 9 |
| | 302FZ04420 | 2FZ04420 | SHAFT LEFT COVER B | 9 |

| | Part.No. | Alternative. | Description | Fig.No. |
|---|---|---|---|---|
| ⊙ | 302FZ04430 | 2FZ04430 | COVER LEFT FRONT TOP | 1 |
| ⊙ | 302FZ04440 | 2FZ04440 | COVER LEFT REAR TOP | 1 |
| ⊙ | 302FZ04450 | 2FZ04450 | CLIP DISH | 3 |
| | 302FZ04460 | 2FZ04460 | COVER REAR OP | 25 |
| | 302FZ04470 | 2FZ04470 | COVER FILTER | 1 |
| | 302FZ04490 | 2FZ04490 | STRAP COVER FRONT | 1 |
| | 302FZ04500 | 2FZ04500 | F LTER DUST | 1 |
| | 302FZ04510 | 2FZ04510 | COVER INNER M DDLE | 2 |
| ⊙ | 302FZ04520 | 2FZ04520 | COVER INNER UPPER | 18 |
| ⊙ | 302FZ04530 | 2FZ04530 | LEVER LOCK CONT | 18 |
| ⊙ | 302FZ04540 | 2FZ04540 | TRAY CONTAINER Y | 2 |
| ⊙ | 302FZ04550 | 2FZ04550 | TRAY CONTA NER BK | 2 |
| | 302FZ04571 | 2FZ04571 | COVER FULL SENSOR | 2 |
| ⊙ | 302FZ04580 | 2FZ04580 | COVER CONNECTER | 18 |
| ⊙ | 302FZ04590 | 2FZ04590 | TRAY CONTAINER M | 2 |
| ⊙ | 302FZ04600 | 2FZ04600 | TRAY CONTAINER C | 2 |
| | 302FZ04630 | 2FZ04630 | COVER MAIN SW | 1 |
| | 302FZ04640 | 2FZ04640 | SHEET HARNESS LEFT | 1 |
| | 302FZ04650 | 2FZ04650 | COVER RMB SUB | 12 |
| | 302FZ04710 | 2FZ04710 | CUSHION COVER FRONT | 1 |
| | 302FZ04730 | 2FZ04730 | SPACER SENSOR | 1 |
| | 302FZ04761 | 2FZ04761 | SPRING FEED LOW | 1 |
| | 302FZ04780 | 2FZ04780 | LEVER LOCK WASTE | 2 |
| | 302FZ04790 | 2FZ04790 | SPRING LOCK WASTE | 2 |
| ⊙ | 302FZ04800 | 2FZ04800 | HOOK LEFT COVER F | 9 |
| ⊙ | 302FZ04810 | 2FZ04810 | HOOK LEFT COVER R | 9 |
| | 302FZ04830 | 2FZ04830 | PLATE COVER LEFT M D | 1 |
| | 302FZ04881 | 2FZ04881 | COVER REAR MOTOR | 1 |
| ⊙ | 302FZ04890 | 2FZ04890 | SEAL TRAY BK | 2 |
| ⊙ | 302FZ04900 | 2FZ04900 | SEAL TRAY Y | 2 |
| ⊙ | 302FZ04910 | 2FZ04910 | SEAL TRAY C | 2 |
| ⊙ | 302FZ04920 | 2FZ04920 | SEAL TRAY M | 2 |
| | 302FZ04940 | 2FZ04940 | TRAY WASTE | 2 |
| | 302FZ04950 | 2FZ04950 | SPONGE TRAY WASTE | 2 |
| | 302FZ04970 | 2FZ04970 | PLATE LEFT COVER C | 9 |
| | 302FZ04980 | 2FZ04980 | PLATE LEFT COVER D | 9 |
| | 302FZ04990 | 2FZ04990 | BAND LEFT COVER | 9 |
| ⊙ | 302FZ05010 | 2FZ05010 | COVER OPERATION | 27 |
| ⊙ | 302FZ05020 | 2FZ05020 | KEY INIT | 27 |
| ⊙ | 302FZ05030 | 2FZ05030 | LEFT KEY FUNCTION | 27 |
| ⊙ | 302FZ05040 | 2FZ05040 | LENS LED FUNCTION | 27 |
| ⊙ | 302FZ05050 | 2FZ05050 | KEY COLOR | 27 |
| | 302FZ05060 | 2FZ05060 | SHEET TABLET | 27 |
| | 302FZ05070 | 2FZ05070 | RIGHT DUST SHIELD | 27 |
| | 302FZ05080 | 2FZ05080 | SHEET OPERATION PWB | 27 |
| | 302FZ05090 | 2FZ05090 | CENTER DUST SHIELD | 27 |
| | 302FZ05100 | 2FZ05100 | LEFT DUST SH ELD | 27 |
| | 302FZ05110 | 2FZ05110 | SH ELD BASE OPERATION | 27 |
| | 302FZ05190 | 2FZ05190 | SPRING EARTH KEYTOP | 27 |
| ⊙ | 302FZ05200 | 2FZ05200 | LENS LED FUNCTION KEY | 27 |

• Parts with "⊙" indicate regular maintenance parts.

| | Part.No. | Alterna ive. | Description | Fig.No. |
|---|---|---|---|---|
| ⊙ | 302FZ05240 | 2FZ05240 | COVER OPERATION B | 27 |
| ⊙ | 302FZ05250 | 2FZ05250 | LABEL START E | 27 |
| ⊙ | 302FZ05260 | 2FZ05260 | LABEL COLOR E | 27 |
| ⊙ | 302FZ05270 | 2FZ05270 | LABEL APPLICATION E | 27 |
| ⊙ | 302FZ05280 | 2FZ05280 | LABEL SYSTEM MENU E | 27 |
| ⊙ | 302FZ05290 | 2FZ05290 | LABEL FUNCTION E | 27 |
| ⊙ | 302FZ05300 | 2FZ05300 | LABEL OPE COVER E | 27 |
| | 302FZ05320 | 2FZ05320 | SPACER START KEY | 27 |
| | 302FZ05400 | 2FZ05400 | SPACER COVER OPE A | 27 |
| ⊙ | 302FZ05410 | 2FZ05410 | LABEL START TW | 27 |
| ⊙ | 302FZ05420 | 2FZ05420 | LABEL COLOR TW | 27 |
| ⊙ | 302FZ05430 | 2FZ05430 | LABEL APPLICATION TW | 27 |
| ⊙ | 302FZ05440 | 2FZ05440 | LABEL SYSTEM MENU TW | 27 |
| ⊙ | 302FZ05450 | 2FZ05450 | LABEL FUNCTION TW | 27 |
| ⊙ | 302FZ05460 | 2FZ05460 | LABEL OPE COVER TW | 27 |
| | 302FZ05470 | 2FZ05470 | LABEL OPE A | 27 |
| | 302FZ05480 | 2FZ05480 | LABEL OPE B | 27 |
| ⊙ | 302FZ05550 | 2FZ05550 | SHEET OPERATION W RE | 27 |
| ⊙ | 302FZ07020 | 2FZ07020 | PULLEY MPT BYPASS | 22 |
| | 302FZ07042 | 2FZ07042 | BASE MPT BYPASS | 22 |
| | 302FZ07051 | 2FZ07051 | COVER MPT BYPASS | 22 |
| | 302FZ07061 | 2FZ07061 | GUIDE BYPASS RIGHT | 22 |
| | 302FZ07070 | 2FZ07070 | COVER BYPASS OUT | 22 |
| ⊙ | 302FZ07080 | 2FZ07080 | PULLEY BYPASS | 22 |
| ⊙ | 302FZ07090 | 2FZ07090 | BELT BYPASS | 22 |
| ⊙ | 302FZ07100 | 2FZ07100 | GEAR BYPASS A | 22 |
| | 302FZ07110 | 2FZ07110 | SPR NG BYPASS PULLEY | 22 |
| ⊙ | 302FZ07120 | 2FZ07120 | GEAR BYPASS JO NT | 22 |
| | 302FZ07130 | 2FZ07130 | SPR NG BYPASS MOTION | 22 |
| | 302FZ07140 | 2FZ07140 | COVER MPT REAR | 22 |
| ⊙ | 302FZ07150 | 2FZ07150 | PULLEY TENSION BELT | 22 |
| | 302FZ07180 | 2FZ07180 | PLATE EARTH MPT | 22 |
| | 302FZ07190 | 2FZ07190 | SPR NG EARTH BYPASS | 22 |
| | 302FZ07210 | 2FZ07210 | SPR NG EARTH BYPASS JOINT | 22 |
| | 302FZ07231 | 2FZ07231 | GUIDE BYPASS N | 22 |
| | 302FZ07240 | 2FZ07240 | SLIDER BYPASS A | 22 |
| | 302FZ07250 | 2FZ07250 | SLIDER BYPASS B | 22 |
| | 302FZ07301 | 2FZ07301 | PLATE GUIDE MPT | 22 |
| | 302FZ07310 | 2FZ07310 | BUSH CONTACT MPT B | 22 |
| | 302FZ07320 | 2FZ07320 | SPR NG EARTH MPT A | 22 |
| | 302FZ07330 | 2FZ07330 | SPR NG EARTH MPT B | 22 |
| ⊙ | 302FZ07340 | 2FZ07340 | LABEL JAM BYPASS B1 | 7 |
| | 302FZ07350 | 2FZ07350 | LABEL JAM BYPASS B2 | 22 |
| | 302FZ07360 | 2FZ07360 | LABEL JAM BYPASS B3 | 22 |
| | 302FZ07380 | 2FZ07380 | SPR NG BYPASS PULLEY B | 22 |
| ⊙ | 302FZ07390 | 2FZ07390 | ROLLER BYPASS C | 22 |
| | 302FZ07400 | 2FZ07400 | LEVER JAM BYPASS | 22 |
| | 302FZ07410 | 2FZ07410 | MOUNT LEVER BYPASS | 22 |
| | 302FZ07420 | 2FZ07420 | LABEL JAM BYPASS B4 | 22 |
| | 302FZ07500 | 2FZ07500 | BRACKET MPT GEAR | 2 |

| | Part.No. | Alternative. | Description | Fig.No. |
|---|---|---|---|---|
| ⊙ | 302FZ07510 | 2FZ07510 | GEAR JOINT MPT | 2 |
| | 302FZ07540 | 2FZ07540 | HOLDER SHAFT OUT | 22 |
| | 302FZ07550 | 2FZ07550 | SHEET BYPASS OUT | 22 |
| | 302FZ08011 | 2FZ08011 | BASE MPT | 20 |
| | 302FZ08020 | 2FZ08020 | LOWER GUIDE MPT | 20 |
| | 302FZ08030 | 2FZ08030 | SHAFT FEED MPT | 20 |
| | 302FZ08040 | 2FZ08040 | SHAFT FEED JOINT MPT | 20 |
| | 302FZ08050 | 2FZ08050 | SHAFT SEPARATE MPT | 20 |
| | 302FZ08070 | 2FZ08070 | HOLDER MPT LF | 20 |
| | 302FZ08090 | 2FZ08090 | PAPER STOPPER MPT F | 20 |
| | 302FZ08100 | 2FZ08100 | PAPER STOPPER MPT R | 20 |
| | 302FZ08110 | 2FZ08110 | LEVER STOPPER RELEASE | 20 |
| | 302FZ08120 | 2FZ08120 | SPRING SEPARATE PULLEY | 20 |
| ⊙ | 302FZ08130 | 2FZ08130 | PULLEY LEADING FEED MPT | 20 |
| | 302FZ08160 | 2FZ08160 | HOLDER SEPARATE MPT | 20 |
| ⊙ | 302FZ08180 | 2FZ08180 | GEAR MPT Z23 | 20 |
| | 302FZ08190 | 2FZ08190 | SPRING HOLDER MPT | 20 |
| | 302FZ08291 | 2FZ08291 | SPRING MID MPT | 20 |
| ⊙ | 302FZ08300 | 2FZ08300 | GEAR MPT Z41Z35 | 20 |
| ⊙ | 302FZ08310 | 2FZ08310 | ACTUATOR MIDDLE MPT | 20 |
| | 302FZ08320 | 2FZ08320 | LEVER MPT SOLENOID | 20 |
| ⊙ | 302FZ08330 | 2FZ08330 | CURSOR MPT F | 21 |
| ⊙ | 302FZ08340 | 2FZ08340 | CURSOR MPT R | 21 |
| | 302FZ08350 | 2FZ08350 | SPRING ACTUATOR MPT | 20 |
| | 302FZ08360 | 2FZ08360 | COVER MPT DRIVE | 20 |
| ⊙ | 302FZ08370 | 2FZ08370 | GEAR JO NT MPT UNIT | 20 |
| | 302FZ08430 | 2FZ08430 | SPRING SOLENOID MPT | 20 |
| | 302FZ08440 | 2FZ08440 | PLATE EARTH MPT ROLL | 20 |
| ⊙ | 302FZ08450 | 2FZ08450 | GEAR MPT FEED Z19 ASSY | 20 |
| | 302FZ08460 | 2FZ08460 | PAD WIRE | 20 |
| | 302FZ08480 | 2FZ08480 | LABEL MP CAUTION J V | 21 |
| | 302FZ08490 | 2FZ08490 | LABEL MP CAUTION E V | 21 |
| ⊙ | 302FZ08500 | 2FZ08500 | PAD MP L | 21 |
| | 302FZ08510 | 2FZ08510 | LABEL MP CAUTION 3 V | 21 |
| | 302FZ08520 | 2FZ08520 | LABEL MP CAUTION 6 V | 21 |
| | 302FZ08530 | 2FZ08530 | LABEL MP CAUTION TW V | 21 |
| | 302FZ08540 | 2FZ08540 | LABEL MP CAUTION KS V | 21 |
| | 302FZ08560 | 2FZ08560 | LABEL MP CAUTION PIC V | 21 |
| | 302FZ09011 | 2FZ09011 | CASSETTE | 4 |
| ⊙ | 302FZ09030 | 2FZ09030 | CURSOR RIGHT | 4 |
| ⊙ | 302FZ09040 | 2FZ09040 | CURSOR RIGHT UPPER | 4 |
| | 302FZ09070 | 2FZ09070 | SHAFT HANDLE | 4 |
| | 302FZ09090 | 2FZ09090 | LABEL CASSETTE OPERATION 1 | 4 |
| ⊙ | 302FZ09101 | 2FZ09101 | LABEL BYPASS OPERATION | 4 |
| | 302FZ09111 | 2FZ09111 | LABEL CURSOR OPERATION | 4 |
| ⊙ | 302FZ09120 | 2FZ09120 | SPONGE FRONT | 4 |
| ⊙ | 302FZ09130 | 2FZ09130 | LABEL PAPER MAX | 4 |
| ⊙ | 302FZ09141 | 2FZ09141 | LABEL PAPER SIZE R1 | 4 |
| ⊙ | 302FZ09150 | 2FZ09150 | LABEL PAPER UPPER L MIT | 4 |
| ⊙ | 302FZ14161 | 2FZ14161 | GEAR MAG Z14H | 14 |

• Parts with "⊙" indicate regular maintenance parts.

| | Part.No. | Alterna ive. | Description | Fig.No. |
|---|---|---|---|---|
| ⊙ | 302FZ14170 | 2FZ14170 | GEAR IDLE Z15H DLP | 14 |
| ⊙ | 302FZ14180 | 2FZ14180 | GEAR SLEEVE Z17H | 14 |
| ⊙ | 302FZ14230 | 2FZ14230 | GEAR Z14S | 14 |
| | 302FZ14300 | 2FZ14300 | COVER FRONT DLP | 14 |
| | 302FZ14310 | 2FZ14310 | COVER REAR BK DLP | 14 |
| | 302FZ14420 | 2FZ14420 | COVER REAR Y DLP | 14 |
| | 302FZ14430 | 2FZ14430 | COVER REAR C DLP | 14 |
| | 302FZ14440 | 2FZ14440 | COVER REAR M DLP | 14 |
| | 302FZ14840 | 2FZ14840 | STUD SCREW M4 | 14 |
| ⊙ | 302FZ17010 | 2FZ17010 | PULLEY SCANNER 41/26 | 11 |
| ⊙ | 302FZ17020 | 2FZ17020 | PULLEY SCANNER 50 | 11 |
| | 302FZ17030 | 2FZ17030 | MOUNT SCANNER DRIVE | 11 |
| ⊙ | 302FZ17040 | 2FZ17040 | BELT SCANNER | 11 |
| | 302FZ17050 | 2FZ17050 | SEAL FRAME E | 12 |
| | 302FZ20030 | 2FZ20030 | PIN LSU | 12 |
| | 302FZ20040 | 2FZ20040 | SPR NG LSU | 12 |
| | 302FZ21242 | 2FZ21242 | GUIDE BELT UP | 10 |
| | 302FZ21300 | 2FZ21300 | BEARING 688AZZ | 7 |
| | 302FZ21700 | 2FZ21700 | HOLDER GUIDE PULLEY | 10 |
| | 302FZ22012 | 2FZ22012 | BASE CONVEY NG | 8 |
| ⊙ | 302FZ22040 | 2FZ22040 | ROLLER REGIST R | 7 |
| ⊙ | 302FZ22060 | 2FZ22060 | GUIDE M DDLE R | 7 |
| | 302FZ22071 | 2FZ22071 | GUIDE CONVEYING | 8 |
| ⊙ | 302FZ22084 | 2FZ22084 | GUIDE FEED R | 7 |
| ⊙ | 302FZ22090 | 2FZ22090 | GUIDE TC L | 8 |
| ⊙ | 302FZ22110 | 2FZ22110 | GEAR TC Z24H | 8 |
| ⊙ | 302FZ22120 | 2FZ22120 | GEAR REGIST Z18H | 7 |
| ⊙ | 302FZ22130 | 2FZ22130 | GEAR REGIST Z22H | 8 |
| | 302FZ22140 | 2FZ22140 | SHAFT MIDDLE L | 7,8,9,19,20 |
| ⊙ | 302FZ22150 | 2FZ22150 | PULLEY M DDLE | 7,8,9,19,20 |
| ⊙ | 302FZ22160 | 2FZ22160 | ACTUATOR REGIST | 7 |
| ⊙ | 302FZ22170 | 2FZ22170 | HOOK CONVEYING F | 8 |
| ⊙ | 302FZ22180 | 2FZ22180 | HOOK CONVEYING R | 8 |
| | 302FZ22201 | 2FZ22201 | PLATE DISCHARGER | 8 |
| | 302FZ22211 | 2FZ22211 | HOLDER DISCHARGER | 8 |
| | 302FZ22220 | 2FZ22220 | CONTACT TRANSFER | 8 |
| | 302FZ22230 | 2FZ22230 | CONTACT DISCHARGE | 8 |
| | 302FZ22241 | 2FZ22241 | PLATE EARTH REGIST | 8 |
| | 302FZ22250 | 2FZ22250 | SPR NG EARTH CONVEYING | 8 |
| | 302FZ22300 | 2FZ22300 | SPR NG REGIST F | 8 |
| | 302FZ22310 | 2FZ22310 | SPR NG REGIST R | 8 |
| | 302FZ22320 | 2FZ22320 | SPR NG TRANSFER F | 8 |
| | 302FZ22330 | 2FZ22330 | SPR NG TRANSFER R | 8 |
| | 302FZ22341 | 2FZ22341 | SPR NG M DDLE | 7,8 |
| | 302FZ22350 | 2FZ22350 | SPR NG GUIDE TRANSFER | 8 |
| | 302FZ22360 | 2FZ22360 | SPR NG CONVEYING F | 8 |
| | 302FZ22370 | 2FZ22370 | SPR NG CONVEYING R | 8 |
| ⊙ | 302FZ22380 | 2FZ22380 | SHEET REGIST | 7 |
| | 302FZ22400 | 2FZ22400 | GUIDE M DDLE L | 8 |
| | 302FZ22411 | 2FZ22411 | HOLDER SENS FEED | 8 |

| | Part.No. | Alternative. | Description | Fig.No. |
|---|---|---|---|---|
| ⊙ | 302FZ22460 | 2FZ22460 | SHEET MIDDLE BYPASS | 7 |
| ⊙ | 302FZ22470 | 2FZ22470 | GEAR M DDLE A | 7 |
| ⊙ | 302FZ22481 | 2FZ22481 | GEAR M DDLE B | 7 |
| ⊙ | 302FZ22490 | 2FZ22490 | GEAR M DDLE Z19S | 7 |
| ⊙ | 302FZ22500 | 2FZ22500 | LEVER MIDDLE F | 7 |
| ⊙ | 302FZ22520 | 2FZ22520 | LEVER MIDDLE R | 7 |
| | 302FZ22540 | 2FZ22540 | SPRING EARTH CONVEYING UNIT | 8 |
| | 302FZ22551 | 2FZ22551 | COVER PWB FEED | 8 |
| | 302FZ22560 | 2FZ22560 | BUSH REGIST | 8 |
| | 302FZ22570 | 2FZ22570 | SPRING CONTACT DISCHARGER | 8 |
| | 302FZ22580 | 2FZ22580 | SPRING LEFT CONV | 8 |
| ⊙ | 302FZ22591 | 2FZ22591 | GUIDE MIDDLE LOW | 7 |
| | 302FZ22600 | 2FZ22600 | SPRING MID LEVER F | 7 |
| | 302FZ22610 | 2FZ22610 | SPRING MID LEVER R | 7 |
| | 302FZ22620 | 2FZ22620 | SPRING ACTUATOR REGIST | 7 |
| | 302FZ22630 | 2FZ22630 | SPRING EARTH MIDDLE | 7 |
| | 302FZ22660 | 2FZ22660 | SHAFT HOOK CONVEYING | 8 |
| | 302FZ22690 | 2FZ22690 | PLATE EARTH MID SENS | 7 |
| | 302FZ22700 | 2FZ22700 | STOPPER CORD | 7 |
| | 302FZ22720 | 2FZ22720 | SHEET MIDDLE L | 8 |
| ⊙ | 302FZ22750 | 2FZ22750 | ROLLER FEED LOW | 7 |
| | 302FZ22760 | 2FZ22760 | STOPPER EARTH M DDLE | 7,8,22 |
| | 302FZ22770 | 2FZ22770 | STOPPER BAND CONVEY | 8 |
| | 302FZ22781 | 2FZ22781 | SHEET GUIDE LOW A | 7 |
| | 302FZ22790 | 2FZ22790 | SHEET GUIDE LOW B | 7 |
| | 302FZ22800 | 2FZ22800 | GUIDE FEED LOW 1ST | 7 |
| | 302FZ22810 | 2FZ22810 | GUIDE FEED LOW 2ND | 7 |
| ⊙ | 302FZ22820 | 2FZ22820 | GUIDE FEED UP 1ST | 7 |
| ⊙ | 302FZ22830 | 2FZ22830 | GUIDE FEED UP 2ND | 7 |
| ⊙ | 302FZ22840 | 2FZ22840 | ACTUATOR MID BYPASS | 7 |
| ⊙ | 302FZ22860 | 2FZ22860 | GUIDE MIDDLE BYPASS | 7 |
| | 302FZ22870 | 2FZ22870 | SPRING ACTUATOR BYPASS | 7 |
| | 302FZ22880 | 2FZ22880 | LEVER CONVEYING | 8 |
| | 302FZ22890 | 2FZ22890 | COVER LEVER CONVEY | 8 |
| | 302FZ22900 | 2FZ22900 | SHAFT LEVER CONVEY | 8 |
| | 302FZ22911 | 2FZ22911 | STOPPER BUSH TRANSFER | 8 |
| | 302FZ22920 | 2FZ22920 | BUSH TRANSFER B F | 8 |
| | 302FZ22940 | 2FZ22940 | PLATE SENS MIDDLE | 7 |
| ⊙ | 302FZ22950 | 2FZ22950 | SHEET SENS M DDLE | 7 |
| | 302FZ22960 | 2FZ22960 | LABEL JAM FEED A1 | 8 |
| | 302FZ22980 | 2FZ22980 | STOPPER MID | 7 |
| | 302FZ22991 | 2FZ22991 | SHEET SENS CONVEY | 8 |
| | 302FZ23600 | 2FZ23600 | PIPE JOINT ICL | 10 |
| | 302FZ23610 | 2FZ23610 | SCREW WT ICL | 10 |
| | 302FZ23640 | 2FZ23640 | SEAL PIPE WT ICL | 10 |
| | 302FZ23650 | 2FZ23650 | PIPE WT ICL | 10 |
| | 302FZ23710 | 2FZ23710 | SEAL SHUTTER ICL | 10 |
| | 302FZ24010 | 2FZ24010 | SHEET REGIST L | 8 |
| | 302FZ24020 | 2FZ24020 | SHEET TRANSFER R | 2 |
| | 302FZ24060 | 2FZ24060 | BAND CONVEY NG | 8 |

• Parts with "⊙" indicate regular maintenance parts.

| | Part.No. | Alterna ive. | Description | Fig.No. |
|---|---|---|---|---|
| | 302FZ24090 | 2FZ24090 | BUSH TC EW | 7 |
| | 302FZ24100 | 2FZ24100 | GUIDE TC UP | 8 |
| | 302FZ24110 | 2FZ24110 | PLATE GUIDE MIDDLE R | 7 |
| | 302FZ24140 | 2FZ24140 | SPACER TC GUIDE | 8 |
| | 302FZ24150 | 2FZ24150 | SHEET LEFT PLATE | 9 |
| ⊙ | 302FZ24160 | 2FZ24160 | PAD REGIST | 7 |
| | 302FZ24170 | 2FZ24170 | SHEET RAIL BYPASS | 3 |
| | 302FZ24220 | 2FZ24220 | PLATE GUIDE MIDDLE F | 7 |
| | 302FZ24240 | 2FZ24240 | SHEET DISCHARGER | 8 |
| | 302FZ24500 | 2FZ24500 | PLATE CONV FAN | 8 |
| | 302FZ24510 | 2FZ24510 | DUCT CONV UP | 8 |
| | 302FZ24530 | 2FZ24530 | SEAL FAN CONV | 8 |
| | 302FZ24540 | 2FZ24540 | SPR NG EARTH FAN | 8 |
| | 302FZ24550 | 2FZ24550 | SEAL FAN CONV B | 8 |
| | 302FZ24560 | 2FZ24560 | SHEET FAN PWD | 8 |
| | 302FZ24600 | 2FZ24600 | BUSH SP | 1,7,8,9,20 |
| | 302FZ25380 | 2FZ25380 | SHAFT EXIT PULLEY | 19 |
| | 302FZ25940 | 2FZ25940 | PULLEY GUIDE | 10 |
| ⊙ | 302FZ28050 | 2FZ28050 | GUIDE CHANGE L | 9 |
| ⊙ | 302FZ28060 | 2FZ28060 | GEAR Z20S-Z23S | 19 |
| ⊙ | 302FZ28080 | 2FZ28080 | GEAR Z23S EXIT | 19 |
| ⊙ | 302FZ28090 | 2FZ28090 | GEAR Z29S | 19 |
| | 302FZ28100 | 2FZ28100 | SPR NG EXIT PULLEY | 19 |
| | 302FZ28110 | 2FZ28110 | SPR NG EXIT PULLEY A | 19 |
| | 302FZ28120 | 2FZ28120 | SPR NG EARTH | 19 |
| | 302FZ28152 | 2FZ28152 | FRAME EXIT UPPER | 19 |
| | 302FZ28160 | 2FZ28160 | FRAME EXIT LOWER | 19 |
| ⊙ | 302FZ28171 | 2FZ28171 | GUIDE CHANGE R | 19 |
| ⊙ | 302FZ28180 | 2FZ28180 | ACTUATOR EXIT L | 19 |
| | 302FZ28200 | 2FZ28200 | SPR NG ACTUATOR L | 19 |
| | 302FZ28210 | 2FZ28210 | SPR NG ACTUATOR R | 19 |
| | 302FZ28220 | 2FZ28220 | SPR NG LINK | 19 |
| | 302FZ28230 | 2FZ28230 | SPR NG SEPARATE | 9 |
| ⊙ | 302FZ28240 | 2FZ28240 | ACTUATOR EXIT R | 19 |
| | 302FZ28250 | 2FZ28250 | EARTH PLATE F/D | 19 |
| | 302FZ28260 | 2FZ28260 | EXIT PUSH | 19 |
| | 302FZ28270 | 2FZ28270 | SPR NG EXIT PUSH | 19 |
| ⊙ | 302FZ28280 | 2FZ28280 | SHEET S LENCER EXIT | 9,19 |
| ⊙ | 302FZ28410 | 2FZ28410 | ACTUATOR EXIT SENSOR | 19 |
| | 302FZ29012 | 2FZ29012 | FRAME DU | 9 |
| ⊙ | 302FZ29040 | 2FZ29040 | GEAR DU Z32S | 9 |
| ⊙ | 302FZ29050 | 2FZ29050 | GEAR DU IDLE | 9 |
| | 302FZ29061 | 2FZ29061 | PLATE EARTH DU | 9 |
| ⊙ | 302FZ29070 | 2FZ29070 | ACTUATOR DU | 9 |
| | 302FZ29080 | 2FZ29080 | RETAINER ACTUATOR DU | 9 |
| | 302FZ29090 | 2FZ29090 | SPR NG ACT DU | 9 |
| ⊙ | 302FZ29110 | 2FZ29110 | BELT DU | 9 |
| ⊙ | 302FZ29120 | 2FZ29120 | PULLEY DU BELT | 9 |
| | 302FZ29131 | 2FZ29131 | SPR NG DU | 9 |
| | 302FZ29140 | 2FZ29140 | COLLAR DU PULLEY | 9,17,22 |

| | Part.No. | Alternative. | Description | Fig.No. |
|---|---|---|---|---|
| ⊙ | 302FZ31020 | 2FZ31020 | MOTOR FEED | 17 |
| ⊙ | 302FZ31030 | 2FZ31030 | MOTOR DLP | 16 |
| ⊙ | 302FZ31071 | 2FZ31071 | MOTOR DU | 9 |
| | 302FZ31080 | 2FZ31080 | HOLDER DRUM DRIVE | 16 |
| | 302FZ31092 | 2FZ31092 | PLATE DRUM DRIVE | 16 |
| | 302FZ31100 | 2FZ31100 | PLATE MPF DRIVE | 16 |
| | 302FZ31111 | 2FZ31111 | HOLDER MPF DRIVE | 16 |
| | 302FZ31120 | 2FZ31120 | PLATE FEED DRIVE | 17 |
| | 302FZ31130 | 2FZ31130 | HOLDER FEED DRIVE | 17 |
| ⊙ | 302FZ31140 | 2FZ31140 | GEAR Z98L-Z40R MPF | 16 |
| | 302FZ31150 | 2FZ31150 | PLATE DRIVE TC | 16 |
| | 302FZ31160 | 2FZ31160 | SHAFT MPF CL | 16 |
| | 302FZ31170 | 2FZ31170 | HOLDER CLUTCH | 17 |
| | 302FZ31180 | 2FZ31180 | SHAFT DLP DRIVE | 16 |
| | 302FZ31190 | 2FZ31190 | SHAFT CLN DRIVE | 16 |
| | 302FZ31200 | 2FZ31200 | SHAFT FEED DRIVE | 17 |
| | 302FZ31210 | 2FZ31210 | SHAFT FEED 2 DRIVE | 17 |
| | 302FZ31220 | 2FZ31220 | SHAFT BYPASS DRIVE | 16 |
| | 302FZ31230 | 2FZ31230 | SHAFT BRS DRIVE | 16 |
| | 302FZ31240 | 2FZ31240 | SHAFT LSU DRIVE | 17 |
| ⊙ | 302FZ31250 | 2FZ31250 | COUPL NG DLP DRIVE | 16 |
| ⊙ | 302FZ31260 | 2FZ31260 | BELT FEED DRIVE | 17 |
| ⊙ | 302FZ31270 | 2FZ31270 | JOINT DRUM | 16 |
| | 302FZ31280 | 2FZ31280 | COLLAR DLP COUPLING | 16 |
| ⊙ | 302FZ31290 | 2FZ31290 | GEAR Z94L-Z32L MPF | 16 |
| ⊙ | 302FZ31300 | 2FZ31300 | GEAR Z38R MPF | 16 |
| ⊙ | 302FZ31310 | 2FZ31310 | GEAR Z24R BRS | 16 |
| ⊙ | 302FZ31320 | 2FZ31320 | GEAR Z20S BRS | 16 |
| ⊙ | 302FZ31330 | 2FZ31330 | GEAR Z22L DLP | 16 |
| ⊙ | 302FZ31340 | 2FZ31340 | GEAR Z24R | 16 |
| ⊙ | 302FZ31350 | 2FZ31350 | GEAR Z22R | 16 |
| ⊙ | 302FZ31360 | 2FZ31360 | GEAR Z50L | 16 |
| ⊙ | 302FZ31370 | 2FZ31370 | GEAR Z52R | 16 |
| ⊙ | 302FZ31380 | 2FZ31380 | GEAR Z55L | 16 |
| ⊙ | 302FZ31390 | 2FZ31390 | GEAR Z60L | 16 |
| ⊙ | 302FZ31401 | 2FZ31401 | GEAR Z54L-Z26L | 16 |
| ⊙ | 302FZ31410 | 2FZ31410 | GEAR Z42R-Z29R | 16 |
| ⊙ | 302FZ31420 | 2FZ31420 | GEAR Z81L-Z22R | 17 |
| ⊙ | 302FZ31430 | 2FZ31430 | GEAR Z42L | 17 |
| ⊙ | 302FZ31440 | 2FZ31440 | GEAR Z14R LSU | 17 |
| ⊙ | 302FZ31450 | 2FZ31450 | GEAR Z36L-Z22R REG | 17 |
| ⊙ | 302FZ31460 | 2FZ31460 | GEAR Z52L LSU | 17 |
| ⊙ | 302FZ31470 | 2FZ31470 | GEAR Z33R-Z23R CL | 17 |
| ⊙ | 302FZ31480 | 2FZ31480 | GEAR Z33R-Z23R FEED | 17 |
| ⊙ | 302FZ31490 | 2FZ31490 | GEAR Z28L | 17 |
| ⊙ | 302FZ31500 | 2FZ31500 | GEAR Z32L-Z26R FEED CL | 17 |
| ⊙ | 302FZ31510 | 2FZ31510 | GEAR Z26R-Z23L FEED CL | 17 |
| ⊙ | 302FZ31520 | 2FZ31520 | GEAR Z38R DSK | 17 |
| ⊙ | 302FZ31530 | 2FZ31530 | GEAR Z32L | 17 |
| ⊙ | 302FZ31540 | 2FZ31540 | GEAR Z26L BYPASS | 16 |

• Parts with "⊙" indicate regular maintenance parts.

| | Part.No. | Alterna ive. | Description | Fig.No. |
|---|---|---|---|---|
| ⊙ | 302FZ31550 | 2FZ31550 | GEAR Z27S BYPASS | 16 |
| ⊙ | 302FZ31560 | 2FZ31560 | GEAR Z84L Z30L TC | 16 |
| ⊙ | 302FZ31570 | 2FZ31570 | GEAR Z20L FUSER DRIVE | 17 |
| ⊙ | 302FZ31580 | 2FZ31580 | GEAR Z46 FUSER | 17 |
| ⊙ | 302FZ31590 | 2FZ31590 | GEAR Z35L CL | 17 |
| ⊙ | 302FZ31600 | 2FZ31600 | GEAR Z28R | 16 |
| | 302FZ31671 | 2FZ31671 | JOINT GEAR EXIT | 17 |
| ⊙ | 302FZ31680 | 2FZ31680 | PULLEY EXIT DRIVE | 17 |
| ⊙ | 302FZ31690 | 2FZ31690 | GEAR EXIT Z20 | 17 |
| ⊙ | 302FZ31700 | 2FZ31700 | GEAR EXIT Z63 Z21 | 17 |
| | 302FZ31710 | 2FZ31710 | PIN MPF DRIVE | 16 |
| | 302FZ31720 | 2FZ31720 | PIN MAIN DRIVE | 16 |
| ⊙ | 302FZ31730 | 2FZ31730 | PULLEY 26 FEED | 17 |
| | 302FZ31740 | 2FZ31740 | PIN DRIVE FEED | 17 |
| | 302FZ31750 | 2FZ31750 | PIN EXIT | 17 |
| ⊙ | 302FZ31760 | 2FZ31760 | GEAR EXIT Z39Z26 | 17 |
| ⊙ | 302FZ31770 | 2FZ31770 | GEAR EXIT Z30 JO NT | 17 |
| ⊙ | 302FZ31780 | 2FZ31780 | GEAR EXIT Z48 | 17 |
| | 302FZ31790 | 2FZ31790 | SPR NG EXIT 60 | 17 |
| ⊙ | 302FZ31800 | 2FZ31800 | GEAR Z25R JOINT | 17 |
| ⊙ | 302FZ31810 | 2FZ31810 | CLUTCH REGIST 8 | 16,17 |
| ⊙ | 302FZ31820 | 2FZ31820 | CLUTCH FEED 6 | 16,17 |
| ⊙ | 302FZ31830 | 2FZ31830 | CLUTCH MPF 6 | 20 |
| | 302FZ31840 | 2FZ31840 | STUD SCREW 435 | 17 |
| ⊙ | 302FZ31850 | 2FZ31850 | GEAR Z22L CLN | 16 |
| | 302FZ31861 | 2FZ31861 | MOUNT FUSER DRIVE | 17 |
| ⊙ | 302FZ31870 | 2FZ31870 | GEAR Z20 FUSER | 17 |
| ⊙ | 302FZ31890 | 2FZ31890 | GEAR Z35L DLP | 16 |
| ⊙ | 302FZ31900 | 2FZ31900 | GEAR Z60L CLN | 16 |
| ⊙ | 302FZ31910 | 2FZ31910 | GEAR EXIT Z45Z22 | 17 |
| ⊙ | 302FZ31920 | 2FZ31920 | GEAR Z30 FUSER | 17 |
| ⊙ | 302FZ31930 | 2FZ31930 | GEAR Z65-Z29 FUSER | 17 |
| | 302FZ31990 | 2FZ31990 | STOPPER D MOTOR | 16 |
| | 302FZ32010 | 2FZ32010 | PLATE FUSER DRIVE | 17 |
| | 302FZ32021 | 2FZ32021 | HOLDER FUSER CL | 17 |
| | 302FZ32030 | 2FZ32030 | SHAFT FUSER DRIVE | 17 |
| ⊙ | 302FZ32040 | 2FZ32040 | CLUTCH FUSER 8 | 17 |
| | 302FZ32051 | 2FZ32051 | HOLDER DRUM MOTOR | 16 |
| | 302FZ32060 | 2FZ32060 | SEAL MPF CL | 16 |
| | 302FZ32070 | 2FZ32070 | COUPLING PAPER FEED | 17 |
| ⊙ | 302FZ33011 | 2FZ33011 | DUCT EXIT LOWER | 18 |
| | 302FZ33020 | 2FZ33020 | DUCT EXIT UPPER | 18 |
| ⊙ | 302FZ33090 | 2FZ33090 | JOINT TUBE | 12 |
| | 302FZ33120 | 2FZ33120 | DUCT PU UPPER REAR | 3 |
| | 302FZ33140 | 2FZ33140 | BRACKET FAN A | 18 |
| | 302FZ33150 | 2FZ33150 | BRACKET FAN B | 18 |
| | 302FZ33170 | 2FZ33170 | SEAL BRACKET FAN A | 18 |
| | 302FZ33180 | 2FZ33180 | SEAL BRACKET FAN B | 18 |
| | 302FZ33191 | 2FZ33191 | BRACKET FAN C | 18 |
| | 302FZ33210 | 2FZ33210 | DUCT PU LOWER | 3 |

| | Part.No. | Alternative. | Description | Fig.No. |
|---|---|---|---|---|
| | 302FZ33220 | 2FZ33220 | DUCT PU UPPER | 3 |
| | 302FZ33231 | 2FZ33231 | BRACKET FAN D | 18 |
| | 302FZ33240 | 2FZ33240 | FILTER DUCT PU | 1 |
| | 302FZ33250 | 2FZ33250 | COVER FILTER DUCT PU | 1 |
| | 302FZ33280 | 2FZ33280 | JOINT TUBE B | 3 |
| | 302FZ33350 | 2FZ33350 | TUBE COOLING EXIT | 3 |
| | 302FZ33360 | 2FZ33360 | DUCT EXIT MOTOR | 18 |
| | 302FZ33370 | 2FZ33370 | PLATE DUCT EXIT | 18 |
| | 302FZ33380 | 2FZ33380 | SEAL DUCT EXIT | 18 |
| | 302FZ33390 | 2FZ33390 | SPRING TUBE | 3 |
| | 302FZ33400 | 2FZ33400 | SEAL BRACKET FAN C | 18 |
| | 302FZ33411 | 2FZ33411 | SEAL BRACKET FAN D | 18 |
| | 302FZ33420 | 2FZ33420 | SEAL BRACKET FAN E | 18 |
| ⊙ | 302FZ34010 | 2FZ34010 | LABEL OFF CAUTION E | 1 |
| ⊙ | 302FZ34021 | 2FZ34021 | LABEL JAM FUSER | 1 |
| | 302FZ34230 | 2FZ34230 | LABEL CONTA NER | 1 |
| | 302FZ34250 | 2FZ34250 | LABEL CONTAINER OPE A | 1 |
| | 302FZ34260 | 2FZ34260 | LABEL CONTAINER OPE E | 1 |
| ⊙ | 302FZ34270 | 2FZ34270 | LABEL BOARD SET | 1 |
| ⊙ | 302FZ34280 | 2FZ34280 | LABEL OFF CAUTION TW | 1 |
| | 302FZ34290 | 2FZ34290 | LABEL CONTAINER OPE TW | 1 |
| ⊙ | 302FZ39010 | 2FZ39010 | CONTROLLER BOX | 26 |
| | 302FZ39020 | 2FZ39020 | COVER CONTROLLER | 26 |
| ⊙ | 302FZ39030 | 2FZ39030 | MOUNT PU | 25 |
| | 302FZ39040 | 2FZ39040 | BRACKET HDD | 25 |
| | 302FZ39051 | 2FZ39051 | SH ELD BOX | 24 |
| | 302FZ39060 | 2FZ39060 | PLATE CONTROLLER | 26 |
| | 302FZ39071 | 2FZ39071 | MOUNT OPTION IF | 24 |
| | 302FZ39090 | 2FZ39090 | BRACKET HDD LOWER | 25 |
| | 302FZ39110 | 2FZ39110 | MOUNT HV TERMINAL | 23 |
| | 302FZ39210 | 2FZ39210 | GUIDE WIRE MAIN | 23 |
| | 302FZ39220 | 2FZ39220 | GUIDE W RE SUB | 23 |
| | 302FZ39490 | 2FZ39490 | SH ELD LSU WIRE | 3 |
| ⊙ | 302FZ39520 | 2FZ39520 | SPRING HV MA N | 23 |
| | 302FZ39530 | 2FZ39530 | SPRING ICL | 23 |
| ⊙ | 302FZ39540 | 2FZ39540 | SPRING HV TC1 | 24 |
| | 302FZ39550 | 2FZ39550 | BRACKET INLET | 24 |
| | 302FZ39570 | 2FZ39570 | TERM NAL TC1 | 24 |
| | 302FZ39580 | 2FZ39580 | TERM NAL ICL | 23 |
| | 302FZ39590 | 2FZ39590 | MOUNT TRANSFER HV | 24 |
| | 302FZ39610 | 2FZ39610 | HOLDER HV2 TC | 25 |
| ⊙ | 302FZ39620 | 2FZ39620 | SPRING HV2 TC | 25 |
| ⊙ | 302FZ39630 | 2FZ39630 | SPRING HV2 SE | 25 |
| | 302FZ39640 | 2FZ39640 | LID SHIELD BOX | 1 |
| | 302FZ39710 | 2FZ39710 | PLATE EARTH FUSER | 3 |
| | 302FZ39720 | 2FZ39720 | PLATE EARTH FEED | 17 |
| | 302FZ39731 | 2FZ39731 | PLATE MA N SW | 24 |
| | 302FZ39740 | 2FZ39740 | PLATE FRAME FUSER F | 3 |
| | 302FZ39750 | 2FZ39750 | PLATE EARTH FRAME REAR | 3 |
| | 302FZ39760 | 2FZ39760 | PLATE EARTH FRAME FRONT | 3 |

• Parts with "⊙" indicate regular maintenance parts.

| | Part.No. | Alterna ive. | Description | Fig.No. |
|---|---|---|---|---|
| | 302FZ39770 | 2FZ39770 | PLATE EARTH ISU REAR | 25 |
| | 302FZ39800 | 2FZ39800 | SHEET DLP MOTOR | 16 |
| | 302FZ39840 | 2FZ39840 | SHEET WIRE | 26 |
| | 302FZ39860 | 2FZ39860 | DUCT IPU | 25 |
| | 302FZ39870 | 2FZ39870 | GUIDE WIRE LOWER | 24 |
| | 302FZ39880 | 2FZ39880 | SHEET WIRE LOWER | 24 |
| | 302FZ39890 | 2FZ39890 | PAD WIRE A | 2 |
| | 302FZ39900 | 2FZ39900 | SHEET PWB | 23 |
| | 302FZ39920 | 2FZ39920 | MOUNT HV LOWER | 23 |
| | 302FZ39930 | 2FZ39930 | PLATE EARTH IPU | 24 |
| | 302FZ39960 | 2FZ39960 | SHEET MAIN DRIVE R | 16 |
| ⊙ | 302FZ44040 | 2FZ44040 | FAN BOX COOLING | 26 |
| ⊙ | 302FZ44050 | 2FZ44050 | SOLENOID LSU CLN | 7 |
| ⊙ | 302FZ44070 | 2FZ44070 | FAN CONVEYING 40 | 8 |
| ⊙ | 302FZ44080 | 2FZ44080 | SWITCH CONVEYING | 7 |
| ⊙ | 302FZ44090 | 2FZ44090 | SWITCH REGISTRATION | 7 |
| ⊙ | 302FZ45010 | 2FZ45010 | LVU 100 | 24 |
| ⊙ | 302FZ45020 | 2FZ45020 | LVU 200 | 24 |
| ⊙ | 302FZ45041 | 2FZ45041 | HVU TRANSFER 1 | 24 |
| ⊙ | 302FZ45051 | 2FZ45051 | HVU TRANSFER 2 | 25 |
| ⊙ | 302FZ45060 | 2FZ45060 | RFID RECIEVER | 18 |
| ⊙ | 302FZ45080 | 2FZ45080 | D SENSOR | 2 |
| ⊙ | 302FZ45120 | 2FZ45120 | THERMISTOR | 2 |
| ⊙ | 302FZ45160 | 2FZ45160 | HEATER DEHUMIDIFIER 240 | 23 |
| ⊙ | 302FZ45170 | 2FZ45170 | HEATER DEHUMIDIFIER 120 | 23 |
| | 302FZ46020 | 2FZ46020 | W RE JOINT | 17 |
| | 302FZ46031 | 2FZ46031 | W RE MPF | 23 |
| | 302FZ46040 | 2FZ46040 | W RE ID SENSOR | 2 |
| | 302FZ46050 | 2FZ46050 | W RE TRANSFER | 17 |
| | 302FZ46071 | 2FZ46071 | W RE APC | 26 |
| | 302FZ46081 | 2FZ46081 | W RE DLP MOTOR | 16 |
| | 302FZ46091 | 2FZ46091 | W RE FRONT SIDE | 18 |
| | 302FZ46100 | 2FZ46100 | W RE PRE FEED | 17 |
| | 302FZ46120 | 2FZ46120 | W RE HVU 2 | 24 |
| | 302FZ46130 | 2FZ46130 | W RE HVU 3 | 25 |
| | 302FZ46140 | 2FZ46140 | W RE DRUM-DLP CM | 26 |
| | 302FZ46150 | 2FZ46150 | W RE DRUM-DLP KY | 26 |
| | 302FZ46170 | 2FZ46170 | W RE FUSER | 24 |
| | 302FZ46191 | 2FZ46191 | W RE DRUM MOTOR SIG | 16 |
| | 302FZ46210 | 2FZ46210 | W RE INTERLOCK SWITCH | 24 |
| | 302FZ46220 | 2FZ46220 | W RE LVU ENGINE | 24 |
| | 302FZ46231 | 2FZ46231 | W RE LVU IPU | 24 |
| | 302FZ46240 | 2FZ46240 | W RE LVU CONTROLLER | 24 |
| | 302FZ46250 | 2FZ46250 | W RE LIFT MOT | 16 |
| | 302FZ46260 | 2FZ46260 | W RE MSW | 24 |
| | 302FZ46270 | 2FZ46270 | W RE CLEANING | 23 |
| | 302FZ46290 | 2FZ46290 | W RE FUSER PRI | 3 |
| | 302FZ46300 | 2FZ46300 | W RE HDD POWER | 25 |
| | 302FZ46310 | 2FZ46310 | W RE WASTE TONER SENSOR | 2 |
| | 302FZ46321 | 2FZ46321 | W RE ID SENSOR UNIT | 2 |

| | Part.No. | Alternative. | Description | Fig.No. |
|---|---|---|---|---|
| | 302FZ46330 | 2FZ46330 | WIRE FEED JAM | 7 |
| | 302FZ46340 | 2FZ46340 | WIRE JOB | 26 |
| | 302FZ46350 | 2FZ46350 | WIRE REG JAM | 7 |
| | 302FZ46392 | 2FZ46392 | WIRE OPTION SIGNAL | 24 |
| | 302FZ46411 | 2FZ46411 | WIRE EXIT MOT | 17 |
| | 302FZ46430 | 2FZ46430 | WIRE CASSETTE HEATER | 24 |
| | 302FZ46470 | 2FZ46470 | WIRE EXIT JAM SENSOR | 19 |
| | 302FZ46500 | 2FZ46500 | WIRE KEYCOUNTOR | 3 |
| | 302FZ46520 | 2FZ46520 | WIRE MPF UNIT | 20 |
| | 302FZ46540 | 2FZ46540 | WIRE FEED SW UP | 7 |
| | 302FZ46550 | 2FZ46550 | WIRE FEED SW LOW | 7 |
| | 302FZ46560 | 2FZ46560 | WIRE SCANNER-IPU PWB | 11 |
| | 302FZ46570 | 2FZ46570 | WIRE CCD DATA NON SHIELD | 11 |
| | 302FZ46600 | 2FZ46600 | WIRE LCD | 27 |
| | 302FZ46612 | 2FZ46612 | WIRE PANNEL L | 25 |
| | 302FZ46630 | 2FZ46630 | WIRE HDD | 25 |
| | 302FZ46641 | 2FZ46641 | WIRE FAX POWER | 24 |
| | 302FZ46651 | 2FZ46651 | WIRE IPU ENGINE | 25 |
| | 302FZ46661 | 2FZ46661 | WIRE INLET ASS'Y | 24 |
| | 302FZ46670 | 2FZ46670 | WIRE LSU FAN | 3,25 |
| | 302FZ46680 | 2FZ46680 | WIRE DU PI | 9 |
| | 302FZ46710 | 2FZ46710 | WIRE TONER SENSOR JOINT | 2 |
| | 302FZ46730 | 2FZ46730 | WIRE OP HEATER | 24 |
| | 302FZ46742 | 2FZ46742 | WIRE OP DESK | 24 |
| | 302FZ46761 | 2FZ46761 | WIRE REG CLT JO NT | 16 |
| | 302FZ46832 | 2FZ46832 | WIRE DRM MOT A | 16 |
| | 302FZ46840 | 2FZ46840 | WIRE BYPASS TRAY | 21 |
| | 302FZ46850 | 2FZ46850 | WIRE TRNS MOT JO NT | 16 |
| | 302FZ46861 | 2FZ46861 | WIRE TC GU DE | 8 |
| | 302FZ46880 | 2FZ46880 | WIRE FEED J | 8 |
| | 302FZ46890 | 2FZ46890 | WIRE FEED PI | 8 |
| ⊙ | 302FZ80070 | 2FZ80070 | FRONT COVER A ASSY SP | 1 |
| ⊙ | 302FZ80080 | 2FZ80080 | FRONT COVER E ASSY SP | 1 |
| ⊙ | 302FZ80190 | 2FZ80190 | FRONT COVER TW ASSY SP | 1 |
| ⊙ | 302FZ93034 | 2FZ93034 | PARTS CASSETTE 1ST ASSY | 4 |
| ⊙ | 302FZ93080 | 2FZ93080 | PARTS LSU ASS'Y | 12 |
| ⊙ | 302FZ93094 | 2FZ93094 | PARTS TRANSFER BELT ASS'Y | 10 |
| ⊙ | 302FZ93102 | 2FZ93102 | PARTS DRUM ASS'Y | 13 |
| ⊙ | 302FZ93113 | 2FZ93113 | PARTS DLP K ASS'Y | 14 |
| ⊙ | 302FZ93123 | 2FZ93123 | PARTS DLP Y ASS'Y | 14 |
| ⊙ | 302FZ93133 | 2FZ93133 | PARTS DLP C ASS'Y | 14 |
| ⊙ | 302FZ93143 | 2FZ93143 | PARTS DLP M ASS'Y | 14 |
| ⊙ | 302FZ93165 | 2FZ93165 | PARTS FUSER 120 ASS'Y | 15 |
| ⊙ | 302FZ93174 | 2FZ93174 | PARTS FUSER 200 ASS'Y | 15 |
| ⊙ | 302FZ93180 | 2FZ93180 | PARTS EXIT ASS'Y | 19 |
| ⊙ | 302FZ93201 | 2FZ93201 | PARTS OPERATION UPPER E ASS'Y | 27 |
| ⊙ | 302FZ93212 | 2FZ93212 | PARTS MPT BYPASS ASS'Y | 22 |
| ⊙ | 302FZ93220 | 2FZ93220 | PARTS MPT ASS'Y | 20 |
| ⊙ | 302FZ93230 | 2FZ93230 | PARTS MPT JOINT ASS'Y | 2 |
| ⊙ | 302FZ93250 | 2FZ93250 | PARTS MPF DRIVE ASS'Y | 16 |

• Parts with "⊙" indicate regular maintenance parts.

| | Part.No. | Alterna ive. | Description | Fig.No. |
|---|---|---|---|---|
| ⊙ | 302FZ93260 | 2FZ93260 | PARTS DR-820 | 16 |
| ⊙ | 302FZ93270 | 2FZ93270 | PARTS FUSER DRIVE ASS'Y | 17 |
| ⊙ | 302FZ93281 | 2FZ93281 | PARTS FEED DRIVE ASS'Y | 17 |
| ⊙ | 302FZ93290 | 2FZ93290 | PARTS CONT DRIVE ASS'Y | 18 |
| ⊙ | 302FZ93311 | 2FZ93311 | PARTS COVER FEED LOW ASS'Y | 1 |
| ⊙ | 302FZ93321 | 2FZ93321 | PARTS FE-820 | 6 |
| ⊙ | 302FZ93363 | 2FZ93363 | PARTS TRAY ASSY | 21 |
| ⊙ | 302FZ93423 | 2FZ93423 | PARTS PR NTED W BOARD CONTROL ASSY | 26 |
| ⊙ | 302FZ93430 | 2FZ93430 | PARTS GUIDE FEED R ASSY | 7 |
| ⊙ | 302FZ93440 | 2FZ93440 | PARTS MOTOR DRUM | 16 |
| ⊙ | 302FZ93453 | 2FZ93453 | PARTS PR NTED W BOARD ENGINE ASSY | 26 |
| ⊙ | 302FZ93460 | 2FZ93460 | PARTS ICL MOTOR ASSY | 18 |
| ⊙ | 302FZ93470 | 2FZ93470 | PARTS ISU ASS'Y | 12 |
| ⊙ | 302FZ93480 | 2FZ93480 | PARTS MC-820 | 13 |
| ⊙ | 302FZ93490 | 2FZ93490 | PARTS LEFT COVER ASSY | 9 |
| ⊙ | 302FZ93500 | 2FZ93500 | PARTS DU ASSY | 9 |
| ⊙ | 302FZ93510 | 2FZ93510 | PARTS FEED UNIT ASSY | 8 |
| ⊙ | 302FZ93520 | 2FZ93520 | PARTS OPERATION UPPER TW ASSY | 27 |
| ⊙ | 302FZ93533 | 2FZ93533 | PARTS FUSER 110 ASSY | 15 |
| ⊙ | 302FZ94052 | 2FZ94052 | PARTS,PWB IPU ASS'Y,SP | 25 |
| ⊙ | 302FZ94200 | 2FZ94200 | PARTS,GUIDE FEED LOW 1ST ASS'Y SP | 7 |
| ⊙ | 302FZ94210 | 2FZ94210 | PARTS,GUIDE FEED LOW 2ND ASS'Y SP | 7 |
| ⊙ | 302FZ94220 | 2FZ94220 | PARTS,GUIDE MIDDLE LOW ASS'Y SP | 7 |
| ⊙ | 302FZ94240 | 2FZ94240 | PARTS,GUIDE MIDDLE R ASS'Y SP | 7 |
| ⊙ | 302FZ94250 | 2FZ94250 | PARTS,MOTOR IMAGE SP | 16 |
| ⊙ | 302FZ94290 | 2FZ94290 | PARTS,MOTOR FUSER SP | 17 |
| ⊙ | 302FZ94320 | 2FZ94320 | PARTS,ICL WT ASS'Y SP | 10 |
| ⊙ | 302FZ94330 | 2FZ94330 | PARTS,ID SENSOR ASS'Y SP | 2 |
| ⊙ | 302FZ94380 | 2FZ94380 | PARTS,FAN COOL NG DLP 70 SP | 3,18 |
| ⊙ | 302FZ94420 | 2FZ94420 | PARTS,FAN COOL NG CONVEYING SP | 18,25 |
| ⊙ | 302FZ94470 | 2FZ94470 | PARTS,ROLLER BYPASS A SP | 22 |
| ⊙ | 302FZ94481 | 2FZ94481 | PARTS,ROLLER BYPASS B SP | 22 |
| ⊙ | 302FZ94490 | 2FZ94490 | PARTS,ROLLER MID MPT SP | 20 |
| ⊙ | 302FZ94510 | 2FZ94510 | PARTS,ROLLER TRANSFER SP | 8 |
| ⊙ | 302FZ94520 | 2FZ94520 | PARTS,ROLLER REGIST L SP | 8 |
| ⊙ | 302FZ94540 | 2FZ94540 | PARTS,ROLLER MIDDLE R SP | 7 |
| ⊙ | 302FZ94550 | 2FZ94550 | PARTS,ROLLER MIDDLE BYPASS SP | 7 |
| ⊙ | 302FZ94610 | 2FZ94610 | PARTS,ROLLER EXIT SP | 19 |
| ⊙ | 302FZ94620 | 2FZ94620 | PARTS,ROLLER DUPLEX A SP | 9 |
| ⊙ | 302FZ94630 | 2FZ94630 | PARTS,ROLLER DUPLEX B SP | 9 |
| ⊙ | 302FZ94660 | 2FZ94660 | PARTS,FAN IMAGE SP | 10 |
| ⊙ | 302FZ94670 | 2FZ94670 | PARTS,PWB MOTOR DRIVER ASS'Y,SP | 16 |
| ⊙ | 302FZ94681 | 2FZ94681 | PARTS,PWB FEED ASS'Y,SP | 17 |
| | 302G634070 | 2G634070 | LABEL ENERGY STAR | 1 |
| | 302GR02221 | 2GR02221 | LEVER LOCK CASSETTE | 3 |
| | 302GR02230 | 2GR02230 | SPR NG LEVER | 3 |
| | 302GR02311 | 2GR02311 | MOUNT RUBBER ISU | 3 |
| | 302GR02321 | 2GR02321 | ADJUSTOR ISU | 3 |
| | 302GR02570 | 2GR02570 | GROUND PLATE ISU C | 3 |
| | 302GR02580 | 2GR02580 | GROUND PLATE ISU D | 3 |

| | Part.No. | Alternative. | Description | Fig.No. |
|---|---|---|---|---|
| | 302GR04200 | 2GR04200 | COVER ISU FRONT LOW | 12 |
| | 302GR04210 | 2GR04210 | COVER ISU RIGHT | 12 |
| | 302GR04221 | 2GR04221 | COVER ISU LEFT | 12 |
| | 302GR04231 | 2GR04231 | COVER ISU REAR | 12 |
| | 302GR04240 | 2GR04240 | COVER ISU FRONT TOP | 12 |
| | 302GR04360 | 2GR04360 | GROUND PLATE ISU OPE | 12 |
| ⊙ | 302GR04370 | 2GR04370 | MAGNET CL P DISH | 3 |
| ⊙ | 302GR04380 | 2GR04380 | SEAL MAGNET | 3 |
| | 302GR04430 | 2GR04430 | SHEET COVER ISU | 12 |
| ⊙ | 302GR04470 | 2GR04470 | SHEET OPE PROTECT B | 27 |
| ⊙ | 302GR04480 | 2GR04480 | F LM PROTECT | 27 |
| | 302GR04490 | 2GR04490 | MOUNT W NG TRAY | 29 |
| | 302GR04500 | 2GR04500 | HOLDER WING TRAY | 29 |
| | 302GR05030 | 2GR05030 | HINGE OPERATION L | 27 |
| | 302GR05040 | 2GR05040 | HINGE OPERATION R | 27 |
| | 302GR05050 | 2GR05050 | BASE OPERATION | 27 |
| | 302GR05060 | 2GR05060 | MOUNT HANDLE OPE | 27 |
| | 302GR05070 | 2GR05070 | HANDLE OPE | 27 |
| | 302GR05080 | 2GR05080 | CUSHION HANDLE A | 27 |
| | 302GR05090 | 2GR05090 | BUSH PIN OPE | 27 |
| | 302GR05100 | 2GR05100 | SPRING HINGE OPE L | 27 |
| | 302GR05110 | 2GR05110 | SPRING HINGE OPE R | 27 |
| | 302GR05120 | 2GR05120 | MOUNT SLIDE | 27 |
| | 302GR05130 | 2GR05130 | PIN OPERATION | 27 |
| | 302GR05280 | 2GR05280 | LENS POWER LED | 27 |
| | 302GR05320 | 2GR05320 | GROUND PLATE OPE A | 27 |
| | 302GR05350 | 2GR05350 | SPRING MOUNT HANDLE A | 27 |
| | 302GR05510 | 2GR05510 | GROUND PLATE OPE B | 27 |
| | 302GR05520 | 2GR05520 | GROUND PLATE OPE C | 27 |
| | 302GR05650 | 2GR05650 | FILM OPERATION A | 27 |
| | 302GR06060 | 2GR06060 | HOLDER PICK | 6 |
| | 302GR06070 | 2GR06070 | SUPPORT PLATE FEED | 6 |
| | 302GR06080 | 2GR06080 | SPRING PICK | 6 |
| | 302GR06091 | 2GR06091 | SPRING SEPARATION | 6 |
| | 302GR06101 | 2GR06101 | SHAFT SEPARATION | 6 |
| ⊙ | 302GR06110 | 2GR06110 | TORQUE LIMITER 360 | 6 |
| | 302GR06201 | 2GR06201 | LEVER SEPARATION RELEASE | 6 |
| | 302GR09011 | 2GR09011 | CASSETTE | 5 |
| ⊙ | 302GR09020 | 2GR09020 | HANDLE CASSETTE 1 | 4,5 |
| ⊙ | 302GR09030 | 2GR09030 | COVER CASSETTE | 5 |
| ⊙ | 302GR09040 | 2GR09040 | HANDLE CASSETTE 2 | 4,5 |
| | 302GR09051 | 2GR09051 | LEVER CASSETTE | 4,5 |
| | 302GR09060 | 2GR09060 | RA L CURSOR R | 4,5 |
| | 302GR09070 | 2GR09070 | LID PAPER SIZE | 4,5 |
| | 302GR09080 | 2GR09080 | RA L CURSOR A | 4,5 |
| | 302GR09090 | 2GR09090 | SUPPORT PLATE | 4,5 |
| ⊙ | 302GR09102 | 2GR09102 | FRONT CURSOR CASSETTE | 4,5 |
| ⊙ | 302GR09112 | 2GR09112 | REAR CURSOR CASSETTE | 4,5 |
| | 302GR09120 | 2GR09120 | SPRING LEVER CASSETTE | 4,5 |
| | 302GR09130 | 2GR09130 | SHAFT PULLEY | 4,5 |

• Parts with "⊙" indicate regular maintenance parts.

| | Part.No. | Alterna ive. | Description | Fig.No. |
|---|---|---|---|---|
| ⊙ | 302GR09140 | 2GR09140 | SHAFT HANDLE | 5 |
| ⊙ | 302GR09150 | 2GR09150 | WORK PLATE HANDLE | 4,5 |
| | 302GR09160 | 2GR09160 | STOPPER PAPER | 4,5 |
| ⊙ | 302GR09201 | 2GR09201 | PLATE SIZE NCH | 5 |
| | 302GR09210 | 2GR09210 | SEAL DETECTION PLATE | 4,5 |
| ⊙ | 302GR09980 | 2GR09980 | SPACER SIZE PLATE | 4,5 |
| | 302GR09990 | 2GR09990 | LIFT LOCK | 4,5 |
| | 302GR17082 | 2GR17082 | MIRROR FRAME A | 11 |
| | 302GR17091 | 2GR17091 | MIRROR FRAME B | 11 |
| ⊙ | 302GR17100 | 2GR17100 | REAR WIRE SCANNER | 11 |
| ⊙ | 302GR17110 | 2GR17110 | FRONT WIRE SCANNER | 11 |
| ⊙ | 302GR17120 | 2GR17120 | LAMP SCANNER | 11 |
| | 302GR17131 | 2GR17131 | ADJUSTING PLATE B | 11 |
| | 302GR17140 | 2GR17140 | GUIDE WIRE A | 11 |
| | 302GR17150 | 2GR17150 | GUIDE WIRE B | 11 |
| | 302GR17160 | 2GR17160 | GUIDE WIRE C | 11 |
| ⊙ | 302GR17180 | 2GR17180 | PIN SCANNER RETA NING | 11 |
| | 302GR17190 | 2GR17190 | SHAFT SCANNER | 11 |
| | 302GR17250 | 2GR17250 | REFLECTOR SCANNER | 11 |
| | 302GR17262 | 2GR17262 | RETAINER MIRROR FRAME A | 12 |
| | 302GR17270 | 2GR17270 | MOUNT DP HINGE | 11 |
| ⊙ | 302GR17280 | 2GR17280 | MIRROR B | 11 |
| | 302GR17300 | 2GR17300 | MOUNT RELEASE SWITCH | 11 |
| | 302GR17320 | 2GR17320 | MOUNT SCANNER PWB | 11 |
| | 302GR17330 | 2GR17330 | RETAINER REGURATOR | 11 |
| | 302GR17340 | 2GR17340 | GUIDE FFC | 11 |
| | 302GR17350 | 2GR17350 | PIN WIRE PULLEY B | 11 |
| | 302GR17360 | 2GR17360 | SPR NG FRAME RETA NER | 12 |
| ⊙ | 302GR17370 | 2GR17370 | SWITCH RELEASE | 11 |
| | 302GR17380 | 2GR17380 | SPR NG RELEASE SWITCH | 11 |
| | 302GR17400 | 2GR17400 | F LM LAMP | 11 |
| | 302GR17410 | 2GR17410 | SEAL FRAME A | 11 |
| | 302GR17420 | 2GR17420 | SEAL FRAME B | 11 |
| | 302GR17430 | 2GR17430 | SEAL LAMP INVERTER | 11 |
| | 302GR17440 | 2GR17440 | HOLDER GUIDE WIRE C | 11 |
| | 302GR17450 | 2GR17450 | SEAL GUIDE WIRE D | 11 |
| | 302GR17460 | 2GR17460 | SEAL FRAME C | 11 |
| | 302GR17560 | 2GR17560 | COVER ISU | 12 |
| | 302GR17620 | 2GR17620 | TAPE REFLECTOR | 11 |
| | 302GR17660 | 2GR17660 | PIN ISU | 12 |
| | 302GR17670 | 2GR17670 | PLATE HOLDER ISU | 12 |
| | 302GR17680 | 2GR17680 | PLATE SPRING ISU | 12 |
| ⊙ | 302GR17730 | 2GR17730 | LID PWB S | 11 |
| | 302GR17740 | 2GR17740 | GUIDE WIRE D | 11 |
| | 302GR17750 | 2GR17750 | HOLDER PI | 11 |
| | 302GR17770 | 2GR17770 | GUIDE WIRE E | 11 |
| | 302GR17790 | 2GR17790 | PLATE HOLDER RA L | 12 |
| | 302GR17811 | 2GR17811 | PIN MOUNT LENS | 12 |
| | 302GR17820 | 2GR17820 | PULLEY SCANNER | 11 |
| ⊙ | 302GR17830 | 2GR17830 | PLATE MIRROR B | 11 |

| | Part.No. | Alternative. | Description | Fig.No. |
|---|---|---|---|---|
| ⊙ | 302GR17840 | 2GR17840 | SEAL PLATE MIRROR B | 11 |
| | 302GR17860 | 2GR17860 | PLATE PULLEY | 11 |
| | 302GR17870 | 2GR17870 | SEAL RAIL SCANNER F | 12 |
| | 302GR17880 | 2GR17880 | HOLDER BEARING | 11 |
| | 302GR17890 | 2GR17890 | SEAL SCANNER PWB | 11 |
| | 302GR17900 | 2GR17900 | HOLDER RETAINER A | 12 |
| | 302GR17910 | 2GR17910 | SEAL COVER ISU LEFT A | 12 |
| | 302GR17920 | 2GR17920 | SEAL COVER ISU LEFT B | 12 |
| | 302GR17930 | 2GR17930 | SEAL SCANNER FRAME E | 11 |
| | 302GR17940 | 2GR17940 | SEAL COVER ISU LEFT C | 12 |
| ⊙ | 302GR17960 | 2GR17960 | MIRROR C | 11 |
| | 302GR17970 | 2GR17970 | STOPPER PI | 11 |
| | 302GR17980 | 2GR17980 | PULLEY PLATE B | 11 |
| ⊙ | 302GR22110 | 2GR22110 | COLLAR TRANS ROLLER | 8 |
| ⊙ | 302GR34011 | 2GR34011 | LABEL CASSETTE OPERATION | 5 |
| ⊙ | 302GR34022 | 2GR34022 | LABEL PAPER SIZE | 4,5 |
| ⊙ | 302GR34032 | 2GR34032 | LABEL PAPER SIZE R | 5 |
| | 302GR34040 | 2GR34040 | LABEL LEFT COVER A | 1 |
| | 302GR34181 | 2GR34181 | LABEL SEP CLEANING | 1 |
| ⊙ | 302GR34230 | 2GR34230 | LABEL OFF CAUTION A | 1 |
| ⊙ | 302GR34420 | 2GR34420 | LABEL VFEED CAUTION TW | 9 |
| | 302GR39190 | 2GR39190 | COVER CONN | 23 |
| ⊙ | 302GR44112 | 2GR44112 | MOTOR LIFT | 16 |
| ⊙ | 302GR44270 | 2GR44270 | MOTOR SCANNER | 11 |
| ⊙ | 302GR45080 | 2GR45080 | UNIT LAMP INVERTER | 11 |
| | 302GR46010 | 2GR46010 | WIRE CCD1 | 12 |
| | 302GR46021 | 2GR46021 | WIRE SHD-SCANNER PWB | 11 |
| | 302GR46040 | 2GR46040 | WIRE SCANNER HP SW | 11 |
| | 302GR46060 | 2GR46060 | WIRE LAMP INVERTER | 11 |
| | 302GR46430 | 2GR46430 | WIRE PRIMARY FEED UNIT1 | 6 |
| | 302GR46450 | 2GR46450 | WIRE CASSETTE UNIT | 4,5 |
| ⊙ | 302GR93082 | 2GR93082 | CT-710 | 5 |
| ⊙ | 302GR93310 | 2GR93310 | PARTS CONTACT GLASS (M) ASSY | 12 |
| ⊙ | 302GR93320 | 2GR93320 | PARTS CONTACT GLASS (I) ASSY | 12 |
| ⊙ | 302GR94380 | 2GR94380 | PARTS CONTACT GLASS DP ASSY | 12 |
| ⊙ | 302HC93012 | 2HC93012 | PARTS PRINTED W.BOARD CONTROL ASSY | 26 |
| | 302HP34040 | 2HP34040 | LABEL JAM CONVEYING | 9 |
| | 302HP46050 | 2HP46050 | WIRE FEED JO NT | 23 |
| | 302JD04010 | 2JD04010 | COVER REAR MOTOR | 1 |
| | 302JD04030 | 2JD04030 | COVER REAR | 1 |
| | 302JD04040 | 2JD04040 | LID SHIELD BOX | 1 |
| | 302JD04050 | 2JD04050 | BASE EMBLEM 4035E | 1 |
| | 302JD04060 | 2JD04060 | EMBLEM LOGO | 1 |
| | 302JD04070 | 2JD04070 | SHEET EMBLEM | 1 |
| | 302JD04080 | 2JD04080 | PLATE EMBLEM | 1 |
| | 302JD04090 | 2JD04090 | TAPE EMBLEM A | 1 |
| | 302JD04100 | 2JD04100 | TAPE EMBLEM B | 1 |
| | 302JD31040 | 2JD31040 | HOLDER MAIN DRIVE | 16 |
| | 302JD31050 | 2JD31050 | HOLDER FEED DRIVE | 17 |
| | 302JD31060 | 2JD31060 | HOLDER MPF DRIVE | 16 |

• Parts with "⊙" indicate regular maintenance parts.

| | Part.No. | Alterna ive. | Description | Fig.No. |
|---|---|---|---|---|
| | 302JD31070 | 2JD31070 | HOLDER DLP CL | 16 |
| | 302JD31080 | 2JD31080 | PLATE MAIN DRIVE | 16 |
| | 302JD31090 | 2JD31090 | PLATE FEED DRIVE | 17 |
| | 302JD31100 | 2JD31100 | PLATE MPF DRIVE | 16 |
| | 302JD31110 | 2JD31110 | PLATE DRIVE TC | 16 |
| | 302JD31120 | 2JD31120 | SHAFT CLN DRIVE | 16 |
| | 302JD31130 | 2JD31130 | SHAFT DLP K | 16 |
| | 302JD31140 | 2JD31140 | SHAFT DLP CL | 16 |
| ⊙ | 302JD31150 | 2JD31150 | GEAR Z20R | 16 |
| ⊙ | 302JD31160 | 2JD31160 | GEAR Z31R CL | 16 |
| ⊙ | 302JD31170 | 2JD31170 | GEAR Z31L | 16 |
| ⊙ | 302JD31180 | 2JD31180 | GEAR Z32R | 16 |
| ⊙ | 302JD31190 | 2JD31190 | GEAR Z29R | 16 |
| ⊙ | 302JD31200 | 2JD31200 | GEAR Z70L Z26R FEED | 17 |
| ⊙ | 302JD31210 | 2JD31210 | GEAR Z33L FEED | 17 |
| ⊙ | 302JD31220 | 2JD31220 | GEAR Z85L-Z47R MPF | 16 |
| ⊙ | 302JD31230 | 2JD31230 | GEAR Z86L Z39L MPF | 16 |
| ⊙ | 302JD31240 | 2JD31240 | GEAR Z72L Z30L TC | 16 |
| | 302JD31250 | 2JD31250 | SHEET MA N DRIVE | 16 |
| | 302JD39010 | 2JD39010 | MOUNT TRANSFER HV | 24 |
| | 302JD39020 | 2JD39020 | SHEET TRANSFER HV | 24 |
| | 302JD46010 | 2JD46010 | W RE FEED JOINT | 23 |
| | 302JD46020 | 2JD46020 | W RE HVU 2 | 24 |
| | 302JD46030 | 2JD46030 | W RE HVU 3 | 25 |
| | 302JD46040 | 2JD46040 | W RE DRUM MOTOR SIG | 16 |
| | 302JD46050 | 2JD46050 | W RE DRM MOT A | 16 |
| | 302JD46060 | 2JD46060 | W RE APC FAN | 3 |
| | 302JD46100 | 2JD46100 | W RE FUSER | 24 |
| | 302JD46130 | 2JD46130 | W RE TRNS MOT JOINT | 16 |
| ⊙ | 302JD93010 | 2JD93010 | PARTS LSU ASSY | 12 |
| ⊙ | 302JD93020 | 2JD93020 | PARTS MPF DRIVE ASSY | 16 |
| ⊙ | 302JD93030 | 2JD93030 | PARTS MAIN DRIVE ASSY | 16 |
| ⊙ | 302JD93040 | 2JD93040 | PARTS FEED DRIVE ASSY | 17 |
| ⊙ | 302JD93050 | 2JD93050 | PARTS FUSER 120 ASSY | 15 |
| ⊙ | 302JD93060 | 2JD93060 | PARTS FUSER 200 ASSY | 15 |
| ⊙ | 302JD93080 | 2JD93080 | PARTS DRUM ASSY | 13 |
| ⊙ | 302JD93090 | 2JD93090 | PARTS PR NTED W BOARD ENGINE | 26 |
| ⊙ | 302JD93120 | 2JD93120 | PARTS MC-825 | 13 |
| ⊙ | 302JD93130 | 2JD93130 | PARTS MOTOR DRUM | 16 |
| ⊙ | 302JD94010 | 2JD94010 | PARTS,MOTOR IMAGE SP | 16 |
| ⊙ | 302JD94020 | 2JD94020 | PARTS,CLUTCH DLP 8 SP | 16 |
| ⊙ | 302JD94030 | 2JD94030 | PARTS,PWB SCANNER ASSY SP | 11 |
| ⊙ | 302JD94040 | 2JD94040 | PARTS,PWB SHD ASSY SP | 11 |
| ⊙ | 302JD94050 | 2JD94050 | PARTS,PWB IPU U ASSY SP | 25 |
| ⊙ | 302JD94060 | 2JD94060 | PARTS,PWB DIMM IPU U ASSY SP | 25 |
| ⊙ | 302JD94070 | 2JD94070 | PARTS,PWB DIMM IPU E ASSY SP | 25 |
| ⊙ | 302JD94080 | 2JD94080 | PARTS,PWB DIMM PRINTER ASSY SP | 26 |
| ⊙ | 302JD94090 | 2JD94090 | PARTS,PWB MOTOR DRIVER ASSY SP | 16 |
| ⊙ | 302JD94100 | 2JD94100 | PARTS,PWB HVU TRANSFER 1 ASSY SP | 24 |
| ⊙ | 302JD94110 | 2JD94110 | PARTS,PWB HVU TRANSFER 2 ASSY SP | 25 |

| | Part.No. | Alternative. | Description | Fig.No. |
|---|---|---|---|---|
| ⊙ | 302JD94120 | 2JD94120 | PARTS,PWB HVU MA N ASSY SP | 23 |
| | 302JG04010 | 2JG04010 | BASE EMBLEM 3232E | 1 |
| ⊙ | 302JG45010 | 2JG45010 | HVU MAIN | 23 |
| | 302JJ04010 | 2JJ04010 | BASE EMBLEM 3225E | 1 |
| | 302JL04010 | 2JL04010 | BASE EMBLEM 2525E | 1 |
| ⊙ | 303H605010 | 3H605010 | LABEL ORIGINAL MAX | 21 |
| ⊙ | 303JR01011 | 3JR01011 | SCANNER NIC ASS'Y | 25 |
| | 303JT39020 | 3JT39020 | COVER CF | 1 |
| | 303KB28010 | 3KB28010 | PAD JS SENSOR | 11 |
| | 3065027601 | 65027601 | POWER CORD 110 | 24 |
| | 3066060011 | 66060011 | COVER,KEY COUNTER | 29 |
| | 3066060023 | 66060023 | RETAINER,KEY COUNTER COVER | 29 |
| | 3066060031 | 66060031 | RETAINER,KEY COUNTER | 29 |
| | 3066060041 | 66060041 | MOUNT,KEY COUNTER | 29 |
| ⊙ | 33906160 | | GEAR 16,PAPER FEED | 6 |
| ⊙ | 33906400 | | FRICTION PLATE,BYPASS | 20 |
| | 33906900 | | COVER,CURSOR | 21 |
| | 33907170 | | DETECTION PLATE,PAPER SIZE | 4,5 |
| | 33907210 | | CUSHION,CASSETTE WORK PLATE | 4,5 |
| | 34806040 | | LOWER BUSHING,PAPER FEED | 6 |
| ⊙ | 34821210 | | STATIC EL MINATOR B,EJECT | 19 |
| | 34907150 | | PULLEY,CASSETTE | 4,5 |
| ⊙ | 34922420 | | GEAR 15 | 6 |
| | 35927420 | | SWITCH,SIZE | 1,7 |
| ⊙ | 35968110 | | STOPPER W RE ASS'Y SP | 30 |
| | 3C007060 | | PAD,L FT | 21 |
| ⊙ | 3CF04060 | | PLATE NUMBER4 | 5 |
| | 3CY06030 | | RETAINER M4 | 4,5 |
| ⊙ | 3CY06090 | | RACK CURSOR | 4,5 |
| ⊙ | 3CY06100 | | GEAR 20,CURSOR | 4,5 |
| | 3CY07080 | | BUSHING 6 | 2,16,19 |
| | 3HK27050 | | CORE 8-16X10 | 16,18 |
| | 3HL10170 | | COLLAR EJECT | 17 |
| | 4AK73740 | 5MVVL221WN33 | LABEL CONTAINER T1 | 1 |
| | 4AK73750 | 5MVVL221WN34 | LABEL CONTAINER T2 | 1 |
| | 4AK73760 | 5MVVL221WN35 | LABEL CONTAINER T3 | 1 |
| | 4AK73770 | 5MVVL221WN36 | LABEL CONTAINER T4 | 1 |
| ⊙ | 5FNXGP1A73A++02 | 2DC27180 | PT.SENSOR GP1A73AJ00/ BK | 6 |
| | 5MMS626SD003 | 2BM04100 | PLATE MAGCHATCH | 1 |
| | 5MMT263SN012++R | 2D903100 | SCREW OP / M3 X 8 CRFREE A4 | 26 |
| | 5MMW261SD004 | 3B706550 | SPRING COVER R /40283V0069 A4 | 1 |
| | 5MMW465LD003 | 2D915380 | SPRING SHUTTER WASTE/A-80 A4 | 10 |
| | 5MMX321LD039 | 2D902590 | PLATE WASTE SENSOR /A-80 A3 | 2 |
| | 5MVB743SL005 | 2BL26220 | RA L OPTION B /B-05 CONT BOX A2 | 26 |
| | 5MVL177DN001 | 2FB06810 | RING STOPPER 4 | 20 |
| | 5MVM176XN001 | 2BM14330 | BUSH D1234 | 20 |
| | 5MVS313SB002 | 2BR08310 | SPACER LED /43587J2063 A4 | 2 |
| | 5MVS665KB001 | 2BM40060 | CUT WASHER | 11,16,17,22 |
| | 5MVX111DN003 | 2A806250 | RING STOPPER /A-49 FEED A4 | 6,7,8,9,16,17, 19,20,22 |

• Parts with "⊙" indicate regular maintenance parts.

| | Part.No. | Alterna ive. | Description | Fig.No. |
|---|---|---|---|---|
| ⊙ | 5MVX321CE001 | 3CF04050 | PLATE NUMBER 3 /3CF0405 A4 | 5 |
| | 5MVX332DB020 | 2BS08510 | SHUTTER WASTE /43587J2027 A4 | 10 |
| | 5MVX421DN003 | 2BL06490 | LOCK COVER R /40283V0068 A4 | 1 |
| | 60804120 | | MAGNET CATCH | 1,18 |
| | 60904280 | | ORIG NAL POCKET | 28 |
| ⊙ | 60907170 | | CUSHION,CASSETTE R | 4,5 |
| ⊙ | 61705110 | | LABEL,PAPER UPPER LIMIT | 5 |
| | 66106080 | | SPR NG,PAD | 4,5 |
| | 66107100 | | PAD,CASSETTE | 4,5 |
| ⊙ | 66127010 | | SWITCH,COVER OPEN | 23 |
| | 75712080 | | MIRROR HOLDER | 11 |
| ⊙ | 76727010 | | ORIG NAL SIZE SWITCH | 21 |
| ⊙ | 7NH3M040G003H01 | NH045080 | STORAGE DEVICE | 25 |
| ⊙ | 7NMDD256MA01H01 | NM037700 | MEMORY MODULE | 26 |
| ⊙ | 7NMDD256MJ41H01 | NM038860 | MEMORY MODULE | 25 |
| ⊙ | 7NMDD512MJ41H01 | NM038870 | MEMORY MODULE | 25 |
| | 7QPPT491F+++H01 | NAEFJ010 | TRANSISTOR PHOTO PT491FE0000F | 2 |
| ⊙ | 7SC010101+++H01 | SC023350 | SW.SEESAW | 24 |
| | 7SM010303+++H01 | SM037910 | SW.MICRO | 17 |
| | 7YCC02B1001+H01 | YC014610 | CONNECTOR | 2 |
| ⊙ | 7YCC08B2046+H01 | YC026110 | CONNECTOR | 4,5,6 |
| | 7YCC08B2046+H02 | YC026130 | CONNECTOR | 17,23 |
| | 7YZM110004++H01 | YZ037960 | ACCESS.BUSH NG | 2 |
| | 7YZM210002++H01 | YZ004730 | ACCESS.EDGING | 2,3,24,25 |
| | 7YZM210003++H01 | YZ037970 | ACCESS.EDGING | 2,3,11,24 |
| | 7YZM210004++H01 | YZ037980 | ACCESS.EDGING | 24,25,26 |
| | 7YZM210006++H01 | YZ038000 | ACCESS.EDGING | 3,8,17,24,25 |
| | 7YZM410001++H01 | YZ037950 | ACCESS BAND | 17 |
| | 7YZM410002++H01 | YZ042720 | ACCESS BAND | 11 |
| | 7YZM510006++H01 | YZ042710 | ACCESS.SPACER | 27 |
| | 7YZM510007++H01 | YZ042780 | ACCESS.SPACER | 24 |
| | 7YZM610001++H01 | YZ010230 | ACCESS SADDLE | 2,3,11,12,23,24 |
| | 7YZM610002++H01 | YZ010240 | ACCESS SADDLE | 2,18 |
| | 7YZM610003++H01 | YZ010250 | ACCESS SADDLE | 3,17,18,24,25, 26 |
| | 7YZM610004++H01 | YZ012210 | ACCESS SADDLE | 3,16,24,25 |
| | 7YZM610005++H01 | YZ012220 | ACCESS SADDLE | 26 |
| | 7YZM610007++H01 | YZ023340 | ACCESS.SADDLE | 2,3,7,8,11 |
| | 7YZM610008++H01 | YZ037940 | ACCESS.SADDLE | 2,18 |
| | 7YZM610015++H01 | YZ046900 | ACCESS.SADDLE | 24 |
| | 7YZM610016++H01 | YZ047890 | ACCESS.SADDLE | 25 |
| | 7ZG65TAV+080H01 | ZG046700 | SHIELD GASKET | 3 |
| | 7ZG65TSV+015H01 | ZG045200 | SHIELD GASKET | 11 |
| | 7ZG65TSV+020H01 | ZG046810 | SHIELD GASKET | 9 |
| | 7ZGSSTG31020H01 | ZG046820 | SHIELD GASKET | 26 |
| | 7ZGSTG151018H01 | ZG045090 | SHIELD GASKET | 12 |
| | 7ZGSTG77+014H01 | ZG045150 | SHIELD GASKET | 9 |
| | 7ZS15063001+H01 | ZS041810 | THERMAL SHEET | 27 |
| | 7ZS22110301+H01 | ZS038190 | THERMAL SEAT | 11 |
| | 7ZS40405001+H01 | ZS044250 | THERMAL SHEET | 25 |

| | Part.No. | Alternative. | Description | Fig.No. |
|---|---|---|---|---|
| ⊙ | 82142540 | | KEY COUNTER | 29 |
| | M2307010 | | BINDING BAND,T18R | 21 |
| | M7005010 | | CLAMP,EMT-3N(TAKEUCHI) | 3 |

• Parts with "⊙" indicate regular maintenance parts.

## KYOCERA MITA EUROPE B.V.

Hoeksteen 40, 2132 MS Hoofddorp,
The Netherlands
Phone: +31.20.654.0000
Home page: http://www.kyoceramita-europe.com
Email: info@kyoceramita-europe.com

### KYOCERA MITA NEDERLAND B.V.

Beechavenue 25,1119RA Schiphol-Rijk
The Netherlands
Phone: +31.20.58.77.200

### KYOCERA MITA (UK) LTD

8 Beacontree Plaza
Gillette Way Reading Berks RG2 0BS,
U.K.
Phone: +44.1189.311.500

### KYOCERA MITA ITALIA S.p.A.

Via G. Verdi, 89 / 91, 20063 Cernusco s/N
Milano, Italy
Phone: +39.02.92179.1

### S.A. KYOCERA MITA BELGIUM N.V.

Hermesstraat 8A,1930 Zaventem,
Belgium
Phone: +32.2.720.9270

### KYOCERA MITA FRANCE S.A.

Parc Les Algorithmes Saint Aubin
91194 GIF-SUR-YVETTE,
France
Phone: +33.1.6985.2600

### KYOCERA MITA ESPAÑA S.A.

Edificio Kyocera, Avda de Manacor No. 2,
28290 Las Matas (Madrid),
Spain
Phone: +34.91.631.8392

### KYOCERA MITA FINLAND OY

Kirvesmiehenkatu 4, 00880 Helsinki,
Finland
Phone: +358.9.4780.5200

### KYOCERA MITA (SCHWEIZ)

Hohlstrasse 614, 8048 Zürich
Switzerland
Phone: +41.1.908.4949

### KYOCERA MITA DEUTSCHLAND GMBH

Otto-Hahn-Str. 12 D-40670 Meerbusch,
Germany
Phone: +49.2159.918.0

### KYOCERA MITA GMBH AUSTRIA

Eduard-Kittenberger-Gasse 95,
1230 Wien,
Austria
Phone: +43.1.86338.210

### KYOCERA MITA SVENSKA AB

Esbogatan 16B 164 75 Kista,
Sweden
Phone: +46.8.546.55000

### KYOCERA MITA NORGE

Postboks 150 Oppsal, NO 0619 Oslo
Olaf Helsetsvei 6, NO 0694 Oslo,
Norway
Phone: +47.22.62.73.00

### KYOCERA MITA DANMARK A/S

Ejby Industrivej 1, DK-2600 Glostrup,
Denmark
Phone: +45.5687.1100

### KYOCERA MITA PORTUGAL LDA.

Rua do Centro Cultural, 41 (Alvalade) 1700-106 Lisbon,
Portugal
Phone: +351.21.842.9100

### KYOCERA MITA SOUTH AFRICA (PTY) LTD.

527 Kyalami Boulevard,
Kyalami Business Park Midrand,
South Africa
Phone: +27.(0)11.540.2600

## KYOCERA MITA AMERICA, INC.

Headquarters:
225 Sand Road,
Fairfield, New Jersey 07004-0008,
U.S.A.
Phone: (973) 808-8444

### KYOCERA MITA AUSTRALIA PTY. LTD.

Level 3, 6-10 Talavera Road, North Ryde,
N.S.W. 2113 Australia
Phone: (02) 9888-9999

### KYOCERA MITA NEW ZEALAND LTD.

1-3 Parkhead Place, Albany
P.O. Box 302 125 NHPC, Auckland,
New Zealand
Phone: (09) 415-4517

### KYOCERA MITA (THAILAND) CORP., LTD.

9/209 Ratchada-Prachachem Road,
Bang Sue, Bangkok 10800, Thailand
Phone: (02) 586-0320

### KYOCERA MITA SINGAPORE PTE LTD.

121 Genting Lane, 3rd Level,
Singapore 349572
Phone: 67418733

### KYOCERA MITA HONG KONG LIMITED

11/F., Mita Centre,
552-566, Castle Peak Road,
Tsuen Wan, New Territories,
Hong Kong
Phone: 24297422

### KYOCERA MITA TAIWAN Corporation.

7F-1~2, No.41, Lane 221, Gangchi Rd.
Neihu District, Taipei, Taiwan, 114. R.O.C.
Phone: (02) 87511560

## KYOCERA MITA Corporation

2-28, 1-chome, Tamatsukuri, Chuo-ku
Osaka 540-8585, Japan
Phone: (06) 6764-3555
http://www.kyoceramita.com



©2007 KYOCERA MITA Corporation
KYOCERA is a trademark of Kyocera Corporation



Printed in Holland

## KYOCERA MITA AMERICA, INC.

**Headquarters:**
225 Sand Road,
Fairfield, New Jersey 07004-0008
TEL : (973) 808-8444
FAX : (973) 882-6000

**New York Branch:**
1410 Broadway 23rd floor
New York, NY 10018
TEL : (917) 286-5400
FAX : (917) 286-5402

**Northeastern Region:**
225 Sand Road,
Fairfield, New Jersey 07004-0008
TEL : (973) 808-8444
FAX : (973) 882-4401

**Midwestern Region:**
201 Hansen Court Suite 119
Wood Dale, Illinois 60191
TEL : (630) 238-9982
FAX : (630) 238-9487

**Western Region:**
14101 Alton Parkway,
Irvine, California 92618-7006
TEL : (949) 457-9000
FAX : (949) 457-9119

**Southeastern Region:**
1500 Oakbrook Drive,
Norcross, Georgia 30093
TEL : (770) 729-9786
FAX : (770) 729-9873

**Southwestern Region:**
2825 West Story Road,
Irving, Texas 75038-5299
TEL : (972) 550-8987
FAX : (972) 252-9786

**National Operation Center**
**& National Training Center:**
2825 West Story Road,
Irving, Texas 75038-5299
TEL : (972) 659-0055
FAX : (972) 570-5816

**Latin America Division:**
8240 N.W. 52nd. Terrace Dawson Building,
Suite 108 Miami, Florida 33166
TEL : (305) 421-6640
FAX : (305) 421-6666

## KYOCERA MITA CANADA, LTD.

6120 Kestrel Road, Mississauga,
Ontario L5T 1S8, Canada
TEL : (905) 670-4425
FAX : (905) 670-8116

## KYOCERA MITA MEXICO, S.A. DE C.V.

Av. 16 de Septiembre #407
Col. Santa Inés,
Azcapotzalco México,
D.F. 02130, México
TEL : (55) 5383-2741
FAX : (55) 5383-7804



©2007 KYOCERA MITA Corporation

http://www.kyoceramita.com
KYOCERA is a trademark of Kyocera Corporation


Printed in U.S.A.