SAMSUNG

User guide

Gaming Monitor

S27FG53*

The color and the appearance may differ depending on the product, and the content in the manual is subject to change without prior notice to improve the performance.

The contents of this manual are subject to change without notice to improve quality.

© Samsung

Samsung owns the copyright for this manual.

Use or reproduction of this manual in parts or entirety without the authorization of Samsung is prohibited.

Trademarks other than that of Samsung are owned by their respective owners.

Table of contents

Before Using the Product

Safety Precautions	**4**
Electricity and Safety	4
Installation	5
Operation	6
Cleaning	**8**
Correct posture to use the product	**8**

Preparations

Installation	**9**
Attaching the Stand	9
Precautions for moving the product	10
Checking the space around the product	10
Adjusting the Product Tilt	11
Anti-theft Lock	11
Wall Mount Kit Specifications (VESA)	12
Control Panel	**13**

Connecting and Using a Source Device

Read below before connecting the product.	**14**
Ports	**14**
Connecting and Using a PC	**15**
Connection Using the HDMI Cable	15
Connection Using an DP Cable	15
Connecting to headphones or earphones	15
Connecting the Power	15
Tidying Up the Cables	**16**
Setting Optimum Resolution	**16**
List of graphic cards supporting HDR10	**16**

Menu

Game	**17**
Picture	**18**
OnScreen Display	**20**
System	**21**
Support	**22**

Installing the Software

Easy Setting Box	**24**
Restrictions and Problems with the Installation	24
System Requirements	24
Driver Installation	**24**

Table of contents

Troubleshooting Guide

Requirements Before Contacting Samsung Customer Service Center	**25**
Product diagnosis (Screen issue)	25
Checking the Resolution and Frequency	25
Check the following.	25
Q & A	**28**

Specifications

General	**29**
Standard Signal Mode Table	**31**

Appendix

Responsibility for the Pay Service (Cost to Customers)	**33**
Not a product defect	33
A Product damage caused by customer's fault	33
Others	33
FreeSync (for AMD graphics card)	**34**

Before Using the Product

Safety Precautions

Warning

A serious or fatal injury may result if instructions are not followed.

Caution

Personal injury or damage to properties may result if instructions are not followed.

CAUTION			
RISK OF ELECTRIC SHOCK. DO NOT OPEN.			
CAUTION: TO REDUCE THE RISK OF ELECTRIC SHOCK, DO NOT REMOVE COVER (OR BACK). THERE ARE NO USER SERVICEABLE PARTS INSIDE. REFER ALL SERVICING TO QUALIFIED PERSONNEL.			
	This symbol indicates that high voltage is present inside. It is dangerous to make any kind of contact with any internal part of this product.		AC voltage: Rated voltage marked with this symbol is AC voltage.
	This symbol indicates that this product has included important literature concerning operation and maintenance.		DC voltage: Rated voltage marked with this symbol is DC voltage.
	Class II product: This symbol indicates that a safety connection to electrical earth (ground) is not required. If this symbol is not present on a product with a mains lead, the product MUST have a reliable connection to protective earth (ground).		Caution. Consult instructions for use: This symbol instructs the user to consult the user manual for further safety related information.

Electricity and Safety

Warning

- Do not use a damaged power cord or plug, or a loose power socket.
- Do not use multiple products with a single power socket.
- Do not handle the power plug with a wet body part.
- Insert the power plug all the way in so it is not loose.
- Connect the power plug to a grounded power socket (type 1 insulated devices only).
- Do not bend or pull the power cord with force. Be careful not to leave the power cord under a heavy object.
- Do not place the power cord or product near heat sources.
- Clean any dust around the pins of the power plug or the power socket with a dry cloth.

Caution

- Do not disconnect the power cord while the product is being used.
- Only use the power cord provided with your product by Samsung. Do not use the power cord with other products.
- Keep the power socket where the power cord is connected unobstructed.
  - The power cord must be disconnected to cut off power to the product when an issue occurs.
- Hold the plug when disconnecting the power cord from the power socket.

Installation

Warning

- DO NOT PLACE CANDLES, INSECT REPELLANTS OR CIGARETTES ON TOP OF THE PRODUCT. DO NOT INSTALL THE PRODUCT NEAR HEAT SOURCES.
- Do not install the product in poorly ventilated spaces such as a bookcase or closet.
- Install the product at least 10cm away from the wall to allow ventilation.
- Discard the plastic packaging that the product is packaged in, immediately after unpacking.
  - Plastic packaging material can cause suffocation if it is handled improperly.
- Do not install the product on an unstable or vibrating surface (insecure shelf, sloped surface, etc.)
  - The product may fall and become damaged and/or cause an injury.
  - Using the product in an area with excess vibration may damage the product or cause a fire.
- Do not install the product in a vehicle or a place exposed to dust, moisture (water drips, etc.), oil, or smoke.
- Do not expose the product to direct sunlight, heat, or a hot object such as a stove.
  - The product lifespan may be reduced or a fire may result.
- Edible oil, such as soybean oil, can damage or deform the product. Do not install the product in a kitchen or near a kitchen counter.

Caution

- Do not drop the product while moving.
- Do not set down the product on its front.
- When installing the product on a cabinet or shelf, make sure that the bottom edge of the front of the product is not protruding.
  - The product may fall and become damaged and/or cause an injury.
  - Install the product only on cabinets or shelves of the right size.
- Set down the product gently.
  - Product failure or personal injury may result.
- Installing the product in an unusual place (a place exposed to a lot of fine dust, chemical substances, extreme temperatures or a significant presence of moisture, or a place where the product will operate continuously for an extended period of time) may seriously affect its performance.
  - Be sure to consult Samsung Customer Service Center if you want to install the product at such a place.
- Before assembling the product, place the product down on a flat and stable surface so that the screen is facing downwards.
- In the same series, the color can vary depending on the size.

Operation

Warning

- There is a high voltage inside the product. Never disassemble, repair or modify the product yourself.
  - Contact Samsung Customer Service Center for repairs.
- To move the product, first disconnect all the cables from it, including the power cord.
- If the product generates abnormal sounds, a burning smell or smoke, disconnect the power cord immediately and contact Samsung Customer Service Center.
- Do not hang on to or climb on the product.
  - The product may tip over or fall, causing injury or death.
- If the product is dropped or the outer case is damaged, turn off the power and disconnect the power cord. Then contact Samsung Customer Service Center.
  - Continued use can result in a fire or electric shock.
- Do not put heavy objects, toys or snacks on top of the product.
  - Hanging on to the product to get a toy or snack may cause heavy objects to fall or the product to tip over, resulting in injury or death.
- During a lightning or thunderstorm, power off the product and remove the power cord.
- Do not drop objects on the product or apply impact.
- Do not move the product by pulling the power cord or any cable.
- If a gas leakage is found, do not touch the product or power plug. Also, ventilate the area immediately.
- Do not lift or move the product by pulling the power cord or any cable.
- Do not use or keep combustible spray or an inflammable substance near the product.
- Ensure the vents are not blocked by tablecloths or curtains.
  - An increased internal temperature may cause a fire.
- Do not insert metallic objects (chopsticks, coins, hairpins, etc) or objects that burn easily (paper, matches, etc) into the product (via the vent or input/output ports, etc).
  - Be sure to power off the product and disconnect the power cord when water or other foreign substances have entered the product. Then contact Samsung Customer Service Center.
- Do not place objects containing liquid (vases, pots, bottles, etc) or metallic objects on top of the product.
  - Be sure to power off the product and disconnect the power cord when water or other foreign substances have entered the product. Then contact Samsung Customer Service Center.
- Do not use liquid fumigators containing chemicals, such as mosquito repellent or air freshener, around the product.
  - If steam comes in contact with the product surface or enters the product, it may cause stains or malfunction.

Caution

- Leaving the screen fixed on a stationary image for an extended period of time may cause afterimage burn-in or defective pixels.
  - Set the screen to power-saving mode or moving-picture screen saver when not using the product for an extended period of time.
- Disconnect the power cord from the power socket if you do not plan on using the product for an extended period of time (vacation, etc).
  - Dust accumulation combined with heat can cause a fire, electric shock or electric leakage.
- Use the product at the recommended resolution and frequency.
  - Your eyesight may deteriorate.
- Do not put AC/DC adapters together.
- Remove the plastic bag from the AC/DC adapter before you use it.
- Do not let water enter the AC/DC adapter device or get the device wet.
  - An electric shock or fire may result.
  - Avoid using the product outdoors where it can be exposed to rain or snow.
  - Be careful not to get the AC/DC adapter wet when you wash the floor.
- Do not put the AC/DC adapter near to any heating apparatus.
  - Otherwise, a fire may result.
- Keep the AC/DC adapter in a well-ventilated area.
- If you place the AC/DC power adapter hanging with the cord input facing upwards, water or other foreign substances could enter the Adapter and cause the Adapter to malfunction.
  Make sure to rest the AC/DC power adapter flat on a table or the floor.
- Do not hold the product upside-down or move it by holding the stand.
  - The product may fall and become damaged or cause an injury.
- Looking at the screen too close for an extended period of time can deteriorate your eyesight.
- Do not use humidifiers or stoves around the product.
- Take a break for at least 5 minutes after using the product for 1 hour.
- Do not touch the screen when the product has been turned on for an extended period of time as it will become hot.
- Exercise caution when storing the remote control batteries and small accessories, so they are not swallowed.
  - If swallowed, consult a physician immediately.
- Exercise caution when adjusting the product angle.
  - Parts of the human body may become caught and could be injured.
  - Tilting the product at an excessive angle may cause the product to fall and an injury may result.
- Do not place heavy objects on the product.
  - Product failure or personal injury may result.
- When using headphones or earphones, do not turn the volume too high.
  - Having the sound too loud may damage your hearing.

Cleaning

High-glossy models can develop white stains on the surface if an ultrasonic wave humidifier is used nearby.

— Contact your nearest Samsung Customer Service Center if you want to clean the inside of the product (Service fee will be charged.)

Do not press the monitor screen. There is a risk of damaging it.

— Exercise care when cleaning as the panel and exterior of advanced LCDs are easily scratched.

Take the following steps when cleaning.

1 Power off the product and PC.

2 Disconnect the power cord from the product.

— When removing the power cord, hold the plug. Never hold the plug with a wet body part. Otherwise, an electric shock may result.

3 Wipe the product with a clean, soft and dry cloth.

Wet a soft cloth in water, wing it out well, and then use the cloth to wipe the exterior of the product clean.

– Do not apply a cleaning agent that contains alcohol, solvent, or surfactant to the product.
– Do not spray water or detergent directly on the product.

4 Connect the power cord to the product when cleaning is finished.

5 Power on the product and PC.

Correct posture to use the product



Use the product in the correct posture as follows:

- Straighten your back.
- Allow a distance of 45 to 50cm between your eye and the screen, and look slightly downward at the screen.
- Keep your eyes directly in front of the screen.
- Adjust the angle so light does not reflect on the screen.
- Keep your forearms perpendicular to your upper arms and level with the back of your hands.
- Keep your elbows at about a right angle.
- Adjust the height of the product so you can keep your knees bent at 90 degrees or more, your heels attached to the floor, and your arms lower than your heart.
- Do the Eye excercises or blink frequently, then eye fatigue will be relieved.

Preparations

Installation

Attaching the Stand

- The color and shape of parts may differ from what is shown. Specifications are subject to change without notice to improve quality.
- Disassembly is the reverse order of assembly.

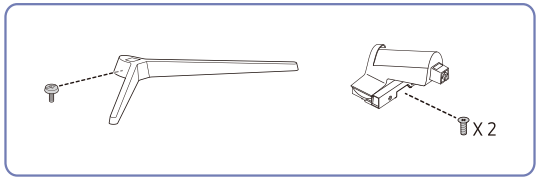

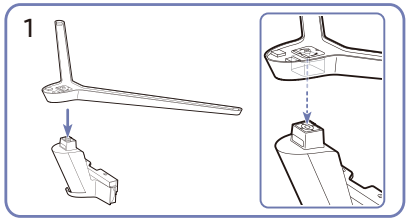

Put the stand base onto the stand neck as the direction shown in the figure. Check that the stand neck is firmly connected.

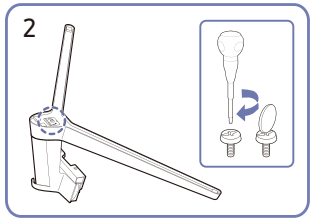

Tightly fasten the connecting screw at the bottom of the stand base.

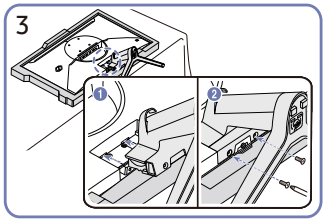

Place a soft cloth over the table to protect the product and place the product onto the cloth so that the front of the product is facing downwards. Push the assembled stand into the main body in the direction of the arrow as shown in the figure. Tightly fasten the connecting screw at the center of the stand neck.

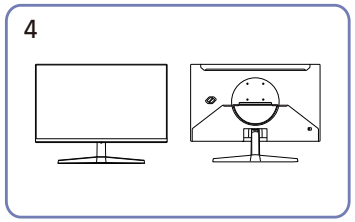

After installing the stand, place the product upright.

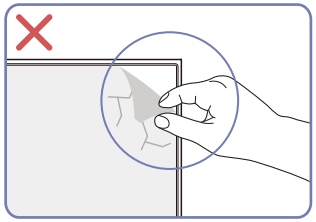

Caution

Do not arbitrarily remove the panel film. If not observed, the warranty service may be restricted.

Precautions for moving the product

The color and shape of parts may differ from what is shown. Specifications are subject to change without notice to improve quality.

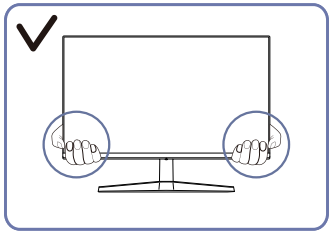

- Hold the lower corners or edges of the product when moving it.

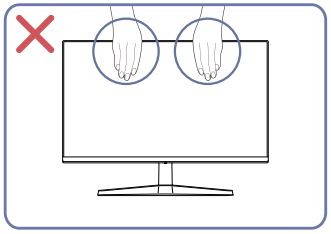

- Do not directly apply pressure on the screen.
- Do not hold the screen when moving the product.

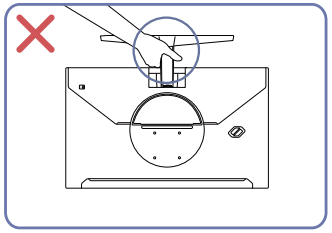

- Do not hold the product upside down only by the stand.

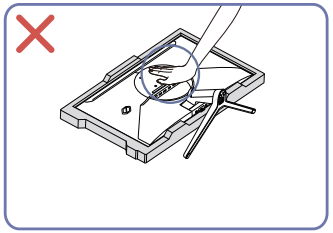

- Do not press down on the product. There is a risk of damaging the product.

Checking the space around the product

Make sure to have enough space for ventilation when placing the product. An internal temperature rise may cause fire and damage the product. Maintain enough space around the product as shown in the diagram when installing the product.

The exterior may differ depending on the product.

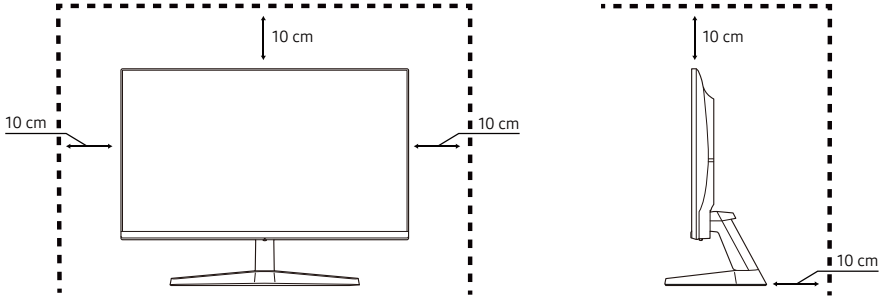

Adjusting the Product Tilt

— The color and shape of parts may differ from what is shown. Specifications are subject to change without notice to improve quality.

-2.0° (-1.0°~+2.0°) ~ +20.0° (±2.0°)

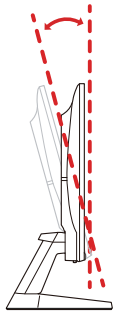

- The product tilt can be adjusted.
- Hold the top center of the product and adjust the tilt carefully.

Anti-theft Lock

— An anti-theft lock allows you to use the product securely even in public places.

— The locking device shape and locking method depend on the manufacturer. Refer to the manuals provided with your anti-theft locking device for details.

To lock an anti-theft locking device:

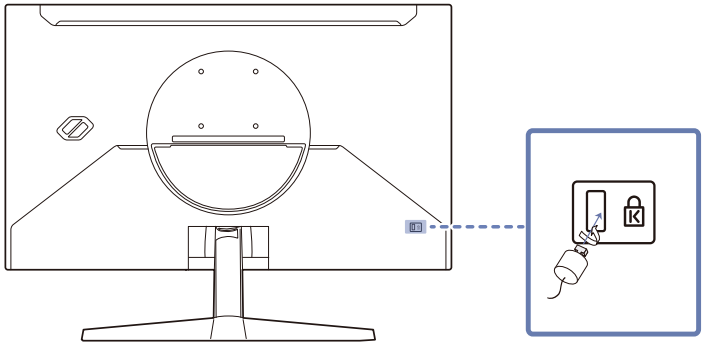

1 Fix the cable of your anti-theft locking device to a heavy object such as a desk.

2 Put one end of the cable through the loop on the other end.

3 Insert the locking device into the anti-theft lock slot at the back of the product.

4 Lock the locking device.

- An anti-theft locking device can be purchased separately.
- Refer to the manuals provided with your anti-theft locking device for details.
- Anti-theft locking devices can be purchased at electronics retailers or online.

Wall Mount Kit Specifications (VESA)

¯ Install your wall mount on a solid wall perpendicular to the floor. Before attaching the wall mount to surfaces other than plaster board, please contact your nearest dealer for additional information. If you install the product on a slanted wall, it may fall and result in severe personal injury. Samsung wall mount kits contain a detailed installation manual and all parts necessary for assembly are provided.

- Do not use screws that are longer than the standard length or do not comply with the VESA standard screw specifications. Screws that are too long may cause damage to the inside of the product.
- For wall mounts that do not comply with the VESA standard screw specifications, the length of the screws may differ depending on the wall mount specifications.
- Do not fasten the screws too firmly. This may damage the product or cause the product to fall, leading to personal injury. Samsung is not liable for these kinds of accidents.
- Samsung is not liable for product damage or personal injury when a non-VESA or non-specified wall mount is used or the consumer fails to follow the product installation instructions.
- Do not mount the product at more than a 15 degree tilt.
- Standard dimensions for wall mount kits are shown in the table below.

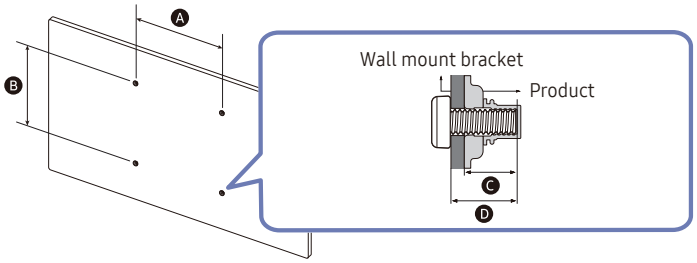

Model name	VESA screw hole specs (A * B) in millimeters	C	D	Standard Screw	Quantity
S27FG53*	75.0 x 75.0	8.0 ~ 10.0 mm	C + Wall mount bracket	M4	4

¯ Do not install your Wall Mount Kit while your product is turned on. It may result in personal injury due to electric shock.

Control Panel

- The color and shape of parts may differ from what is shown. Specifications are subject to change without notice to improve quality.
- You can turn on the product with the button, and then use the Function Key Guide. Function Key Guide appears when the button is pressed while the product is On.

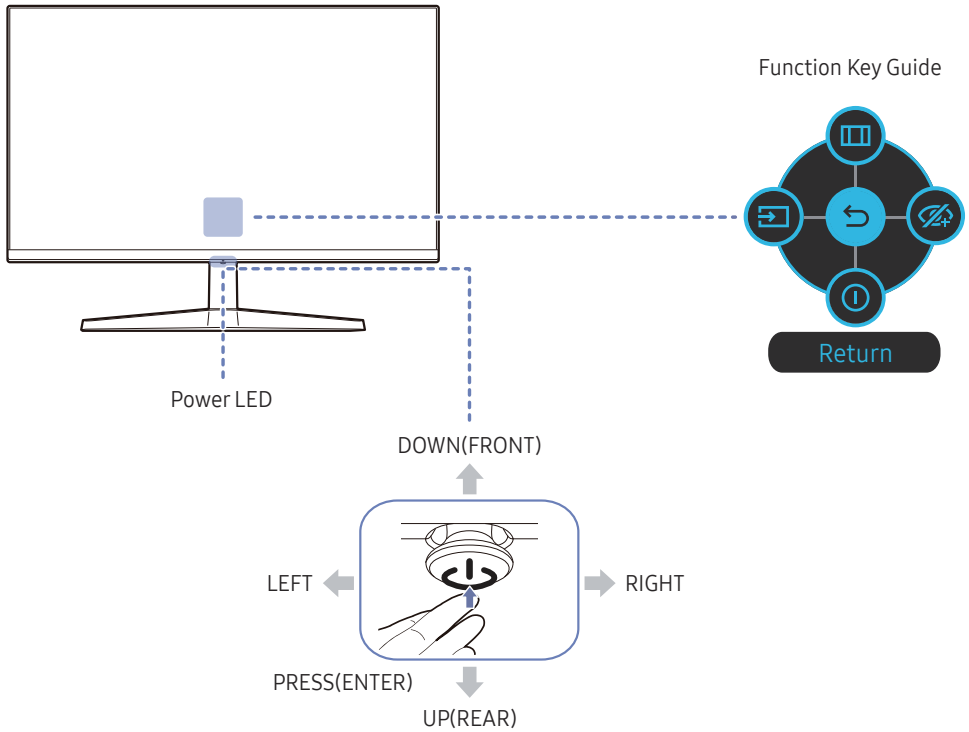

Parts	Description
	Use this multi-directional button to turn on the power or navigate menus.
Power LED	This LED is power status indicator. - You can select the power LED operation to be enabled or disabled on the menu screen. (→ System → Power LED On)
Function Key Guide	To use the Function Key Guide, press the JOG button when the screen is turned on.
Source	Changes the input source. A message will appear on the top left corner of the screen if the input source has been changed.
Menu	Displays the main on-screen menu.
Eye Saver Mode	Enables the Eye Saver Mode.
Power Off	Turns off the product.
Return	Exits from the menu page.

Connecting and Using a Source Device

Read below before connecting the product.

1 Before connecting the product, check the shapes of both ports of the supplied signal cables and the shapes and locations of the ports on the product and external device.

2 Before connecting the product, make sure you remove the power cables from both the product and the external device to prevent damage to the product due to a short circuit or over current.

3 After all signal cables have been properly connected, connect the power cables back to the product and the external device.

4 After connecting is completed, make sure you read the manuals to acquaint yourself with the product functions, precautions and other information required to use the product properly.

5 To use Max specifications of our products, check the support specifications of the cable version you use.

— Connecting parts may differ in different products.

— Provided ports may vary depending on the product.

Ports

— The functions available may vary depending on the product model. The color and shape of parts may differ from what is shown. Specifications are subject to change without notice to improve quality. Refer to the actual product.

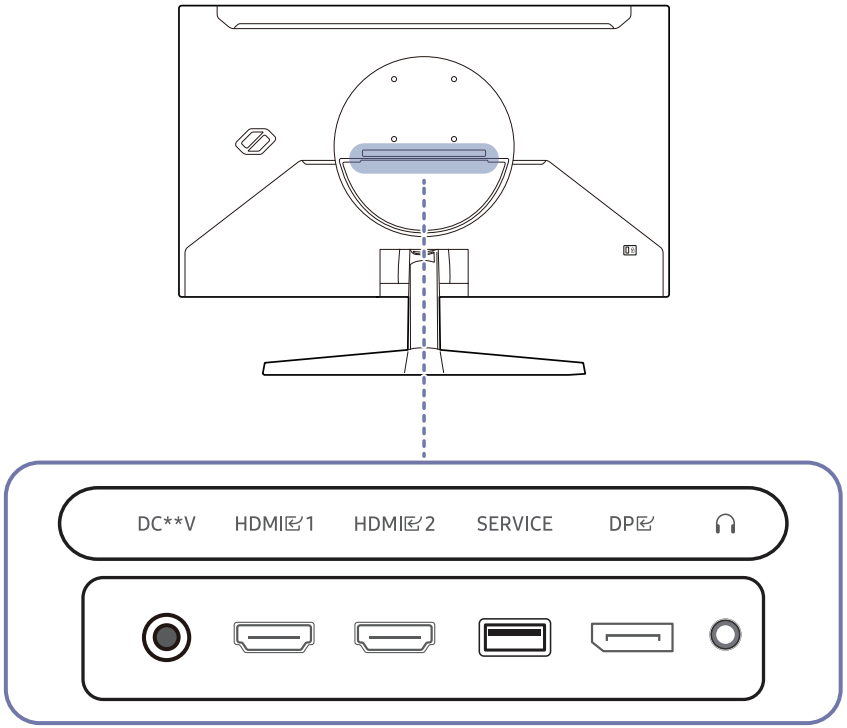

Port	Description
DC **V	Connects to the AC/DC adapter.
HDMI 1 HDMI 2	Connects to a source device using an HDMI cable.
SERVICE	Use a USB memory to perform software upgrade.
DP	Connects to a PC using a DP cable.
🎧	Connect to an audio output device such as headphones or earphones.

Connecting and Using a PC

Select a connection method suitable for your PC.

Connection Using the HDMI Cable



- It is recommended to use the HDMI cable provided as components. If not provided, be sure to use authorized cable for HDMI cable connections. If you use a unauthorized HDMI cable, the image quality may be degrade.

Connection Using an DP Cable



- It is recommended to use the DP cable provided as an accessory. If not provided, be sure to use a DP cable of 1.5 m or below.
- Use a VESA certified DP1.2 cable or higher and its gender.
- Even if the DP cable provided as an accessory is perfectly inserted into the set or external device, the cable insertion part may still be visible. However, this is not considered an issue.

Connecting to headphones or earphones



- Use headphones or earphones when activating sound with an HDMI-HDMI or DP cable.
- The headphones or earphones jack supports only the 3 conductor tip-ring-sleeve (TRS) type.

Connecting the Power

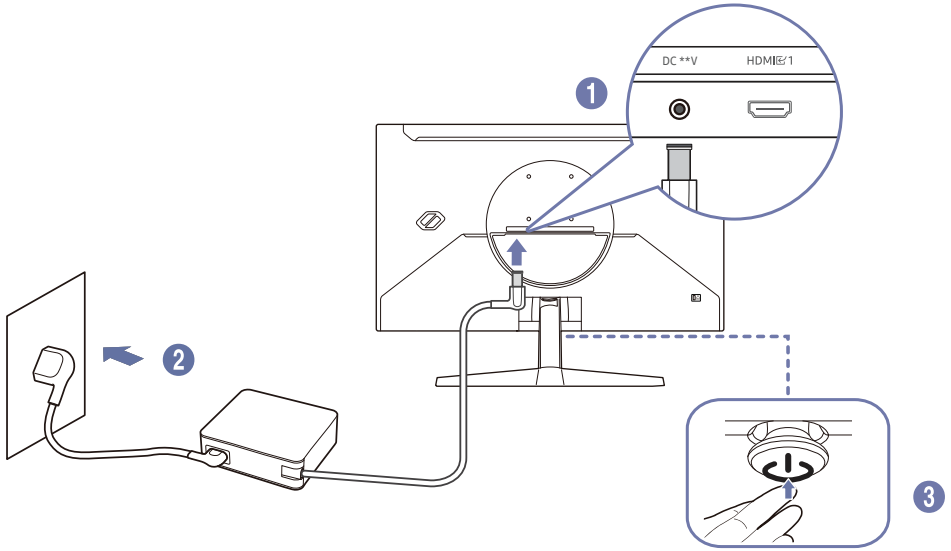

1 Connect the power cord to the AC/DC adapter. Then, connect the AC/DC adapter to the DC **V port on the back of the product.

- Rated power consumption for adapters differs depending on the model. Use an adapter that meets the power consumption specification of the model.

2 Next, connect the power cord to the power outlet.

3 Press the ⏻ button at the bottom of the product to turn it on.

- The input voltage is switched automatically.

Tidying Up the Cables

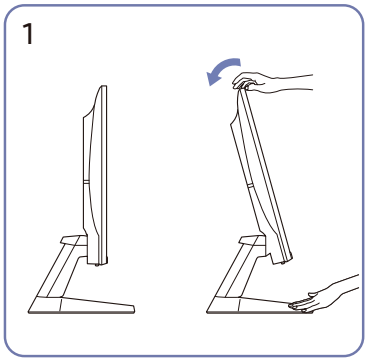

Tilt the display, as shown in the figure.

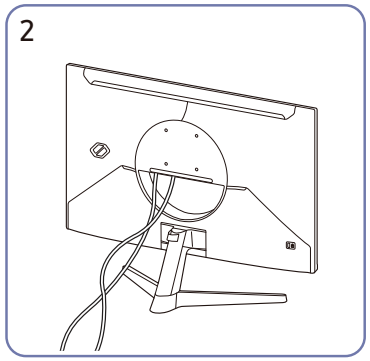

Connect the corresponding cables.

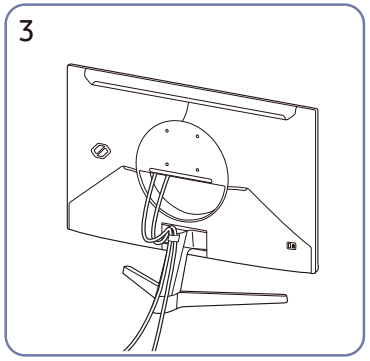

Put both cables in the cable holder on the stand (HOLDER-STAND CABLE) to organize the cables, as shown in the figure.

Assembly is complete.

Setting Optimum Resolution

An information message about setting optimum resolution will appear if you power on the product for the first time after purchase.

Select a language on information message and change the resolution on your PC to the optimum setting.

— If the optimum resolution is not selected, the message will appear up to three times for a specified time even when the product, is turned off and on again.

— If you want to set the optimum resolution for your computer. Please refer to (Q&A) → "How can I change the resolution?".

List of graphic cards supporting HDR10

HDR10 is accessible only on Windows 10 systems equipped with graphic cards that support Play Ready 3.0 Digital Rights Management (for protected HDR content). Use graphic cards listed below for HDR10.

- NVIDIA GeForce 1000 series or higher
- AMD Radeon™ RX 400 series or higher
- Intel UHD Graphics 600 series or higher

— Graphic cards that support hardware-accelerated 10-bit video decoding for HDR video codecs are recommended.

Menu

Function Key Guide →

— The functions available may vary depending on the product model. The color and shape of parts may differ from what is shown. Specifications are subject to change without notice to improve quality.

Game

2nd	Description
Refresh Rate	Change the screen refresh rate. A higher refresh rate can reduce eye strain. • DisplayPort: 60Hz / 120Hz / 144Hz / 200Hz • HDMI: 60Hz / 120Hz / 144Hz — This option is not available when FreeSync is set to On. — Changing the Refresh Rate may cause screen flickering, depending on the PC's graphics card. — The function is available in a PC equipped with the graphics card that can change the refresh rate. It is unavailable in the devices (e.g. AV devices) with fixed refresh rates. If the function is applied, the screen may have malfunction. — If the Refresh Rate function is in use and the text displayed on the PC screen looks blurry or corrupted, resolve the issue by changing the resolution of the PC screen to the recommended resolution.
Response Time	Accelerate the panel response rate to make video appear more vivid and natural. — It is best to set Response Time to Standard or Faster when you are not viewing a movie or game. — This option is not available when FreeSync is set to On. — When Eye Saver Mode is set to Low or High, the Extreme (MBR) menu is disabled. — The Extreme (MBR) menu is only available when Refresh Rate is set to 200Hz (DP) / 144Hz (HDMI).
FreeSync / FreeSync Premium	FreeSync technology is solution that eliminates screen tearing without all the usual lag and latency. FreeSync can be operated when you use AMD's graphic card with supporting FreeSync solution. For more information, see FreeSync (for AMD graphics card) page.
Black Equalizer	Adjust the brightness of the dark areas. As the value gets closer to 1, the darker areas of the screen become brighter, making it easier to find enemies when playing a game. To find enemies more easily during a game, use a lower value. As the value gets closer to 10, the darker areas of the screen become darker and the contrast increases. — This menu is not available when Eye Saver Mode is enabled. — This menu is not available when Picture Mode is set to Cinema mode. — This menu is not available when Picture Mode is set to Dynamic Contrast mode. — This menu is not available when the input signal is AV timing and the monitor is in AV mode.
Virtual Aim Point	• Off: Virtual Aim Point is not available while Off is selected. • / / / / / : Select the preferred aim point style. • Reset Position: Restore the aim point position to the default.

2nd	Description
Screen Size	Select the best screen size and ratio. — This option is not available when FreeSync is set to On. In PC mode • Auto: Display the picture according to the aspect ratio of the input source. • Wide: Display the picture in full screen regardless of the aspect ratio of the input source. In AV mode • 4:3: Display the picture with an aspect ratio of 4:3. Suitable for videos and standard broadcasts. • 16:9: Display the picture with an aspect ratio of 16:9. • Screen Fit: Display the picture with the original aspect ratio without cutting off. — The function may not be supported depending on the ports provided with the product. — Changing the Screen Size is available when the following conditions are satisfied. — The input signal is 480p, 576p, 720p, 1080p or 1440p and product can display normally (Not every model can support all of these signals.). — This can only be set when the external input is connected through HDMI/DP and PC/AV Mode is set to AV.

Picture

2nd	Description
Picture Mode	This menu provides an optimum picture quality suitable for the environment where the product will be used. — This menu is not available when Eco Saving Plus is enabled. — This menu is not available when Eye Saver Mode is enabled. In PC mode • Custom: Customize the screen settings. • FPS: Increase the brightness of darker areas of the FPS (First-Person Shooter) game screen. This mode increases visibility of your enemies during a FPS (First-Person Shooter) game. • RTS: Increase the color temperature and contrast ratio to improve visibility of the RTS (Real-Time Strategy) screen and minimap. • RPG: This mode is optimised for 3D graphics and instant messaging on the RPG (Role Playing Game) game screen. • AOS: Increase the contrast ratio to obtain a picture quality optimised for the AOS (Aeon Of Strife) game screen. • Cinema: Obtain the brightness and sharpness of monitors suitable for enjoying video and DVD content. • Dynamic Contrast: Obtain balanced brightness through automatic contrast adjustment.

2nd	Description
Picture Mode	In AV mode When the external input is connected through HDMI/DP and PC/AV Mode is set to AV, Picture Mode has four automatic picture settings (Dynamic, Standard, Movie and Custom) that are preset at the factory. You can activate either Dynamic, Standard, Movie or Custom. You can select Custom which automatically recalls your personalized picture settings. • Dynamic: Select this mode to view a sharper image than in Standard mode. • Standard: Select this mode when the surroundings are bright. • Movie: Select this mode when the surroundings are dark. This will save power and reduce eye fatigue. • Custom: Select this mode when you want to adjust the image according to your preferences. — The Picture Mode feature is only activated at a certain AV resolution, such as 720P @ 60Hz and 1080P @ 60Hz. In HDR mode Set to an optimum picture quality suitable for the working environment. – HDR Dynamic / HDR Standard.
Brightness	You can adjust the general brightness of the picture. (Range: 0~100) A higher value will make the picture appear brighter. — This menu is not available when Picture Mode is set to Dynamic Contrast mode. — This menu is not available when Eco Saving Plus is enabled. — This menu is not available when Eye Saver Mode is enabled. — This menu is not available when Response Time is set to Extreme (MBR) mode.

2nd	Description
Contrast	Adjust the contrast between the objects and background. (Range: 0~100) A higher value will increase the contrast to make the object appear clearer. — This option is not available when Picture Mode is in Cinema or Dynamic Contrast mode.
Sharpness	Make the outline of objects more clear or blurry. (Range: 0~100) A higher value will make the outline of objects clearer. — This option is not available when Picture Mode is in Cinema or Dynamic Contrast mode.
Color	Adjust the tint of the screen. • Color Tone: Select a color tone that best suits your viewing needs. — When the external input is connected through HDMI/DP and PC/AV Mode is set to AV (720P @ 60Hz and 1080P @ 60Hz), Color Tone has four color temperature settings (Cool, Normal, Warm and Custom). • Red: Adjust the red saturation level. Values closer to 100 mean greater intensity for the color. • Green: Adjust the green saturation level. Values closer to 100 mean greater intensity for the color. • Blue: Adjust the blue saturation level. Values closer to 100 mean greater intensity for the color. • Gamma: Adjust the middle level of luminance. • Saturation: Adjust the saturation level. Values closer to 100 mean greater intensity for the color. — This menu is not available when Picture Mode is set to Cinema or Dynamic Contrast mode. — This menu is not available when Eye Saver Mode is enabled.

2nd	Description
Black Level	If a DVD player or set-top box is connected to the product via HDMI, image quality degradation (contrast/color degradation, black level, etc.) may occur, depending on the connected source device. In such case, Black Level can be used to adjust the image quality. • Auto: Select this mode if you want Normal or Low to be automatically selected depending on the signal. • Normal: Select this mode when there is no contrast ratio degradation. • Low: Select this mode to reduce the black level and increase the white level when there is a contrast ratio degradation. — This function is only available in HDMI1 or HDMI2 mode. — Black Level may not be compatible with some source devices. — The Black Level feature is only activated at a certain AV resolution, such as 720P @ 60Hz and 1080P @ 60Hz. — Adjust the Black Level because the image quality may differ depending on the external device.
Eye Saver Mode	Set to an optimum picture quality suitable for eye relaxation.

OnScreen Display

2nd	Description
Language	Set the menu language. — A change to the language setting will only be applied to the onscreen menu display. — It will not be applied to other functions on your PC.
Display Time	The OSD menu will automatically disappear if the menu is not used for a specified period of time. Display Time is a function to specify the time which you want the OSD menu to disappear.

System

2nd	Description
Volume	Adjust the Volume controlling the button LEFT/RIGHT. — To activate the Mute function, access the Volume control screen, then use the button to move the focus down. To deactivate the Mute function, access the Volume control screen, then increase or decrease the Volume.
Eco Saving Plus	The Eco Saving Plus function reduce power consumption by controlling the electric current used by the monitor panel. • Off: Deactivate the Eco Saving Plus function. • Auto: The power consumption will automatically be reduced by about 10% over the current setting. (The reduction of power consumption depends on the customer screen brightness condition.) • Low: Saves up to 25 % energy compared to the maximum brightness. • High: Saves up to 50 % energy compared to the maximum brightness. — This option is not available when Picture Mode is in Dynamic Contrast mode. — This menu is not available when Eye Saver Mode is enabled.

2nd	Description
Off Timer Plus	Off Timer • Off Timer: Turn on Off Timer mode. • Turn Off After: The off timer can be set within a range of 1 to 23 hours. The product will automatically power off after the specified number of hours. — This option is only available when Off Timer is set to On. — For products for the market in some regions, the Off Timer is set to automatically activate 4 hours after the product powers on. This is done in accordance with power supply regulations. If you do not want the timer to activate, go to → System → Off Timer Plus and set Off Timer to Off. Eco Timer • Eco Timer: Turn on Eco Timer mode. • Eco Off After: The Eco Timer can be set between 10 and 180 minutes. The product will automatically power off after the specified time has elapsed. — This option is only available when Eco Timer is set to On.
PC/AV Mode	Set PC/AV Mode to AV. The picture size will be enlarged. This option is useful when you view a movie. — Products with a display area of 16:9 or 16:10 are only supported. — If the product is in HDMI1, HDMI2, DisplayPort mode and the screen says Check the cable connection and the settings of the source device. press the button to display the Function Key Guide screen and then select → System → PC/AV Mode → HDMI1, HDMI2, DisplayPort → PC or AV.

2nd	Description
DisplayPort Ver.	Select your Displayport. — Incorrect settings may cause the screen to go blank. If this occurs, check the device specifications. — If setting the DisplayPort Ver. to 1.1, for the bandwidth limitation of the DisplayPort 1.1 protocol, the actual maximum output refreshing rate of the graphics cards cannot achieve the level of 120 Hz / 144 Hz / 200 Hz. — If the PC has entered BIOS mode and the BIOS screen does not appear, go to the following path and then select the mode. → System → DisplayPort Ver..
Input Port Ver.	Select an HDMI version. (1.4 / 2.0) — The supportable device and resolution may differ depending on its version. — When the version is changed, the screen may blink. — If you set the HDMI mode to 1.4, some high resolutions may not be supported because of bandwidth limitation of the HDMI 1.4 protocol. — When the setting is not appropriate, a blank screen may appear. In this case, check the specifications of the device. — Set HDMI mode to 1.4 if the monitor is connected to an HDMI device and the monitor does not display the screen properly, displays a blank screen, or does not play sound at all.
Auto Source Switch	By activating, a new connected source is displayed automatically. — This function may not be supported depending on the model or geographical area.
Key Repeat Time	Control the response rate of a button when the button is pressed. Acceleration, 1 sec, or 2 sec can be selected. If No Repeat is selected, a command responds only once when a button is pressed.
Power LED On	Configure the settings to enable or disable the power LED located at the lower part of the product. • Working: The power LED is on when the product is turned on. • Stand-by: The power LED is on when the product is turned off.

Support

2nd	Description
Self Diagnosis	Perform this test when you experience a problem with your monitor's picture. — Never turn off the power nor change the input source during self diagnosis. If possible, try not to interrupt testing.
Software Update	Update software using an update file on a USB device. 1 Save the update file (in .bin or .img format) that you downloaded from the Samsung website (http://www.samsung.com) to a USB storage device. 2 Connect the USB device to the SERVICE port on the monitor. Select → Support → Software Update. 3 Follow the instructions on the screen to proceed with update. 4 Your product will turn itself off and on again automatically after completing update, and then turn off your product. 5 Remove the power cord from the power outlet and then reconnect the cord after turning off. — To perform software update by using a USB memory, first format the USB memory to FAT32. — When performing update, make sure that only one BIN or IMG file (.bin or .img) is saved in the root directory. — Upon updates, save only either the .bin or .image file, downloaded from the Samsung website, to the root directory. — If the No update files found on your USB device. Please check your USB device and try again. message is displayed, this is probably due to the following reasons. — A USB memory is not connected to the port. — The files in the connected USB memory are not compatible formats. — There are no valid update files found in the connected USB memory. (There are no update files saved in the memory or the file names are incorrect.)

2nd	Description
Software Update	— Do not turn off the product until the update is complete. And prevent the updating from any interruption as far as possible. In general, the product returns to the previous version if an update is interrupted. — It may change the screen color or blink during USB update, but it is not a monitor problem. Since S/W update is performed normally, please wait until the update is finished.
Information	View product information like model name.
Reset All	Return all the settings for the product to the default factory settings.

Installing the Software

Easy Setting Box



Easy Setting Box enables users to use the monitor by partitioning multiple sections.

To install the latest version of **Easy Setting Box**, download it from the Samsung website (http://www.samsung.com).

— The software may not work properly if you do not restart the PC after the installation.

— The **Easy Setting Box** icon may not appear depending on the PC system and the product specifications.

— If the shortcut icon does not appear, press the F5 key.

Restrictions and Problems with the Installation

The **Easy Setting Box** installation may be affected by the Graphics Card, Motherboard and the Networking Environment.

System Requirements

OS	Hardware
• Windows 7 32Bit/64Bit • Windows 8 32Bit/64Bit • Windows 8.1 32Bit/64Bit • Windows 10 32Bit/64Bit • Windows 11 32Bit/64Bit	• At least 32MB of memory • At least 60MB of free space on the hard disk drive

Driver Installation

To install the latest version of the product driver, download it from the Samsung website (http://www.samsung.com).

— You can set the optimum resolution and frequency for this product by installing the corresponding drivers.

Troubleshooting Guide

Requirements Before Contacting Samsung Customer Service Center

— Before calling Samsung Customer Service Center, test your product as follows. If the problem persists, contact Samsung Customer Service Center.

Product diagnosis (Screen issue)

If a problem occurs with the product screen, run Self Diagnosis to check that the product is working properly.

Checking the Resolution and Frequency

If a resolution that is not supported (see the Standard Signal Mode Table) is selected, the Not Optimum Mode message may appear for a short time or the screen may not be displayed properly.

— The displayed resolution may vary, depending on the PC system settings and cables.

Check the following.

Caution

When the product makes popping (cracking) sound.

The sound may be caused by contraction or expansion from temperature change of external components or internal circuit of the product.

This is NOT a product failure and does not affect the life of the product.

The product is getting hot.

It is normal for the product to generate some heat when used. The product has been tested and proven to be safe. You can use it with confidence. The heat generated by the product when used does not affect its performance or lifespan.

Installation issue (PC mode)

Blank spaces are found on all four sides of the screen when an HDMI cable is connected to the product and PC.

The blank spaces found on the screen have nothing to do with the product.

Blank spaces on the screen are caused by the PC or graphics card. To resolve the problem, adjust the screen size in the HDMI settings for the graphics card.

If the graphics card settings menu does not have an option to adjust the screen size, update the graphics card driver to the latest version.

(Please contact the graphics card or PC manufacturer for further details about how to adjust the screen settings.)

Screen issue

The power LED is off. The screen will not switch on.

Check that the power cord is connected properly.

If a problem occurs with the product screen, run Self Diagnosis to check that the product is working properly.

The message Check the cable connection and the settings of the source device. appears.

Check that the cable is properly connected to the product.

If the monitor is in HDMI1, HDMI2 or DisplayPort mode, press the button to display the Function Key Guide screen and select the → System → PC/AV Mode → HDMI1, HDMI2, DisplayPort → PC or AV.

Not Optimum Mode is displayed.

This message appears when the signal from the graphics card exceeds the maximum resolution or frequency for the product.

Change the maximum resolution and frequency to suit the product performance, referring to Standard Signal Mode Table (P.31).

The images on the screen look distorted.

Check the cable connection to the product.

The screen is not clear. The screen is blurry.

Remove any accessories (video extension cable, etc.) and try again.

Set the resolution and frequency to the recommended level.

The screen appears unstable and shaky. There are shadows or ghost images left on the screen.

Check that the resolution and frequency for the PC are within the range of resolution and frequency compatible with the product. Next, if required, change the settings, referring to Standard Signal Mode Table (P.31) in this manual and the Information menu on the product.

— Available functions may differ depending on the model.

The screen is too bright. The screen is too dark.

Adjust Brightness and Contrast.

Screen color is inconsistent.

Change the Color settings.

The colors on the screen have a shadow and are distorted.

Change the Color settings.

White does not really look white.

Change the Color settings.

There is no image on the screen and the power LED blinks every 0.5 to 1 second.

Check the cable connection between the product and PC, and ensure the connectors are locked.

Press any key on the keyboard or move the mouse to return to normal operating mode.

The product is operating in power-saving mode.

Text is blurry.

If using a Windows OS (e.g. Windows 7, Windows 8, Windows 8.1 or Windows 10): Go to **Control Panel** → **Fonts** → **Adjust ClearType text** and change **Turn on ClearType**.

Video playback is choppy.

Playback of high-definition large video files can be choppy. This may be because the video player is not optimised for the PC resource.

Try playing the file on another video player.

The screen blinks when the Extreme (MBR) menu is selected.

Confirm that the scan rate of the computer is 144Hz / 200Hz.

Sound issue

There is no sound.

Re-check the condition of the connected headphone or earphone or adjust the volume.

Check the volume.

Check whether the volume of the product or the source device is set to mute.

The volume is too low

Adjust the volume.

If the volume is still low after turning it up to the maximum level, adjust the volume on your PC sound card or software.

Video is available but there is no sound.

Sound cannot be heard if an HDMI-DVI cable is used to connect the input device.

Connect the device using an HDMI cable or a DP cable.

Source device issue

A beeping sound is heard when my PC is booting.

If a beeping sound is heard when your PC is booting, have your PC serviced.

Q & A

¯ Refer to the user manual for your PC or graphics card for further instructions on adjustment.

¯ The path to the settings depends on the installed OS.

¯ This function may not be supported depending on the model.

How can I change the frequency?

Set the frequency on your graphics card.

- Windows 7: Go to **Control Panel** → **Appearance and Personalization** → **Display** → **Screen Resolution** → **Advanced settings** → **Monitor**, and adjust **Screen Refresh Rate** under **Monitor settings**.
- Windows 8(Windows 8.1): Go to **Settings** → **Control Panel** → **Appearance and Personalization** → **Display** → **Screen Resolution** → **Advanced settings** → **Monitor**, and adjust **Refresh rate** under **Monitor settings**.
- Windows 10: Go to **Settings** → **System** → **Display** → **Advanced display settings** → **Display adapter properties** → **Monitor**, and adjust **Screen refresh rate** under **Monitor settings**.

How can I change the resolution?

- Windows 7: Go to **Control Panel** → **Appearance and Personalization** → **Display** → **Screen Resolution** → **Adjust Resolution**.
- Windows 8(Windows 8.1): Go to **Settings** → **Control Panel** → **Appearance and Personalization** → **Display** → **Adjust Resolution**, and adjust the resolution.
- Windows 10: Go to **Settings** → **System** → **Display** → **Advanced display settings**, and adjust the resolution.

How do I set power-saving mode?

- Windows 7: Go to **Control Panel** → **Appearance and Personalization** → **Personalize** → **Screen Saver Settings** → **Power options** or BIOS SETUP on the PC.
- Windows 8(Windows 8.1): Go to **Settings** → **Control Panel** → **Appearance and Personalization** → **Personalize** → **Screen Saver Settings** → **Power options** or BIOS SETUP on the PC.
- Windows 10: Go to **Settings** → **Personalization** → **Lock screen** → **Screen timeout settings** → **Power & sleep** or BIOS SETUP on the PC.

Specifications

General

Model Name	S27FG53*
Maximum Pixel Clock	810.56 MHz
Size	27 Class (26.9 Inches / 68.4 cm)
Display area	596.736 mm (H) x 335.664 mm (V)
Pixel Pitch	0.2331 mm (H) x 0.2331 mm (V)
Power Supply	AC 100 - 240 V~, 50/60 Hz Based on the AC voltage of the adapter. For the DC voltage of the product, refer to the product label.
Signal connectors	HDMI, DisplayPort
Environmental conditions	**Operating** Temperature: 50 °F – 104 °F (10 °C – 40 °C) Humidity: 10% – 80%, non-condensing
	Storage Temperature: -4 °F – 113 °F (-20 °C – 45 °C) Humidity: 5% – 95%, non-condensing

- Plug-and-Play

  This product can be installed and used with any Plug-and-Play compatible systems. Two-way data exchange between the product and PC system optimizes the product settings. Product installation takes place automatically. However, you can Customize the installation settings if desired.

- Panel Dots (Pixels)

  Due to the nature of the manufacturing of this product, approximately 1 pixel per million (1ppm) may be brighter or darker on the LCD panel. This does not affect product performance.

- Audio is played with the same sound settings as the connected device. Audio sound settings (e.g. the bit and sample rates) can be changed from the connected device.
- The above specifications are subject to change without notice to improve quality.
- For detailed device specifications, visit the Samsung website.
- Open Source Licence Notice

  Open Source used in this product can be found on the following webpage (https://opensource.samsung.com).

The terms HDMI, HDMI High-Definition Multimedia Interface, HDMI trade dress and the HDMI Logos are trademarks or registered trademarks of HDMI Licensing Administrator, Inc.

AMD FreeSync Premium

¯ This license may not be supported depending on the model or geographical area. Please refer to the samsung.com website for detailed information regarding FreeSync.

(USA only)
Dispose unwanted electronics through an approved recycler. To find the nearest recycling location, go to our website: www.samsung.com/recycling or call, 1-800-Samsung

For battery recycling go to call2recycle.org or call 1-800-822-8837

Standard Signal Mode Table

Model Name		S27FG53*
Synchronization (PANEL Spec)	Horizontal Frequency	70.5 ~ 301 kHz
	Vertical Frequency	48 ~ 200 Hz
Resolution	Optimum Resolution	2560 x 1440 @ 144Hz (HDMI) 2560 x 1440 @ 200Hz (DP)
	Maximum Resolution	

If a signal that belongs to the following standard signal modes is transmitted from your PC, the screen will automatically be adjusted. If the signal transmitted from the PC does not belong to the standard signal modes, the screen may be blank even though the power LED turns on. In such a case, change the settings according to the following table by referring to the graphics card user manual.

Resolution	Horizontal Frequency (kHz)	Vertical Frequency (Hz)	Pixel Clock (MHz)	Sync Polarity (H/V)	Port	
					HDMI IN	DP IN
IBM, 720 x 400	31.469	70.087	28.322	-/+	O	O
MAC, 640 x 480	35.000	66.667	30.240	-/-	O	O
MAC, 832 x 624	49.720	74.550	57.280	-/-	O	O
MAC, 1152 x 870	68.681	75.062	100.000	-/-	O	O
VESA, 640 x 480	31.469	59.940	25.175	-/-	O	O
VESA, 640 x 480	37.861	72.809	31.500	-/-	O	O
VESA, 640 x 480	37.500	75.000	31.500	-/-	O	O
VESA, 800 x 600	35.156	56.250	36.000	+/+	O	O
VESA, 800 x 600	37.879	60.317	40.000	+/+	O	O
VESA, 800 x 600	48.077	72.188	50.000	+/+	O	O
VESA, 800 x 600	46.875	75.000	49.500	+/+	O	O
VESA, 1024 x 768	48.363	60.004	65.000	-/-	O	O
VESA, 1024 x 768	56.476	70.069	75.000	-/-	O	O
VESA, 1024 x 768	60.023	75.029	78.750	+/+	O	O

Resolution	Horizontal Frequency (kHz)	Vertical Frequency (Hz)	Pixel Clock (MHz)	Sync Polarity (H/V)	Port	
					HDMI IN	DP IN
VESA, 1152 x 864	67.500	75.000	108.000	+/+	O	O
VESA, 1280 x 720	44.955	59.940	74.176	+/+	O	O
VESA, 1280 x 800	49.702	59.810	83.500	-/+	O	O
VESA, 1280 x 1024	63.981	60.020	108.000	+/+	O	O
VESA, 1280 x 1024	79.976	75.025	135.000	+/+	O	O
VESA, 1440 x 900	55.935	59.887	106.500	-/+	O	O
VESA, 1600 x 900	60.000	60.000	108.000	+/+	O	O
VESA, 1680 x 1050	64.674	59.883	119.000	+/-	O	O
VESA, 1920 x 1080	56.250	50.000	148.500	+/+	O	O
VESA, 1920 x 1080	67.500	60.000	148.500	+/+	O	O
VESA, 1920 x 1080	135.000	120.000	297.000	+/+	O	O
Custom, 1920x1080@144Hz	162.000	144.000	336.960	+/-	O	O
Custom, 1920x1080@200Hz	225.000	200.000	468.000	+/-	-	O
Custom, 2560x1440@60Hz	88.790	59.9510	241.500	+/-	O	O
Custom, 2560x1440@120Hz	183.000	120.000	497.760	+/-	O	O
Custom, 2560x1440@144Hz	214.560	144.000	583.600	+/-	O	O
Custom, 2560x1440@200Hz	298.000	200.000	810.56	+/-	-	O
VESA, 3840x2160@60Hz	135.000	60.000	594.000	+/+	O	-

— Horizontal Frequency
The time required to scan a single line from the left to the right side of the screen is called a horizontal cycle. The reciprocal number of a horizontal cycle is called horizontal frequency. Horizontal frequency is measured in kHz.

— Vertical Frequency
Repeating the same picture dozens of times per second allows you to view natural pictures. The repeat frequency is called "vertical frequency" or "refresh rate" and is indicated in Hz.

— This product can be set to only one resolution for each screen size to obtain the optimum picture quality due to the nature of the panel. Using a resolution other than the specified resolution may degrade the picture quality.
To avoid this, it is recommended that you select the optimum resolution specified for your product.

— Some resolutions listed in the table above may not be available depending on graphics card specifications.

Appendix

Responsibility for the Pay Service (Cost to Customers)

When the service is requested, in spite of in warranty, we may charge you for a visit from a service technician in the following cases.

Not a product defect

Cleaning of the product, Adjustment, Explanation, Re-installation and etc.

- If a service technician is requested to give instructions on how to use product or simply adjusts options without disassembling product.
- If a defect is caused by external environmental factors (Internet, Antenna, Wired Signal, etc.)
- If a product is reinstalled or devices are connected additionally after installing the purchased product for the first time.
- If a product is reinstalled to move to a different spot or to move to a different house.
- If the customer requests instructions on how to use another company's product.
- If customer requests instructions on how to use the network or another company's Program.
- If customer requests software installation and setup for the product.
- If a service technician removes/cleans dusts or foreign materials inside of the product.
- If customer requests an installation additionally after purchasing a product through home-shopping or online.

A Product damage caused by customer's fault

Product damage caused by customer's mishandling or wrong repair

If a product damage is caused by;

- External impact or drop.
- Use of supplies or separately sold product unspecified by Samsung.
- Repair from a person besides an engineer of outsourcing service company or partner of Samsung Electronics Co., Ltd.
- Remodeling or repairing the product by customer.
- Using it with incorrect voltage or non-authorized electrical connections.
- Not following the "cautions" in User Manual.

Others

- If product fails by natural disaster. (lightning, fire, earthquake, flood damage, etc)
- If consumable components are all used up.
  (Battery, Toner, Fluorescent lights, Head, Vibrator, Lamp, Filter, Ribbon, etc.)

If customer requests a service in case the product has no defect, service fee may be charged. So please read User Manual first.

FreeSync (for AMD graphics card)

FreeSync technology is solution that eliminates screen tearing without all the usual lag and latency. This feature will eliminate screen tearing and lag during game play. Improve your gaming experience. The displayed FreeSync menu items on the monitor may vary, depending on the monitor model and compatibility with the AMD graphics card.

— Monitor can support FreeSync Premium in DisplayPort mode.

- Off: Disable FreeSync.
- On: Turn on the AMD graphics cards' FreeSync function. You may experience intermittent flickers when playing some games.

Apply the optimum resolution when using FreeSync.

The refresh rate setting method please refer to Q & A → How can I change the frequency?

— This menu is not available when PC/AV Mode is set to AV.

— The FreeSync function is only enabled in HDMI1, HDMI2 or DisplayPort mode.

Use the HDMI/DP cable provided by the manufacturer when using FreeSync.

— If the FreeSync function is in use and the text displayed on the PC screen looks blurry or corrupted, resolve the issue by changing the resolution of the PC screen to the recommended resolution.

— If the DisplayPort Ver. is set to 1.1, the FreeSync Premium mode is disabled.

— If you set the HDMI Mode to 1.4, the FreeSync mode is disabled.

If you use the FreeSync function while playing a game, the following symptoms may occur:

- The screen may flicker depending on the type of graphics card, the game option settings, or the video being played. Try the following actions: decrease the game setting values, change the current FreeSync mode to Off, or visit the AMD website to check your graphics driver's version and update it with the latest one.
- While you are using the FreeSync function, the screen may flicker due to variation of the output frequency from the graphics card.
- The response rate during the game may fluctuate depending on the resolution. A higher resolution generally decreases the response rate.
- The sound quality of the monitor may be degraded.

— If you encounter any issues when using the function, contact the Samsung Service Center.

— If you change the screen resolution while the function is On, the screen may intermittently blank out due to the graphic card. Set FreeSync to Off and change the resolution.

— The function is unavailable in the devices (e.g. AV devices) that have no AMD graphic card. If the function is applied, the screen may have malfunction.

The models in the Graphic Cards list supports FreeSync

FreeSync can only be used with specific AMD graphics card models. Refer to the following list for supported graphics cards:

Make sure to install the latest official graphics drivers from AMD that support FreeSync.

— For additional AMD graphics card models that support the FreeSync feature, visit the official AMD website.

— Select FreeSync Off if you are using a graphics card from a different manufacturer.

— When applying the FreeSync function via the HDMI cable, it may fail to work due to the bandwidth limitation of certain AMD graphics card.

- Radeon™ RX Vega series
- Radeon™ RX 500 series
- Radeon™ RX 400 series
- Radeon™ R9/R7 300 series (excluding R9 370/X, R7 370/X, R7 265)
- Radeon™ Pro Duo (2016 edition)
- Radeon™ R9 Nano series
- Radeon™ R9 Fury series
- Radeon™ R9/R7 200 series (excluding R9 270/X, R9 280/X)