Dishwasher

User manual

DW90H79****/DW80H77****/DW80H73****/DW80H72****

SAMSUNG

Untitled-2 1 2026-05-26 5:39:19

Contents

Safety information **4**

What you need to know about safety instructions 4
Important safety symbols 4
Important safety precautions 5
Instructions when using your dishwasher 5
Instructions for protecting your children 6
Instructions for installing your dishwasher 7
Instructions about the WEEE 9

Product overview **10**

Dishwasher at a glance 10

Preparing the installation **11**

Installation kit (provided) 11
Required tools and parts (not provided) 14
Installation requirements 15

Installation **17**

Step-by-step installation 17
Installing the free standing model under the sink 27
Finalizing the installation 28

Before you start **47**

Unsuitable items for the dishwasher 47
Basic use of racks 48
Detergent compartment 57
Rinse aid compartment 60
Salt storage 61
SmartThings 62
Open Source Announcement 66

Operations **67**

Control panel 67
Icon descriptions 68
Cycle overview 69
Operating a cycle 71
Settings 72
Special features 74

Untitled-2 2 2026-05-26 5:39:19

Maintenance 76

Cleaning 76
Long-term care 82

Troubleshooting 83

Checkpoints 83
Information codes 86

Appendix 87

Cycle chart 87
Transportation/relocation 94
Protection against frost 94
Disposing the dishwasher and helping the environment 94
Energy, water saving tip 95
EPREL information 95
Specifications 96

For standard test 99

DW90H79**** Series 99
DW80H77**** Series 101
DW80H73**** Series 103
DW80H72**** Series 105

Contact information 107

QUESTIONS OR COMMENTS? 107

Untitled-2 3 2026-05-26 5:39:19

Safety information

Congratulations on your new Samsung dishwasher. This manual contains important information on the installation, use, and care of your appliance. Please take time to read this manual to take full advantage of your dishwasher's many benefits and features.

What you need to know about safety instructions

Please read this manual thoroughly to ensure that you know how to safely and efficiently operate the extensive features and functions of your new appliance and retain it at a safe place near the appliance for your future reference. Use this appliance only for its intended purpose as described in this user manual.

Warning and important safety instructions in this manual do not cover all possible conditions and situations that may occur. It is your responsibility to use common sense, caution, and care when installing, maintaining, and operating your dishwasher.

Because the following operating instructions cover various models, the characteristics of your dishwasher may differ slightly from those described in this manual and not all warning signs may be applicable. If you have any questions or concerns, contact your nearest service centre or find help and information online at www.samsung.com.

Important safety symbols

What the icons and signs in this user manual mean:

⚠ WARNING

Hazards or unsafe practices that may result in **severe personal injury, death, or property damage**.

⚠ CAUTION

Hazards or unsafe practices that may result in **personal injury or property damage**.

NOTE

Indicates that a risk of personal injury or material damage exists.

These warning symbols are here to prevent injury to you and others. Please follow them explicitly.

Keep these instructions in a safe place and ensure that new users are familiar with the content. Pass them on to any future owner.

Untitled-2 4 2026-05-26 5:39:20

Important safety precautions

To reduce the risk of fire, electric shock, or injury to persons when using your appliance, follow basic precautions, including the following:

1. This appliance is not intended for use by persons (including children) with reduced physical, sensory or mental capabilities, or lack of experience and knowledge, unless they have been given supervision or instruction concerning use of the appliance by a person responsible for their safety.
2. **For use in Europe**: This appliance can be used by children aged from 8 years and above and persons with reduced physical, sensory or mental capabilities or lack of experience and knowledge if they have been given supervision or instruction concerning use of the appliance in a safe way and understand the hazards involved. Children shall not play with the appliance. Cleaning and user maintenance shall not be made by children without supervision.
3. Children should be supervised to ensure that they do not play with the appliance.
4. If the supply cord is damaged, it must be replaced by the manufacturer, its service agent or similarly qualified persons in order to avoid a hazard.
5. The new hose-sets supplied with the appliance are to be used and that old hose-sets should not be reused.
6. For appliances with ventilation openings in the base, a carpet must not obstruct the openings.
7. Children of less than 3 years should be kept away from the appliance unless continuously supervised.
8. **CAUTION**: In order to avoid a hazard caused by inadvertent resetting of the thermal cut-out, this appliance must not be supplied through an external switching device, such as a timer, or connected to a circuit that is regularly switched on and off by the utility.
9. **WARNING**: Knives and other utensils with sharp points must be loaded in the basket with their points down or placed in a horizontal position.

This appliance is solely intended to be used in household and similar applications such as:

- Staff kitchen areas in shops, offices, and other working environments;
- Farm houses;
- Clients in hotels, motels, and other residential type environments;
- Bed and breakfast type environments.

Instructions when using your dishwasher

It must only be used as an appliance as specified in this user manual, for cleaning domestic crockery and cutlery. Any other usage is not supported by the manufacturer and could be dangerous.

The manufacturer cannot be held liable for damage resulting from incorrect use, operation, and installation.

Do not use solvents in the dishwasher. Danger of explosion.

Untitled-2 5 2026-05-26 5:39:20

Safety information

Do not inhale or ingest dishwasher detergent. Dishwasher detergents contain irritant or corrosive ingredients which can cause burning in the nose, mouth and throat if swallowed, or inhibit breathing. Consult a doctor immediately if detergent has been swallowed or inhaled.

Avoid leaving the door open unnecessarily, as you could trip over it.

Do not sit or lean on the opened door. This could cause the dishwasher to tip and get damaged, and you could get injured.

Only use detergent and rinse aid formulated for domestic dishwashers. Do not use washing-up liquid.

Do not use any strong acid cleaning agent.

Do not fill the rinse aid compartment with powder or liquid detergent. This will cause serious damage to the compartment.

Inadvertently filling the salt storage with powder or liquid dishwasher detergent will damage the water softener. Make sure to use the correct packet of dishwasher salt when filling the salt storage.

Please only use special coarse grained dishwasher salt for reactivation, as other salts may contain insoluble additives which can impair the functioning of the softener.

In an appliance with a cutlery basket (depending on the model), cutlery is cleaned and dried better if placed efficiently in the basket with the handles downwards. However, to avoid the risk of injury, place knives and forks etc. with the handles upwards.

Plastic items which cannot withstand being washed in hot water, such as disposable plastic containers, or plastic cutlery and crockery should not be cleaned in the dishwasher. The high temperatures in the dishwasher may cause them to melt or lose shape.

On models with the **Delay Start** function, make sure that the detergent compartment is dry before adding detergent. Wipe dry if necessary. The detergent will clog if poured into a damp detergent compartment and may not be thoroughly dispersed.

Always be caution when using remote control. You may be exposed to security risks during use, and usage-related problems may also arise because of Internet connectivity issues or incorrect settings.

Please do not operate the product with living beings (such as a person or an animal) or items that may cause water leakage or explosion.

Instructions for protecting your children

This appliance is not a toy! To avoid the risk of injury, keep children well away and do not allow them to play in or around the dishwasher or to use the controls. They will not understand the potential dangers posed by it. They should be supervised whenever you are working in the kitchen. There is also a danger that children playing might shut themselves in the dishwasher.

Cleaning and user maintenance shall not be made by children without supervision.

Older children may only use the dishwasher when its operation has been clearly explained to them and they are able to use it safely, recognising the dangers of misuse.

KEEP CHILDREN AWAY FROM DETERGENTS!

Untitled-2 6 2026-05-26 5:39:20

Dishwasher detergents contain irritant and corrosive ingredients which can cause burning in the mouth, nose and throat if swallowed, or inhibit breathing.

Keep children away from the dishwasher when the door is open. There could still be detergent residues in the cabinet.

Consult a doctor immediately if your child has swallowed or inhaled detergent.

Instructions for installing your dishwasher

Before setting up the appliance, check it for any externally visible damage. Under no circumstances should you use a damaged appliance. A damaged appliance can be dangerous.

The dishwasher must only be plugged into the electricity supply through a suitable switched socket. The electrical socket must be easily accessible after the dishwasher is installed so that it can be disconnected from the electricity supply at any time.

There must be no electrical sockets behind the dishwasher. The Danger of overheating and fire risk if the dishwasher were to be pushed up against a plug. After the installation is complete, make sure the power plug is not bent or damaged.

The dishwasher must not be installed under a hob. The high radiant temperatures which are sometimes generated by a hob could damage the dishwasher. For the same reason, it should not be installed next to open fires or other appliances which give off heat, such as heaters etc.

Do not connect the dishwasher to the mains supply until it has been fully installed and any adjustment has been made to the door springs.

Before connecting the appliance, check that the connection data on the data plate (voltage and connected load) match the mains electricity supply. If in any doubt, consult a qualified electrician.

The electrical safety of this appliance can only be guaranteed when continuity is complete between it and an effective grounding system. It is most important that this basic safety requirement is present and regularly tested and where there is any doubt the electrical system in the house should be checked by a qualified electrician.

The manufacturer cannot be held liable for the consequences of an inadequate grounding system (for example electric shock). Do not connect the ground wire to plastic plumbing, gas lines, or hot water pipes. Improperly connected grounding conductors may cause electric shock.

Do not connect the appliance to the mains electricity supply by a multi-socket unit or an extension lead. These do not guarantee the required safety of the appliance (for example danger of overheating).

This appliance may only be installed in mobile installations such as ships if a risk assessment of the installation has been carried out by a suitably qualified engineer.

The plastic housing of the water connection contains an electrical component. The housing must not be submerged in water.

There are electrical wires in the hose of Aqua-Stop. Never cut the water inlet hose, even if it is too long.

Untitled-2 7 2026-05-26 5:39:20

Safety information

Installation, maintenance and repairs may only be carried out by a suitably qualified and competent person in strict accordance with current national and local safety regulations. Repairs and other work by unqualified persons can be dangerous. The manufacturer cannot be held liable for unauthorised work.

The integrated waterproof system offers protection from water damage, provided the following conditions are met:

- The dishwasher is correctly installed and plumbed in.
- The dishwasher is properly maintained and parts are replaced where it can be seen that this is necessary.
- The stopcock/supply valve has been turned off when the appliance is not used for a longer period of time (for example during holidays).
- The waterproof system will work even if the appliance is switched off. However, the appliance must remain connected to the electricity supply.

A damaged appliance can be dangerous. If the dishwasher gets damaged, switch it off at the mains and call your dealer or the service department.

Unauthorised repairs could result in unforeseen dangers for the user, for which the manufacturer cannot accept liability. Repairs should only be undertaken by an approved service technician.

Faulty components must only be replaced by original spare parts. Only when these parts are fitted can the safety of the appliance can be guaranteed.

Always disconnect the dishwasher from the electrical supply for maintenance work (Power off the wall socket and remove the plug).

If the connection cable is damaged, it must be replaced with a special cable available from the manufacturer. For safety reasons, this must only be fitted by the service department or an authorised service technician.

In countries where there are areas which may be subject to infestation by cockroaches or other vermin, pay particular attention to keeping the appliance and its surroundings in a clean condition at all times. Any damage which may be caused by cockroaches or other vermin will not be covered by the guarantee.

In the event of a fault or for cleaning purposes, the appliance is only completely isolated from the electricity supply when:

- it is switched off at the wall socket and the plug is withdrawn, or
- it is switched off at the mains, or
- the mains fuse is disconnected, or
- the screw-out fuse is removed (in countries where this is applicable).

Do not make any alterations to the appliance, unless authorised to do so by the manufacturer.

Never open the casing/housing of the appliance. Tempering with electrical connections or components and mechanical parts is highly dangerous and can cause operational faults or electric shock.

While the appliance is under guarantee, repairs should only be undertaken by a service technician authorised by the manufacturer. Otherwise, the guarantee will be invalidated.

Untitled-2 8 2026-05-26 5:39:20

When installing the product, make sure there is space at the top, left, right and back of the product to ensure proper ventilation. If there is insufficient space between the product and the sink, it may damage the sink or allow mould to grow.

The ventilation openings in the base must not be obstructed by any objects (such as a carpet or rug). Obstructing the openings may result in damage to the product or cause a fire hazard.

Make sure that your dishwasher's hardness level setting is correct as your area. (Refer to the "**Salt storage**" section on page **61**.)

Please consult www.samsung.com/support for more information about materials and repairs.

Instructions about the WEEE



Correct Disposal of This Product (Waste Electrical & Electronic Equipment)

(Applicable in countries with separate collection systems)

This marking on the product, accessories or literature indicates that the product and its electronic accessories (e.g. charger, headset, USB cable) should not be disposed of with other household waste at the end of their working life. To prevent possible harm to the environment or human health from uncontrolled waste disposal, please separate these items from other types of waste and recycle them responsibly to promote the sustainable reuse of material resources.

Household users should contact either the retailer where they purchased this product, or their local government office, for details of where and how they can take these items for environmentally safe recycling.

Business users should contact their supplier and check the terms and conditions of the purchase contract. This product and its electronic accessories should not be mixed with other commercial wastes for disposal.

For information on Samsung's environmental commitments and product regulatory obligations, e.g. REACH, visit our sustainability page available via www.samsung.com

Untitled-2 9 2026-05-26 5:39:20

Product overview

Dishwasher at a glance

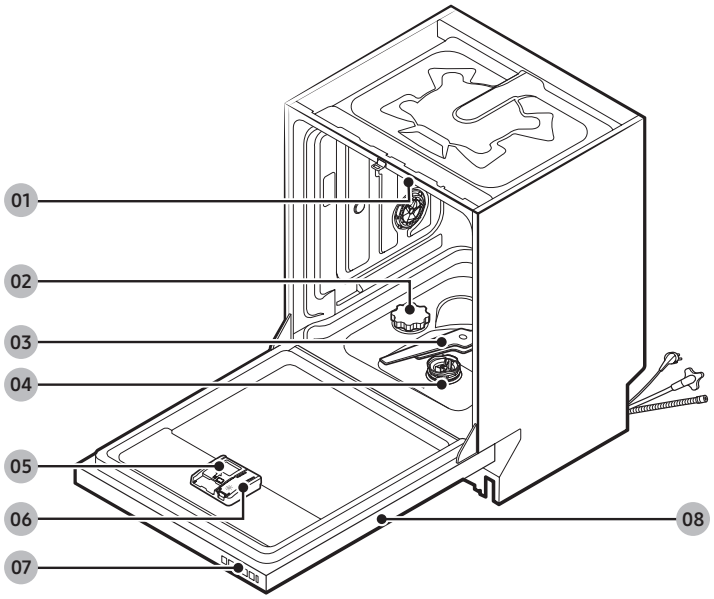

01 Top spray arm
02 Salt storage
03 Bottom spray arm
04 Filters
05 Detergent compartment
06 Rinse aid compartment
07 Control panel
08 Door

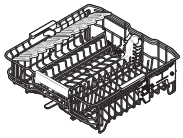

Upper rack

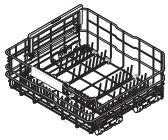

Lower rack

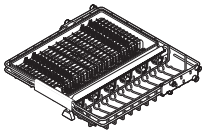

Cutlery rack (Applicable models only)



Cutlery basket (Applicable models only)

NOTE

Depending on the models, the actual appearance of the product and its parts may differ from the figures.

Untitled-2 10 2026-05-26 5:39:22

Preparing the installation

Installation kit (provided)

Make sure all the parts listed in this section are enclosed with the product. The actual appearance of the parts may differ from the figures.

⚠ CAUTION

After unpacking the dishwasher, keep packaging materials out of children's reach to ensure their safety.

NOTE

The number inside the parenthesis is the provided quantity of the item.

Fully built-in models



Top bracket (2)



Custom panel fixer (2)



Ø4 X 12 screw (8)

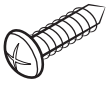

Ø4 X 16 screw (2)

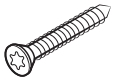

Ø4 X 43 screw (6)



Protective sticker

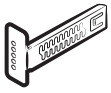

Kickplate bracket (2)



Plastic cap (4)



Check valve (Applicable models only)

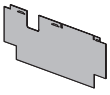

Rubber skirt (Applicable models only)



Door opening tool



Salt guide

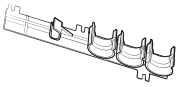

Hose holder (1)

Untitled-2 11 2026-05-26 5:39:25

Preparing the installation

Fully built-in models with sliding panel



Top bracket (2)



Ø4 X 12 screw (8)



Ø4 X 16 screw (12)



Custom panel fixer - top (2)



Custom panel fixer - bottom (2)



Protective sticker

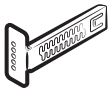

Kickplate bracket (2)



Plastic cap (4)



Check valve (Applicable models only)



Salt guide

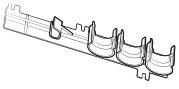

Hose holder (1)

Semi built-in models



Top bracket (2)



Custom panel fixer (2)



Ø4 X 12 screw (8)

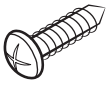

Ø4 X 16 screw (2)



Ø4 X 43 screw (4)

Protective sticker

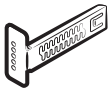

Kickplate bracket (2)



Plastic cap (4)

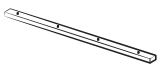

Spacer (4)



Check valve (Applicable models only)



Salt guide

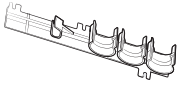

Hose holder (1)

Untitled-2 12 2026-05-26 5:39:26

Built under sink models



Top bracket (2)



Ø4 X 12 screw (8)



Screw – bespoke door (2)



Protective sticker



Plastic cap (4)

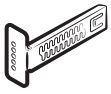

Kickplate bracket (2)



Check valve (Applicable models only)

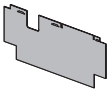

Rubber skirt (Applicable models only)



Salt guide

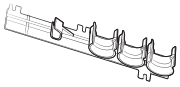

Hose holder (1)

Untitled-2 13 2026-05-26 5:39:26

Preparing the installation

Required tools and parts (not provided)



Hose clamp



Safety glasses



Gloves

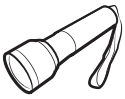

Flashlight



Wrench (22 mm) for the front foot



Torx T20 screwdriver

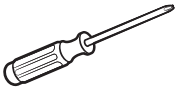

Phillips screwdriver

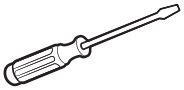

Flat-head screwdriver



Pliers

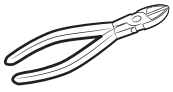

Nipper

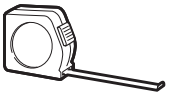

Tape measure



Pencil



Level

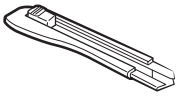

Cutting knife



Hole saw (80 ~ 100 mm)

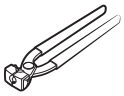

Ear clamp plier

Untitled-2 14 2026-05-26 5:39:30

Installation requirements

To prevent a risk of fire, electric shock, or personal injury, all wiring and grounding must be done by a qualified technician.

Power supply

An individual 220-240 V~, 50 Hz branch circuit that is dedicated to the dishwasher.

⚠ WARNING

- Do not use an extension cord.
- You must only use the power plug that comes with the dishwasher.
- After the installation is complete, make sure the power plug is not bent or damaged.

Grounding

For permanent grounding, the dishwasher must be properly grounded to a grounded metal or permanent wiring system. The grounding conductor must be run with the circuit conductors and then connected to the grounding terminal or lead on the dishwasher.

⚠ WARNING

- Do not connect the ground wire to plastic plumbing, gas lines, or hot water pipes. Improperly connected grounding conductors may cause electric shock.
- Do not modify the power plug of the dishwasher. If the power plug does not fit the outlet, have a proper outlet installed by a qualified electrician.

Water supply

- The water supply line must support water pressures between 0.05 and 0.8 MPa.
- Water temperatures must be lower than 60 °C.
- The stopcock / supply valve with a 3/4" male thread must be installed for the water supply connection.

To reduce the risk of leaks:

- Make sure water taps are easily accessible.
- Turn the water supply valve off when the dishwasher is not in use.
- Check for any leaks at the water hose fittings on a regular basis.
- To stop any leak, seal the water line connections and joints using Teflon tape or a sealing compound.

Aqua Stop

The Aqua Stop is an electrical component that is designed to prevent water leaks. The Aqua Stop is attached to the water hose and automatically cuts off the water flow in the event of damage to the hose.

⚠ CAUTION

- Handle the Aqua Stop with care.
- Do not kink or twist the water hose connected to the Aqua Stop. If the Aqua Stop is damaged, shut off the water taps and unplug the power plug immediately. Then, contact a local Samsung customer centre or a qualified technician.

Untitled-2 15 2026-05-26 5:39:30

Preparing the installation

Drain

If you are using a drain system dedicated to the dishwasher, connect the drain hose to a drain system that is between 300 mm and 700 mm off the ground. Connecting the drain hose to a drain system more than 700 mm off the ground can cause the drained water to flow backward.

Flooring

For safety, install the dishwasher on a solidly constructed floor. Wooden floors may need to be reinforced to minimise vibrations. Avoid installing on carpet or soft tiles. Carpeting and soft tile may cause vibrations and may cause your dishwasher to move slightly while operating.

⚠ WARNING

Do not install the dishwasher on a poorly supported structure.

- Make sure the dishwasher is level using the height-adjustable feet.
- When levelling is complete, check if the door opens and closes properly.

Ambient temperature

Do not install the dishwasher in an area exposed to freezing temperatures. The dishwasher always retains some water in the water valve, pump, and hose. If the water freezes in the dishwasher or hoses, it may damage the dishwasher and its components.

Untitled-2 16 2026-05-26 5:39:30

Installation

Step-by-step installation

The installation procedure may differ depending on the model.

STEP 1 Select a location

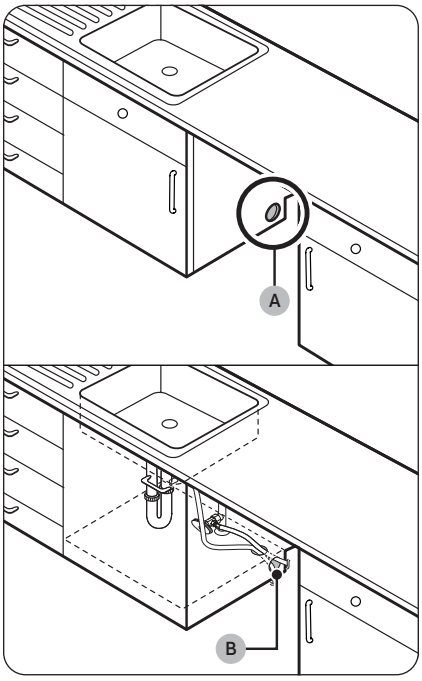

Select a location that meets the following conditions.

- The location must have a solid floor that can support the weight of the dishwasher.
- The location must be near a sink with easy access to the water supply, drain system, and electrical outlet.
- The location must let you load dishes into the dishwasher easily.
- The location must have sufficient space for the dishwasher door to open easily and provide enough space between the dishwasher and the cabinet sides.
- The rear wall must be free of obstructions.

Installation in a new location

If you install the dishwasher in a new location, follow these instructions before installing the dishwasher.

1. Using a hole saw, cut a hole into the side of the cabinet that holds the sink **(A)**.
2. If the base inside the sink cabinet is raised above the kitchen floor and is higher than the connections on the dishwasher, make a hole in the base inside the cabinet and in the cabinet side **(B)**.

NOTE

- If you are replacing an old dishwasher, check the existing connections for compatibility with the new dishwasher and replace the connections as needed.
- You may need to cut a hole in the opposite side of the cabinet according to the location of the electrical outlet.

Untitled-2 17 2026-05-26 5:39:30

Installation

Cut-out dimension

Minimum clearance for stable operation:

- Sides: 1.5 mm

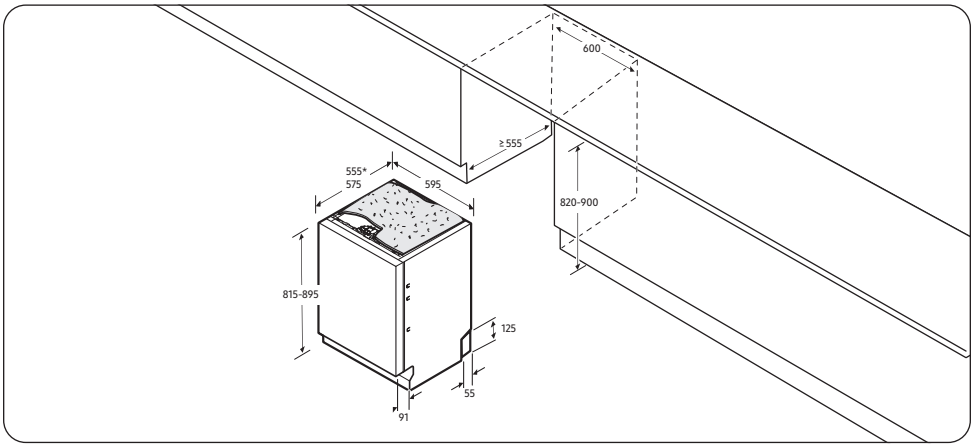

(unit: mm)

* Fully built-in models without custom panel

NOTE

The dimension may differ depending on the model.

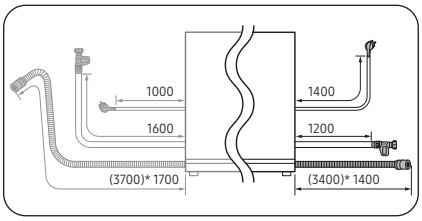

(*) values with extension kit

NOTE

The dimensions indicated in the figure represent the actual lengths of the power cord, water hose, and drain hose. When installing the product, consider each length and choose the installation location accordingly.

STEP 2 Check the water line

- The water line pressure must be between 0.05 and 0.8 MPa.
- Make sure that the water temperature does not exceed 60 °C. Hot water over 60 °C may cause the dishwasher to malfunction.
- Make sure that the water supply valve is turned off before connecting the water supply line to the dishwasher.

Untitled-2 18 2026-05-26 5:39:31

STEP 3 Arrange the hoses

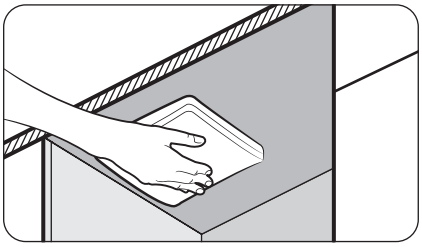

1. Clean the bottom of the countertop.

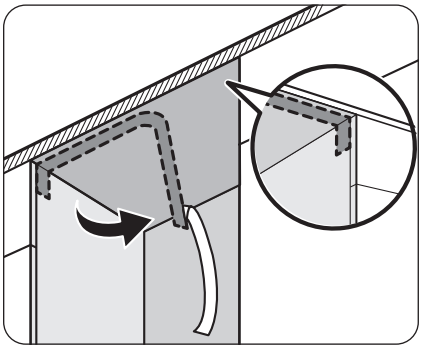

2. Attach the protective sticker as shown.

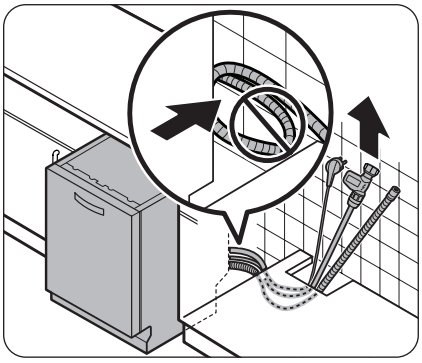

3. Pull the power plug, the water hose, and the drain hose through the sink hole.

⚠ CAUTION

Use caution not to kink or step on the power plug or the hoses.

Untitled-2 19 2026-05-26 5:39:32

Installation

STEP 4 Level the dishwasher

For built-in models

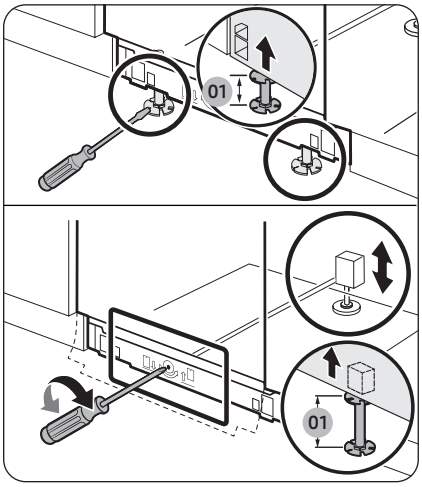

01 0-80 mm

You can adjust the height of the dishwasher to level it. Note that in these steps, the dishwasher is currently inserted halfway.

1. Use the level to check if the dishwasher is level.
2. Use a flat-head screwdriver to adjust the front height.
   - To lower the height, turn the levelling foot clockwise.
   - To raise the height, turn the levelling foot anticlockwise.
3. To adjust the rear height, insert the Phillips screwdriver in the bottom center of the dishwasher.
   - To lower the height, turn the screwdriver clockwise.
   - To raise the height, turn the screwdriver anticlockwise.
4. When levelling is complete, check if the door opens and closes properly.

Untitled-2 20 2026-05-26 5:39:32

For free standing models

You can adjust the height of the dishwasher up to 45 mm using the levelling feet.

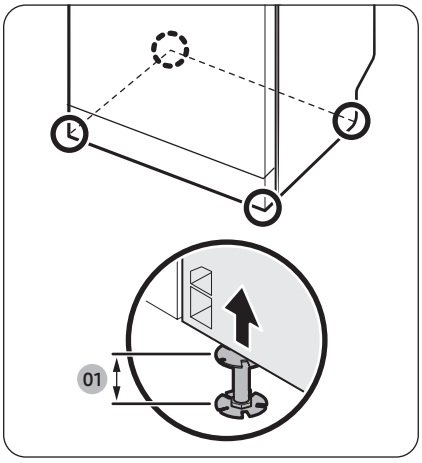

01 0-45 mm

1. While slightly lifting the front or rear (or both in turns) of the dishwasher, turn the levelling foot using a flat-head screwdriver to adjust the height.
2. When complete, use the leveller to make sure the dishwasher is level.
3. Insert the dishwasher under the sink and make sure to secure at least 4 mm space between the top of the dishwasher and the bottom of the sink plate.

⚠ CAUTION

Do not arrange the power cord of the dishwasher using a metallic cable tie.

Untitled-2 21 2026-05-26 5:39:32

Installation

STEP 5 Secure the dishwasher (for built-in models only)

You can use the brackets to secure the dishwasher to the countertop. Alternatively, you can drill the side holes to secure the dishwasher to the cabinet sides.

⚠ CAUTION

Before securing the dishwasher, put a large towel on the bottom of the dishwasher (covering the sump) to prevent wood shavings or screws from falling into the dishwasher sump.

To the countertop

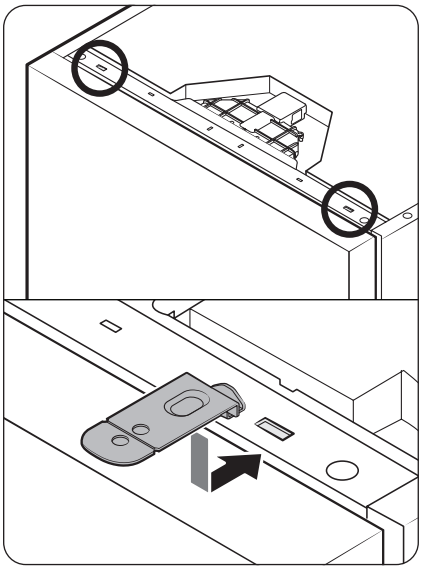

1. Insert the provided brackets into the top front holes of the dishwasher as shown.
2. Fully insert the dishwasher under the countertop.

Untitled-2 22 2026-05-26 5:39:33

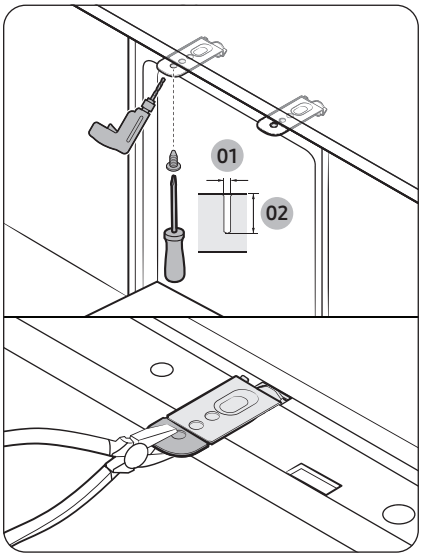

01 2 mm
02 12 mm

3. Carefully drill 2 screw holes into the bottom of the countertop from beneath, one for each countertop bracket.
   - Make sure the hole you drill is smaller than the diameter of the screw.
4. Insert the provided screws into the hole of the brackets, and then tighten them to secure the dishwasher to the countertop.

NOTE

- If the provided brackets are too long, cut them down using pliers.
- Use a magnetic screwdriver to help prevent screws from falling into the dishwasher.

Untitled-2 23 2026-05-26 5:39:33

Installation

To the side walls

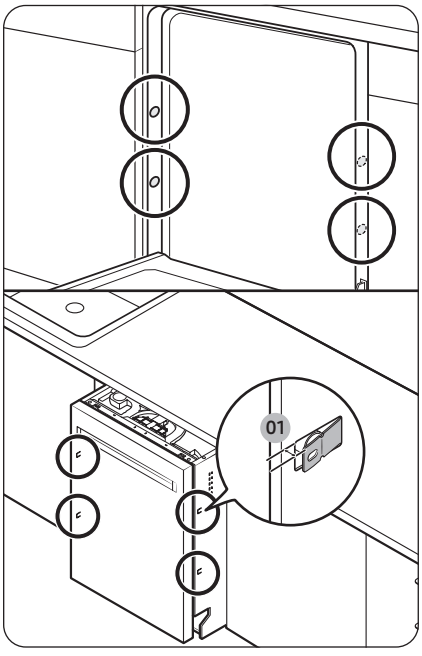

01 5 mm

1. To prevent damage to the drain hose through the water supply line, slightly pull out the dishwasher and pull out the side brackets on the left and right side of the dishwasher by 5 mm. When done, reinsert the dishwasher with its centre aligned.

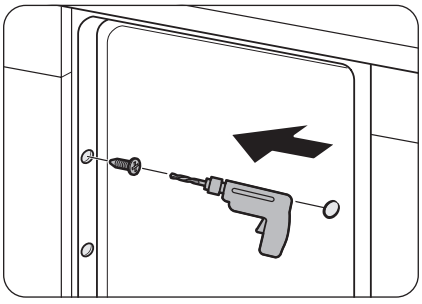

2. Drill a hole into both sides of the kitchen cabinet, totaling 2 screw holes.
   - Make sure the hole you drill is smaller than the diameter of the screw.
   - Make sure the drill bit does not strike the sides of the spacer cap holes.
3. Tighten the provided screws into the holes to secure the dishwasher to the cabinet.
4. Insert the provided plastic caps to the places where screws are fastened.

Untitled-2 24 2026-05-26 5:39:34

STEP 6 Connect the drain hose

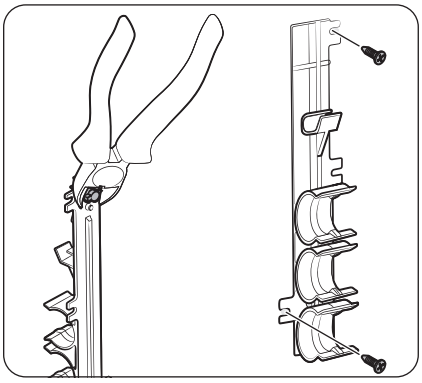

1. Detach the hose holder from the dishwasher, and then cut off the protruding part from the holder as shown.
2. Fix the holder to a wall by tightening the 2 screws (Ø4 X 12).

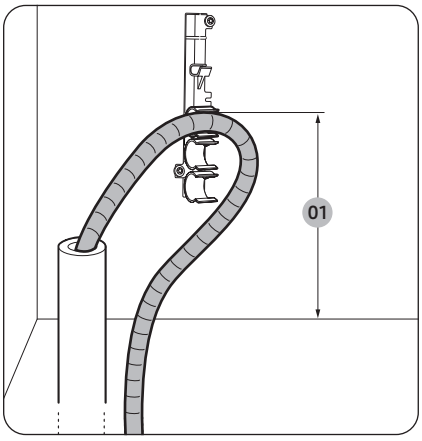

3. Insert the drain hose into the holder so that the drain hose is positioned 300 mm to 700 mm from the bottom.

01 Max. 700 mm

Untitled-2 25 2026-05-26 5:39:34

Installation

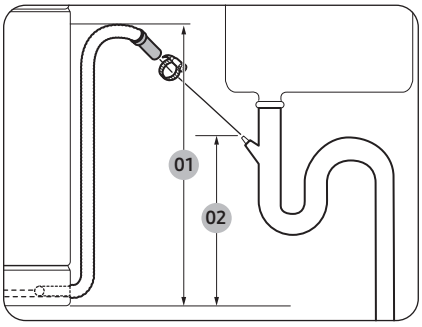

01 Max. 700 mm
02 Min. 300 mm

4. Connect the drain hose to the drain outlet.

⚠ CAUTION

- Install the drain system properly so that the drain hose does not come out of the drain outlet in the draining process.
- Secure the drain hose using a hose clamp, cable tie, or Teflon tape (not provided), and seal any gaps between the hose and the drain pipe with silicone to help prevent leaks and odors.
- Make sure that the drain hose, supply hose, and power cord are not kinked or folded.

STEP 7 Final check

1. Remove all foam, paper packaging, and unnecessary parts from inside the dishwasher.
2. Turn the power circuit breaker on.
3. Open the water supply valve to supply water to the dishwasher.
4. Plug in and turn the dishwasher on. Then, select and run the Express ▷▷ cycle.
   - If your model does not have the Express ▷▷ cycle, select and run the cycle that takes the shortest operation time to check if the dishwasher operates properly.
5. Check if the dishwasher turns on normally and if there are any water leaks while the dishwasher is operating. Make sure to check for water leaks on both ends of the water line and the drain hose connector.

Untitled-2 26 2026-05-26 5:39:35

Installing the free standing model under the sink

You can install the dishwasher under the sink. To do this, follow the instructions below.

⚠ WARNING

Samsung Electronics is not responsible for any product failure or damage that may arise from your installation of the free standing model under the sink.

Removing the top cover

If you want to install your free standing model under the cabinet but if it does not fit into the cabinet because of the height, you can remove the top cover.

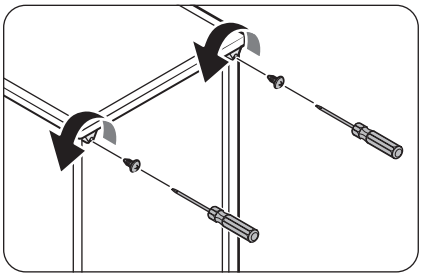

1. Remove the 2 screws from the top corners on the rear side of the dishwasher.

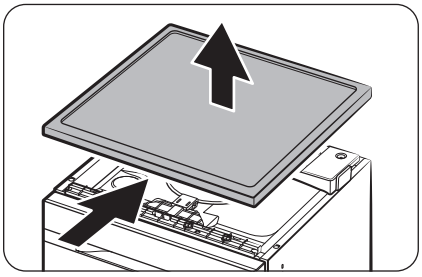

2. Slide the worktop of the dishwasher to the rear and lift up to remove it.
3. Refer to the "**Step-by-step installation**" section to proceed with the rest of the installation.

Untitled-2 27 2026-05-26 5:39:35

Installation

Finalizing the installation

Installing the custom panel

Fully built-in models

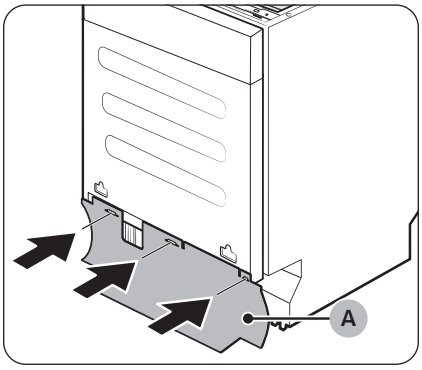

NOTE

For the models with the **rubber skirt (A)**, push it under the dishwasher before installing the panel.

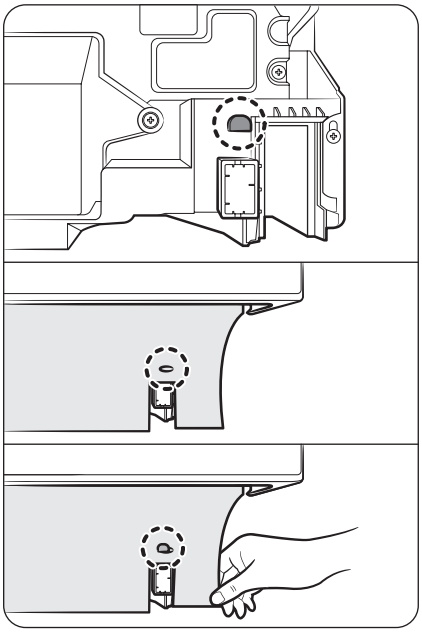

Insert the hook through the hole on the rubber skirt and pull the sides to ensure it is secured to the hook.

Untitled-2 28 2026-05-26 5:39:36

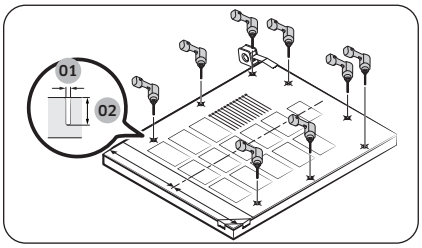

01 Ø2 mm
02 10~12 mm

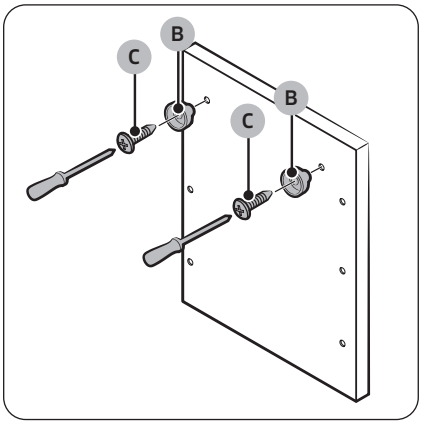

1. Put the installation template on the rear of the custom panel and fix it temporarily using transparent tape. The rear of the custom panel will be attached to the dishwasher door.

⚠ CAUTION

- The top edge and the center of the custom panel and the installation template must align to ensure a proper fit and maintain smooth door operation.
- Use a custom panel between 4 kg and 9 kg.

2. Mark 8 points guided on the installation template.
3. Remove the installation template and tighten the **custom panel fixers (B)** at the top with **2 screws (C, Ø4 X 16)** as shown.

Untitled-2 29 2026-05-26 5:39:36

Installation

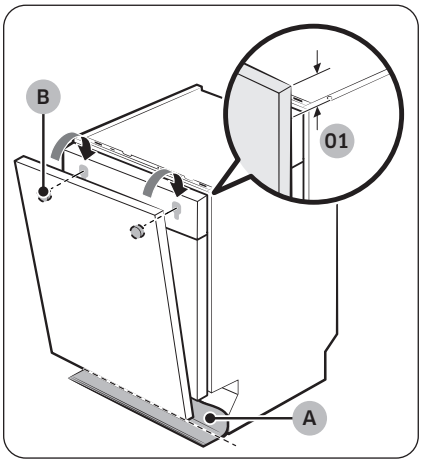

01 Max. 30 mm

4. While holding the custom panel, attach it to the door and insert the **custom panel fixers (B)** into the corresponding holes at the top of the door as shown.
5. Push the custom panel downward to fix.

⚠ CAUTION

Do not let the custom panel extend more than 30 mm from the top of the dishwasher.

6. Cut the **rubber skirt (A)** using a cutting knife so that it is aligned with the front line of the dishwasher, which is represented as a dashed line.

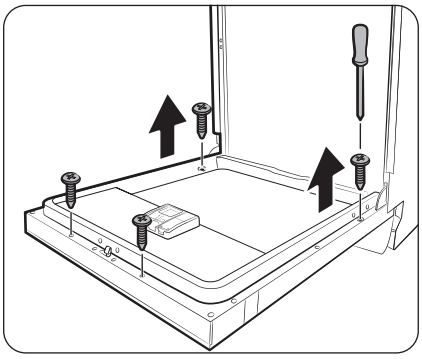

7. Open the dishwasher door and remove the 4 screws.

⚠ CAUTION

Use caution when opening the door. The door might open or close unexpectedly if the spring level is not adjusted appropriately, resulting in physical injury.

Untitled-2 30 2026-05-26 5:39:37

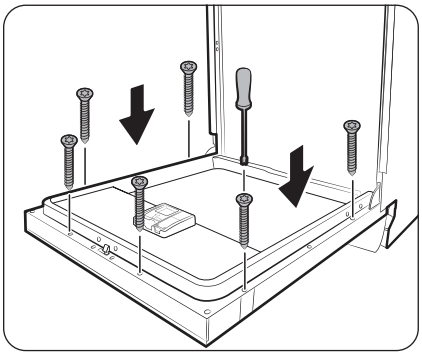

8. Secure the custom panel to the door by fastening the 6 screws (Ø4 X 43).

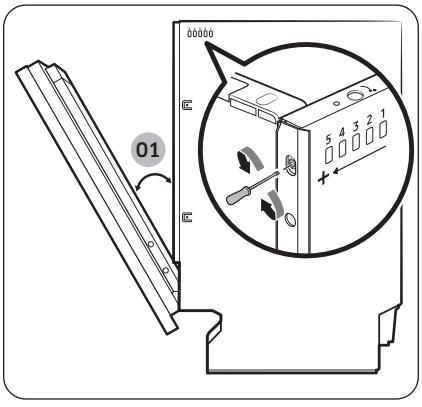

01 30° is recommended.

9. Refer to the "Recommended spring levels" table and adjust the spring level by turning the spring screw with Torx T20 screwdriver on the front of the dishwasher.
   - Adjust the spring level while the door is approximately opened at 30 degrees.
   - The door should hold its position. It should not fall open.
   - If the door does not hold its position and opens or closes on its own, adjust the spring level. If the door opens on its own, turn the spring screw clockwise to tighten the spring level. If the door closes on its own, turn the spring screw counterclockwise to loosen the spring level.

⚠ CAUTION

Do not adjust the spring level while the door is completely opened.

Recommended spring levels

Level	Weight of the custom panel (kg)
Level 1-2	4-5
Level 2-3	5-6
Level 3-4	6-7
Level 4-5	7-9

Untitled-2 31 2026-05-26 5:39:38

⚠ CAUTION

If the custom panel weighs more than 9 kg, the door may fall open. Custom panels weighing more than 9 kg are not recommended.

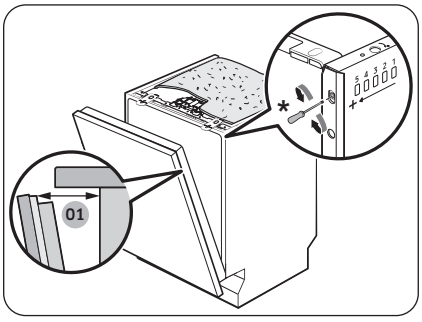

01 100 ~ 140 mm

10. Adjust the spring level so the distance between the door and the tub is between 100 and 140 mm.
- Push the door until it is almost closed, then release it to check how far it automatically opens. Adjust the spring level accordingly.
- To tighten the spring, turn the screw clockwise. To loosen it, turn the screw counterclockwise.

⚠ CAUTION

- After completing the installation, run a wash cycle and check the door opening distance when the auto door opening function activates at the end of the cycle. If the door opens too wide or too narrow, adjust the spring level accordingly.
- Since the spring level indicator on the side is not visible after installation, adjust both sides equally to ensure proper adjustment.

Fully built-in models with sliding panel

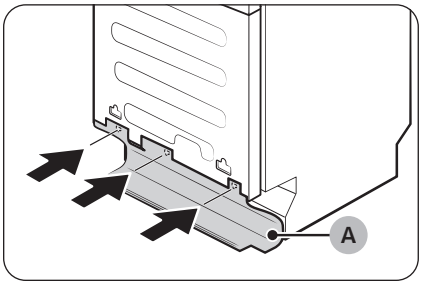

NOTE

For the models with the **rubber skirt (A)**, push it under the dishwasher before installing the panel.

Untitled-2 32 2026-05-26 5:39:38

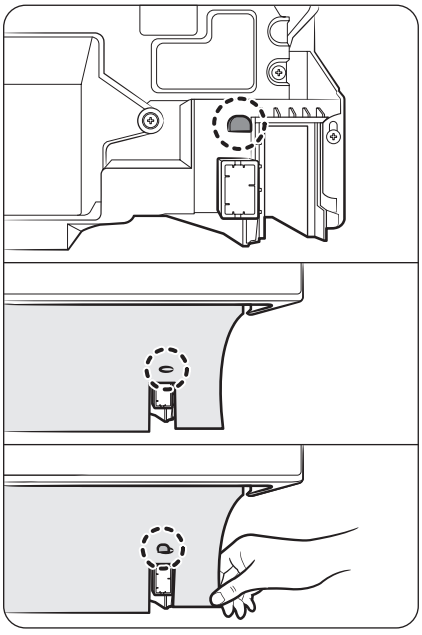

Insert the hook through the hole on the rubber skirt and pull the sides to ensure it is secured to the hook.

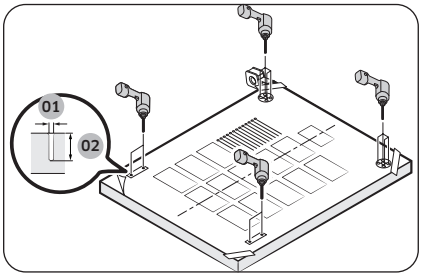

01 Ø2 mm
02 ~12 mm

1. Put the installation template on the rear of the custom panel and fix it temporarily using transparent tape. The rear of the custom panel will be attached to the dishwasher door.

⚠ CAUTION

- The top end of the custom panel must be aligned with the top end of the installation template.
- Use a custom panel between 4.5 kg and 12 kg.

2. Make 12 points guided on the installation template.

Untitled-2 33 2026-05-26 5:39:39

Installation

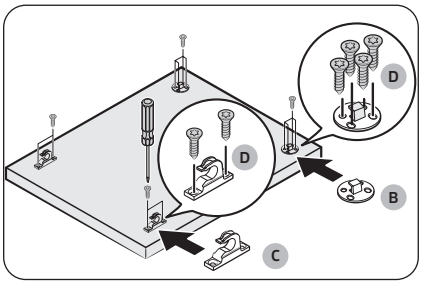

3. Remove the installation template.
4. Tighten the two **top custom panel fixers (B)** at the top with **4 screws (D)** on each fixer.
5. Tighten the two **bottom custom panel fixers (C)** at the bottom with **2 screws (D)** on each fixer.

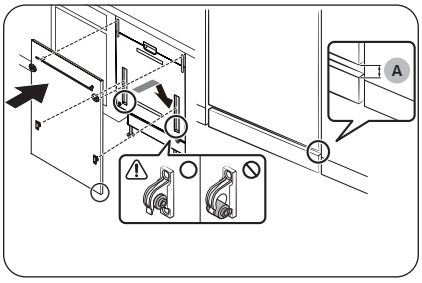

A. Min. 5 mm

6. Hold the custom panel and insert the top custom panel fixers into the grooves.
7. While gently sliding down the custom panel, insert the bottom custom fixers into the grooves.
8. Slide down the custom panel until the bottom custom panel fixers snap onto the holder.

⚠ CAUTION

- Make sure the bottom custom fixers snap onto the holder as shown in the figure.
- You must leave at least 5 mm of gap between the custom panel and the skirting board.
- Fully built-in models with sliding panel does not require spring level adjustment.

Untitled-2 34 2026-05-26 5:39:39

Semi built-in models

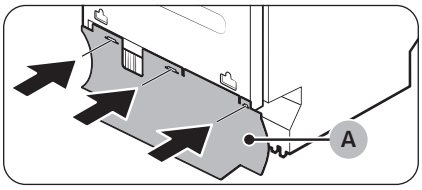

NOTE

For the models with the **rubber skirt (A)**, push it under the dishwasher before installing the panel.

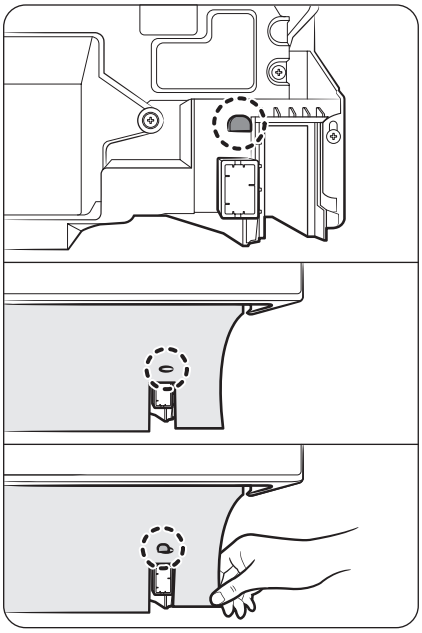

Insert the hook through the hole on the rubber skirt and pull the sides to ensure it is secured to the hook.

Untitled-2 35 2026-05-26 5:39:40

Installation

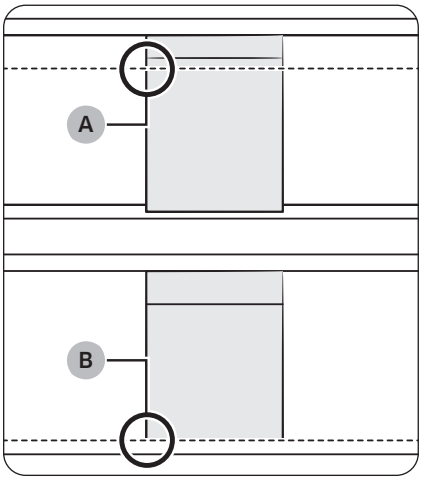

1. Select to align the custom panel to either the top or bottom edge of the cabinets.
   - **A**: To align the custom panel to the top edge of a cabinet.
   - **B**: To align the custom panel to the bottom edge of a cabinet.

⚠ CAUTION

Note that installation method differs for A and B.

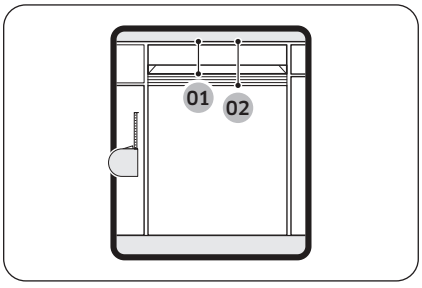

01	Min. 116 mm
02	Max. 150 mm

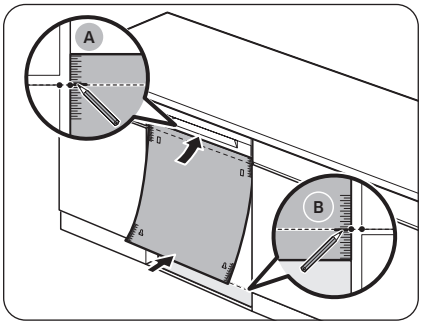

2. Fully insert the dishwasher under the countertop.
3. Align the top of the installation template to the bottom of the dishwasher's door handle.
4. On both sides of the installation template, mark the spot according to your alignment.
   - **For A**: At the top edge of a cabinet.
   - **For B**: At the bottom edge of a cabinet.

Untitled-2 36 2026-05-26 5:39:40

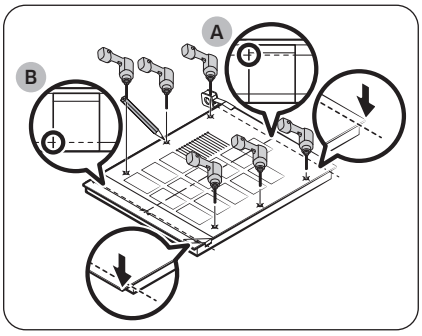

5. Put the installation template on the back of the custom panel.
   - **For A**: Align the marks on the installation template to the top edge of the custom panel.
   - **For B**: Align the marks on the installation template to the bottom edge of the custom panel.
6. Use transparent tape to temporarily fix the installation template to the custom panel.
7. On the custom panel, mark the location of the 6 screw holes according to the installation template.

NOTE

The rear of the custom panel will be attached to the dishwasher door.

⚠ CAUTION

Use a custom panel between 2.5 kg and 8 kg.

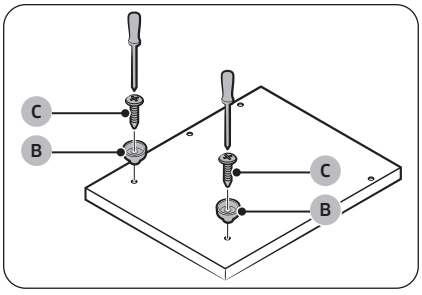

8. Remove the installation template and tighten the **custom panel fixers (B)** near the bottom with **2 screws (C, Ø4 X 16)** as shown.

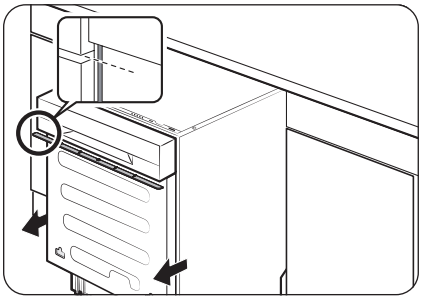

9. Pull out the dishwasher halfway from under the countertop.
10. Attach single or multiple spacers whose overall height fills the gap between the sink cabinet and the control panel.
    - The gap here is the same as the measurement in step 5.
    - For positioning and the number of spacers, see the figures on the left.

Untitled-2 37 2026-05-26 5:39:41

Installation

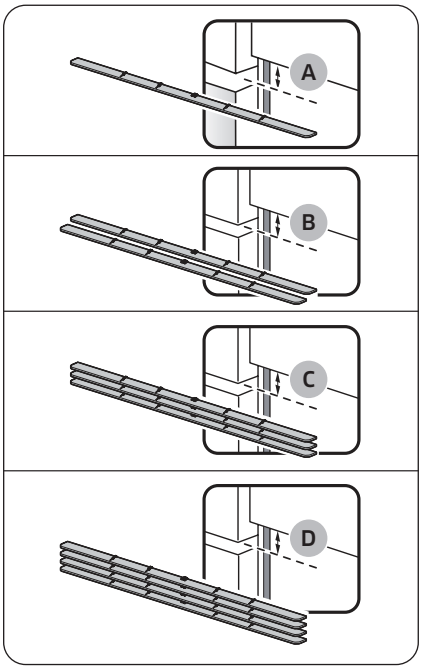

⚠ CAUTION

Do not let the overall height of the spacers exceed the measured height difference. Otherwise, the custom panel may not fit.

A	1 spacer (8.5 mm)
B	2 spacers (17 mm)
C	3 spacers (25.5 mm)
D	4 spacers (34 mm)

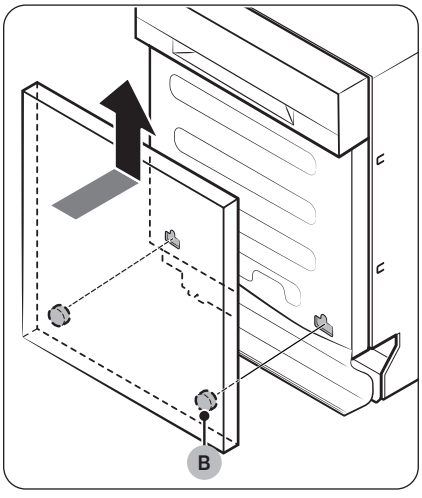

11. While holding the custom panel, attach it to the door and insert the **custom panel fixers (B)** into the corresponding holes near the bottom of the door as shown.
12. Push the custom panel upward to fix.

Untitled-2 38 2026-05-26 5:39:42

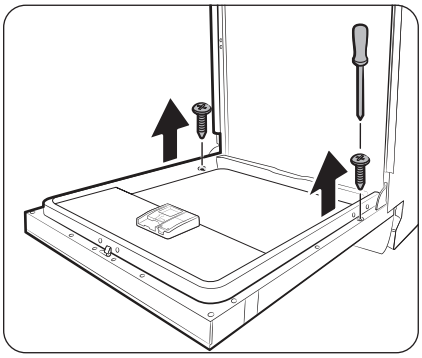

13. Open the dishwasher door and remove the 2 screws.

⚠ CAUTION

Use caution when opening the door. The door might open or close unexpectedly if the spring level is not adjusted appropriately, resulting in physical injury.

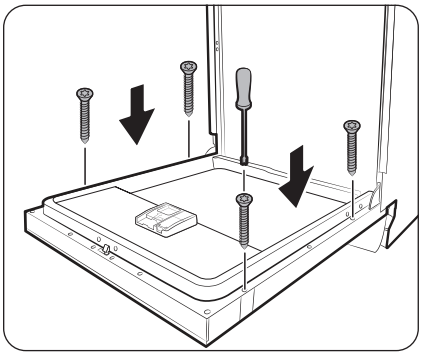

14. Secure the custom panel to the door by fastening the 4 screws (Ø4 X 43).

Untitled-2 39 2026-05-26 5:39:42

Installation

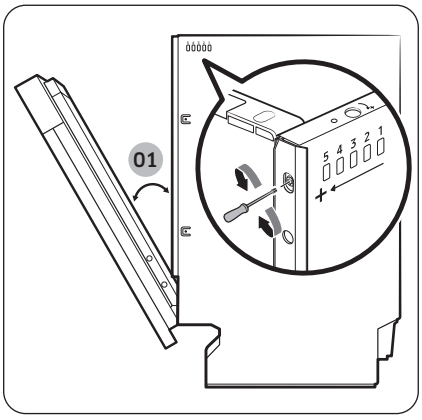

01 30° is recommended.

15. Refer to the "Recommended spring levels" table and adjust the spring level by turning the spring screw with Torx T20 screwdriver on the front of the dishwasher.
- Adjust the spring level while the door is approximately opened at 30 degrees.
- The door should hold its position. It should not fall open.
- If the door does not hold its position and opens or closes on its own, adjust the spring level. If the door opens on its own, turn the spring screw clockwise to tighten the spring level. If the door closes on its own, turn the spring screw counterclockwise to loosen the spring level.

⚠ CAUTION

Do not adjust the spring level while the door is completely opened.

Recommended spring levels

Level	Weight of the custom panel (kg)
Level 1-2	2.5-4
Level 2-3	4-5
Level 3-4	5-6
Level 4-5	6-8

⚠ CAUTION

If the custom panel weighs more than 8 kg, the door may fall open. Custom panels weighing more than 8 kg are not recommended.

Untitled-2 40 2026-05-26 5:39:43

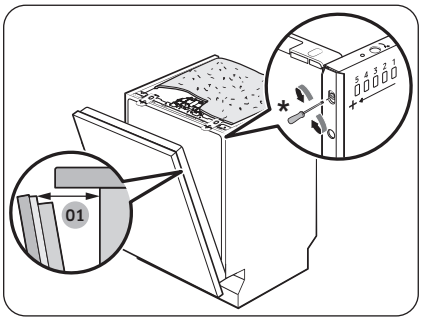

01 100 ~ 140 mm

16. Adjust the spring level so the distance between the door and the tub is between 100 and 140 mm.
- Push the door until it is almost closed, then release it to check how far it automatically opens. Adjust the spring level accordingly.
- To tighten the spring, turn the screw clockwise. To loosen it, turn the screw counterclockwise.

⚠ CAUTION

- After completing the installation, run a wash cycle and check the door opening distance when the auto door opening function activates at the end of the cycle. If the door opens too wide or too narrow, adjust the spring level accordingly.
- Since the spring level indicator on the side is not visible after installation, adjust both sides equally to ensure proper adjustment.

Untitled-2 41 2026-05-26 5:39:43

Installation

Attaching the trim (Applicable to some freestanding models only)

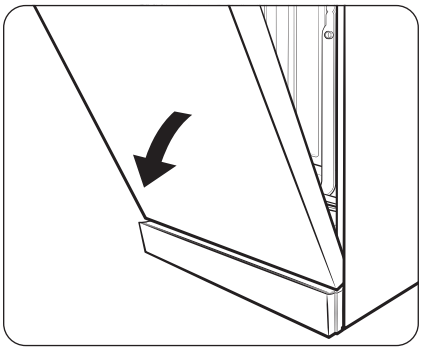

1. Open the door halfway down.

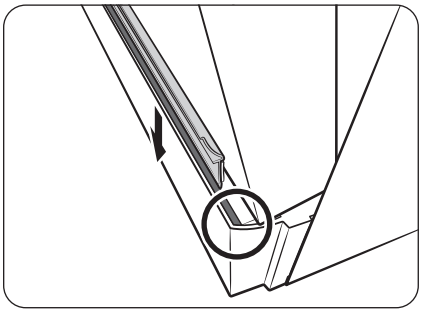

2. Insert the trim in the lower groove of the dishwasher.

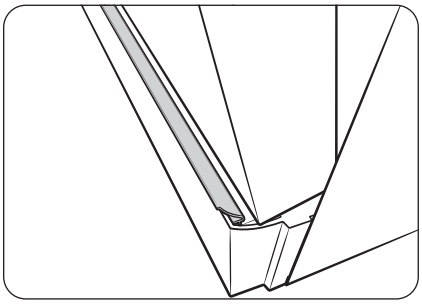

3. This is how the trim looks after attachment.

Untitled-2 42 2026-05-26 5:39:44

Attaching the skirting board

You can attach the skirting board according to the model or installation conditions.

NOTE

According to your **custom panel's height (a)**, you must leave a **gap (b)** between the custom panel and the skirting board.

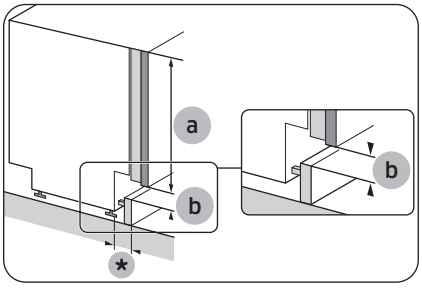

*: maximum 60 mm

Fully built-in models	
a	b
670	≥ 32
700	≥ 25
730	≥ 18

(unit: mm)

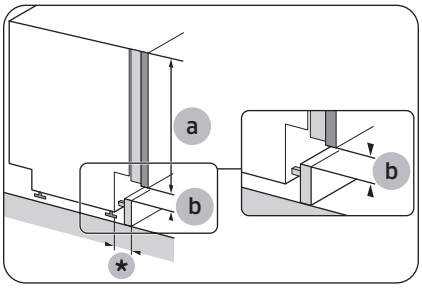

*: maximum 60 mm

Fully built-in models with sliding panel	
a	b
730~780	≥ 5

(unit: mm)

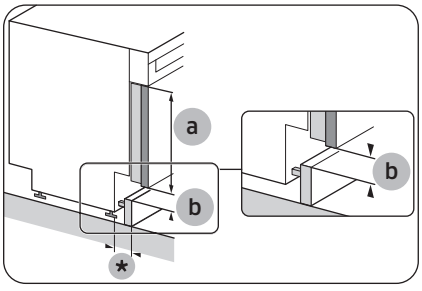

*: maximum 60 mm

Semi built-in models	
a	b
554	≥ 32
684	≥ 25
614	≥ 18

(unit: mm)

* For semi built-in models, measure **(a)** and **(b)** without a spacer.

Untitled-2 43 2026-05-26 5:39:45

Installation

Custom skirting board (Not applicable for free standing model)

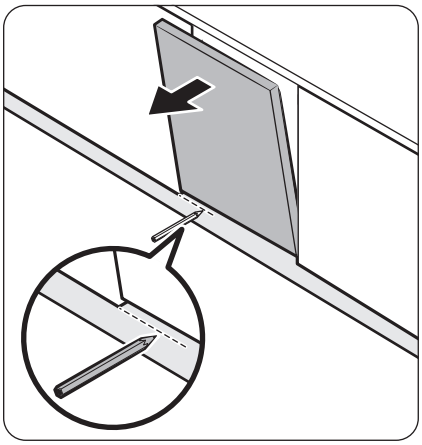

1. Put the skirting board on the bottom of the dishwasher.
2. Open the door of the dishwasher, and draw a baseline on the skirting board where it interferes with the door.

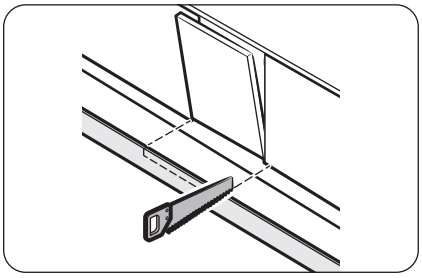

3. Follow the baseline and cut the skirting board using a saw.

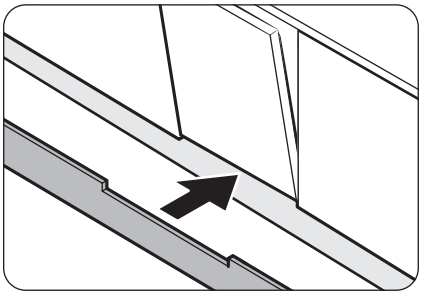

4. Attach the cut skirting board to the bottom of the dishwasher. Make sure the board does not interfere with the door of the dishwasher.

Untitled-2 44 2026-05-26 5:39:46

Pre-cut skirting board (Not applicable for free standing model)

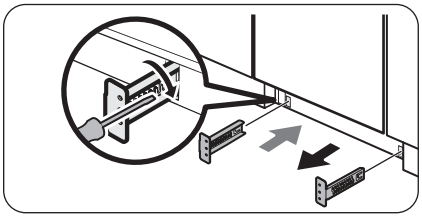

1. Insert the kickplate brackets into the slots at the bottom of the dishwasher and determine the position. Then, bend the metal tab on each bracket so that the kickplate does not slide in further than it needs.

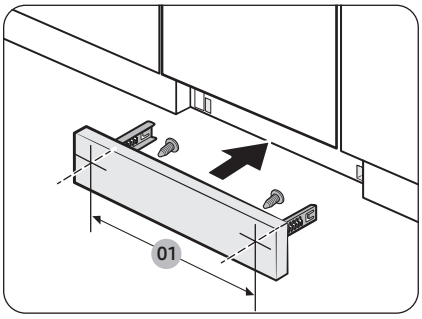

2. Attach the pre-cut skirting board onto the kickplate brackets using the screws. See the figure on the left and make sure the brackets are positioned correctly.

01 450 mm

⚠ CAUTION

Make sure the skirting board does not interfere with the dishwasher's door opening and closing.

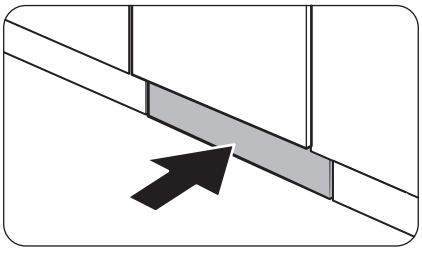

3. Push the skirting board with the brackets into the bottom of the dishwasher as shown.

Untitled-2 45 2026-05-26 5:39:46

Installation

Attaching the kickplate (Built under sink models only)

If you want to install the kickplate, follow these instructions.

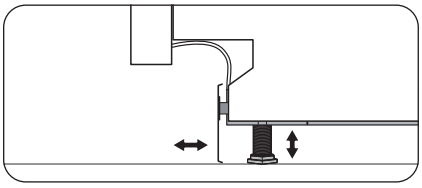

1. Turn the levelling feet of the dishwasher to adjust the height so that the kickplate fits in.

NOTE

- For dishwasher models without the levelling feet, turn the kickplate upside down so that the kickplate fits in.
- Dishwashers with a height under 864 mm do not support the installation of the kickplate. Attach the skirting board instead.

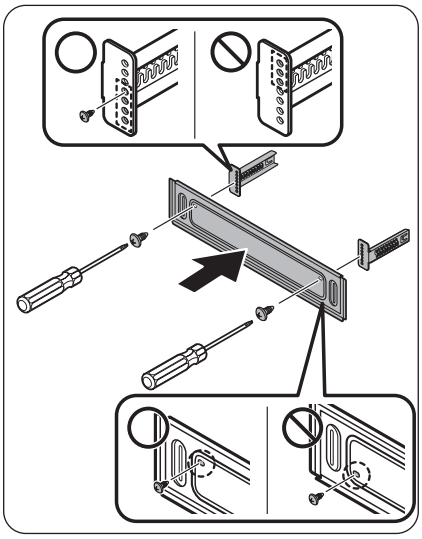

2. Attach the kickplate to the dishwasher using the kickplate brackets. Make sure the kickplate brackets are in the correct direction. See the figure for details.

NOTE

Make sure the kickplate is in the right direction.

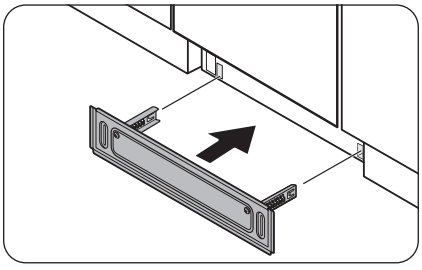

3. Push the kickplate attached to the brackets into the bottom of the dishwasher as shown.

Untitled-2 46 2026-05-26 5:39:47

Before you start

Unsuitable items for the dishwasher

⚠ WARNING

Only wash items such as glass, porcelain, and cutlery which the manufacturer declares as dishwasher safe. Do not wash aluminium (for example grease filters). The dishwasher may damage aluminium, or in extreme cases, cause a severe chemical reaction.

Do not wash the following items in the dishwasher.

- Copper, brass, tin, ivory, and aluminium items or items with adhesive
- Non-heat resistant plastics
- Craft items, antiques, valuable vases, and decorative glassware
- Pottery or glazed-ceramic items
- Wooden or silver tableware or items that includes wooden or silver parts
- Delicate glassware or glassware containing the lead crystal. Clouding may occur on the glassware after frequent washing.
- No electronic devices, especially those containing batteries, should be washed in a dishwasher, even if they are advertised as water-resistant, unless it's clearly mentioned that they are Dishwasher-Safe.

⚠ CAUTION

- Do not wash items that are covered with ash, sand, wax, lubricating grease, or paint. These materials will damage the dishwasher. Ash does not dissolve and will spread inside the dishwasher.
- Remove food remains such as bones, fruit seeds, etc. and waste such as toothpicks, paper napkins, etc. from your dishes. Food remains and waste can make noise, cause the dishwasher to malfunction, and damage your dishes and dishwasher.

NOTE

Silverware that has contacted foods containing sulphur may become discoloured. Food with sulphuric content include egg yolks, onions, mayonnaise, mustard, fish, fish brine, and marinades.

Untitled-2 47 2026-05-26 5:39:47

Before you start

Basic use of racks

NOTE

Depending on the models, the actual appearance of the racks and the loading method may differ from the figures.

Loading the lower rack

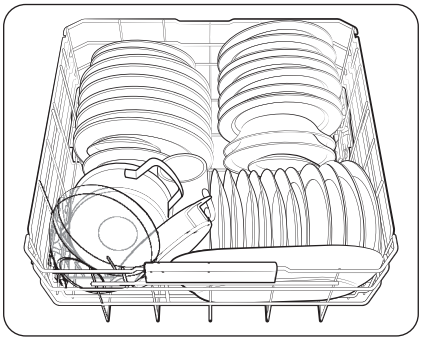

- Lower rack is for loading large items such as pots, pans, lids, serving dishes and bowls.
  - Place the items in a way that water could easily flow out.
  - You can also use the lower rack to load smaller items using the folding tines and glass supports.
  - You can lift the upper rack to gain more space to load larger items.

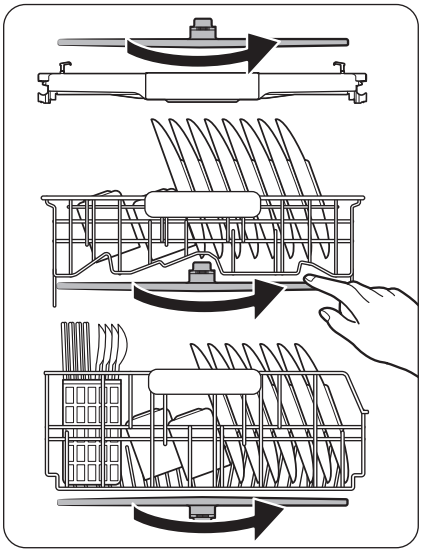

⚠ CAUTION

- Make sure the loaded items do not interfere with the rotation of the middle and bottom spray arms.
  - Check the rotation of the spray arms with your hand before starting the dishwasher.

Untitled-2 48 2026-05-26 5:39:48

Using the tines

Fold or unfold the tines depending on the items you load.

Fold them for better stacking of pots and pans and unfold them to load items such as dishes.

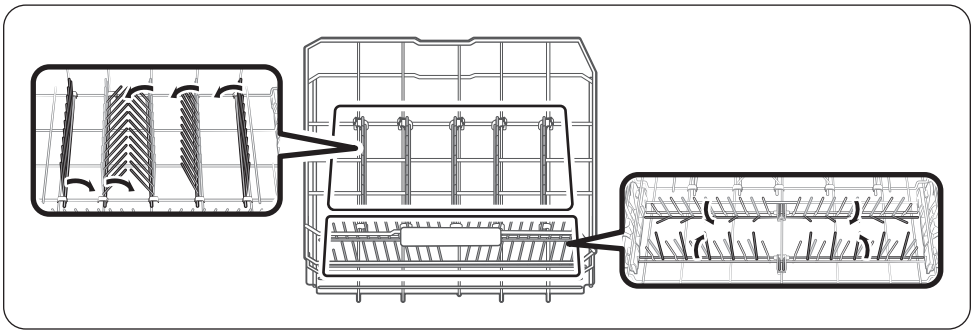

Using the pan holder (Applicable models only)

You can use the pan holder to load your pans. Fold down the tines and then lower the pan holder.

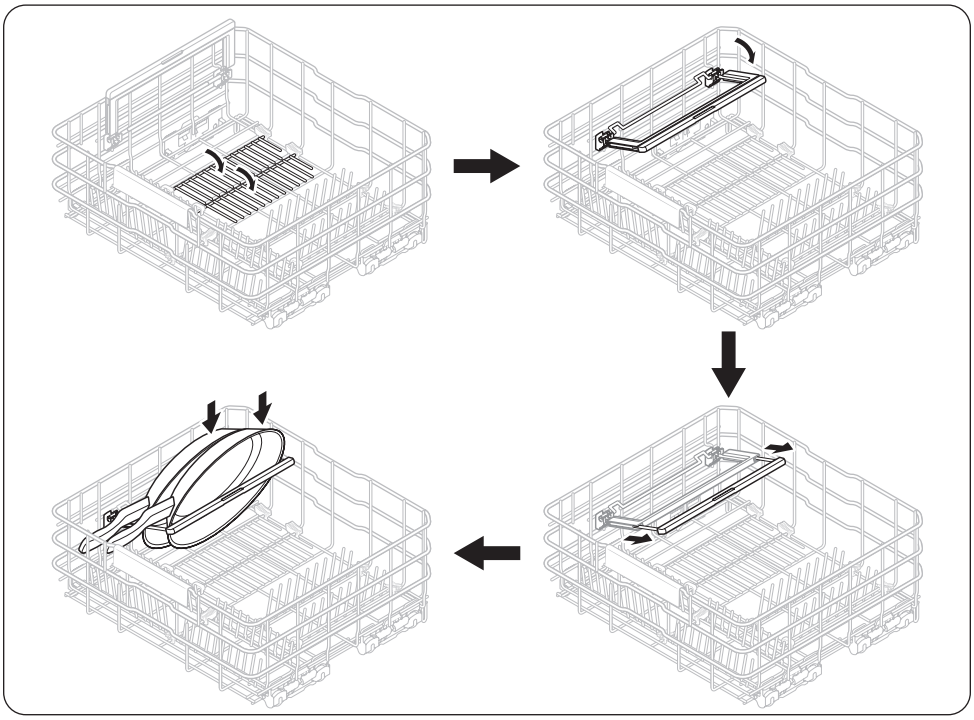

Untitled-2 49 2026-05-26 5:39:49

Before you start

⚠ CAUTION

When not using the pan holder, first push the extended part back in, then fold up the pan holder. If the extended part is not pushed in before folding up the pan holder, it may interfere with the middle spray arm's rotation, preventing proper cleaning. Before operating the dishwasher, manually rotate the middle spray arm to ensure items and pan holder are not interfering with the middle spray arm's rotation.

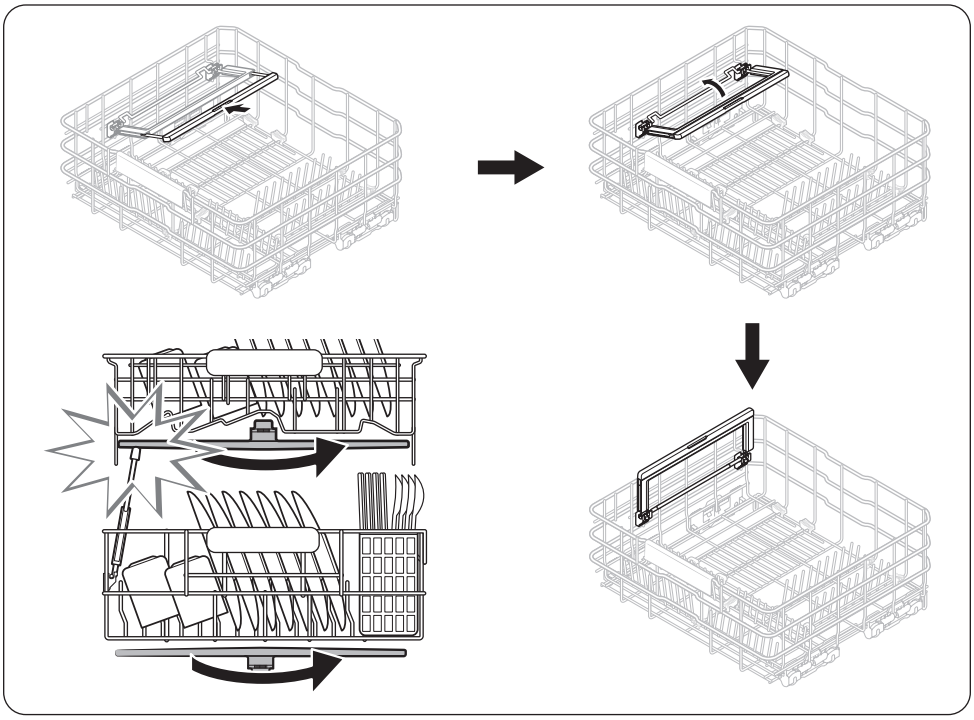

Untitled-2 50 2026-05-26 5:39:49

Loading the upper rack

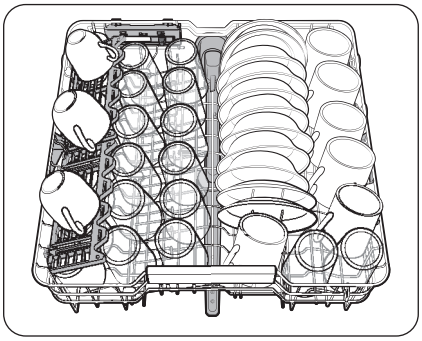

- The upper rack is for small plates, mugs, glasses, and plastic items.
  - You can adjust the position of the upper rack to use the internal space flexibly.

⚠ CAUTION

- Make sure the loaded items do not interfere with the rotation of the middle spray arm.
  - Check the rotation of the spray arm with your hand before starting the dishwasher.
- When loading items, completely pull out the upper rack to prevent bumping the items to the counter while loading.

Using the guide tines

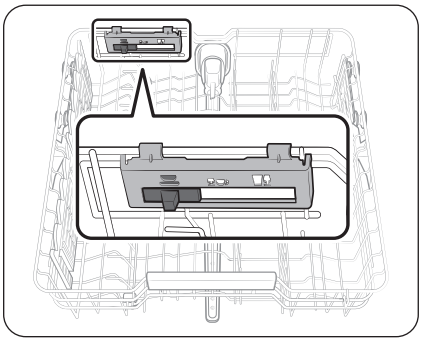

You can use the upper rack's guide tines to load items onto the upper rack in various ways. Move the slider to the right, middle, or left to adjust the guide tines suitable for loading the following items.

- Right: Standard wine glasses
- Middle: Shorter wine glasses or brandy glasses
- Left: Bowls and plates

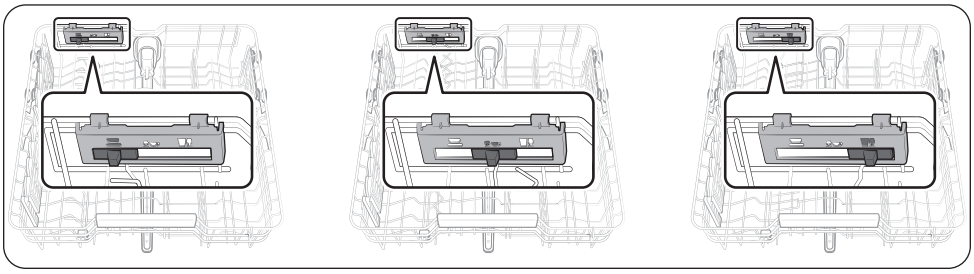

Untitled-2 51 2026-05-26 5:39:50

Before you start

Using the glass support

The glass support is especially suited for wine glasses. Hang wine glasses onto the pegs of the glass support. Fold the glass support back when it is not being used.

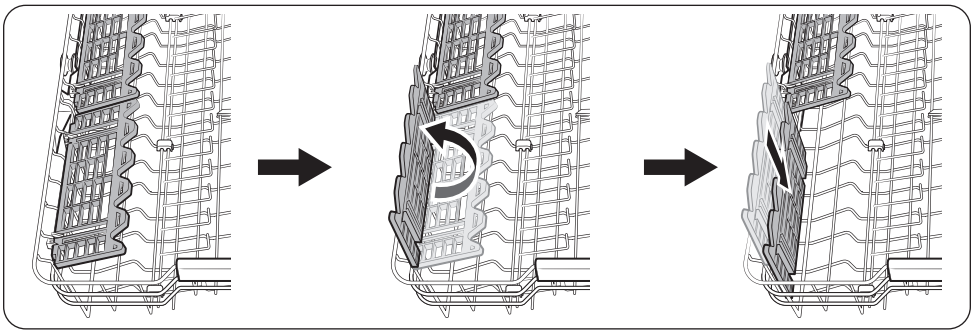

Untitled-2 52 2026-05-26 5:39:51

Adjusting the position of the upper rack

You can adjust the position of the upper rack to adjust the loading space according to the items you load to the upper and lower racks.

⚠ CAUTION

- Adjust the upper rack position before loading items into the rack to prevent damaging the items.
- Make sure to hold both handles when adjusting, or the dishwasher door may not close properly.

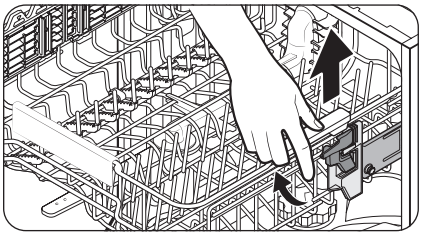

- To raise the upper rack, lift the upper rack. The adjustable handle will latch, and the upper rack will raise.
  - You will have more loading space in the lower rack.

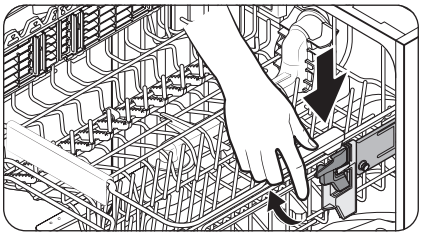

- To lower the upper rack, hold both the adjustable handles located at the left and right sides of the upper rack and then evenly press down.
  - You will have more loading space in the upper rack.

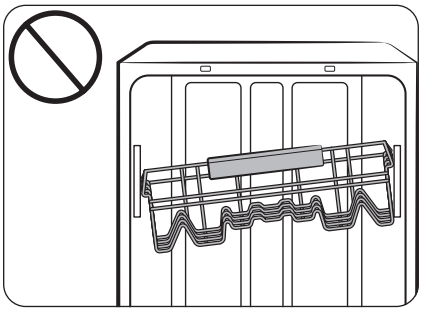

⚠ CAUTION

- Adjust the upper rack position before loading items into the rack to prevent damaging the items.
- You must level the left and right sides of the upper rack. Otherwise, the dishwasher door may not close properly or the dishwasher may not wash properly.

Untitled-2 53 2026-05-26 5:39:52

Before you start

Removing the upper rack (Applicable models only)

⚠ CAUTION

- Do not operate the dishwasher without the upper rack. Otherwise, noises occur and the dishwasher does not operate properly.
- Because the upper rack is removable, insert the upper rack properly to ensure the dishwasher operates normally.

Type 1

Pull the upper rack to the front until it is fully extended, and then lift it slightly to remove it. See the following figures.

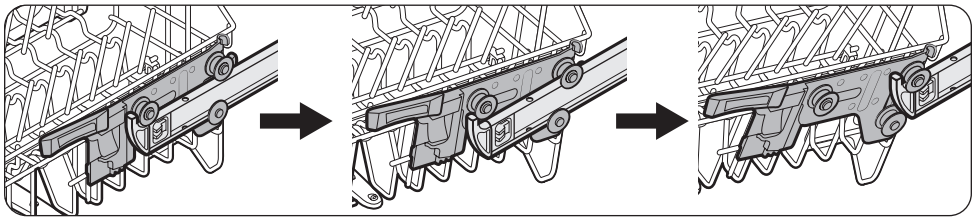

Type 2

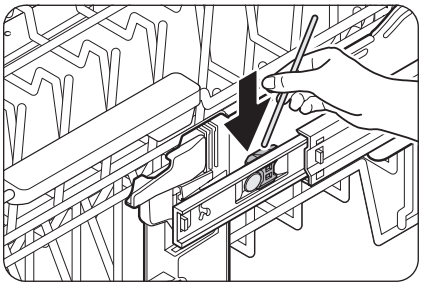

1. Push the hook on the rail holder (on left and right sides).

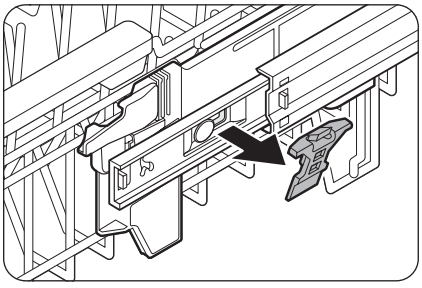

2. Remove the rail holder from the rail (on left and right sides).

Untitled-2 54 2026-05-26 5:39:53

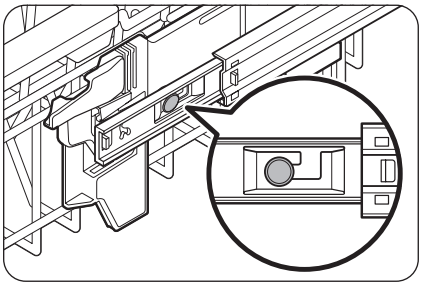

3. Check the position of the shaft on the rail bracket.

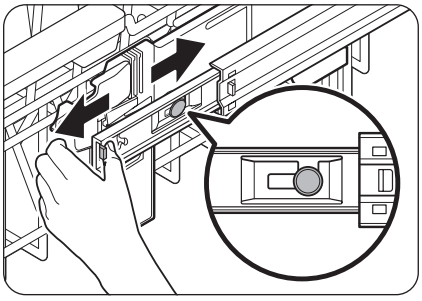

4. Slide the upper rack so that the shaft is positioned at end of the rail bracket.

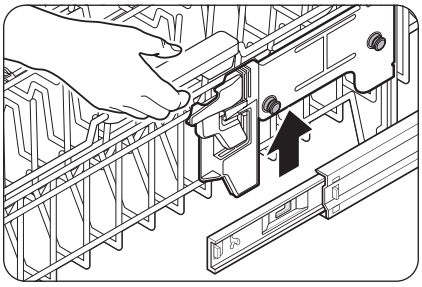

5. Lift the upper rack to remove.

⚠ CAUTION

Be careful not to lose the rail holders during this process.

Untitled-2 55 2026-05-26 5:39:54

Before you start

Loading cutlery rack (Applicable models only)

- The cutlery rack is best for flatware and cooking or serving utensils.
- The design of the cutlery rack may vary depending on the model.

⚠ CAUTION

When using the cutlery rack, ensure that the items you place in it do not obstruct the top spray arm.

Type 1

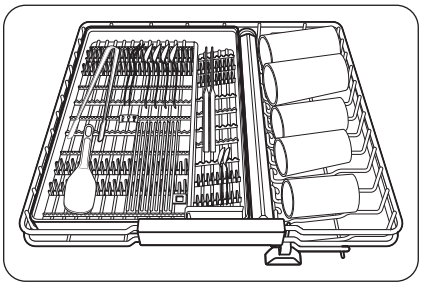

The cutlery rack is suitable for cups up to 130 mm in height. For taller cups, use the upper or lower rack instead.

NOTE

- Place cups with the openings facing the spray nozzles for more effective cleaning.
- If cups are placed with the openings not facing the spray nozzles, the inside of the cups may not be cleaned properly, and water may remain, resulting in incomplete drying.

Type 2

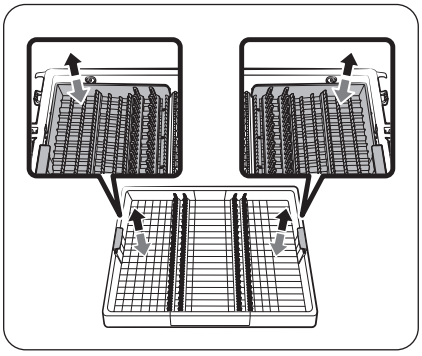

The cutlery rack can be adjusted up and down depending on the type of utensils, as shown in the figure.

Untitled-2 56 2026-05-26 5:39:54

Type 3

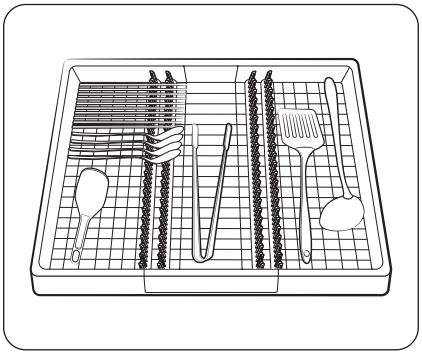

Detergent compartment

You must put detergent into the detergent compartment before every cycle. Put a recommended amount of detergent for the selected cycle for the best performance.

⚠ WARNING

- Do not place dishwasher detergent in your mouth. Avoid breathing in detergent fumes.
  - Dishwasher detergent contains irritants and caustic chemicals that can induce respiratory conditions.
  - If you have consumed dishwasher detergent or inhaled detergent fumes, seek medical attention immediately.
- Keep dishwasher detergent out of children's reach.

⚠ CAUTION

Use dishwasher detergent only. Other types of detergent produce excessive foam, which may decrease the dishwasher's performance or cause it to malfunction

Untitled-2 57 2026-05-26 5:39:55

Before you start

Filling the detergent

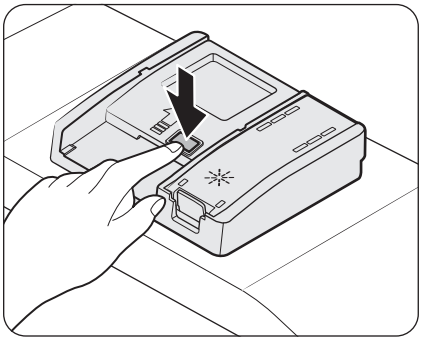

1. Press the button on the detergent compartment cover to open the detergent compartment cover.

NOTE

The cover remains open at the end of a cycle.

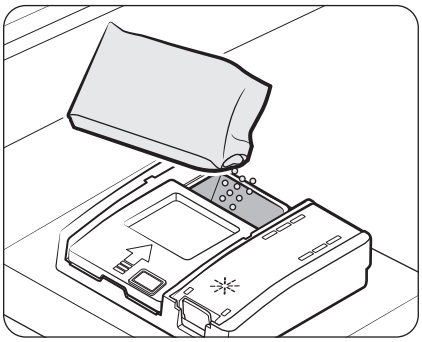

2. Add the recommended amount of detergent into the detergent compartment.

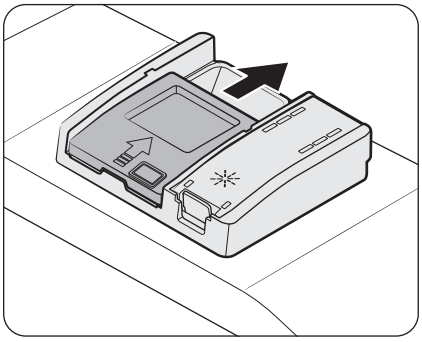

3. Slide the cover in the direction of the arrow to close it.

Untitled-2 58 2026-05-26 5:39:55

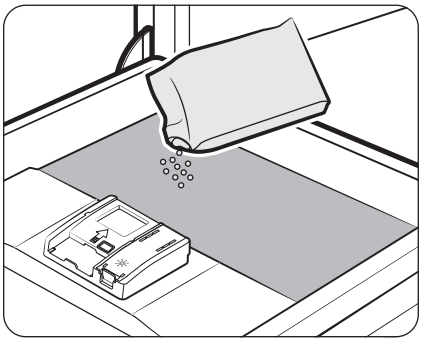

4. If the items are heavily soiled, pour a small amount of detergent onto the door for the pre-wash process to get better cleaning results.

NOTE

The cover opens automatically to dispense the detergent during the wash.

Untitled-2 59 2026-05-26 5:39:56

Before you start

Rinse aid compartment

- Rinse aid improves the drying performance of the dishwasher.
- Refill the rinse aid compartment when you get a rinse refill alert message on the control panel.
- Only use a liquid rinse aid. A Powdered rinse aid will clog the opening of the compartment causing the dishwasher to malfunction.
- You can set the desired amount of rinse aid to dispense during each cycle. (Refer to the "**Settings**" section for more information.)

⚠ CAUTION

- Do not apply any type of detergent to the rinse aid compartment.
- Do not excessively fill the rinse aid compartment as it may overflow during a cycle.

Filling the rinse aid

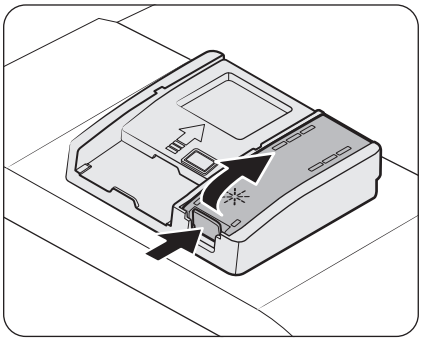

1. Open the rinse aid compartment cover

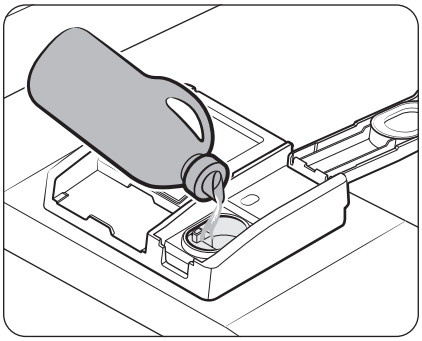

2. Fill the rinse aid compartment with the rinse aid.

⚠ CAUTION

Do not fill the rinse aid over the max line in the compartment. Excess rinse aid can overflow during the wash cycle.

Untitled-2 60 2026-05-26 5:39:56

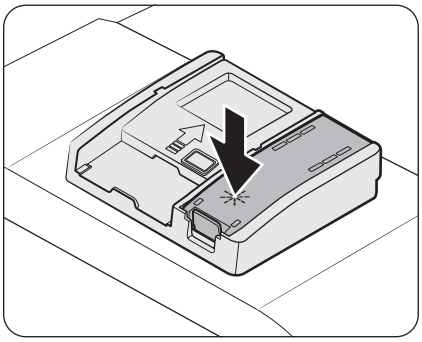

3. Close the rinse aid compartment cover.

Salt storage

⚠ CAUTION

- Use dishwasher-specific salt only. Do not use any other type of salt or solvent as it may damage the salt storage and the water softening system.
- To prevent corrosion caused by an excessive amount of salt or salty water, always fill the salt storage before a washing cycle gets started.

Filling the salt storage

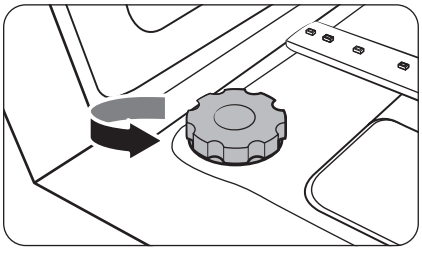

1. Open the door.
2. Turn the cap counterclockwise to open.

NOTE

When you open the salt storage lid, water inside the storage may flow out.

Untitled-2 61 2026-05-26 5:39:57

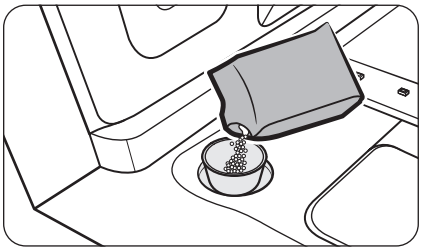

3. Fill the salt storage with water (only required when using the dishwasher for the first time).
4. Fill the salt storage with dishwasher salt.
   - Use the provided Salt guide to prevent salt from spilling inside the dishwasher.

⚠ CAUTION

- The maximum capacity is about 1 kg. Do not exceed the capacity.
- Exceeding the capacity may affect the dishwasher's performance.

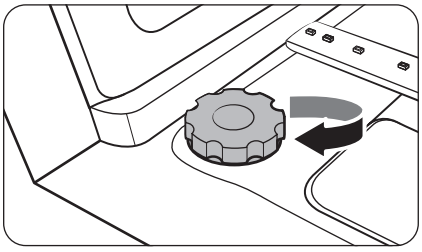

5. Turn the cap clockwise to close.

NOTE

- To clean excess salt or salt water from the dishwasher, run the Express ▷▷ cycle.
  Do not use Pre Wash or Baby Care cycle right after refilling the salt storage.
- Depending on the size of the salt grains, it may take a while for the salt to dissolve and the indicator ( ) to turn off.

SmartThings

Wi-Fi connection

On your phone, go to Settings and connect to your home Wi-Fi network.

Download

On an app market (Google Play Store, Apple App Store, Samsung Galaxy Apps), find the SmartThings app with a search term of “SmartThings”. Download and install the app on your device.

NOTE

- The SmartThings app is designed for Android 8.0 or later, IOS 13.0 or later.
- For improved performance, the SmartThings app is subject to change without notice, or discontinued support according to the manufacturer’s policy.

Untitled-2 62 2026-05-26 5:39:58

Log in

You must first log into SmartThings with your Samsung account. To create a new Samsung account, follow the instructions on the app. You don't need a separate app to create your account.

NOTE

If you have a Samsung account, use the account to log in. A registered Samsung phone user automatically logs in.

To register your device to SmartThings

1. Make sure your phone is connected to a wireless network.
2. Run **SmartThings** on your phone. iPhone users are required to provide the login information each time they access the app.
3. When a message of "**A new device is found.**", select **Add**.
4. If no message appears, select **+** and select your dishwasher in a list of devices available. If your dishwasher is not listed, select **Device Type** › **Specific Device Model**, and then add your dishwasher manually.
5. Follow the on-screen instructions to complete the connection process for your dishwasher. Press and hold **Smart Control** for more than 5 seconds until the "**AP**" message appears on the display. Your dishwasher will be registered with the app.
6. When the process is complete, your dishwasher will appear in the list of devices on your SmartThings App.
7. Tap the dishwasher icon to open the dishwasher page.
8. When a network connection is established, the Wi-Fi icon lights up on your dishwasher.

Dishwasher app

Integrated control: You can monitor and control your dishwasher both at home and on the go.

- Select the dishwasher icon on SmartThings. The dishwasher page appears.
- Check the operation status or notifications related to your dishwasher, and change options or settings if necessary.

NOTE

- This device is designed for household use only (Class B), and can be used in all residential areas.
- This device may cause wireless interference, and neither the manufacturer nor the installer of this device can provide a safety measure of any kind.
- Recommended encryption methods are WPA/TKIP and WPA2/AES. Newly developed Wi-Fi protocols or unapproved Wi-Fi protocols are not supported.
- The reception sensitivity of a wireless network may be affected by surrounding wireless environments.
- If your Internet provider has registered the MAC address of your PC or the modem module for permanent use, your Samsung dishwasher fails to connect to the Internet. If this happens, contact your Internet provider.
- The Internet firewall may interrupt your Internet connection. If this happens, contact your Internet provider.

Untitled-2 63 2026-05-26 5:39:58

Before you start

- If Internet failure continues after following the measurement of your Internet provider, contact a local Samsung retailer or service centre.
- For installing wired and wireless routers, refer to the user manual of the router you use.
- Samsung dishwasher supports the Wi-Fi 2.4 GHz protocols.
- Samsung dishwasher supports the IEEE802.11 b/g/n (2.4 GHz), Soft-AP protocols. (IEEE802.11n is recommended)
- An unapproved wired/wireless router may fail to connect to Samsung dishwasher.
- The SmartThings app is available on Android devices with OS 8.0 or higher and iOS devices with iOS 13 or higher. The app is optimised for Samsung phones (Galaxy S and Note series).
- Some functions of the app may operate differently on third-party devices.
- The app is subject to change without notice for improved performance.
- In addition, further updates on the app or the function in the app may stop caused by usability and security reasons, even if updates are currently supported on your OS.
- Your device uses non-harmonised frequency and is intended for use in all European countries. The WLAN can be operated in the EU without restriction indoors, but cannot be operated outdoors in France.
- You can easily install the SmartThings app or use the product with your phone by scanning the QR code on the attached label.
- Hereby, Samsung Electronics, declares that the radio equipment type appliance is in compliance with Directive 2014/53/EU. The full text of the EU declaration of conformity is available at the following internet address: The official Declaration of conformity may be found at http://www.samsung.com, go to Support > Search Product Support and enter the model name.
- The overall standby power consumption is 2.0 W in which all network ports stay in “on” condition.
  - Data determined according to standard EN 50564 and Regulation (EC) No 1275/2008

Wi-Fi	
Frequency range	**Transmitter power (Max)**
2412 MHz - 2472 MHz	20 dBm

SmartThings functions

Category	Function	Description
Monitoring	Washing status	You can check the current cycle and its options, and the remaining cycle time.
	Smart Control	The Smart Control status is shown for the dishwasher.
	Energy monitor	Use this to monitor the energy consumption status.

Untitled-2 64 2026-05-26 5:39:58

Category	Function	Description
Control	Start/Pause/Cancel	Select a cycle and necessary options, and then select Start/Pause/Cancel to start an operation, to stop temporarily, or to cancel the current operation.
	Delay Start	Set Delay Start to start the cycle at a scheduled time (up to 24 hours).
	Auto Open Door (Applicable models only)	You can turn this function off, or adjust the Auto open door pressure setting from one of the following three levels. • Light (Default), Medium / Firm
	Lighting (Applicable models only)	Use this to set the brightness level of the light on the door.
Notification	Cycle completed	Notifies you when the current cycle is complete.
	Detergent	Notifies you if the dishwasher is out of rinse aid.

Untitled-2 65 2026-05-26 5:39:58

Before you start

Open Source Announcement

The software included in this product contains open source software.

The following URL http://opensource.samsung.com/opensource/SMART_TP1_0/seq/0 leads to open source license information as related to this product.

Security updates information

Security updates are provided to strengthen the security of your device and protect your personal information. For more information on security updates, visit https://security.samsungda.com.

- The website supports only some languages.

Untitled-2 66 2026-05-26 5:39:59

Operations

Control panel

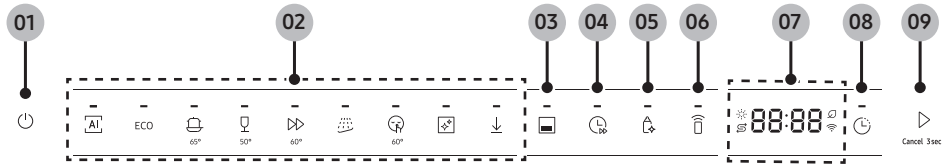

01 Power ⏻	• Tap this button to turn the dishwasher on or off.
02 Cycles	• You can select the desired wash cycle. - For more information on the wash cycles, see the "**Cycle overview**" section on page **69**.
03 Half Load ▬	• You can turn the Half Load ▬ option on or off. - Use this option to run a wash cycle with fewer items, using the lower rack. - This option is unavailable with the Machine Care ✧, Baby Care*, Drinkware* and Pre Wash 〰 cycles. *: Downloaded cycle
04 Speed Booster ⏲»	• You can turn the Speed Booster ⏲» option on or off. - Use this option to reduce the cycle time. - This option is unavailable with the Pre Wash 〰, Machine Care ✧, Baby Care* and Drinkware* cycles. *: Downloaded cycle
05 Hygiene Plus	• You can turn the Hygiene Plus option on or off. - Use this option to increase the water temperature up to 75 °C in the final rinse process for high-temperature sanitization. - This option is unavailable with the Delicate 🍷, Machine Care ✧, Plastic*, Baby Care* and Pre Wash 〰 cycles. *: Downloaded cycle
06 Smart Control	• You can turn the Smart Control option on or off - Turning on the Smart Control option allows remote access to the dishwasher.

Untitled-2 67 2026-05-26 5:40:01

07 Display	• You can check various information on the display. - You can check the operation time of each cycle, remaining operation time, alert icons, information codes, etc. - For more information on the icons, see the "**Icon descriptions**" section on page **68**. - For more information on the information codes, see the "**Information codes**" section on page **86**.
08 Delay Start	• You can start the dishwasher operation at a desired time. - Tap this button to select from 1 to 24 hours to delay the start of the dishwasher. - After selecting the desired starting time, you must tap **Start** ▷ and close the door. - To change the delay start setting, you must restart the dishwasher. **NOTE** You must select the desired wash cycle before setting Delay Start.
09 Start ▷ (Cancel)	• Tap this button, and then close the door to start the operation. - **Cancel**: Touch and hold this button for 3 seconds to cancel the current cycle and drain the dishwasher.

Icon descriptions

Rinse Refill		• This icon turns on to alert you to refill the rinse aid compartment.
Salt Refill		• This icon turns on to alert you to refill the salt storage.
AI Energy Mode		• This icon turns on when the AI Energy Mode is activated. • You can enable or disable the AI Energy Mode on the SmartThings app. Once this mode is enabled, it will be activated when you select the cycle supporting this mode. • AI Energy Mode helps reduce power consumption but takes a longer cycle time. **NOTE** The AI Energy Mode may be unavailable in some countries.
Wi-Fi		• This icon turns on when the dishwasher is connected to the Wi-Fi.

Untitled-2 68 2026-05-26 5:40:02

Cycle overview

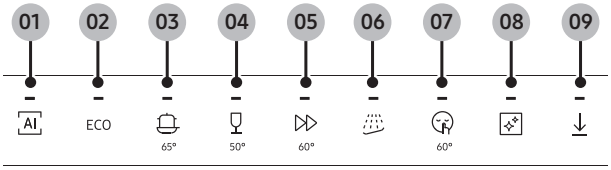

* The temperature under the buttons indicates the highest water temperature during the cycle and may differ depending on the model.

Cycle	Description
01 AI AI	• The dishwasher sets the appropriate wash time and water temperature according to the detected soil level for effective washing.
02 ECO*	• This cycle is for washing normally soiled dishes with less energy use. - This cycle takes a longer time to complete for less energy consumption.
03 Intensive	• This cycle is for washing heavily soiled items.
04 Delicate	• This cycle is for lightly soiled, fragile items such as glasses. - The items must be dishwasher-safe.
05 Express	• This cycle is best for quickly washing normally soiled, daily-using items.
06 Pre Wash	• This cycle is for pre-washing the items with cold water to remove dirt before running another wash cycle.
07 Extra Silence	• This cycle washes the items more quietly than standard wash cycles. The operation time takes a bit longer to minimise the operation noise.
08 Machine Care	• This cycle is for cleaning the inside of the dishwasher. • Do not operate this cycle with the racks loaded with any items. Empty the dishwasher before running this cycle.
09 Downloaded (Applicable models only)	• You can download a cycle from the SmartThings app and use this button to select the downloaded cycle. - For more information on downloading the cycle, see the "**Downloading a cycle from the SmartThings app**" section on page **70**.

Untitled-2 69 2026-05-26 5:40:03

Operations

* The values for the ECO program have been obtained following the test standard EN 60436:2020. The values given for the other programs are indicative only.

Downloading a cycle from the SmartThings app

You can download and use the cycles available from the SmartThings app.

NOTE

Some models may have applied one of the available cycles as a default and may not need to download a cycle.

1. Turn on the dishwasher and make sure it is connected to a Wi-Fi.
2. Turn on the SmartThings app on your mobile device and select the dishwasher.
3. Tap **Downloaded cycle**.
4. Select the cycle you want to download to the dishwasher.
5. Tap **Apply**.

NOTE

You can check the descriptions of the each cycle on the SmartThings app.

Untitled-2 70 2026-05-26 5:40:03

Operating a cycle

1. Open the door and then load the dishwasher. Make sure to remove food remains and waste on the dishes.
   - Do not load the dishwasher if you are going to use the Machine Care cycle.
2. Apply detergent to the detergent dispenser. For better results, add rinse aids.
   - Skip this step if you are going to use the Baby Care* cycle.
   - *: Downloaded cycle
3. Tap **Power** to turn on the dishwasher.
4. Tap the desired cycle button.
5. Select the desired options.
   - Tap **Half Load**, **Speed Booster**, **Hygiene Plus**, or **Delay Start** to enable or disable each option.
   - Some options may be unavailable depending on the cycle.
   - Make sure you have loaded only the lower basket to use the Half Load option.
6. Tap **Start**, and then close the door.
   - The dishwasher starts the cycle after draining for a few seconds.

NOTE

- To change the cycle after it has started, touch and hold **Start** for 3 seconds to cancel the cycle. Then, select a new cycle.
- The default cycle is ECO.
- To resume after you have opened the door to stop the dishwasher while operating, simply close the door.

Untitled-2 71 2026-05-26 5:40:04

Operations

Settings

You can change your settings to your preference according to the following instructions.

1. Tap **Power** to turn on the dishwasher.
2. Touch and hold **Hygiene Plus** and **Delay Start** simultaneously for 3 seconds to enter the settings menu.
   - The current sound setting appears on the display.
3. Tap **Hygiene Plus** to select the desired settings. Then, tap **Delay Start** to change the options.
   - Refer to the following table for available settings and their options.

Settings	Options	Description
Sound	U1 - U3	• Adjust the sound volume from one of the following three levels: U1 (Low), U2 (Med), U3 (High). • The default setting is 'U3'.
	U0	• The sound is off.
Brightness (Applicable models only)	b5 - b0	• The display brightness increases as the number increases. • The default setting is 'b5'.
Dose per Rinse	F6 - F0	• The amount of the rinse aid increases as the number increases. • The default setting is 'F4'.
Water hardness (Applicable models only)	L0 - L5	• Select the water hardness level according to the water hardness in your area. • Refer to the "**Determining the water hardness level (Applicable models only)**" section to determine the water hardness setting.
Auto Release Dry	A1	• Auto Release Dry mode is on. • To improve drying results, the door opens automatically in the drying process. • Once the door is opened by Auto Release Dry mode, it cannot be closed manually for 2 minutes. (Applies only to models without the Auto Open Door feature.)
	A0	• Auto Release Dry mode is off.
Auto Open Door (Applicable models only)	S1 - S3	• Adjust the Auto Open Door sensitivity setting from one of the following three levels: S1 (Light), S2 (Medium), S3 (Firm). • The higher the level number, the more firmly you need to press the door to activate it.
	S0	• Auto Open Door function is off.

Untitled-2 72 2026-05-26 5:40:04

4. After changing the settings, tap **Power** or touch and hold **Hygiene Plus** and **Delay Start** simultaneously for 3 seconds to apply the changes and exit the settings menu.

Determining the water hardness level (Applicable models only)

NOTE

If the water hardness level in your area is 0, you do not need to use dishwasher-specific salt. However, you must set the water hardness setting for the dishwasher to 0.

Level	Water hardness level				Water hardness Regeneration softening/ washing cycle (ECO cycle)	Salt injection
	°dH	°TH	mmol/L	Range		
0	<6	<10	<1.0	No recycle	No	No
1	6-14	10-25	1-2.5	1/8	Yes	Yes
2	14-23	25-40	2.5-4.0	1/5	Yes	Yes
3	23-31	40-55	4.0-5.5	1/3	Yes	Yes
4	31-40	55-70	5.5-7.0	1/2	Yes	Yes
5	>40	>70	>7.0	1/1	Yes	Yes

For better washing results, we recommend softening the water. Hard water contains impurities that can reduce the washing performance. You should soften the water if the supplied water is harder than 1.0 mmol/L (6 °d – German scale).

- To soften the water, you need dishwasher-specific salt and adjust the water hardness level according to your area. For more information about the water hardness level in your area, contact your local water department.
- If the hardness level of the supplied water supply is unsteady, set the water hardness level to its highest. For example, if the water hardness reading ranges from 6.7 mmol/L to 9.0 mmol/L, set the water hardness level for the highest value, which is 9.0 mmol/L.
- The dishwasher's default water hardness level is 4 (5.5-7.0 mmol/L). If this setting matches the water hardness level in your area, you do not need to change it.
- Regeneration occurs during the drying process with an additional 4.3-4.9 L of water use and an extra 24-29 minutes of operation time. The energy used may be increased but this should be by an insignificant amount.

Untitled-2 73 2026-05-26 5:40:04

Operations

Special features

Auto Open Door function (Applicable models only)

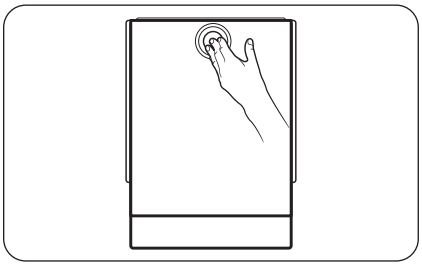

1. Gently press and release the center of the top part of the door. The door will then automatically open slightly.
   You can adjust the Auto open door pressure setting in the SmartThings app. See the "**SmartThings functions**" section for more information.
2. When the door slightly opens, hold the top part of the door and fully open it.
   - The door does not close automatically. Close the door manually after use.

NOTE

To open the door during a cycle, press and hold the center of the top part for about 1 second until the release alarm sounds.

⚠ CAUTION

- Do not push or force stop the door while it is opening automatically. It may cause the product to malfunction.
- If the door resists opening after repeated door opening, wait for about a minute and then try again. (It may be hard to open the door immediately after closing it due to air pressure change inside the dishwasher which occurs when you open and close the door.)

Untitled-2 74 2026-05-26 5:40:04

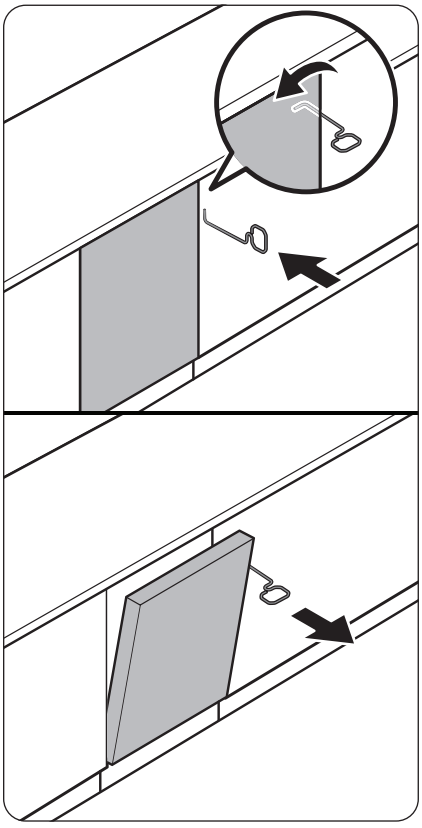

If you are unable to use the Auto Open Door function because of a power failure or other reasons, use the provided Door opening tool to open the door manually.

Untitled-2 75 2026-05-26 5:40:04

Maintenance

Cleaning

Keep the dishwasher clean to improve performance, reduce unnecessary repairs, and lengthen its lifecycle.

Exterior

Clean spills on the surface of the dishwasher immediately. Use a soft, damp cloth on the control panel to gently wipe away spills and dust.

⚠ CAUTION

- Do not use benzene, wax, thinner, chlorine bleach, alcohol, or other chemical substances. These materials may discolour the surface of the dishwasher and cause stains.
- The dishwasher has electric parts inside. Do not spray water directly onto the dishwasher. Protect electrical components from water.
- For a stainless-steel door panel, use a stainless-steel cleaner for home appliances and a clean, soft cloth.

Interior

- Clean the interior of the dishwasher on a regular basis to remove any dirt or food particles. Wipe inside the dishwasher and inside the door with a wet dishcloth.
- Use the **Machine Care** cycle every month to keep the interior clean and prevent bad odours.
- If your tap water is hard, you can prevent limescale inside the dishwasher by adding citric acid to the detergent when operating the dishwasher.

⚠ CAUTION

- Do not remove the front seal (the long rubber seal enclosing the opening of the dishwasher). The seal keeps the inner side of the dishwasher sealed.
- Use a damp cloth to remove the lime scale or grease deposits inside the dishwasher. Alternatively, apply some detergent, and then run an empty cycle using the highest rinse temperature.

Untitled-2 76 2026-05-26 5:40:04

Spray arms

To prevent the spray arms from being clogged or if the spray arms are clogged, remove and clean each spray arm. Use caution when removing the spray arms as they may break.

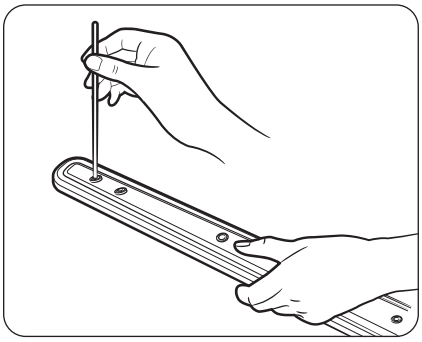

NOTE

If the holes on the spray arms are clogged, use a thin pointed tool to clear them. To avoid damaging the hole walls, use a tool smaller than the holes and do not use a hot needle.

Top spray arm

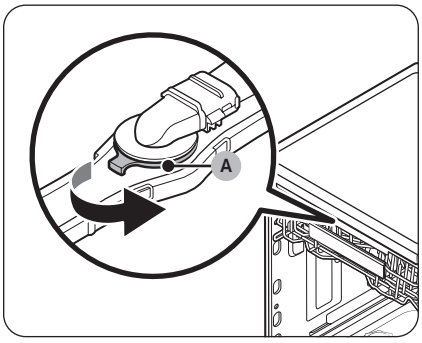

1. Open the door.
2. Remove the upper rack.
   - Refer to the "**Removing the upper rack (Applicable models only)**" section for detailed instructions.
   - The top spraying arm is attached on the top interior wall
   - If your model has a cutlery rack, pull it out to access the top spraying arm.
3. Hold the **handle (A)**, and then push it to the right to release the top spray arm.
4. Unclog and clean the spray arm.
5. Reinsert the spray arm, and then push the **handle (A)** to the left to tighten it.
6. Rotate the spray arm to make sure it is correctly assembled.

Untitled-2 77 2026-05-26 5:40:05

Maintenance

Cup wash spray nozzle

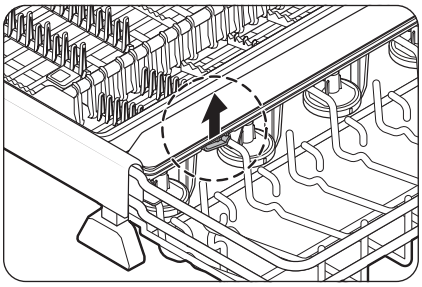

1. Release the hook at the front of the cup wash spray nozzle.
2. Slide the nozzle toward the rear to remove it from the 3rd rack.

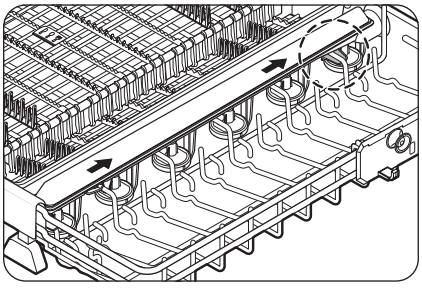

3. Unclog and clean the nozzle.
4. Assemble the nozzle.
   - Secure the rear hook (as shown in the figure) by attaching it to the 3rd rack, then slide the nozzle back into place until it clicks securely.

Middle spray arm

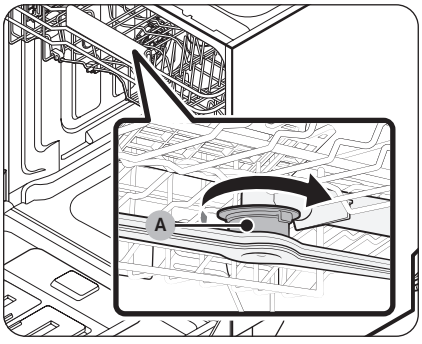

1. Open the door, and then pull out the upper rack.
   - The middle spray arm is attached underneath the upper rack.
2. Hold the **handle (A)**, and then push it to the right to release the top spray arm.
3. Unclog and clean the spray arm.
4. Reinsert the spray arm, and then push the **handle (A)** to the left to tighten it.
5. Rotate the spray arm to make sure it is correctly assembled.

Untitled-2 78 2026-05-26 5:40:06

Bottom spray arm

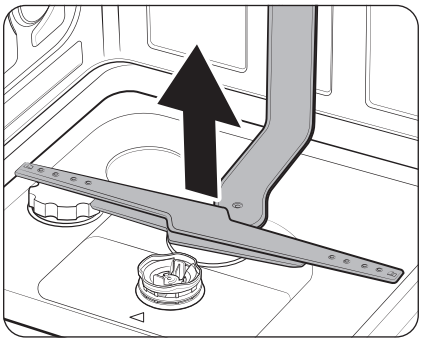

1. Open the door.
2. Remove the lower rack.
   - The bottom spray arm is attached on the bottom interior wall.
3. Pull the bottom spray arm to remove it.
4. Unclog and clean the spray arm.
5. Reinsert the spray arm.
6. Rotate the spray arm to make sure it is correctly assembled.

Filters

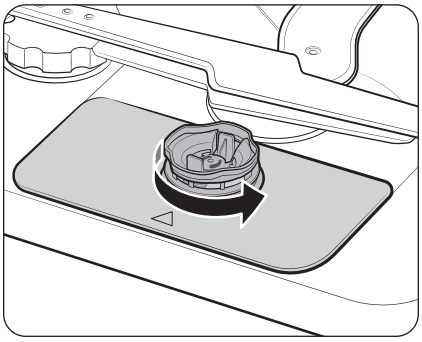

1. Open the door, and then remove the lower rack.
2. Turn the coarse filter anticlockwise to unlock the assembled filters.

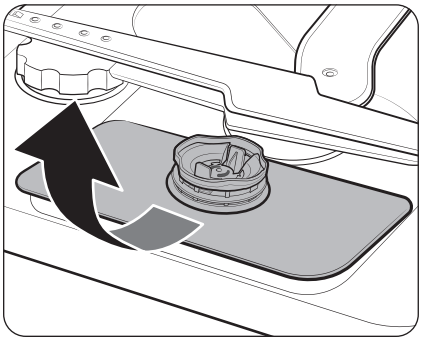

3. Lift the assembled filters and remove them from the bottom of the dishwasher.

Untitled-2 79 2026-05-26 5:40:07

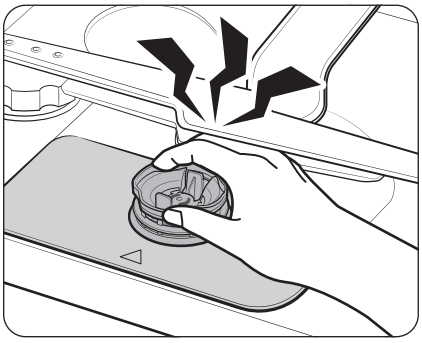

⚠ CAUTION

Watch your hand when removing the filters. Your hand could get caught between the bottom spraying arm and the filters.

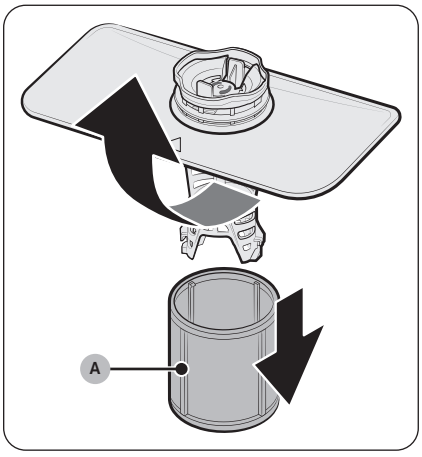

4. Disassemble the **micro filter (A)**.

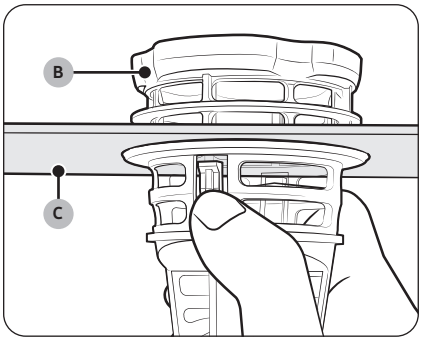

5. Disassemble the **coarse filter (B)** and the **fine filter (C)**.
   - While pressing the two release tabs on the **coarse filter (B)**, lift it to remove.

Untitled-2 80 2026-05-26 5:40:08

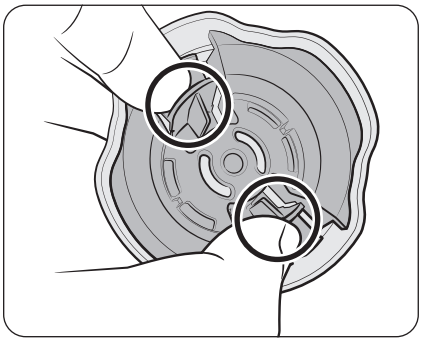

6. Remove the coarse filter cap.
   - While pressing the two release tabs on the cap, lift to remove it.

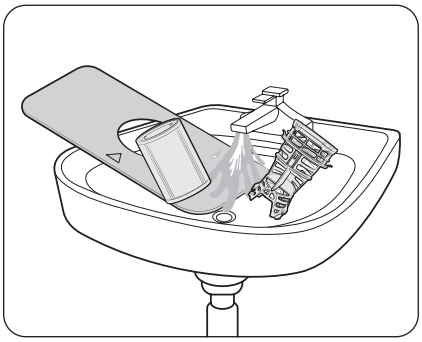

7. Thoroughly clean all the disassembled filters in running water.
8. Dry the filters before putting them back into the dishwasher.

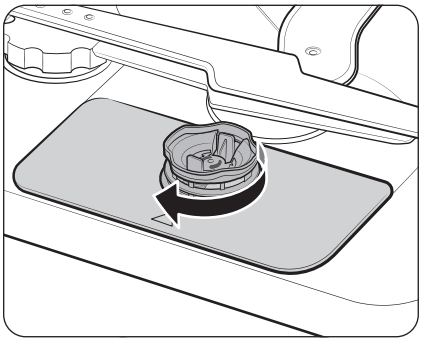

9. Assemble all the filters and put them back into the dishwasher.
10. Turn the filter handle clockwise to lock the filters.

Untitled-2 81 2026-05-26 5:40:09

Maintenance

Drain pump

If the dishwasher fails to drain (**5C** is displayed) because the drain pump is clogged with foreign matter or there is an abnormal noise coming from the drain pump, you must unclog and clean the drain pump according to the following instruction.

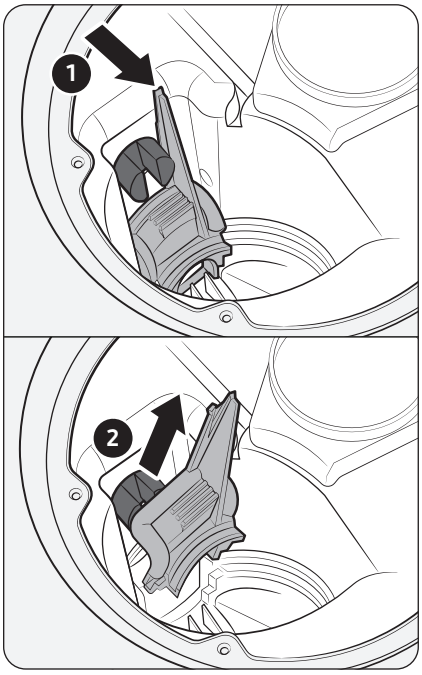

1. Remove the lower rack.
2. Refer to the "**Filters**" section to remove the filters.
3. Remove the drain-pump cover.
   - Push the handle in the direction of the arrow (1), and then pull it up (2).
4. Check the pump's impeller, and then clean it thoroughly.
5. Put the drain-pump cover in the reversed order or removal.
   - Make sure you hear a clicking sound.

Long-term care

If you will not use the dishwasher for an extended period of time, first drain the unit completely, and then disconnect the water hose. Shut off the water supply valve and the circuit breaker. Water remaining in the hoses or the internal components can damage the dishwasher.

Untitled-2 82 2026-05-26 5:40:09

Troubleshooting

Checkpoints

If you encounter an issue with the dishwasher, first check the table below and try the suggestions.

Following the repair by a non-authorised service provider, self-repair or non-professional repair of the product, Samsung is not liable for any damage to the product, any injury or any other product safety issue caused by any attempt to repair the product which does not carefully follow these repair and maintenance instructions. Any damage to the product caused by an attempt to repair the product by any person other than a Samsung certified service provider will not be covered by the warranty

Symptom	Possible cause	Action
The dishwasher does not start.	The door is not completely closed.	• Make sure the door is latched and completely closed. • Make sure the middle spray arm water supply tube is properly connecting to the water outlet at the rear interior wall. • Make sure the upper rack is properly inserted.
	The power cord is not connected.	• Connect the power cord.
	Water is not being supplied.	• Make sure the water supply valve is open.
The dishwasher has bad odours.	Water remains from the previous cycle.	• With the dishwasher empty, add detergent, and then run the Express ⏩ cycle.
Water remains in the dishwasher after a cycle has finished.	The drain hose is kinked or clogged	• Straighten and unclog the drain hose.

Untitled-2 83 2026-05-26 5:40:09

Troubleshooting

Symptom	Possible cause	Action
Food remains on dishes.	An incorrect cycle was selected.	• Select a cycle according to the soil level of the dishes as instructed in this manual.
	The filters are clogged or not correctly fastened.	• Clean the filters. • Make sure the filters are correctly fastened.
	An insufficient amount of detergent was used.	• Use the correct amount of detergent for each load.
	The water pressure is low.	• Make sure the pressure is between 0.05-0.8 Mpa.
	The spray arms are clogged.	• Clean and unclog the spray arms.
	Dishes are improperly loaded or overloaded.	• Arrange the dishes so they do not interfere with the spray arms or the detergent dispenser.
Dishes are not dried well enough	The rinse aid compartment is empty.	• Fill the rinse aid compartment with the rinse aid.
	Not enough rinse aid was used.	• Change the Dose per Rinse setting.
	Too many dishes were loaded.	• Overloading may reduce the drying performance. Load your dishes as recommended.
	Glasses and cups spilled water onto other dishes while being unloaded.	• Empty the lower rack first, and then the upper rack. This will avoid water dripping from the upper rack onto the dishes in the lower rack.
	Multiple detergent tablets were used without selecting the **Hygiene Plus** option.	• Select the **Hygiene Plus** option or use a rinse aid.
The dishwasher is too noisy.	The detergent compartment is opened to dispense the detergent.	• This is normal.
	The drain pump is operating.	• This is normal.
	The dishwasher is not level.	• Make sure the dishwasher is level.
	The spray arm bumps against the dishes, creating a chopping sound.	• Rearrange the dishes.

Untitled-2 84 2026-05-26 5:40:09

Symptom	Possible cause	Action
A layer of the yellow or brown stain remains on dishes.	Coffee and tea soils.	• Use a cycle with a higher temperature water.
The display is not turning on.	The power cord is not connected.	• Check power supply is present.
The spray arms do not rotate smoothly.	The spray arms are clogged with food particles.	• Clean the spray arms.
The dishwasher bubbles up and the foam remains too much on the front.	Regular detergent was used instead of dishwasher detergent.	• Always use dishwasher detergent. • Turn the dishwasher off and remove the bubbles.

Untitled-2 85 2026-05-26 5:40:09

Troubleshooting

Information codes

If the dishwasher fails to operate, you may see an information code on the display. Check the table below and try the suggestions.

Code	Action
LC	**Leakage check** • Close the water supply valve. Go to your home's circuit breaker panel, and set the dishwasher's circuit breaker switch to off. Contact the installer to repair. If the issue continues, contact a local Samsung service centre.
4C	**Water supply check** • Check if the water supply valve is closed, if the water supply is suspended, or if the water inlet valve or line is frozen or clogged by foreign particles. If the issue continues, contact a local Samsung service centre.
HC	**High temperature heating check** • Functional check. With the dishwasher empty, add detergent, and then run a cycle. If the issue continues, go to your home's circuit breaker panel, and set the dishwasher's circuit breaker switch to off. Contact a local Samsung service centre.
3C	**Washing pump check** • Abnormal working with washing pump. If the issue continues, contact a local Samsung service centre.
1C	**Low-water level check** • Check if the filter is clogged. • Make sure to use dishwasher detergent. • Make sure that the dishes are loaded evenly. • Turn the dishwasher off and turn it on again. Then, try again. • If the issue continues, contact a local Samsung service centre.
5C	**Drain pump check** • Check drain pump and drain pipe. If it is jammed, clean it. If the issue continues, contact a local Samsung service centre.
9C9	**The IPM is overheating** • Unplug the appliance and contact a Customer Service centre.

If any information code keeps appearing on the screen, contact a local Samsung service centre.

Untitled-2 86 2026-05-26 5:40:09

Appendix

Cycle chart

DW80H77*3** models

Cycle	AI	ECO
Cycle sequence	Pre wash (40 °C) → Main wash (52-58 °C) → Rinse → Hot Rinse (53-58 °C) → Dry → End	Main wash (43 °C) → Rinse → Hot Rinse (33 °C) → Dry → End
Water consumption (L)	7.6-16.4	7.5
Energy consumption (kWh)	0.80-1.30	0.435
Cycle time (min.)	100-148	405

Cycle	Intensive	Delicate	Express
Cycle sequence	Pre wash (45 °C) → Main wash (65 °C) → Rinse → Hot Rinse (63 °C) → Dry → End	Pre wash (40 °C) → Main wash (50 °C) → Rinse → Hot Rinse (50 °C) → Dry → End	Main wash (60 °C) → Rinse (46 °C)→ Hot Rinse (60 °C) → Dry → End
Water consumption (L)	14.2	10.4	9.8
Energy consumption (kWh)	1.45	0.80	1.08
Cycle time (min.)	175	117	89

Cycle	Pre Wash	Machine Care	Extra Silence
Cycle sequence	Pre wash → End	Pre wash → Main wash (70 °C) → Rinse → Hot Rinse (70 °C) → Dry → End	Pre wash → Main wash (60 °C) → Rinse → Hot Rinse (55 °C) → Dry → End
Water consumption (L)	6.6	12.9	12.0
Energy consumption (kWh)	0.01	1.40	1.08
Cycle time (min.)	15	131	263

Cycle	Downloaded cycle			
	Plastic	Baby Care	Pots and Pans	Drinkware
Cycle sequence	Main wash (60 °C) → Rinse → Hot Rinse (60 °C) → Dry → End	Pre wash → Hot Rinse (75 °C) → Dry → End	Pre wash (45 °C) → Main wash (68 °C) → Rinse → Hot Rinse (68 °C) → Dry → End	Main wash (60 °C) → Rinse → Hot Rinse (53 °C) → Dry → End
Water consumption (L)	11.3	7.4	13.9	9.4
Energy consumption (kWh)	1.10	1.02	1.53	0.71
Cycle time (min.)	92	91	146	37

Untitled-2 87 2026-05-26 5:40:09

Appendix

DW90H79*1** models

Cycle	AI AI	ECO
Cycle sequence	Pre wash (40 °C) → Main wash (52-58 °C) → Rinse → Hot Rinse (53-58 °C) → Dry → End	Main wash (43 °C) → Rinse → Hot Rinse (35 °C) → Dry → End
Water consumption (L)	7.7-16.6	7.5
Energy consumption (kWh)	0.80-1.30	0.488
Cycle time (min.)	103-156	405

Cycle	Intensive	Delicate	Express
Cycle sequence	Pre wash (45 °C) → Main wash (65 °C) → Rinse → Hot Rinse (63 °C) → Dry → End	Pre wash (40 °C) → Main wash (50 °C) → Rinse → Hot Rinse (50 °C) → Dry → End	Main wash (60 °C) → Rinse (46 °C)→ Hot Rinse (60 °C) → Dry → End
Water consumption (L)	14.4	10.4	9.8
Energy consumption (kWh)	1.45	0.80	1.08
Cycle time (min.)	181	117	92

Cycle	Pre Wash	Machine Care	Extra Silence
Cycle sequence	Pre wash → End	Pre wash → Main wash (70 °C) → Rinse → Hot Rinse (70 °C) → Dry → End	Pre wash → Main wash (60 °C) → Rinse → Hot Rinse (55 °C) → Dry → End
Water consumption (L)	6.6	12.9	12.0
Energy consumption (kWh)	0.01	1.40	1.08
Cycle time (min.)	15	131	263

Cycle	Downloaded cycle			
	Plastic	Baby Care	Pots and Pans	Drinkware
Cycle sequence	Main wash (60 °C) → Rinse → Hot Rinse (60 °C) → Dry → End	Pre wash → Hot Rinse (75 °C) → Dry → End	Pre wash (45 °C) → Main wash (68 °C) → Rinse → Hot Rinse (68 °C) → Dry → End	Main wash (60 °C) → Rinse → Hot Rinse (53 °C) → Dry → End
Water consumption (L)	11.3	7.4	13.9	9.4
Energy consumption (kWh)	1.10	1.02	1.53	0.71
Cycle time (min.)	92	91	146	37

Untitled-2 88 2026-05-26 5:40:10

DW90H79*A** models

Cycle	AI AI	ECO
Cycle sequence	Pre wash (40 °C) → Main wash (52-58 °C) → Rinse → Hot Rinse (53-58 °C) → Dry → End	Main wash (43 °C) → Rinse → Hot Rinse (38 °C) → Dry → End
Water consumption (L)	9.3-18.2	9.4
Energy consumption (kWh)	0.80-1.30	0.542
Cycle time (min.)	97-150	314

Cycle	Intensive	Delicate	Express
Cycle sequence	Pre wash (45 °C) → Main wash (65 °C) → Rinse → Hot Rinse (63 °C) → Dry → End	Pre wash (40 °C) → Main wash (50 °C) → Rinse → Hot Rinse (50 °C) → Dry → End	Main wash (60 °C) → Rinse (46 °C)→ Hot Rinse (60 °C) → Dry → End
Water consumption (L)	16	12.0	9.8
Energy consumption (kWh)	1.45	0.80	1.08
Cycle time (min.)	180	111	92

Cycle	Pre Wash	Machine Care	Extra Silence
Cycle sequence	Pre wash → End	Pre wash → Main wash (70 °C) → Rinse → Hot Rinse (70 °C) → Dry → End	Pre wash → Main wash (60 °C) → Rinse → Hot Rinse (55 °C) → Dry → End
Water consumption (L)	6.6	12.9	13.6
Energy consumption (kWh)	0.01	1.40	1.08
Cycle time (min.)	15	136	257

Cycle	Downloaded cycle			
	Plastic	Baby Care	Pots and Pans	Drinkware
Cycle sequence	Main wash (60 °C) → Rinse → Hot Rinse (60 °C) → Dry → End	Pre wash → Hot Rinse (75 °C) → Dry → End	Pre wash (45 °C) → Main wash (68 °C) → Rinse → Hot Rinse (68 °C) → Dry → End	Main wash (60 °C) → Rinse → Hot Rinse (53 °C) → Dry → End
Water consumption (L)	12.9	7.4	15.5	9.4
Energy consumption (kWh)	1.10	1.02	1.53	0.71
Cycle time (min.)	91	91	145	37

Untitled-2 89 2026-05-26 5:40:10

Appendix

DW80H77*A**, DW80H73YA**, DW80H73WA** models

Cycle	AI AI	ECO
Cycle sequence	Pre wash (40 °C) → Main wash (52-58 °C) → Rinse → Hot Rinse (53-58 °C) → Dry → End	Main wash (43 °C) → Rinse → Hot Rinse (38 °C) → Dry → End
Water consumption (L)	9.2-18.0	9.4
Energy consumption (kWh)	0.80-1.30	0.542
Cycle time (min.)	94-142	314

Cycle	Intensive	Delicate	Express
Cycle sequence	Pre wash (45 °C) → Main wash (65 °C) → Rinse → Hot Rinse (63 °C) → Dry → End	Pre wash (40 °C) → Main wash (50 °C) → Rinse → Hot Rinse (50 °C) → Dry → End	Main wash (60 °C) → Rinse (46 °C)→ Hot Rinse (60 °C) → Dry → End
Water consumption (L)	15.8	12.0	9.8
Energy consumption (kWh)	1.45	0.80	1.08
Cycle time (min.)	174	111	89

Cycle	Pre Wash	Machine Care	Extra Silence
Cycle sequence	Pre wash → End	Pre wash → Main wash (70 °C) → Rinse → Hot Rinse (70 °C) → Dry → End	Pre wash → Main wash (60 °C) → Rinse → Hot Rinse (55 °C) → Dry → End
Water consumption (L)	6.6	12.9	13.6
Energy consumption (kWh)	0.01	1.40	1.08
Cycle time (min.)	15	136	257

Cycle	Downloaded cycle			
	Plastic	Baby Care	Pots and Pans	Drinkware
Cycle sequence	Main wash (60 °C) → Rinse → Hot Rinse (60 °C) → Dry → End	Pre wash → Hot Rinse (75 °C) → Dry → End	Pre wash (45 °C) → Main wash (68 °C) → Rinse → Hot Rinse (68 °C) → Dry → End	Main wash (60 °C) → Rinse → Hot Rinse (53 °C) → Dry → End
Water consumption (L)	12.9	7.4	15.5	9.4
Energy consumption (kWh)	1.10	1.02	1.53	0.71
Cycle time (min.)	91	91	145	37

Untitled-2 90 2026-05-26 5:40:10

DW80H73QA** models

Cycle	AI AI	ECO
Cycle sequence	Pre wash (40 °C) → Main wash (52-58 °C) → Rinse → Hot Rinse (53-58 °C) → Dry → End	Main wash (43 °C) → Rinse → Hot Rinse (38 °C) → Dry → End
Water consumption (L)	7.6-16.4	7.5
Energy consumption (kWh)	0.80-1.30	0.542
Cycle time (min.)	100-148	314

Cycle	Intensive	Delicate	Express
Cycle sequence	Pre wash (45 °C) → Main wash (65 °C) → Rinse → Hot Rinse (63 °C) → Dry → End	Pre wash (40 °C) → Main wash (50 °C) → Rinse → Hot Rinse (50 °C) → Dry → End	Main wash (60 °C) → Rinse (46 °C)→ Hot Rinse (60 °C) → Dry → End
Water consumption (L)	14.2	10.4	9.8
Energy consumption (kWh)	1.45	0.80	1.08
Cycle time (min.)	180	117	89

Cycle	Pre Wash	Machine Care	Extra Silence
Cycle sequence	Pre wash → End	Pre wash → Main wash (70 °C) → Rinse → Hot Rinse (70 °C) → Dry → End	Pre wash → Main wash (60 °C) → Rinse → Hot Rinse (55 °C) → Dry → End
Water consumption (L)	6.6	12.9	12.0
Energy consumption (kWh)	0.01	1.40	1.08
Cycle time (min.)	15	136	263

Cycle	Downloaded cycle			
	Plastic	Baby Care	Pots and Pans	Drinkware
Cycle sequence	Main wash (60 °C) → Rinse → Hot Rinse (60 °C) → Dry → End	Pre wash → Hot Rinse (75 °C) → Dry → End	Pre wash (45 °C) → Main wash (68 °C) → Rinse → Hot Rinse (68 °C) → Dry → End	Main wash (60 °C) → Rinse → Hot Rinse (53 °C) → Dry → End
Water consumption (L)	11.3	7.4	13.9	9.4
Energy consumption (kWh)	1.10	1.02	1.53	0.71
Cycle time (min.)	97	91	151	37

Untitled-2 91 2026-05-26 5:40:10

Appendix

DW80H7*WB**, DW80H7*YB**, DW80H7*VB** models

Cycle	AI	ECO
Cycle sequence	Pre wash (40 °C) → Main wash (52-58 °C) → Rinse → Hot Rinse (53-58 °C) → Dry → End	Main wash (45 °C) → Rinse → Hot Rinse (43 °C) → Dry → End
Water consumption (L)	9.2-18.0	9.4
Energy consumption (kWh)	0.80-1.30	0.644 0.635 (DW80H72YB**)
Cycle time (min.)	94-142	279

Cycle	Intensive	Delicate	Express
Cycle sequence	Pre wash (45 °C) → Main wash (65 °C) → Rinse → Hot Rinse (63 °C) → Dry → End	Pre wash (40 °C) → Main wash (50 °C) → Rinse → Hot Rinse (50 °C) → Dry → End	Main wash (60 °C) → Rinse (46 °C)→ Hot Rinse (60 °C) → Dry → End
Water consumption (L)	15.8	12.0	9.8
Energy consumption (kWh)	1.45	0.80	1.08
Cycle time (min.)	174	111	89

Cycle	Pre Wash	Machine Care	Extra Silence
Cycle sequence	Pre wash → End	Pre wash → Main wash (70 °C) → Rinse → Hot Rinse (70 °C) → Dry → End	Pre wash → Main wash (60 °C) → Rinse → Hot Rinse (55 °C) → Dry → End
Water consumption (L)	6.6	12.9	13.6
Energy consumption (kWh)	0.01	1.40	1.08
Cycle time (min.)	15	136	257

Cycle	Downloaded cycle			
	Plastic	Baby Care	Pots and Pans	Drinkware
Cycle sequence	Main wash (60 °C) → Rinse → Hot Rinse (60 °C) → Dry → End	Pre wash → Hot Rinse (75 °C) → Dry → End	Pre wash (45 °C) → Main wash (68 °C) → Rinse → Hot Rinse (68 °C) → Dry → End	Main wash (60 °C) → Rinse → Hot Rinse (53 °C) → Dry → End
Water consumption (L)	12.9	7.4	15.5	9.4
Energy consumption (kWh)	1.10	1.02	1.53	0.71
Cycle time (min.)	91	91	145	37

Untitled-2 92 2026-05-26 5:40:10

DW80H73QB** models

Cycle	AI AI	ECO
Cycle sequence	Pre wash (40 °C) → Main wash (52-58 °C) → Rinse → Hot Rinse (53-58 °C) → Dry → End	Main wash (45 °C) → Rinse → Hot Rinse (43 °C) → Dry → End
Water consumption (L)	7.5-16.4	7.9
Energy consumption (kWh)	0.80-1.30	0.644
Cycle time (min.)	100-148	279

Cycle	Intensive	Delicate	Express
Cycle sequence	Pre wash (45 °C) → Main wash (65 °C) → Rinse → Hot Rinse (63 °C) → Dry → End	Pre wash (40 °C) → Main wash (50 °C) → Rinse → Hot Rinse (50 °C) → Dry → End	Main wash (60 °C) → Rinse (46 °C)→ Hot Rinse (60 °C) → Dry → End
Water consumption (L)	14.2	10.4	9.8
Energy consumption (kWh)	1.45	0.80	1.08
Cycle time (min.)	180	117	89

Cycle	Pre Wash	Machine Care	Extra Silence
Cycle sequence	Pre wash → End	Pre wash → Main wash (70 °C) → Rinse → Hot Rinse (70 °C) → Dry → End	Pre wash → Main wash (60 °C) → Rinse → Hot Rinse (55 °C) → Dry → End
Water consumption (L)	6.6	12.9	12.0
Energy consumption (kWh)	0.01	1.40	1.08
Cycle time (min.)	15	136	263

Cycle	Downloaded cycle			
	Plastic	Baby Care	Pots and Pans	Drinkware
Cycle sequence	Main wash (60 °C) → Rinse → Hot Rinse (60 °C) → Dry → End	Pre wash → Hot Rinse (75 °C) → Dry → End	Pre wash (45 °C) → Main wash (68 °C) → Rinse → Hot Rinse (68 °C) → Dry → End	Main wash (60 °C) → Rinse → Hot Rinse (53 °C) → Dry → End
Water consumption (L)	11.3	7.4	13.9	9.4
Energy consumption (kWh)	1.10	1.02	1.53	0.71
Cycle time (min.)	97	91	151	37

NOTE

- The cycle time depends on the options you have added, and the pressure and temperature of the supplied water.
- The dishwasher drains the remaining water inside automatically if it has not been used for the last 5 days.
- The power consumption depends on the water temperature or load.
- Energy values for cycles were calculated under standardised testing conditions.

Untitled-2 93 2026-05-26 5:40:11

Appendix

Transportation/relocation

Make sure the dishwasher is empty with no loose parts. First, drain the dishwasher as follows.

1. Open the door, and then turn the dishwasher on.
2. Select the **ECO** cycle.
3. Tap **Start** ▷, and then close the door.
4. When the cycle is finished, open the door after 5 seconds.
5. Touch and hold **Start** ▷ for 3 seconds to drain water.
6. Close the door.
7. When the draining process is complete, open the door.
8. Turn the dishwasher off, and then shut the water valve off.
9. Disconnect both the water hose and the drain hose.

⚠ CAUTION

Do not shake or sway the dishwasher while moving it. Residual water may drip from the dishwasher.

Protection against frost

If you leave the dishwasher in a place with a risk of frost for an extended time, make sure to empty the dishwasher. For details, see the "**Transportation/relocation**" section.

Disposing the dishwasher and helping the environment

Your dishwasher is manufactured from recyclable materials. If you decide to dispose of it, please observe your local waste disposal regulations. Cut off the power cord so that the appliance cannot be connected to a power source.

Remove the door so that animals and children cannot get trapped inside the appliance.

Untitled-2 94 2026-05-26 5:40:11

Energy, water saving tip

- The ECO cycle is suitable to clean normally soiled tableware, that for this use, it is the most efficient cycle in terms of its combined energy and water consumption, and that it is used to assess compliance with the EU ecodesign legislation (COMMISSION REGULATION (EU) 2019/2022).
- Manual pre-rinsing of tableware items leads to increased water and energy consumption and is not recommended. Use a knife, etc. to remove only large bits of food before loading.
- Water supplied can be up to 60 °C, and less power is consumed when hot water is connected.
- It's better to fill the racks if possible but without overloading.
- Load the tableware to the racks properly to prevent damage and poor performance.
  - Overloading and overlapping tableware may reduce the cleaning and drying performance.
- Load your tableware as recommended.
  - Load the tableware with the concave bottom at an angle so that water can run off.
  - Arrange the tableware so they do not interfere with the spray arms and the detergent dispenser.
- It can make the cleaning and drying performance better, and prevent the noise of spray arms bumping the tableware.
  - To prevent injury from the knives and other utensils with sharp points, it must be loaded in the basket with their points down or placed in a horizontal position.
- To save water and energy, use the ECO cycle. it is the most efficient program when washing normally soiled items.
- Use an appropriate amount of detergent and rinse according to the manufacturer's guidelines.
- Dishwasher use saves water compared to ordinary washing by hand.
- Ecodesign information can be found by going to www.samsung.com/support.

EPREL information

To access energy labelling information about this product on the European Product Registry for Energy Labelling (EPREL), go to https://eprel.ec.europa.eu/qr/****** where ****** is the product's EPREL registration number. You can find the registration number on the rating label of your product.

Untitled-2 95 2026-05-26 5:40:11

Appendix

Specifications

Model		DW90H****B* / DW80H****B*
Type		Fully Built-in
Power supply		220-240 V~, 50Hz
Water pressure		0.05-0.8 MPa
Wash capacity	DW90H79**** DW80H77**** DW80H73****	14 place settings
	DW80H72****	13 place settings
Power consumption (Rated)		2000-2300 W
Dimension (Width x Depth x Height)		595 x 555 x 815 mm
Weight (Unpacked)		45.0 kg (DW80H77H3B0 / DW90H79H1B0) 42.5 kg (DW90H79NAB0 / DW80H77VAB0 / DW80H77NAB0) 41.0 kg (DW80H73WBB0 / DW80H73WAB0 / DW80H73VBB0 / DW80H73VBB0) 41.0 kg (DW80H73QBB0) 39.0 kg (DW80H72YBB0)
Weight (Packed)		48.5 kg (DW80H77H3B0 / DW90H79H1B0) 47.0 kg (DW90H79NAB0 / DW80H77VAB0 / DW80H77NAB0) 44.5 kg (DW80H73WBB0 / DW80H73WAB0 / DW80H73VBB0 / DW80H73VBB0) 45.0 kg (DW80H73QBB0) 43.0 kg (DW80H72YBB0)

Untitled-2 96 2026-05-26 5:40:11

Model		DW90H****I* / DW80H****I*
Type		Fully Built-in (Sliding)
Power supply		220-240 V~, 50Hz
Water pressure		0.05-0.8 MPa
Wash capacity	DW90H79**** DW80H77**** DW80H73****	14 place settings
	DW80H72****	13 place settings
Power consumption (Rated)		2000-2300 W
Dimension (Width x Depth x Height)		595 x 555 x 815 mm
Weight (Unpacked)		44.5 kg (DW90H79G1I0 / DW90H79G1I0) 42.5 kg (DW90H79JAI0 / DW80H77JAI0 / DW80H77WAI0 / DW80H77JAI0) 42.5 kg (DW80H73WBI0) 44.5 kg (DW80H73QBI0 / DW80H73QAI0)
Weight (Packed)		48.5 kg (DW90H79G1I0 / DW90H79G1I0) 47.5 kg (DW90H79JAI0 / DW80H77JAI0 / DW80H77WAI0 / DW80H77JAI0) 46.0 kg (DW80H73WBI0) 47.5 kg (DW80H73QBI0 / DW80H73QAI0)

Untitled-2 97 2026-05-26 5:40:11

Appendix

Model		DW80H****U*	DW80H****S*
Type		Built-under	Semi Built-in
Power supply		220-240 V~, 50Hz	
Water pressure		0.05-0.8 MPa	
Wash capacity	DW90H79**** DW80H77**** DW80H73****	14 place settings	
	DW80H72****	13 place settings	
Power consumption (Rated)		2000-2300 W	
Dimension (Width x Depth x Height)		595 x 575 x 815 mm	
Weight (Unpacked)		45.5 kg (DW80H77U3UF) 42.5 kg (DW80H73YAUF / DW80H73YBUF) 43.5 kg (DW80H77S3SF) 40.5 kg (DW80H73WASF / DW80H73WBSF)	
Weight (Packed)		49.0 kg (DW80H77U3UF) 46.0 kg (DW80H73YAUF / DW80H73YBUF) 49.0 kg (DW80H77S3SF) 45.0 kg (DW80H73WASF / DW80H73WBSF)	

Model		DW80H****F*
Type		Free Standing
Power supply		220-240 V~, 50Hz
Water pressure		0.05-0.8 MPa
Wash capacity	DW90H79**** DW80H77**** DW80H73****	14 place settings
	DW80H72****	13 place settings
Power consumption (Rated)		2000-2300 W
Dimension (Width x Depth x Height)		598 x 600 x 845 mm
Weight (Unpacked)		53.0 kg (DW80H77YBFF) 52.0 kg (DW80H73YAFF / DW80H73YBFF / DW80H73YBFZ)
Weight (Packed)		56.5 kg (DW80H77YBFF) 55.5 kg (DW80H73YAFF / DW80H73YBFF / DW80H73YBFZ)

Untitled-2 98 2026-05-26 5:40:11

For standard test

NOTE

The information for comparability test as follows.

DW90H79**** Series

- Washing capacity: 14 place settings
- Test standard: EN 60436
- Position of upper rack: lower position
- Position of cutlery rack : lower position (Applicable models only)
- Wash cycle: ECO
- Additional options: None
- Dose per wash setting: F6
- Water hardness level setting: L2
- Dosage of the standard detergent: main-wash 22 g
- For the arrangement of the items, refer to the below figures

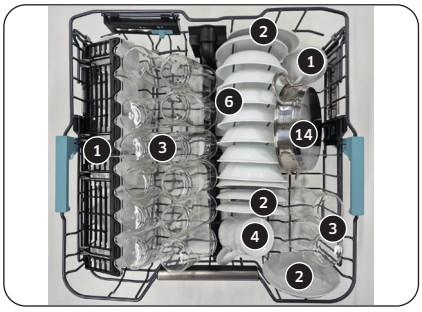

Upper rack



Lower rack



1. Cups
2. Saucers



3. Glasses



4. Mug cups



5. Glass bowls



6. Dessert bowls



7. Dessert plates



8. Dinner plates



9. Soup plates



10. Oval platter



11. Melamine dessert



12. Melamine bowl



13. Small pot



14. Oven pot

Untitled-2 99 2026-05-26 5:40:15

For standard test



Cutlery rack



15. Soup spoons



16. Forks



17. Knives



18. Tea spoons



19. Dessert spoons



20. Serving spoons



21. Serving forks



22. Gravy ladles

Untitled-2 100 2026-05-26 5:40:18

DW80H77**** Series

- Washing capacity: 14 place settings
- Test standard: EN 60436
- Position of upper rack: lower position
- Position of cutlery rack : lower position (Applicable models only)
- Wash cycle: ECO
- Additional options: None
- Dose per wash setting: F6
- Water hardness level setting: L2
- Dosage of the standard detergent: main-wash 22 g
- For the arrangement of the items, refer to the below figures

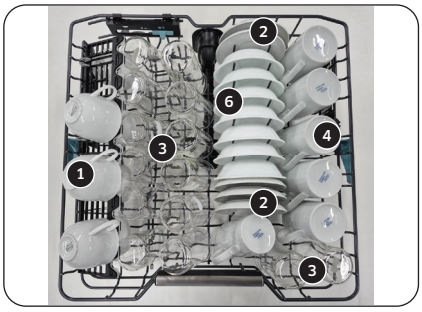

Upper rack

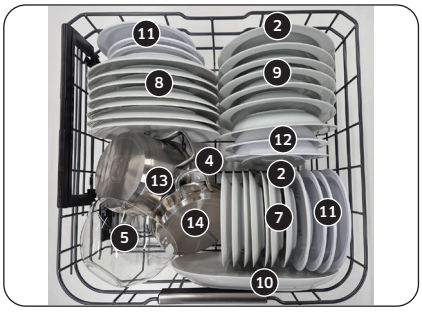

Lower rack



1. Cups
2. Saucers



3. Glasses



4. Mug cups



5. Glass bowls



6. Dessert bowls



7. Dessert plates



8. Dinner plates



9. Soup plates



10. Oval platter



11. Melamine dessert



12. Melamine bowl



13. Small pot



14. Oven pot

Untitled-2 101 2026-05-26 5:40:19

For standard test

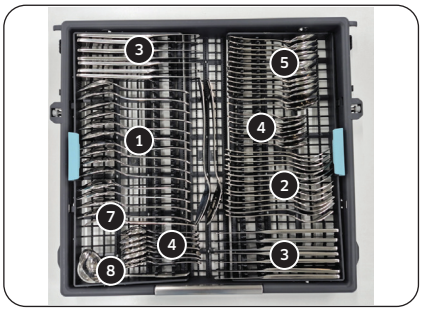

Cutlery rack



1. Soup spoons



2. Forks



3. Knives



4. Tea spoons



5. Dessert spoons



6. Serving spoons



7. Serving forks



8. Gravy ladles

Untitled-2 102 2026-05-26 5:40:19

DW80H73**** Series

- Washing capacity: 14 place settings
- Test standard: EN 60436
- Position of upper rack: lower position
- Position of cutlery rack : lower position (Applicable models only)
- Wash cycle: ECO
- Additional options: None
- Dose per wash setting: F6
- Water hardness level setting: L2
- Dosage of the standard detergent: main-wash 22 g
- For the arrangement of the items, refer to the below figures

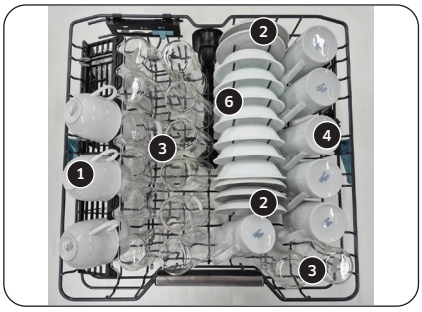

Upper rack

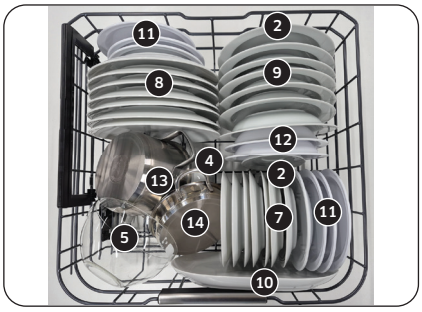

Lower rack



1. Cups
2. Saucers



3. Glasses



4. Mug cups



5. Glass bowls



6. Dessert bowls



7. Dessert plates



8. Dinner plates



9. Soup plates



10. Oval platter



11. Melamine dessert



12. Melamine bowl



13. Small pot



14. Oven pot

Untitled-2 103 2026-05-26 5:40:20

For standard test

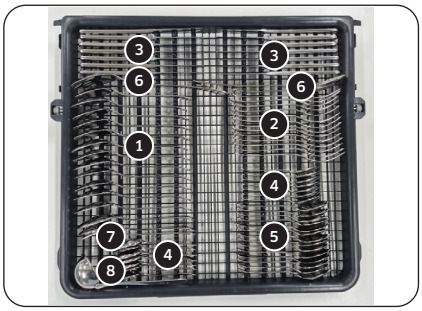

Cutlery rack



1. Soup spoons



2. Forks



3. Knives



4. Tea spoons



5. Dessert spoons



6. Serving spoons



7. Serving forks



8. Gravy ladles

Untitled-2 104 2026-05-26 5:40:20

DW80H72**** Series

- Washing capacity: 13 place settings
- Test standard: EN 60436
- Position of upper rack: upper position
- Wash cycle: ECO
- Additional options: None
- Dose per wash setting: F6
- Water hardness level setting: L2
- Dosage of the standard detergent: main-wash 21 g
- For the arrangement of the items, refer to the below figures

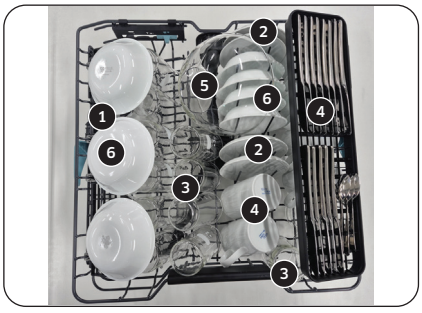

Upper rack

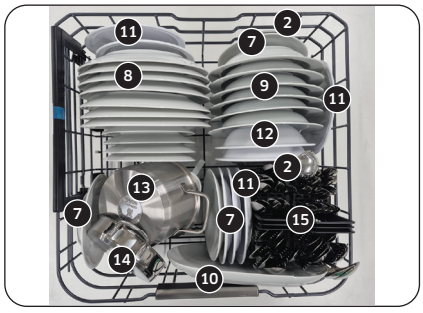

Lower rack



1. Cups
2. Saucers



3. Glasses



4. Mug cups



5. Glass bowls



6. Dessert bowls



7. Dessert plates



8. Dinner plates



9. Soup plates



10. Oval platter



11. Melamine dessert



12. Melamine bowl



13. Small pot



14. Oven pot



15. Cutlery basket

Untitled-2 105 2026-05-26 5:40:22

For standard test

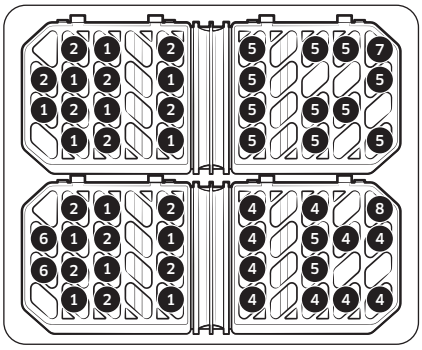

Cutlery basket

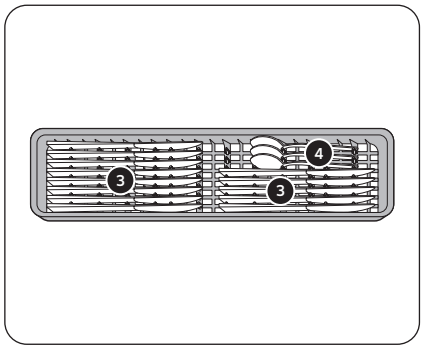

Cutlery rack



1. Soup spoons



2. Forks



3. Knives



4. Tea spoons



5. Dessert spoons



6. Serving spoons



7. Serving forks



8. Gravy ladles

Untitled-2 106 2026-05-26 5:40:22

Contact information

QUESTIONS OR COMMENTS?

COUNTRY	CALL	OR VISIT US ONLINE AT
AUSTRIA	0800 72 67 864 (0800-SAMSUNG)	www.samsung.com/support
BELGIUM	+32 26200210	
DENMARK	70 70 19 70	
FINLAND	OLD 030-622 75 15, NEW number: 0800 528 475	
FRANCE	01 48 63 00 00	
GERMANY	06196 77 555 77	
ITALIA	800-SAMSUNG (800.7267864)	
GREECE	80111-SAMSUNG (80111 726 7864) from mobile and land line (+30) 210 6897691 from mobile and land line	
LUXEMBURG	+352 2610 37 10	
NETHERLANDS	+31 88 909 0111	
NORWAY	21 62 90 99	
PORTUGAL	210 608 098 Chamada para a rede fixa nacional Dias úteis das 9h às 20h	
SPAIN	91 175 00 15	
SWEDEN	0771-400 300	
SWITZERLAND	0800 726 786	
UK	0333 000 0333	
IRELAND (EIRE)	0818 717100	
LITHUANIA	0-800-77777	
LATVIA	8000-7267	
ESTONIA	800-7267	
CZECH	800726786 	

Untitled-2 107 2026-05-26 5:40:23

Contact information

COUNTRY	CALL	OR VISIT US ONLINE AT
SLOVAKIA	0800726786	www.samsung.com/support
POLAND	801-172-678* * (opłata według taryfy operatora)	
BULGARIA	0800 111 31 - Безплатен за всички оператори *3000 - Цена на един градски разговор или според тарифата на мобилният оператор 09:00 до 18:00 - Понеделник до Петък	
ROMANIA	0800872678 - Apel gratuit *8000 - Apel tarifat în reţea Program Call Center Luni - Vineri: 9 AM - 6 PM	
HUNGARY	061 42 92 312	
UKRAINE	0-800-502-000	
MOLDOVA	+373-22-667-400	

Untitled-2 108 2026-05-26 5:40:24

Memo

Memo

Memo

SAMSUNG