Lenovo

Lenovo Tab P11 Plus

Safety, Warranty & Quick Start Guide

Lenovo TB-J616F
Lenovo TB-J616X

https://support.lenovo.com
https://forums.lenovo.com
Read this guide carefully before using your device.
All information labeled with * in this guide only refers to the WLAN + LTE model.

Reading before using your device

Reading first - regulatory information

Device models equipped with wireless communications comply with the radio frequency and safety standards of any country or region in which it has been approved for wireless use. In addition, if your product contains a telecom modem, it complies with the requirements for connection to the telephone network in your country.

Be sure to read the *Regulatory Notice* for your country or region before using the wireless devices contained in your device. To obtain a PDF version of the *Regulatory Notice*, go to https://support.lenovo.com.

Getting support

To get support on network services and billing, contact your wireless network operator. To learn how to use your device and view its technical specifications, go to https://support.lenovo.com.

Accessing your *User Guide*

Your *User Guide* contains detailed information about your device. To download the publications for your device, go to https://support.lenovo.com and follow the instructions on the screen.

Legal notices

Lenovo and the Lenovo logo are trademarks of Lenovo in the United States, other countries, or both.
Other company, product, or service names may be trademarks or service marks of others.
Dolby, Dolby Atmos, and the double-D symbol are registered trademarks of Dolby Laboratories Licensing Corporation. Manufactured under license from Dolby Laboratories. Confidential unpublished works. Copyright © 2012–2021 Dolby Laboratories. All rights reserved.
LIMITED AND RESTRICTED RIGHTS NOTICE: If data or software is delivered pursuant a General Services Administration “GSA” contract, use, reproduction, or disclosure is subject to restrictions set forth in Contract No. GS-35F-05925.

Device overview

Model	Version
Lenovo TB-J616F	WLAN
Lenovo TB-J616X	WLAN + LTE

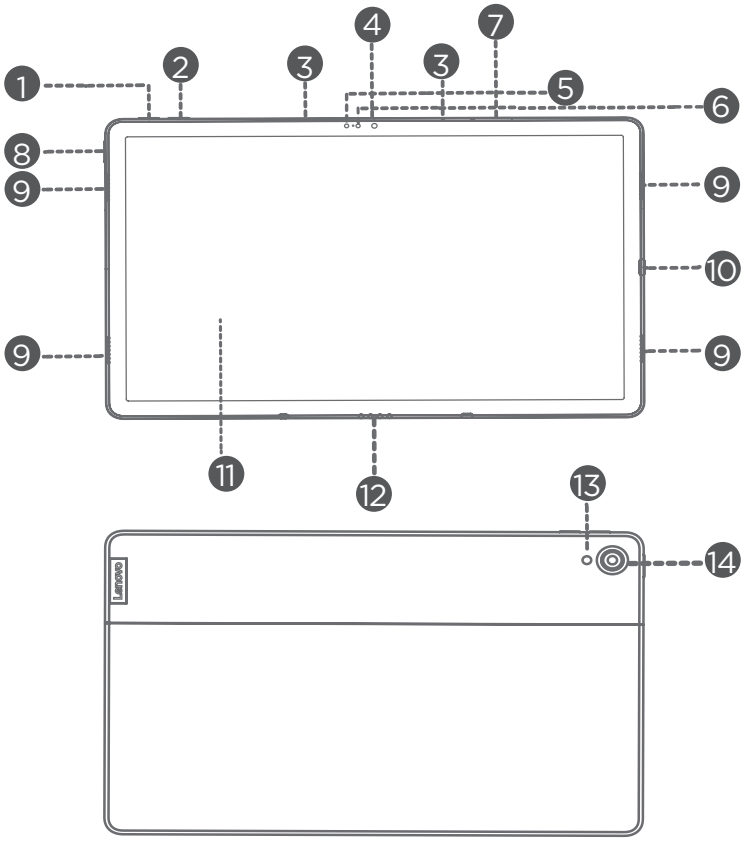

1. Volume up button
2. Volume down button
3. Microphone
4. Front-facing camera
5. Light sensor
6. ToF sensor
7. Card tray
8. Power button
9. Speakers
10. USB-C connector
11. Touch screen
12. 4-point pogo-pin smart connector (for the compatible keyboard and Smart Charging Station)
13. Flashlight
14. Rear camera

- The WLAN version does not have a Nano-SIM card slot.
- All pictures and illustrations in this document are for your reference only and may differ from the final product.

Preparing your device

Installing cards

Install the cards as shown in the figure.

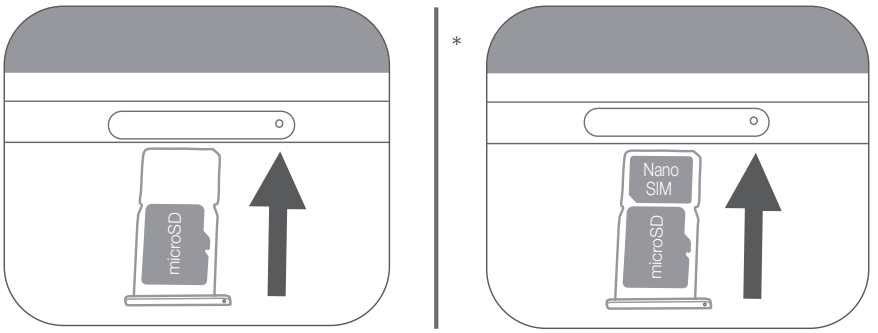

WLAN WLAN+LTE

- Power off the device before inserting or removing a card.
- Note that the WLAN version does not have a Nano-SIM card slot.

Charging your device

Connect your device to a power outlet using the USB cable and power adapter provided.

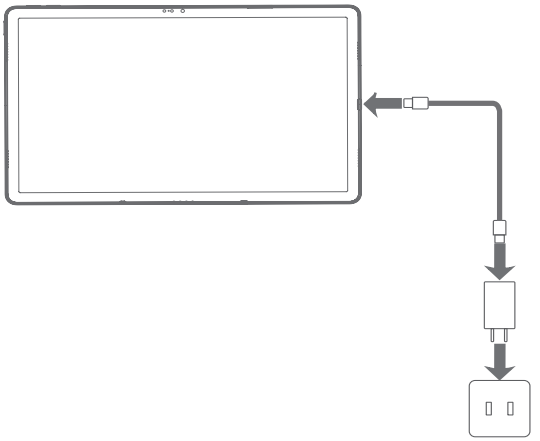

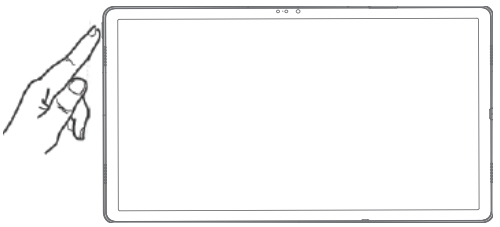

Turning on

Press and hold the Power button until the Lenovo logo appears.

Accessories (optional)

The accessories do not come with all models, and are sold separately.

Keyboard pack

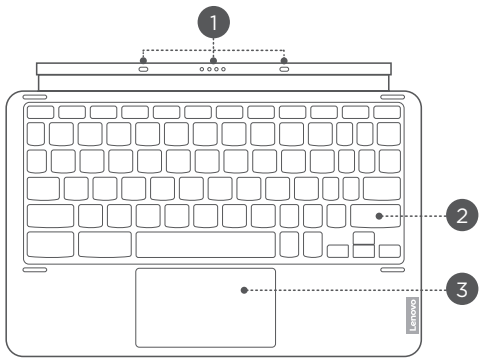

Keyboard



Stand Cover

1 Keyboard connector 2 Keyboard 3 Trackpad

4 Hinge 5 Kickstand

Keyboard layouts vary from country to country. The Keyboard layout in this document is for reference only and your Keyboard may differ.

Attaching the Keyboard pack

Attach the stand cover and keyboard to the tablet as shown in the following figure.

1

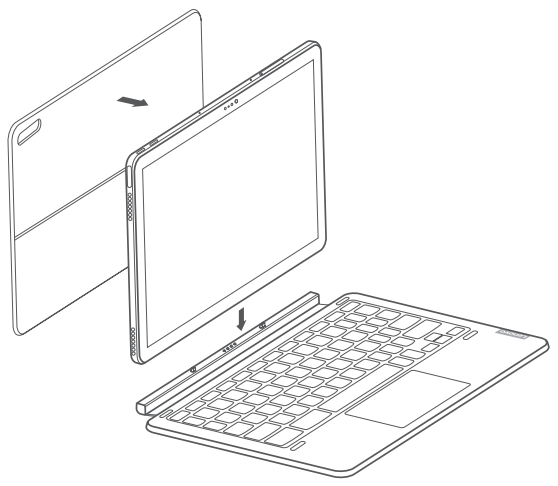

2

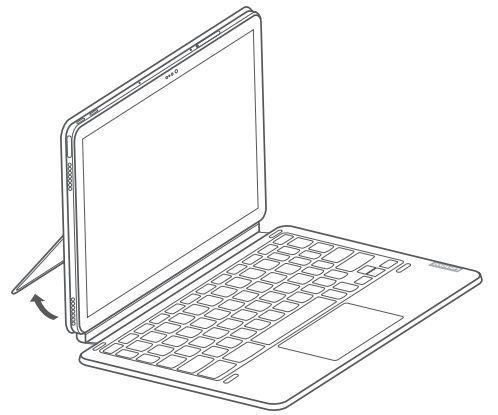

When you are attaching the Stand Cover to the Tablet, make sure that the camera hole is aligned with the tablet's rear camera.

Keyboard pack configurations

The Tablet can be used with the entire Keyboard pack attached, or with the Stand Cover alone.

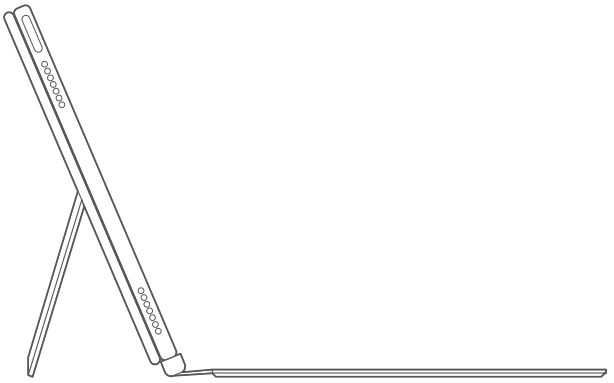

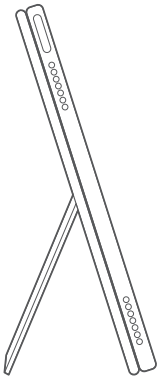

Opening and adjusting the Kickstand

You can adjust the Tablet angle using the Stand Cover. Grasp either side of the kickstand and gently open it until you reach the desired angle.

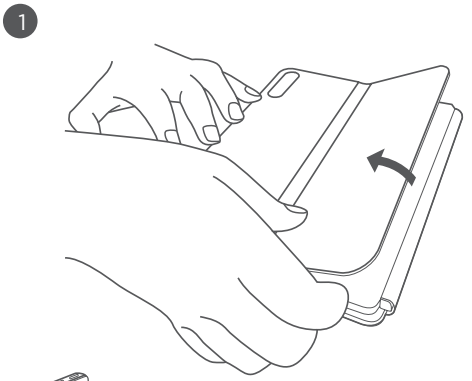

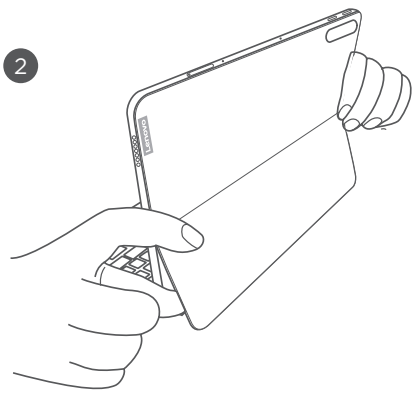

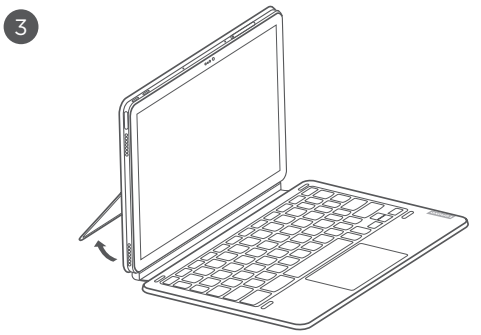

To prevent damage, do not apply excessive pressure to the Stand Cover or force the Kickstand beyond its natural range of motion.

1. Do not overtilt or apply excessive pressure to the Stand Cover, doing so may damage the hinges.
2. Adjust the tablet angle by opening the Kickstand and changing the position of the tablet until the desired angle is found.
3. The Tablet, Keyboard, and Stand Cover all contain magnetic materials. To avoid loss of magnetism, avoid exposing the Tablet, Keyboard, and Stand Cover to high temperatures or direct sunlight.
4. To prevent demagnetization of credit cards and other items with magnetic data, keep them away from the Tablet, Keyboard, and Stand Cover.

Lenovo Precision Pen 2

You can use Lenovo Precision Pen 2 in place of your fingers for a better the experience, such as working with specific applications to write or draw on the screen.

Overview

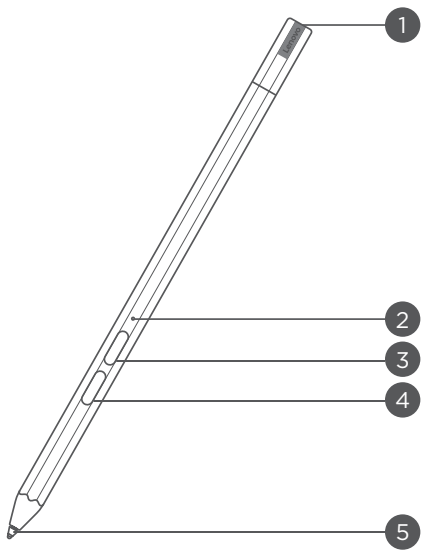

1. Pen cap
2. Indicator LED
3. Upper button
4. Lower button
5. Tip

Charging the pen

1. Remove the pen cap in the direction shown in the figure.
2. Connect the pen to a charger with a USB-C cable.
3. Replace the pen cap on the pen. You can start to use the pen after charging.

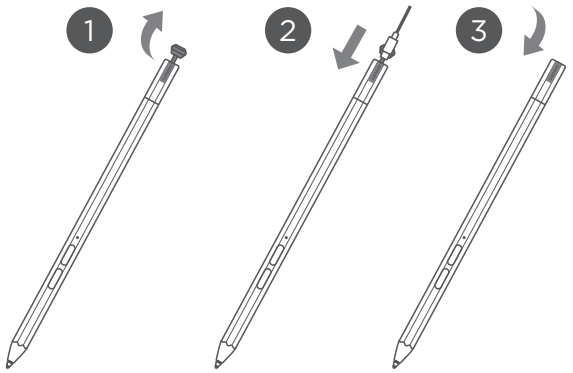

- The indicator light will have an amber glow while charging the pen and a white glow after it is fully charged.
- Please be cautious when using the pen. The pen contains sensitive electronic components. Dropping it may cause damage.

Replace tip

1. Pinch the tip with tweezers or another suitable tool.
2. Remove the tip.
3. Install the stand-by tip (supplied).



Store the Pen

Method one:

1. Slide the pen into the pen case.
2. Remove the transparent film on the back of the pen case.
3. Stick the pen case to the plastic panel.
4. Thread the ring through the X-shaped hole in the top of the plastic panel.

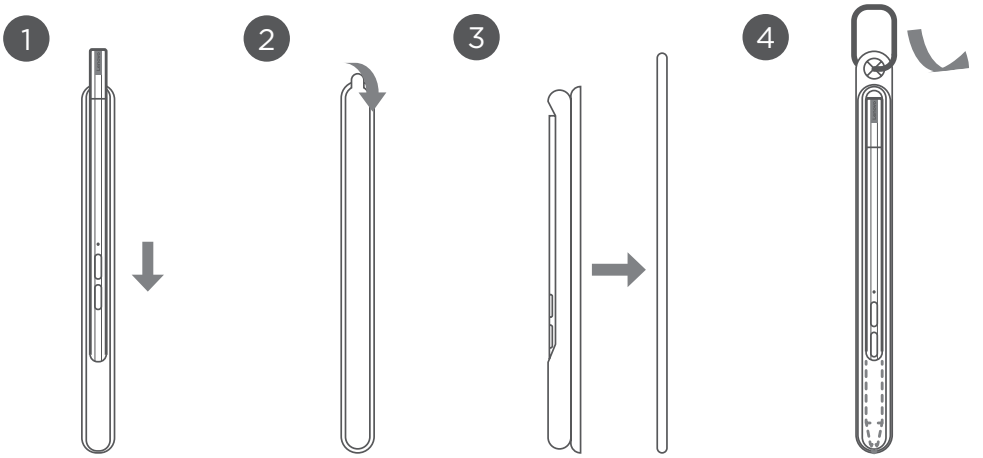

Method two:

1. Slide the pen into the pen case.
2. Remove the transparent film on the back of the pen case.
3. Stick the pen case to the back of the tablet or stand cover.

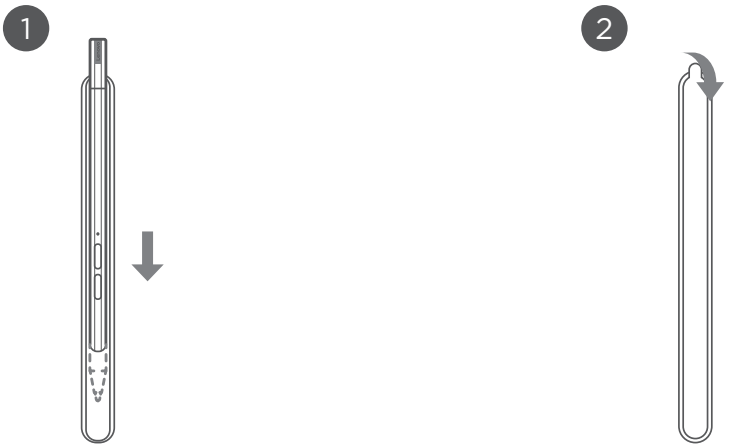

3

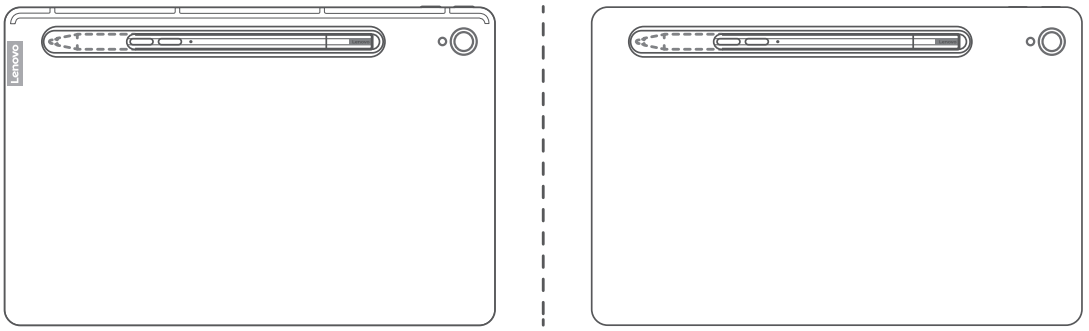

Use the Pen

1. Hold the pen close to the tablet until a white dot appears on the screen.
2. Use the upper and lower button functions of the pen.

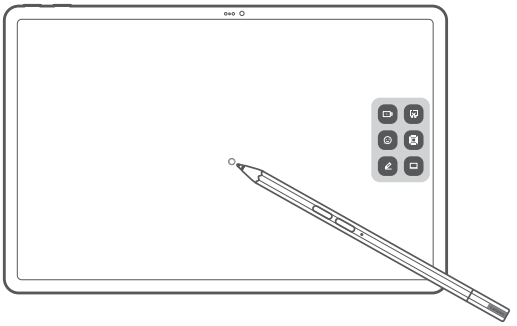

Using the pen on a coated screen may interfere with the pen-writing experience.

If your pen is not responsive, please try switching pen protocols. Hold both buttons consecutively for 25 seconds to switch between pen protocols (WGP& AES).

Smart Charging Station

Name	Model
Smart Charging Station	Lenovo CR-421

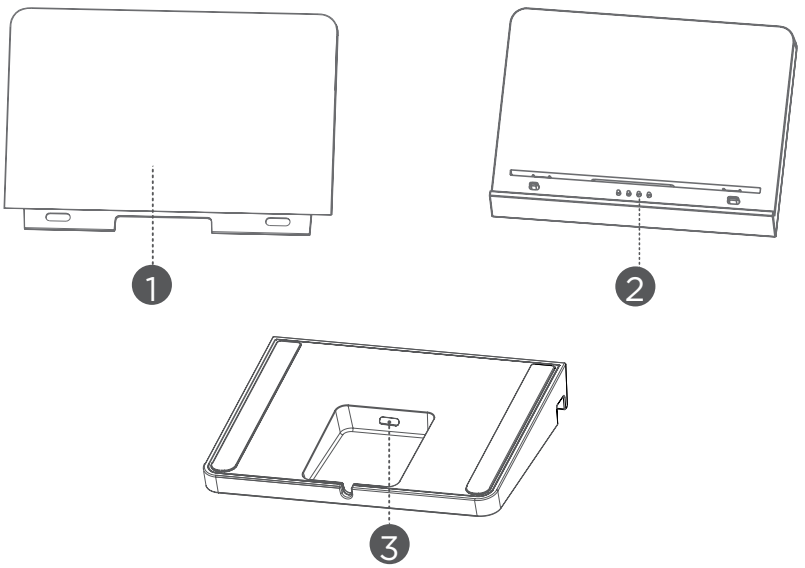

1 Removable back support

2 Smart connector

3 USB-C connector

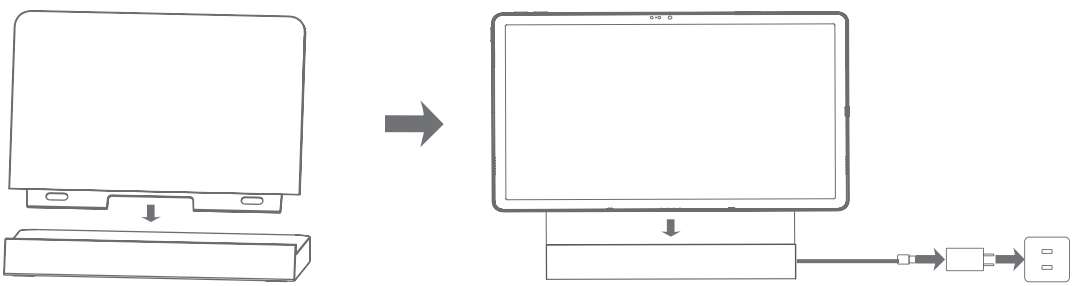

As shown in the picture, you can charge the battery through the Smart Charging Station.

- Frequent insertion and removal of back support may result in looseness.
- This product is designed to work only with bundled adaptor and charging cable, please use them in order to make the product work correctly.

Important safety and handling information

Plastic bag notice

Danger: Plastic bags can be dangerous. Keep plastic bags away from babies and children to avoid danger of suffocation.

Caution about high volume usage

Warning: Exposure to loud noise from any source for extended periods of time may affect your hearing. The louder the sound, the less time is required before your hearing could be affected. To protect your hearing:

- Limit the amount of time you use headsets or headphones at high volume.
- Avoid turning up the volume to block out noisy surroundings.
- Turn the volume down if you can't hear people speaking near you.

If you experience hearing discomfort, including the sensation of pressure or fullness in your ears, ringing in your ears or muffled speech, you should stop listening to the device through your headset or headphones and have your hearing checked.



To prevent possible hearing damage, do not listen at high volume levels for long periods.

Safety instructions for parents and adult supervisors

Your mobile device is not a toy. As with all electrical products, precautions should be observed during handling and using of electrical products to reduce the risk of electric shock. If parents choose to allow children to use the device, they should caution his or her child about the potential hazard while using and handling the mobile device.

Parents should inspect the mobile device (including the ac power adapter and the small part, as applicable) periodically for damage. Routinely check this mobile device to ensure that the device is working properly and is safe for children to use.

Internal rechargeable battery warning

Danger: Do not attempt to replace the internal rechargeable lithium ion battery. Replacing the original battery with an incompatible type may result in an increased risk of personal injury or property damage due to explosion, excessive heat, or other risks. Do not attempt to disassemble or modify the battery pack. Attempting to do so can cause a harmful explosion or battery fluid leakage.

When disposing of the battery, comply with all relevant local ordinances or regulations. Do not dispose the battery pack in municipal waste. Dispose used batteries according to the instructions.
The battery pack contains a small amount of harmful substances.
To avoid injury:

- Keep the battery pack away from open flames or other heat sources.
- Do not expose the battery pack to water, rain, or other corrosive liquids.
- Do not leave the battery in an environment with extremely high temperature.
- Avoid short-circuiting the battery pack.
- Keep the battery pack out of reach of small children and pets.
- Do not leave the battery in an environment with extremely low air pressure. It may result in an explosion or the leakage of flammable liquid or gas from the battery.

To extend battery life, we recommend charging the battery to at least 30% to 50% capacity each time, and recharging it every three months to prevent over discharge.

Eye Protection and Safety Information

While concentrating on the performance capabilities of its screens, Lenovo also places importance on user's eye health. This product has received TÜV Rheinland's "Low Blue Light" certification and can be used with confidence.

EurAsia compliance mark

EAC

Service and support information

Lenovo Limited Warranty notice

This product is covered by the terms of the Lenovo Limited Warranty (LLW), version L5050010-02 08/2011. Read the LLW at https://www.lenovo.com/warranty/llw_02. You can view the LLW in a number of languages from this website.

Warranty information

Lenovo provides a warranty period for your device. To check the warranty status of your device purchase upgrades, go to https://support.lenovo.com/warrantylookup, and then select the product and follow the on-screen instructions.

Get support

To download Lenovo service tool - LMSA:
https://support.lenovo.com/downloads/ds101291
Visit the website above for information on devices compatible with LMSA.

Visit Lenovo's support website (https://support.lenovo.com) with the device serial number to get more Lenovo support options, or scan the QR code, and then follow the on-screen instructions.

Environmental, recycling, and disposal information

General recycling statement

Lenovo encourages owners of information technology (IT) equipment to responsibly recycle their equipment when it is no longer needed. Lenovo offers a variety of programs and services to assist equipment owners in recycling their IT products. For information on recycling Lenovo products, go to http://www.lenovo.com/recycling.

Important Battery Recycling & WEEE information



Don't dispose of your product or battery with your household waste. Refer to the User Guide that came with your product for further information, or go to https://www.lenovo.com/recycling

Recycling information for Japan

Recycling and disposal information for Japan is available at: http://www.lenovo.com/recycling/japan

Additional recycling statements

Additional information about recycling device components and batteries is in your *User Guide*. See "**Accessing your User Guide**" for details.

Battery recycling marks

Battery recycling information for Taiwan



Battery recycling information for the United States and Canada



US & Canada Only

Restriction of Hazardous Substances Directive (RoHS)

Turkey

Lenovo products sold in Turkey, on or after June 1, 2009, meet the requirements of the former Republic of Turkey Restriction of Hazardous Substances legislation from 30th of May 2008 and the Control of Waste Electrical and Electronic Equipment Regulations from 22nd of May 2012(“Turkey RoHS”).

Ukraine

Lenovo products sold in Ukraine, on or after January 1, 2011, meet the requirements of the Technical Directive on Restriction of Hazardous Substances in Electric and Electronic Equipment enforced by the Government, Decision No 1057 dated 2008/12/03” (“Ukraine TR on RoHS”).

India

Lenovo products sold in India, on or after May 1, 2012, meet the requirements of the India E-waste (Management) Rules (“India RoHS”).

Vietnam

Lenovo products sold in Vietnam, on or after September 23, 2011, meet the requirements of the Vietnam Circular 30/2011/TT-BCT (“Vietnam RoHS”).

European Union (EU) / United Kingdom (UK) RoHS

This Lenovo product, with included parts (cables, cords, and so on) meets the requirements of EU Directive 2011/65/EU as amended by Directive 2015/863/EU and UK SI 2012 No. 3032 on the restriction of the use of certain hazardous substances in electrical and electronic equipment (“RoHS recast” or “RoHS 2”).
For more information about Lenovo progress on RoHS, go to:
https://www.lenovo.com/us/en/social_responsibility/RoHS-Communication.pdf

Singapore

Lenovo products sold in Singapore, on or after June 1, 2017, meet the requirements of Government Gazette order No. S 263/2016 Restriction of Hazardous Substances in Electrical and Electronic Equipment in Singapore (“SG-RoHS”).

European Union (EU) / United Kingdom (UK) compliance statement

Lenovo PC HK Limited declares that the radio equipment type: Lenovo TB-J616F is in compliance with the EU Radio Equipment Directive 2014/53/EU, as well as the UK Radio Equipment Regulations SI 2017 No. 1206. The full text of the system declarations of conformity are available at :
https://www.lenovo.com/us/en/compliance/eu-doc for EU and
https://www.lenovo.com/us/en/compliance/uk-doc for UK.
This radio equipment operates with the following frequency bands and maximum radio-frequency power:

Model Name	Frequency Bands	Maximum Power (dBm)
Lenovo TB-J616F	WLAN 2400-2483.5	<20
	WLAN 5150-5725	<20
	WLAN 5725-5850	<14
	Bluetooth 2400-2483.5	<10

Restrictions of use:

Usage of this device is limited to indoor in the band 5150 to 5350MHz.

	AT	BE	BG	CH	CY	CZ	DE	DK	EE	EL	ES	FI
	FR	HR	HU	IE	IS	IT	LI	LT	LU	LV	MT	NL
	NO	PL	PT	RO	SE	SI	SK	TR	**UK (NI)**		**UK**	

The above information is for EU countries and UK. Please refer to the actual product for supported frequency bands in other countries.

Specific Absorption Rate information

YOUR MOBILE DEVICE MEETS INTERNATIONAL GUIDELINES FOR EXPOSURE TO RADIO WAVES.

Your mobile device is a radio transmitter and receiver. It is designed not to exceed the limits for exposure to radio waves (radio frequency electromagnetic fields) recommended by international guidelines. The guidelines were developed by an independent scientific organization (ICNIRP) and include a substantial safety margin designed to assure the safety of all persons, regardless of age and health. The radio wave exposure guidelines use a unit of measurement known as the Specific Absorption Rate, or SAR.

Tests for SAR are conducted using standard operating positions with the device transmitting at its highest certified power level in all tested frequency bands. The highest SAR values under the ICNIRP guidelines for your device model are listed below:

Maximum SAR for this model and conditions under which it was recorded.				
EU/UK 10g SAR Limit (2.0 W/kg)	Lenovo TB-J616F	Body	WLAN, Bluetooth	1.484 W/kg
EU/UK 10g SAR Limit (4.0 W/kg)		Limb		1.484 W/kg

During use, the actual SAR values for your device are usually well below the values stated. This is because, for purposes of system efficiency and to minimize interference on the network, the operating power of your mobile device is automatically decreased when full power is not needed for the data connection. The lower the power output of the device, the lower its SAR value. If you are interested in further reducing your RF exposure then you can easily do so by limiting your usage or simply using a hands-free kit to keep the device away from the head and body.

© Copyright Lenovo 2021.

Reduce | Reuse | Recycle



V1.0_20210527

7011AA002236 MC

Printed in China