Lenovo 14e Chromebook Gen 2 and IdeaPad 3 Chrome 14APO6
Hardware Maintenance Manual



Note: Before using this information and the product it supports, be sure to read the general information under Appendix B “Notices” on page 55.

First Edition (May 2021)

© Copyright Lenovo 2021.

LIMITED AND RESTRICTED RIGHTS NOTICE: If data or software is delivered pursuant a General Services Administration “GSA” contract, use, reproduction, or disclosure is subject to restrictions set forth in Contract No. GS-35F-05925.

Contents

About this manual iii

Chapter 1. Safety information 1

General safety 1
Electrical safety 1
Safety inspection guide 3
Handling devices that are sensitive to electrostatic discharge 3
Grounding requirements 4
Safety notices (multilingual translations) 4

Chapter 2. General checkout 21

What to do first 21
Power system checkout 22
Checking the ac power adapter 22
Checking the built-in battery and operational charging 22

Chapter 3. Create and use a USB repair shim 25

What is a USB repair shim? 25
Create a USB repair shim 25
Use the USB repair shim 26

Chapter 4. Identifying FRUs (CRUs) 27

Locating FRUs and CRUs 27
Major FRUs and CRUs 28
LCD FRUs 30
Miscellaneous parts 31
Looking up FRU information 31

Chapter 5. Removing or replacing a FRU 33

General guidelines 33
Disabling the built-in battery 34
1010 Base cover assembly 34
1020 Built-in battery 35
1030 Wireless LAN card 36
1040 Speaker assembly 37
1050 Left I/O board, I/O bracket and I/O cables . . 37
1060 Right I/O bracket 39
1070 Clickpad and clickpad cable 39
1080 Wireless LAN antenna 40
1090 LCD unit 41
1110 System board 43
1120 Heatsink 44
1130 Keyboard assembly 44
Disassemble the LCD module 45
2010 LCD bezel 45
2020 LCD panel 45
2030 Camera privacy shutter and camera board 47
2040 LCD and camera cable 48
2050 LCD hinges 48
2060 LCD rear cover assembly 49

Appendix A. Controls, connectors, and indicators 51

Appendix B. Notices 55

© Copyright Lenovo 2021

About this manual

This manual contains service and reference information for the following Lenovo products:

Lenovo 14e Chromebook Gen 2	Machine type (MT) 82M1, 82M2
IdeaPad 3 Chrome 14APO6	Machine type (MT) 82MY

Use this manual along with the advanced diagnostic tests to troubleshoot problems.

Important:

- This manual is intended only for trained service technicians who are familiar with Lenovo products. Use this manual along with the advanced diagnostic tests to troubleshoot problems effectively.
- Depending on the model, some hardware configuration and software programs might not be available on the Chromebook™. Some statements in this manual might not be applicable to the Chromebook.
- Before servicing a Lenovo product, be sure to read all the information under Chapter 1 “Safety information” on page 1.

© Copyright Lenovo 2021

Chapter 1. Safety information

This chapter presents the following safety information that you need to be familiar with before you service a Chromebook.

- “General safety” on page 1
- “Electrical safety” on page 1
- “Safety inspection guide” on page 3
- “Handling devices that are sensitive to electrostatic discharge” on page 3
- “Grounding requirements” on page 4
- “Safety notices (multilingual translations)” on page 4

General safety

Follow these rules to ensure general safety:

- Observe good housekeeping in the area of the machines during and after maintenance.
- When lifting any heavy object:
  1. Ensure that you can stand safely without slipping.
  2. Distribute the weight of the object equally between your feet.
  3. Use a slow lifting force. Never move suddenly or twist when you attempt to lift.
  4. Lift by standing or by pushing up with your leg muscles; this action removes the strain from the muscles in your back. Do not attempt to lift any object that weighs more than 16 kg (35 lb) or that you think is too heavy for you.
- Do not perform any action that causes hazards to the customer, or that makes the equipment unsafe.
- Before you start the machine, ensure that other service technicians and the customer’s personnel are not in a hazardous position.
- Place removed covers and other parts in a safe place, away from all personnel, while you are servicing the machine.
- Keep your toolcase away from walk areas so that other people will not trip over it.
- Do not wear loose clothing that can be trapped in the moving parts of a machine. Ensure that your sleeves are fastened or rolled up above your elbows. If your hair is long, fasten it.
- Insert the ends of your necktie or scarf inside clothing or fasten it with a nonconductive clip, about 8 centimeters (3 inches) from the end.
- Do not wear jewelry, chains, metal-frame eyeglasses, or metal fasteners for your clothing, because metal objects are good electrical conductors.
- Wear safety glasses when you are hammering, drilling, soldering, cutting wire, attaching springs, using solvents, or working in any other conditions that might be hazardous to your eyes.
- After service, reinstall all safety shields, guards, labels, and ground wires. Replace any safety device that is worn or defective.
- Reinstall all covers correctly before returning the machine to the customer.
- Fan louvers on the machine help to prevent overheating of internal components. Do not obstruct fan louvers or cover them with labels or stickers.

Electrical safety

Observe the following rules when working on electrical equipment.

© Copyright Lenovo 2021

Important:

- Use only approved tools and test equipment. Some hand tools have handles covered with a soft material that does not insulate you when working with live electrical currents.
- Many customers have, near their equipment, rubber floor mats that contain small conductive fibers to decrease electrostatic discharges (ESD). Do not use this type of mat to protect yourself from electrical shock.
- Find the room emergency power-off (EPO) switch, disconnecting switch, or electrical outlet. If an electrical accident occurs, you can then operate the switch or unplug the power cord quickly.
- Do not work alone under hazardous conditions or near equipment that has hazardous voltages.
- Disconnect all power before:
  - Performing a mechanical inspection
  - Working near power supplies
  - Removing or installing main units
- Before you start to work on the machine, unplug the power cord. If you cannot unplug it, ask the customer to power off the wall box that supplies power to the machine, and to lock the wall box in the off position.
- If you need to work on a machine that has exposed electrical circuits, observe the following precautions:
  - Ensure that another person, familiar with the power-off controls, is near you. That person must be there to switch off the power, if necessary.
  - Use only one hand when working with powered-on electrical equipment; keep the other hand in your pocket or behind your back.

    CAUTION:
    An electrical shock can occur only when there is a complete circuit. By observing the above rule, you may prevent a current from passing through your body.
  - When using testers, set the controls correctly and use the approved probe leads and accessories for that tester.
  - Stand on suitable rubber mats (obtained locally, if necessary) to insulate you from grounds such as metal floor strips and machine frames.

  Observe the special safety precautions when you work with very high voltages. Instructions for these precautions are in the safety sections of maintenance information. Use extreme care when measuring high voltages.
- Regularly inspect and maintain your electrical hand tools for safe operational condition.
- Do not use worn or broken tools and testers.
- Never assume that power has been disconnected from a circuit. First, check that it has been powered off.
- Always look carefully for possible hazards in your work area. Examples of these hazards are moist floors, nongrounded power extension cables, power surges, and missing safety grounds.
- Do not touch live electrical circuits with the reflective surface of a plastic dental mirror. The surface is conductive; such touching can cause personal injury and machine damage.
- Do not service the following parts with the power on:
  - Power supply units
  - Pumps
  - Blowers and fans
  - Motor generators
  - Units similar to those listed above

  This practice ensures correct grounding of the units.
- If an electrical accident occurs:
  - Use caution; do not become a victim yourself.
  - Switch off power.
  - Send another person to get medical aid.

Safety inspection guide

The purpose of this inspection guide is to assist you in identifying potentially unsafe conditions. As each machine was designed and built, required safety items were installed to protect users and service technicians from injury. This guide addresses only those items. You should use good judgment to identify potential safety hazards due to attachment of non-Lenovo features or options not covered by this inspection guide.

If any unsafe conditions are present, you must determine how serious the apparent hazard could be and whether you can continue without first correcting the problem.

Consider these conditions and the safety hazards they present:

- Electrical hazards, especially primary power (primary voltage on the frame can cause serious or fatal electrical shock)
- Explosive hazards, such as a damaged CRT face or a bulging capacitor
- Mechanical hazards, such as loose or missing hardware

To determine whether there are any potentially unsafe conditions, use the following checklist at the beginning of every service task. Begin the checks with the power off, and the power cord disconnected.

Checklist:

1. Check exterior covers for damage (loose, broken, or sharp edges).
2. Turn off the computer. Disconnect the power cord.
3. Check the power cord for:
   a. A third-wire ground connector in good condition. Use a meter to measure third-wire ground continuity for 0.1 ohm or less between the external ground pin and the frame ground.
   b. The power cord should be the authorized type specified for your computer. Go to: https://support.lenovo.com/partslookup.
   c. Insulation must not be frayed or worn.
4. Check for cracked or bulging batteries.
5. Remove the cover.
6. Check for any obvious non-Lenovo alterations. Use good judgment as to the safety of any non-Lenovo alterations.
7. Check inside the unit for any obvious unsafe conditions, such as metal filings, contamination, water or other liquids, or signs of fire or smoke damage.
8. Check for worn, frayed, or pinched cables.
9. Check that the power-supply cover fasteners (screws or rivets) have not been removed or tampered with.

Handling devices that are sensitive to electrostatic discharge

Any computer part containing transistors or integrated circuits (ICs) should be considered sensitive to electrostatic discharge (ESD). ESD damage can occur when there is a difference in charge between objects. Protect against ESD damage by equalizing the charge so that the machine, the part, the work mat, and the person handling the part are all at the same charge.

Notes:

1. Use product-specific ESD procedures when they exceed the requirements noted here.

2. Ensure that the ESD protective devices you use have been certified (ISO 9000) as fully effective.

When handling ESD-sensitive parts:

- Keep the parts in protective packages until they are inserted into the product.
- Avoid contact with other people.
- Wear a grounded wrist strap against your skin to eliminate static on your body.
- Prevent the part from touching your clothing. Most clothing is insulative and retains a charge even when you are wearing a wrist strap.
- Use a grounded work mat to provide a static-free work surface. The mat is especially useful when handling ESD-sensitive devices.
- Select a grounding system, such as those listed below, to provide protection that meets the specific service requirement.

  Note: The use of a grounding system to guard against ESD damage is desirable but not necessary.

  – Attach the ESD ground clip to any frame ground, ground braid, or green-wire ground.
  – When working on a double-insulated or battery-operated system, use an ESD common ground or reference point. You can use coax or connector-outside shells on these systems.
  – Use the round ground prong of the ac plug on ac-operated computers.

Grounding requirements

Electrical grounding of the computer is required for operator safety and correct system function. Proper grounding of the electrical outlet can be verified by a certified electrician.

Safety notices (multilingual translations)

The safety notices in this section are provided in the following languages:
- English
- Arabic
- Brazilian Portuguese
- French
- German
- Hebrew
- Japanese
- Korean
- Spanish
- Traditional Chinese



DANGER

Before the computer is powered on after FRU replacement, make sure that all screws, springs, and other small parts are in place and are not left loose inside the computer. Verify this by shaking the computer and listening for rattling sounds. Metallic parts or metal flakes can cause electrical short circuits.



DANGER

Some standby batteries contain a small amount of nickel and cadmium. Do not disassemble a standby battery, recharge it, throw it into fire or water, or short-circuit it. Dispose of the battery as required by local ordinances or regulations. Use only the battery in the appropriate parts listing. Use of an incorrect battery can result in ignition or explosion of the battery.



DANGER

The battery pack contains small amounts of nickel. Do not disassemble it, throw it into fire or water, or short-circuit it. Dispose of the battery pack as required by local ordinances or regulations. Use only the battery in the appropriate parts listing when replacing the battery pack. Use of an incorrect battery can result in ignition or explosion of the battery.



DANGER

The lithium battery can cause a fire, an explosion, or a severe burn. Do not recharge it, remove its polarized connector, disassemble it, heat it above 100°C (212°F), incinerate it, or expose its cell contents to water. Dispose of the battery as required by local ordinances or regulations. Use only the battery in the appropriate parts listing. Use of an incorrect battery can result in ignition or explosion of the battery.



DANGER

If the LCD breaks and the fluid from inside the LCD gets into your eyes or on your hands, immediately wash the affected areas with water for at least 15 minutes. Seek medical care if any symptoms from the fluid are present after washing.



DANGER

To avoid shock, do not remove the plastic cover that protects the lower part of the inverter card.



DANGER

Though the main batteries have low voltage, a short-circuited or grounded battery can produce enough current to burn personnel or combustible materials.



DANGER

Unless hot swap is allowed for the FRU being replaced, do as follows before removing it: power off the computer, unplug all power cords from electrical outlets, remove the battery pack, and disconnect any interconnecting cables.



خطر

قبل اعادة تشغيل الحاسب بعد الانتهاء من استبدال FRU، تأكد من أنه قد تم اعادة كل من المسامير و السوست وكل الأجزاء الصغيرة الأخرى في أماكنهم ولم يتم فقدهم داخل الحاسب.
ويمكن التحقق من ذلك عن طريق هز الحاسب والاستماع لأي صوت صاخب يصدر منه.
قد تؤدي الأجزاء أو الرقائق المعدنية الى حدوث دائرة قصر.



خطر

تحتوي بعض البطاريات الاحتياطية على كمية صغيرة من مادتي النيكل والكادميوم. لا تقم بفك أو اعادة شحن البطارية الاحتياطية ولا تقم أيضا بالقاءها في النار أو الماء ولا تتسبب في احداث دائرة قصر بها. قم بالتخلص من البطارية كما هو موضح في القوانين المحلية.
استخدم نوع البطارية المحدد والذي يوصى باستخدامه. حيث أنه قد يؤدي استخدام نوع بطارية غير صحيح الى اشتعالها أو انفجارها.



خطر

تحتوي حزمة البطارية على كمية صغيرة من مادة النيكل. لا تقم بفكها أو القاءها في النار أو الماء ولا تتسبب في احداث دائرة قصر بها. تخلص من حزمة البطارية وفقا لما هو موضح في القوانين المحلية. قم، عند استبدال حزمة البطارية، باستخدام الأنواع المحددة فقط والتي يوصى باستخدامها. حيث أنه قد يؤدي استخدام نوع بطارية غير صحيح الى اشتعالها أو انفجارها.



خطر

قد تتسبب بطارية الليثيوم في حدوث حريق أو انفجار أو حدوث حروق شديدة. لا تقم باعادة شحن البطارية أو ازالة موصل الاستقطاب الخاص بها ولا تحاول أيضا فكها أو تسخينها لأكثر من ١٠٠ درجة منوية (٢١٢ فهرنهايت) أو حرقها أو تعريض محتويات الخانة الخاصة بها للماء. قم بالتخلص من البطارية وفقا لما هو موضح في القوانين المحلية. استخدم نوع البطارية المحدد والذي يوصى باستخدامه. حيث أنه قد يؤدي استخدام نوع بطارية غير صحيح الى اشتعالها أو انفجارها.



خطر

اذا ما انكسرت شاشة LCD ولامس السائل الداخلي عينيك أو يديك، قم في الحال بغسلهما بالماء لمدة لا تقل عن ١٥ دقيقة. اذا ما وجدت أي أعراض بعد الغسل اطلب عندئذ المساعدة الطبية.



خطر

لتجنب التعرض لأي صدمات، لا تقم بازالة الغطاء البلاستيكي الذي يحمي الجزء الأسفل من بطاقة العاكس.



خطر

على الرغم من أن البطاريات الرئيسية يكون لها جهد منخفض، الا أنه قد تقوم البطاريات التي حدث قصور بها أو التي تم توصيلها أرضيا باصدار تيار يكفي لحدوث حروق للأفراد أو تعرض المواد القابلة للاشتعال للحريق.



خطر

ما لم يتم السماح بالتبديل الفوري لأي FRU الجاري استبداله بدون ضرورة اغلاق النظام، قم بتنفيذ ما يلي قبل ازالته. قم بايقاف تشغيل الحاسب ونزع كل أسلاك الطاقة من المخارج الكهربائية وقم أيضا بازالة حزمة البطارية ثم قم بفصل أي كابلات متصلة.



PERIGO

Antes de ligar o computador após a substituição da FRU, certifique-se de que todos os parafusos, molas e outras peças pequenas estejam no lugar e não estejam soltos dentro do computador. Verifique isso sacudindo o computador e procurando ouvir sons de peças soltas. Peças metálicas ou lascas de metal podem causar curto-circuito.



PERIGO

Algumas baterias reserva contêm uma pequena quantidade de níquel e cádmio. Não desmonte uma bateria reserva, recarregue-a, jogue-a no fogo ou na água, ou deixe-a entrar em curto-circuito. Descarte a bateria conforme requerido pelas leis ou regulamentos locais. Use somente a bateria nas partes listadas apropriadas. O uso de uma bateria incorreta pode resultar em combustão ou explosão da bateria.



PERIGO

O pacote da bateria contém uma pequena quantidade de níquel. Não o desmonte, jogue-o no fogo ou na água, ou deixe-o entrar em curto-circuito. Descarte o pacote da bateria conforme requerido pelas leis ou regulamentos locais. Use somente a bateria nas partes listadas apropriadas ao substituir o pacote da bateria. O uso de uma bateria incorreta pode resultar em combustão ou explosão da bateria.



PERIGO

A bateria de lítio pode causar incêndio, explosão ou graves queimaduras. Não a recarregue, remova seu conector polarizado, desmonte-a, aqueça-a acima de 100°C (212°F), incinere-a, ou exponha o conteúdo de sua célula à água. Descarte a bateria conforme requerido pelas leis ou regulamentos locais. Use somente a bateria nas partes listadas apropriadas. O uso de uma bateria incorreta pode resultar em combustão ou explosão da bateria.



PERIGO

Se o LCD quebrar e o fluido de dentro dele entrar em contato com seus olhos ou com suas mãos, lave as áreas afetadas imediatamente com água durante pelo menos 15 minutos. Procure cuidados médicos se algum sintoma causado pelo fluido surgir após a lavagem.



PERIGO

Para evitar choque elétrico, não remova a capa plástica que protege a parte inferior da placa inversora.



PERIGO

Embora as principais baterias possuam baixa voltagem, uma bateria em curto-circuito ou aterrada pode produzir corrente o bastante para queimar materiais de pessoal ou inflamáveis.



PERIGO

A menos que uma hot swap seja permitida para a FRU que está sendo substituída, faça o seguinte antes de removê-la: desligue o computador, desconecte todos os cabos de energia das tomadas, remova o pacote de baterias e desconecte quaisquer cabos de interconexão.



DANGER

Avant de remettre l'ordinateur sous tension après remplacement d'une unité en clientèle, vérifiez que tous les ressorts, vis et autres pièces sont bien en place et bien fixées. Pour ce faire, secouez l'unité et assurez-vous qu'aucun bruit suspect ne se produit. Des pièces métalliques ou des copeaux de métal pourraient causer un court-circuit.



DANGER

Certaines batteries de secours contiennent du nickel et du cadmium. Ne les démontez pas, ne les rechargez pas, ne les exposez ni au feu ni à l'eau. Ne les mettez pas en court-circuit. Pour les mettre au rebut, conformez-vous à la réglementation en vigueur. Lorsque vous remplacez la pile de sauvegarde ou celle de l'horloge temps réel, veillez à n'utiliser que les modèles cités dans la liste de pièces détachées adéquate. Une batterie ou une pile inappropriée risque de prendre feu ou d'exploser.



DANGER

La batterie contient du nickel. Ne la démontez pas, ne l'exposez ni au feu ni à l'eau. Ne la mettez pas en court-circuit. Pour la mettre au rebut, conformez-vous à la réglementation en vigueur. Lorsque vous remplacez la batterie, veillez à n'utiliser que les modèles cités dans la liste de pièces détachées adéquate. En effet, une batterie inappropriée risque de prendre feu ou d'exploser.



DANGER

La pile de sauvegarde contient du lithium. Elle présente des risques d'incendie, d'explosion ou de brûlures graves. Ne la rechargez pas, ne retirez pas son connecteur polarisé et ne la démontez pas. Ne l'exposez pas à une temperature supérieure à 100°C, ne la faites pas brûler et n'en exposez pas le contenu à l'eau. Mettez la pile au rebut conformément à la réglementation en vigueur. Une pile inappropriée risque de prendre feu ou d'exploser.



DANGER

Si le panneau d'affichage à cristaux liquides se brise et que vous recevez dans les yeux ou sur les mains une partie du fluide, rincez-les abondamment pendant au moins quinze minutes. Consultez un médecin si des symptômes persistent après le lavage.



DANGER

Afin d'éviter tout risque de choc électrique, ne retirez pas le cache en plastique protégeant la partie inférieure de la carte d'alimentation.



DANGER

Bien que le voltage des batteries principales soit peu élevé, le court-circuit ou la mise à la masse d'une batterie peut produire suffisamment de courant pour brûler des matériaux combustibles ou causer des brûlures corporelles graves.



DANGER

Si le remplacement à chaud n'est pas autorisé pour l'unité remplaçable sur site que vous remplacez, procédez comme suit avant de retirer l'unité : mettez l'ordinateur hors tension, débranchez tous les cordons d'alimentation des prises de courant, retirez le bloc de batterie et déconnectez tous les câbles d'interconnexion.



VORSICHT

Bevor nach einem FRU-Austausch der Computer wieder angeschlossen wird, muß sichergestellt werden, daß keine Schrauben, Federn oder andere Kleinteile fehlen oder im Gehäuse vergessen wurden. Der Computer muß geschüttelt und auf Klappergeräusche geprüft werden. Metallteile oder-splitter können Kurzschlüsse erzeugen.



VORSICHT

Die Bereitschaftsbatterie, die sich unter dem Diskettenlaufwerk befindet, kann geringe Mengen Nickel und Cadmium enthalten. Sie darf nur durch die Verkaufsstelle oder den IBM Kundendienst ausgetauscht werden. Sie darf nicht zerlegt, wiederaufgeladen, kurzgeschlossen, oder Feuer oder Wasser ausgesetzt werden. Die Batterie kann schwere Verbrennungen oder Verätzungen verursachen. Bei der Entsorgung die örtlichen Bestimmungen für Sondermüll beachten. Beim Ersetzen der Bereitschafts-oder Systembatterie nur Batterien des Typs verwenden, der in der Ersatzteilliste aufgeführt ist. Der Einsatz falscher Batterien kann zu Entzündung oder Explosion führen.



VORSICHT

Akkus enthalten geringe Mengen von Nickel. Sie dürfen nicht zerlegt, wiederaufgeladen, kurzgeschlossen, oder Feuer oder Wasser ausgesetzt werden. Bei der Entsorgung die örtlichen Bestimmungen für Sondermüll beachten. Beim Ersetzen der Batterie nur Batterien des Typs verwenden, der in der Ersatzteilliste aufgeführt ist. Der Einsatz falscher Batterien kann zu Entzündung oder Explosion führen.



VORSICHT

Die Systembatterie ist eine Lithiumbatterie. Sie kann sich entzünden, explodieren oder schwere Verbrennungen hervorrufen. Batterien dieses Typs dürfen nicht aufgeladen, zerlegt, über 100°C erhitzt oder verbrannt werden. Auch darf ihr Inhalt nicht mit Wasser in Verbindung gebracht oder der zur richtigen Polung angebrachte Verbindungsstecker entfernt werden. Bei der Entsorgung die örtlichen Bestimmungen für Sondermüll beachten. Beim Ersetzen der Batterie nur Batterien des Typs verwenden, der in der Ersatzteilliste aufgeführt ist. Der Einsatz falscher Batterien kann zu Entzündung oder Explosion führen.



VORSICHT

Die Leuchtstoffröhre im LCD-Bildschirm enthält Quecksilber. Bei der Entsorgung die örtlichen Bestimmungen für Sondermüll beachten. Der LCD-Bildschirm besteht aus Glas und kann zerbrechen, wenn er unsachgemäß behandelt wird oder der Computer auf den Boden fällt. Wenn der Bildschirm beschädigt ist und die darin befindliche Flüssigkeit in Kontakt mit Haut und Augen gerät, sollten die betroffenen Stellen mindestens 15 Minuten mit Wasser abgespült und bei Beschwerden anschließend ein Arzt aufgesucht werden.



VORSICHT

Aus Sicherheitsgründen die Kunststoffabdeckung, die den unteren Teil der Spannungswandlerplatine umgibt, nicht entfernen.



VORSICHT

Obwohl Hauptbatterien eine niedrige Spannung haben, können sie doch bei Kurzschluß oder Erdung genug Strom abgeben, um brennbare Materialien zu entzünden oder Verletzungen bei Personen hervorzurufen.



VORSICHT

Wenn ein Austausch der FRU bei laufendem Betrieb nicht erlaubt ist, gehen Sie beim Austausch der FRU wie folgt vor: Schalten Sie den Computer aus, ziehen Sie alle Netzkabel von den Netzsteckdosen ab, entfernen Sie den Akku und ziehen Sie alle miteinander verbundenen Kabel ab.



סכנה

לפני הפעלת המחשב לאחר החלפת FRU יש לוודא שכל הברגים, הקפיצים, וחלקים קטנים אחרים נמצאים במקומם ואינם חופשיים לזוז בתוך המחשב. כדי לוודא זאת, יש לטלטל את המחשב ולהקשיב לגילוי קולות שקשוק. חלקי או שבבי מתכת עלולים לגרום לקצרים חשמליים.



סכנה

סוללות המתנה מסוימות מכילות כמות קטנה של ניקל וקדמיום. אין לפרק סוללת המתנה, לטעון אותה מחדש, להשליך אותה לאש או למים או לקצר אותה. יש לסלק את הסוללה כנדרש על ידי התקנות והחוקים המקומיים. יש להשתמש רק בסוללה המופיעה ברשימת החלקים המתאימה. שימוש בסוללה לא מתאימה עלול לגרום להצתה או התפוצצות של הסוללה.



סכנה

מארז הסוללה מכיל כמות קטנה של ניקל וקדמיום. אין לפרק את מארז הסוללה, להשליך אותו לאש או למים או לקצר אותו. יש לסלק את מארז הסוללה כנדרש על ידי התקנות והחוקים המקומיים. יש להשתמש רק בסוללה המופיעה ברשימת החלקים המתאימה בזמן החלפת מארז הסוללה. שימוש בסוללה לא מתאימה עלול לגרום להצתה או התפוצצות של הסוללה.



סכנה

סוללת הליתיום עלולה לגרום לשריפה, להתפוצצות או לכוויות קשות. אין לטעון אותה מחדש, לסלק את המחבר המקוטב שלה, לפרק אותה או לחמם אותה לטמפרטורה העולה על 100 מעלות צלזיוס. אין לשרוף את הסוללה ואין לחשוף את תוכן התא למים. יש לסלק את הסוללה כנדרש בתקנות ובחוקים המקומיים. יש להשתמש רק בסוללה המופיעה ברשימת החלקים המתאימים. שימוש בסוללה אחרת עלול לגרום לסכנת שריפה או התפוצצות.



סכנה

אם מסך תגביש הנוזלי (LCD) נשבר והנוזל מתוך המסך בא במגע עם עיניכם או ידיכם, שטפו את האזורים הנגועים מיד במים במשך 15 דקות לפחות. פנו לקבלת עזרה רפואית אם תסמינים הנובעים מהמגע עם הנוזל נמשכים לאחר השטיפה.



סכנה

כדי למנוע התחשמלות, אין להסיר את מכסה הפלסטיק המגן על חלקו התחתון של הכונן הקשיח.



סכנה

אף שהסוללות הראשיות הן בעלות מתח נמוך, סוללה מקוצרת או מוארקת עלולה להפיק זרם מספיק לגרימת כוויות או להצתת חומרים דליקים.

סכנה

אלא אם כן מותרת ׳החלפה חמה׳ של ה-FRU המוחלף, פעלו כדלהלן לפני הסרתו:
כבו את המחשב, נתקו את כל כבלי החשמל מהשקעים, הוציאו את מארז הסוללות ונתקו את כל הכבלים המחוברים.

危険

FRU の交換後、コンピューターの電源を入れる前に、ねじ、バネ、その他の小さな部品がすべて正しい位置にあり、コンピューターの内部でそれらが緩んでいないことを確認してください。これを確認するには、コンピューターを振って、カチャカチャと音がしないか確認します。金属部品や金属破片はショートの原因になることがあります。

危険

予備バッテリーの中には少量のニッケルとカドミウムが含まれているものがあります。したがって、予備バッテリーの分解、再充電、火または水の中への投棄、またはショートさせることは決して行わないでください。バッテリーを廃棄する場合は地方自治体の条例に従ってください。適切なパーツ・リストにあるバッテリーだけを使用してください。誤ったバッテリーを使用すると、バッテリーが発火したり、爆発したりすることがあります。

危険

バッテリー・パックには少量のニッケルが含まれています。バッテリー・パックを分解したり、火または水の中に投げ込んだり、ショートさせないでください。バッテリー・パックの廃棄にあたっては、地方自治体の条例または規則に従ってください。バッテリー・パックを交換するときは、適切なパーツ・リストにあるバッテリーだけを使用してください。誤ったバッテリーを使用すると、バッテリーが発火したり、爆発したりすることがあります。

危険

リチウム・バッテリーは、火災、爆発、または重症のやけどを引き起こすことがあります。バックアップ・バッテリーの充電、その極性コネクターの取り外し、バッテリー本体の分解、
100 ℃ (212 °F) 以上への加熱、焼却、電池の中身を水に浸すことはしないでください。バッテリーを廃棄する場合は地方自治体の条例に従ってください。適切なパーツ・リストにあるバッテリーだけを使用してください。誤ったバッテリーを使用すると、バッテリーが発火したり、爆発したりすることがあります。

危険

LCD が破損し、 LCD の中の液体が目に入ったり、手に触れたりした場合は、液体が触れた部分を少なくとも 15 分間洗い流してください。洗い流した後に、液体によって何らかの症状が現れた場合は、医師の治療を受けてください。



危険

感電を防ぐため、インバーター・カードの下部を保護しているプラスチック・カバーを外さないでください。



危険

メイン・バッテリーの電圧は低くても、ショートしたり、接地したバッテリーが、作業者にやけどを負わせたり、可燃物を燃やすだけの電流を発生させる場合があります。



危険

交換しようとしている FRU がホット・スワップに対応していない場合、それを取り外す前に、コンピューターの電源をオフにし、すべての電源コードをコンセントから抜き、バッテリー・パックを取り外して、相互接続しているケーブルをすべて切り離してください。



위험

FRU를 교체하고 나서 컴퓨터 전원을 켜기 전에 모든 나사, 스프링 및 기타 작은 부품들이 올바른 위치에 있는지, 컴퓨터 내부에 단단하게 연결되어 있는지 확인하십시오. 컴퓨터를 흔들어 달깍거리는 소리가 나지 않는지 확인하십시오. 금속 부품 또는 금속 조각은 누전을 일으킬 수 있습니다.



위험

일부 보조 배터리에는 소량의 니켈 및 카트뮴이 포함되어 있습니다. 보조 배터리를 분해하거나, 다시 충전하거나, 불 또는 물에 던지거나, 단락시키지 마십시오. 배터리 팩을 폐기할 때에는 해당 지역의 법률 규정을 따르십시오. 배터리 팩을 교체할 때에는 올바른 배터리만 사용하십시오. 올바르지 않은 배터리를 사용하면 배터리가 발화되거나 폭발할 수 있습니다.



위험

배터리 팩에는 소량의 니켈이 포함되어 있습니다. 배터리 팩을 분해하거나, 불 또는 물에 던지거나, 단락시키지 마십시오. 배터리 팩을 폐기할 때에는 해당 지역의 법률 규정을 따르십시오. 배터리 팩을 교체할 때에는 올바른 배터리만 사용하십시오. 올바르지 않은 배터리를 사용하면 배터리가 발화되거나 폭발할 수 있습니다.



위험

리튬 배터리는 화재, 폭발 또는 심각한 화상을 일으킬 수 있습니다. 리튬 배터리를 다시 충전하거나, 극성 커넥터를 제거하거나, 분해하거나, 100C(212F) 이상으로 가열하거나, 소각하거나, 전지 내용물을 물에 노출시키지 마십시오. 배터리를 폐기할 때에는 해당 지역을 법률 규정을 따르십시오. 올바른 배터리만 사용하십시오. 올바르지 않은 배터리를 사용하면 배터리가 발화되거나 폭발할 수 있습니다.



위험

LCD가 파손되어 LCD 내부의 액체가 눈에 들어가거나 손에 묻으면 즉시 깨끗한 물로 15분 이상 닦아 내십시오. 씻은 후에 조금이라도 이상을 느끼면 즉시 병원에 가서 의사의 진찰을 받아야 합니다.



위험

전기적 위험을 방지하려면 인버터 카드의 아래 부분을 보호하는 플라스틱 덮개를 제거하지 마십시오.



위험

기본 배터리의 전압은 낮지만, 단락되거나 접지된 배터리는 화상을 입히기에 충분한 전류와 가연성 물질을 발생시킬 수 있습니다.



위험

FRU 교체 시 Hot Swap이 지원되지 않는 경우, FRU를 제거하기 전에 컴퓨터의 전원을 끄고, 전기 콘센트에서 전원 코드를 분리하고, 배터리를 제거한 후, 연결된 모든 케이블을 분리하십시오.



PELIGRO

Antes de encender el sistema despues de sustituir una FRU, compruebe que todos los tornillos, muelles y demás piezas pequeñas se encuentran en su sitio y no se encuentran sueltas dentro del sistema. Compruébelo agitando el sistema y escuchando los posibles ruidos que provocarían. Las piezas metálicas pueden causar cortocircuitos eléctricos.



PELIGRO

Algunas baterías de reserva contienen una pequeña cantidad de níquel y cadmio. No las desmonte, ni recargue, ni las eche al fuego o al agua ni las cortocircuite. Deséchelas tal como dispone la normativa local. Utilice sólo baterías que se encuentren en la lista de piezas. La utilización de una batería no apropiada puede provocar la ignición o explosión de la misma.



PELIGRO

Las baterías contienen pequeñas cantidades de níquel. No las desmonte, ni recargue, ni las eche al fuego o al agua ni las cortocircuite. Deséchelas tal como dispone la normativa local. Utilice sólo baterías que se encuentren en la lista de piezas al sustituir la batería. La utilización de una batería no apropiada puede provocar la ignición o explosión de la misma.



PELIGRO

La batería de repuesto es una batería de litio y puede provocar incendios, explosiones o quemaduras graves. No la recargue, ni quite el conector polarizado, ni la desmonte, ni caliente por encima de los 100°C (212°F), ni la incinere ni exponga el contenido de sus celdas al agua. Deséchela tal como dispone la normativa local.



PELIGRO

Si la LCD se rompe y el fluido de su interior entra en contacto con sus ojos o sus manos, lave inmediatamente las áreas afectadas con agua durante 15 minutos como mínimo. Obtenga atención medica si se presenta algún síntoma del fluido despues de lavarse.



PELIGRO

Para evitar descargas, no quite la cubierta de plástico que rodea la parte baja de la tarjeta invertida.



PELIGRO

Aunque las baterías principales tienen un voltaje bajo, una batería cortocircuitada o con contacto a tierra puede producir la corriente suficiente como para quemar material combustible o provocar quemaduras en el personal.



PELIGRO

Salvo que se permita el intercambio en caliente para la unidad sustituible localmente, realice lo siguiente antes de extraerla: apague el sistema, desconecte todos los cables de alimentación de las tomas de alimentación eléctrica, extraiga la batería y desconecte los cables de interconexión.



危險

完成 FRU 更換之後，在開啟電腦的電源之前，請確定所有螺絲、彈簧及其他小零件都已歸位，沒有遺留在電腦內部。
若要確認這一點，請搖晃電腦，聽聽看是否有卡嗒的聲響。
金屬零件或儀錶的火花會造成電線短路。



危險

部分備用電池含有微量的鋰和鎘。請勿拆開備用電池、再充電、丟入火或水中，或使其形成短路。請按照當地法令或規定來棄置電池。

僅限使用零件清單中的電池。使用不適當的電池會導致電池起火或爆炸。



危險

電池套件含有微量的鋰。請勿拆開電池套件、丟入火或水中，或使其形成短路。
請按照當地法令或規定來棄置電池套件。

更換電池套件時，僅限使用零件清單中的電池。使用不適當的電池會導致電池起火或爆炸。



危險

鋰電池會導致起火、爆炸或嚴重燒傷。請勿再充電、拔除其電極接頭、拆開、加熱超過 100°C (212°F) 、焚燒，或讓電池組成物浸到水。請按照當地法令或規定來棄置電池。
僅限使用零件清單中的電池。使用不適當的電池會導致電池起火或爆炸。

危險

如果 LCD 破裂導致 LCD 流出的液體沾到您的眼睛或手，請立即以清水沖洗沾染部位至少 15 分鐘。如果在清洗後出現該液體所造成的任何症狀，請就醫治療。

危險

為避免電擊，請勿拆下轉換卡下面的塑膠護蓋。

危險

雖然主電池的電壓很低，但短路或接地電池所產生的電流，仍足以使人燒傷或使可燃物質起火。

危險

除非 FRU 允許以熱抽換來替換，否則請依下列方式將其移除：將電腦關機，拔除插座上所有電源線，移除電池包，並拔開任何交互連接的線材。

Chapter 2. General checkout

This chapter presents the following information:

- "What to do first" on page 21
- "Power system checkout" on page 22

Some descriptions in this chapter might not apply to your particular computer.

Before you go to the checkout guide, be sure to read the following important notes.

Important notes:

- **Only certified trained personnel should service the computer.**
- **Before replacing any FRU, read the entire page on removing and replacing FRUs.**
- **When you replace FRUs, it is recommended to use new nylon-coated screws.**
- **Be extremely careful during such write operations as copying, saving, or formatting.** Drives in the computer that you are servicing sequence might have been altered. If you select an incorrect drive, data or programs might be overwritten.
- **Replace a FRU only with another FRU of the correct model.** When you replace a FRU, ensure that the model of the machine and the FRU part number are correct.
- **A FRU should not be replaced because of a single, unreproducible failure.** Single failures can occur for a variety of reasons that have nothing to do with a hardware defect, such as cosmic radiation, ESD, or software errors. Consider replacing a FRU only when a problem recurs. If you suspect that a FRU is defective, clear the error log and run the test again. If the error does not recur, do not replace the FRU.
- **Be careful not to replace a nondefective FRU.**

What to do first

When you return a FRU, you must include the following information in the parts exchange form or parts return form that you attach to it:

1. Name and phone number of service technician
2. Date of service
3. Date on which the machine failed
4. Date of purchase
5. Failure symptoms, error codes appearing on the display, and beep symptoms
6. Procedure index and page number in which the failing FRU was detected
7. Failing FRU name and part number
8. Machine type, model number, and serial number
9. Customer's name and address

Note: During the warranty period, the customer may be responsible for repair costs if the computer damage was caused by misuse, accident, modification, unsuitable physical or operating environment, or improper maintenance by the customer. Following is a list of some common items that are not covered under warranty and some symptoms that might indicate that the system was subject to stress beyond normal use.

Before checking problems with the computer, determine whether the damage is covered under the warranty by referring to the following list:

The following are not covered under warranty:

- LCD panel cracked from the application of excessive force or from being dropped
- Scratched (cosmetic) parts
- Distortion, deformation, or discoloration of the cosmetic parts

© Copyright Lenovo 2021

- Plastic parts, latches, pins, or connectors that have been cracked or broken by excessive force
- Damage caused by liquid spilled into the system
- Damage caused by the improper insertion of a PC Card or the installation of an incompatible card
- Diskette drive damage caused by pressure on the diskette drive cover, foreign material in the drive, or the insertion of a diskette with multiple labels
- Damaged or bent diskette eject button
- Fuses blown by attachment of a nonsupported device
- Forgotten computer password (making the computer unusable)
- Sticky keys caused by spilling a liquid onto the keyboard
- Use of an incorrect ac power adapter on laptop products

The following symptoms might indicate damage caused by nonwarranted activities:
- Missing parts might be a symptom of unauthorized service or modification.
- Check for obvious damage to a hard disk drive. If the spindle of a hard disk drive becomes noisy, the hard disk drive might have been dropped or subject to excessive force.

Power system checkout

If you suspect a power problem, see the appropriate one of the following power supply checkouts:
- “Checking the ac power adapter” on page 22
- “Checking the built-in battery and operational charging” on page 22

Checking the ac power adapter

You are here because the computer fails only when the ac power adapter is used.
- If the system status indicator is not on when an ac power source is connected, check the power cord of the ac power adapter for correct continuity and installation.
- If the computer does not charge during operation, go to “Checking the built-in battery and operational charging” on page 22.

To check the ac power adapter, measure the output voltage across the plug of the ac power adapter cable to see if the voltage is correct.

Notes:
- Noise from the ac power adapter does not always indicate a defect.
- Ensure that you use the ac power adapter that is shipped with the computer to provide enough power to the computer. Otherwise, a message might be displayed, prompting you that the computer will not be charged or will be charged slowly.

Checking the built-in battery and operational charging

This computer supports only batteries specially designed for this specific system and manufactured by Lenovo or an authorized builder. The system does not support unauthorized batteries or batteries designed for other systems. If an unauthorized battery or a battery designed for another systems is installed, the system will not charge.

Attention: Lenovo has no responsibility for the performance or safety of unauthorized batteries, and provides no warranties for failures or damage arising out of their use.

To check whether the battery charges properly during operation, do the following:

1. Discharge the battery until the remained battery power is less than 50%.
2. Connect the computer to ac power to charge the battery. If the battery status icon indicates that the battery is not charging, remove the battery and let it return to room temperature.
3. Reinstall the battery. If the battery is still not charging, replace the battery.

4. Check the battery status icon again. If the same error still exists, replace the system board.

Chapter 3. Create and use a USB repair shim

This chapter contains the following topics:

"What is a USB repair shim?" on page 25

"Create a USB repair shim" on page 25

"Use the USB repair shim" on page 26

What is a USB repair shim?

You can create a USB repair shim by writing a repair shim image to a USB storage drive. With the USB repair shim, you can:

- Refresh the Chromebook system with the latest firmware.
- Diagnose problems and restore the system to factory settings.

Note: Before replacing any FRUs, use the USB repair shim to diagnose and identify problems.

When you use the USB repair shim to diagnose problems, the Chromebook enters the factory-test-image environment and runs through the following factory test items.

Table 1. Factory test items

Test item	Description
Final Functional Test (FFT)	The FFT is designed to test the function of individual component, such as the display, audio, camera, and keyboard. Some test items might require an HDMI™ monitor or SD card. If the devices are not available, the tests can be bypassed. As a result, the overall test is marked as failed.
RunIn and FAT	The RunIn and FAT are designed to test how the system functions under stress by running the maximum workload. It takes about 10 minutes to finish.
Google Required Tests (GRT)	The GRT is designed to check the system status and help reset the system back to factory settings. If any test fails, the GRT has to be forced to end.

Create a USB repair shim

Step 1. Prepare a USB storage drive with at least 8 GB of storage capacity.

Attention: The creation process deletes anything stored on the USB storage drive. To avoid data loss, backup all the data that you want to keep.

Step 2. Download the image file of the repair shim from https://support.lenovo.com. A Lenovo service credential is required to download the image file.

Note: Make sure to download the latest version of the image file. A shim created with an earlier version of the image file might cause the repair process to fail.

Step 3. Use a disk imaging tool to write the downloaded image to the USB storage drive. An open-source tool Win32 Disk Imager is available at http://sourceforge.net/projects/win32diskimager.

© Copyright Lenovo 2021

Use the USB repair shim

Step 1. Press the power button together with **esc** and ↻. The Chrome operating system recovery screen is displayed. Follow the on-screen instructions to enter the developer mode.

Step 2. Remove the base cover assembly, disconnect the built-in battery from the system board, and then attach the ac power adapter to the Chromebook.

Step 3. Connect the prepared USB storage drive to the Chromebook and after the operating system verification screen is displayed, Press Ctrl + U.

Step 4. Type **I** in the window prompted to install the shim image. The Chromebook will enter the factory-test-image environment after the process is completed.

Step 5. Detach the ac power adapter, reconnect the built-in battery to the system board, and then reattach the ac power adapter to the Chromebook.

Step 6. Remove the USB repair shim from the Chromebook and store it in a safe place.

Step 7. Follow the on-screen instructions to start the FFT.

Note: If the FFT detects a defective component, turn off the Chromebook, detach the ac power adapter, and then replace the defective component.

Step 8. Start the RunIn and FAT (This is an optional operation.)

Step 9. Follow the on-screen instructions to start the GRT. If the tests finish successfully, all data stored on the Chromebook is deleted and the Chromebook is turned off. If the GRT fails, it might result from hardware identity (HWID) mismatch and write-protect malfunction. Use the following information to identify problems.

Problem	Description
HWID mismatch	A set of valid hardware identities (HWIDs) is provided by Google. Google logs the exact hardware combination into a Chromebook and creates an HWID. The HWID is used for the following purposes: • Auto-update new patches and software for the lifetime of the Chromebook • Reset the Chromebook to factory settings HWID mismatch can be caused by using unauthorized or missing parts. If the write-protect function is not turned off before recovering the Chromebook with the USB repair shim, it can also cause HWID mismatch.
Write-protect malfunction	The Chromebook system cannot be finalized until the write-protect function is turned on.

Note: You can terminate the GRT when the tests have to be bypassed because they cannot be performed. To end the process, press **f**.

Chapter 4. Identifying FRUs (CRUs)

Locating FRUs and CRUs

This topic introduces the following service parts:

"Major FRUs and CRUs" on page 28

"LCD FRUs" on page 30

"Miscellaneous parts" on page 31

Notes:

- Each FRU is available for all types or models, unless otherwise specified.
- **CRU statement for customers:**
  You can resolve some problems with your product with a replacement part you can install yourself, called a "Customer Replaceable Unit" or "CRU." Some CRUs are designated as self-service CRUs and others are designated as optional-service CRUs. *Installation of self-service CRUs is your responsibility. For optional-service CRUs, you can either install the CRU yourself or you can request that a Service Provider install the CRU according to the warranty service for your product.* If you intend on installing the CRU, Lenovo will ship the CRU to you. CRU information and replacement instructions are shipped with your product and are available from Lenovo at any time upon request. You can find a list of CRUs for your product in this *Hardware Maintenance Manual*. An electronic version of this manual can be found at https://support.lenovo.com. Click **Documentation** and then follow the on-screen instructions to find the manual for your product. You might be required to return the defective CRU. When return is required: (1) return instructions, a prepaid shipping label, and a container will be included with the replacement CRU; and (2) you might be charged for the replacement CRU if Lenovo does not receive the defective CRU within thirty (30) days of your receipt of the replacement CRU. See your Lenovo Limited Warranty documentation for full details.

  Chromebook contains the following types of CRUs and FRUs:
  - **Self-service CRUs:** Refer to parts that can be installed or replaced easily by customer themselves or by trained service technicians at an additional cost.
  - **Optional-service CRUs:** Refer to parts that can be installed or replaced by customers with a greater skill level. Trained service technicians can also provide service to install or replace the parts under the type of warranty designated for the customer's machine.
  - **FRUs:** Refer to parts that must be installed or replaced only by trained service technicians. If customers choose to replace the FRUs by themselves, the product warranty might be affected.

© Copyright Lenovo 2021

Major FRUs and CRUs

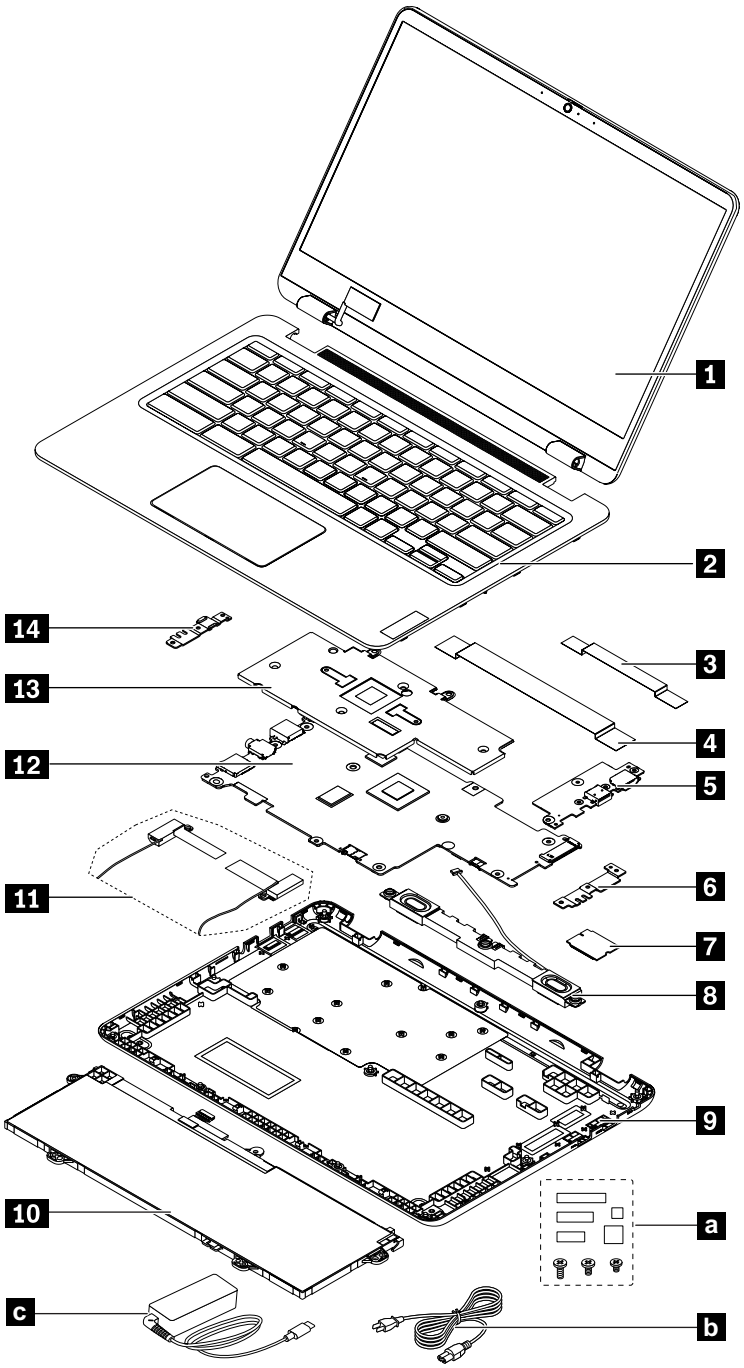

Note: Depending on the Chromebook model, your Chromebook might look different from the illustration above.

Table 2. Major FRUs and CRUs

No.	FRU description	Self-service CRU	Optional-service CRU
1	LCD unit	No	No
2	C cover with keyboard assembly	No	No

Table 2. Major FRUs and CRUs (continued)

3	I/O board cable 22 pin FFC	No	No
4	I/O board cable 30 pin FFC	No	No
5	I/O board	No	No
6	Right I/O board bracket	No	Yes
7	Wireless LAN card	No	No
8	Speaker assembly	No	No
9	Base cover assembly	No	Yes
10	Built-in battery	No	No
11	Wireless LAN antenna kits	No	No
12	System board	No	No
13	Heatsink	No	No
14	Left USB board bracket	No	Yes
a	Miscellaneous parts kits (“Miscellaneous parts” on page 31)	No	No
b	Power cord	Yes	No
c	ac power adapter	Yes	No

* for selected models

LCD FRUs

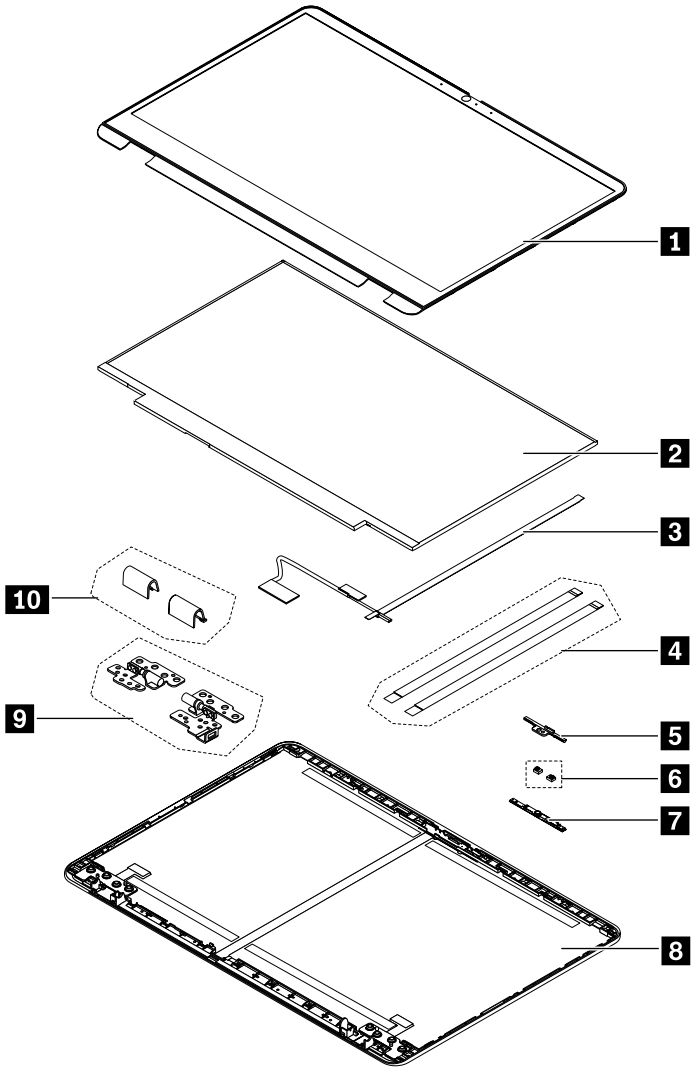

Table 3. LCD FRUs and CRUs

No.	FRU description	Self-service CRU	Optional-service CRU
1	LCD bezel	No	No
2	LCD panel	No	No
3	LCD and camera cable	No	No
4	Elastic tapes	No	No
5	Camera privacy shutter	No	No
6	Microphone rubbers	No	No
7	Camera board	No	No
8	LCD rear cover assembly	No	No
9	LCD Hinge	No	No
10	LCD hinge caps	No	No

Miscellaneous parts

Table 4. Miscellaneous parts

FRU descriptions	Self-service CRU	Optional-service CRU
Screw pack: • Screw M1.6 x L1.8, black (3) • Screw M2 x L2.5, black (8) • Screw M2 x L3, black (3) • Screw M2 x L4, black (16) • Screw M2.5 x L5, silver(6) • Screw M2.5 x L6, black (1) • Screw M2.5 x L8, black (9) • Spec	No	No

Looking up FRU information

For detailed FRU information, including part numbers, descriptions, and substitution part numbers, go to: https://support.lenovo.com/partslookup

Chapter 5. Removing or replacing a FRU

This chapter provides instructions on how to remove or replace a FRU.

CRU statement for customers:
You can resolve some problems with your product with a replacement part you can install yourself, called a "Customer Replaceable Unit" or "CRU." Some CRUs are designated as self-service CRUs and others are designated as optional-service CRUs. *Installation of self-service CRUs is your responsibility. For optional-service CRUs, you can either install the CRU yourself or you can request that a Service Provider install the CRU according to the warranty service for your product.* If you intend on installing the CRU, Lenovo will ship the CRU to you. CRU information and replacement instructions are shipped with your product and are available from Lenovo at any time upon request. You can find a list of CRUs for your product in this *Hardware Maintenance Manual*. An electronic version of this manual can be found at https://support.lenovo.com. Click **Documentation** and then follow the on-screen instructions to find the manual for your product. You might be required to return the defective CRU. When return is required: (1) return instructions, a prepaid shipping label, and a container will be included with the replacement CRU; and (2) you might be charged for the replacement CRU if Lenovo does not receive the defective CRU within thirty (30) days of your receipt of the replacement CRU. See your Lenovo Limited Warranty documentation for full details.

General guidelines

When removing or replacing a FRU, ensure that you observe the following general guidelines:

1. Do not try to service any computer unless you have been trained and certified. An untrained person runs the risk of damaging parts.
2. Begin by removing any FRUs that have to be removed before replacing the failing FRU. Any such FRUs are listed at the beginning of each FRU replacement procedure. Remove them in the order in which they are listed.
3. Follow the correct sequence in the steps for removing a FRU, as shown in the illustrations by the numbers in square callouts.
4. When removing a FRU, move it in the direction as shown by the arrow in the illustration.
5. To install a new FRU in place, perform the removal procedure in reverse and follow any notes that pertain to replacement.
6. If screws are missing, look up details in "Miscellaneous parts" on page 31 for replacement screws and order them through the Lenovo CRM system.
7. When replacing the base cover, reapply all labels that come with the replacement base cover. If some original labels are not included with the replacement base cover, peal them off from the original base cover and paste them on the replacement base cover.

DANGER

Before removing any FRU or CRU, shut down the computer and unplug all power cords from electrical outlets.

Attention:

- After replacing a FRU, do not turn on the computer until you have ensured that all screws, springs, and other small parts are in place and none are loose inside the computer. Verify this by shaking the computer gently and listening for rattling sounds. Metallic parts or metal flakes can cause electrical short circuits.

© Copyright Lenovo 2021

- The system board is sensitive to and can be damaged by ESD. Before touching it, establish personal grounding by touching a ground point with one hand or by using an ESD strap (P/N 6405959).

Disabling the built-in battery

Before replacing any FRU, ensure that you disable the built-in battery.

To disable the built-in battery, press F5 together with the power button, and at the same time detach the ac power adapter from the Chromebook.

Note: Power supply from the built-in battery will resume after you reconnect the Chromebook to the ac power adapter.

1010 Base cover assembly

Removal steps of the base cover assembly

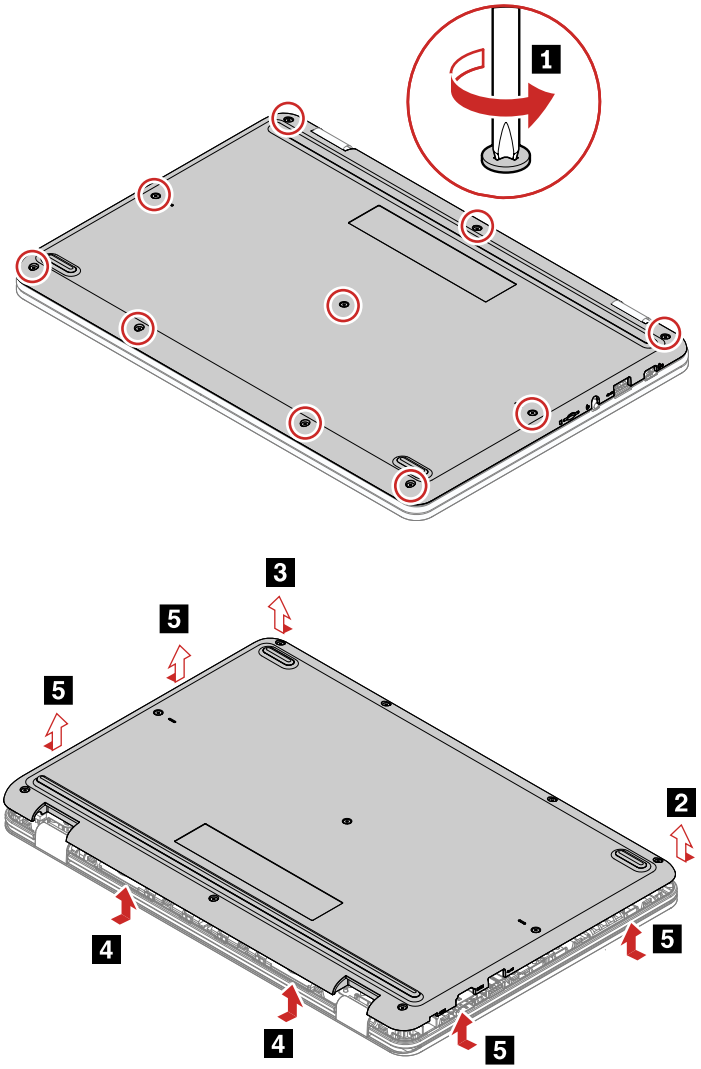

Applying labels to the base cover assembly

Note: Depending on the country or region of delivery, the labels might be slightly different from the ones in the following illustration.

The new base cover assembly FRU is shipped with a kit containing labels of several kinds. Apply those labels when you replace the base cover assembly. For the labels that are not shipped with the new base cover assembly, peel them from the old base cover assembly, and adhere them to the new one.

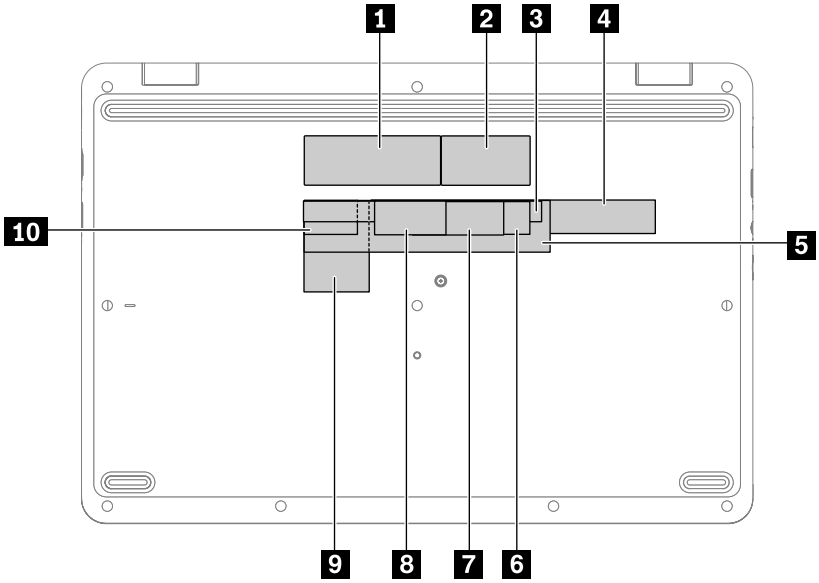

Table 5. All base cover labels

Label	Label description	Applied country/region	Label dimensions
1	Rating label	all	66 mm x 24 mm
2	Rating print label	WW / India	43 mm x 24 mm
3	Argentina label	Argentina	68 mm x 6 mm
4	Taiwan label	Taiwan	70 mm x 10 mm
5	Adapter label	WW	65 mm x 20 mm
6	Israel/US/CA/TW label	Israel/US/CA/TW	32 mm x 10 mm
7	Indonesia rating label	Indonesia	26 mm x 10 mm
8	South Africa label	South Africa	20 mm x 10 mm
9	India BIS label	India	22 mm x 30 mm
10	Malaysia label	Malaysia	8 mm x 8 mm

1020 Built-in battery

Important notice for replacing a battery
Attention: Lenovo has no responsibility for the performance or safety of unauthorized batteries, and provides no warranties for failures or damage arising out of their use.

For access, remove these FRUs in order:
- “1010 Base cover assembly” on page 34

Removal steps of the built-in battery

DANGER

Use only the authorized battery specified for your computer. Any other battery could ignite or explode.

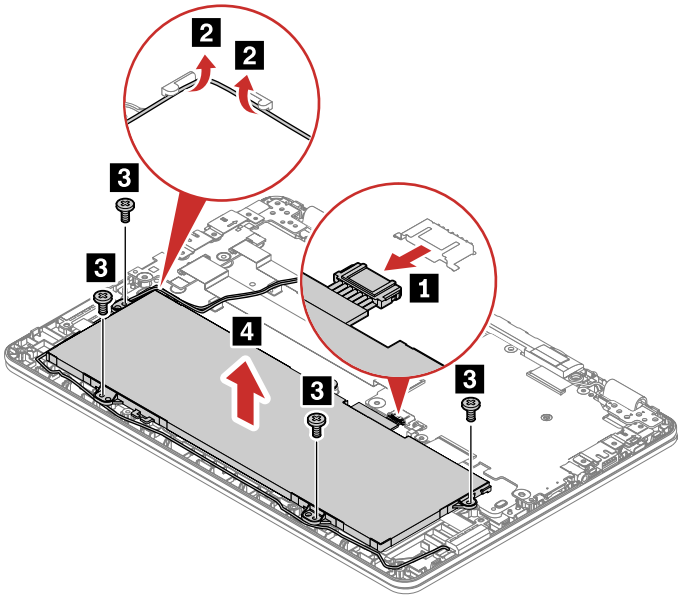

Screw (quantity)	Color
M2 × 4 mm, flat-head, nylon-coated (4)	Black

When installing:

- Ensure that the connectors are attached firmly.
- Ensure that the base cover assembly is attached firmly; otherwise, battery connection might fail.

1030 Wireless LAN card

For access, remove this FRU in order:

- “1010 Base cover assembly” on page 34

Removal steps of the wireless LAN card

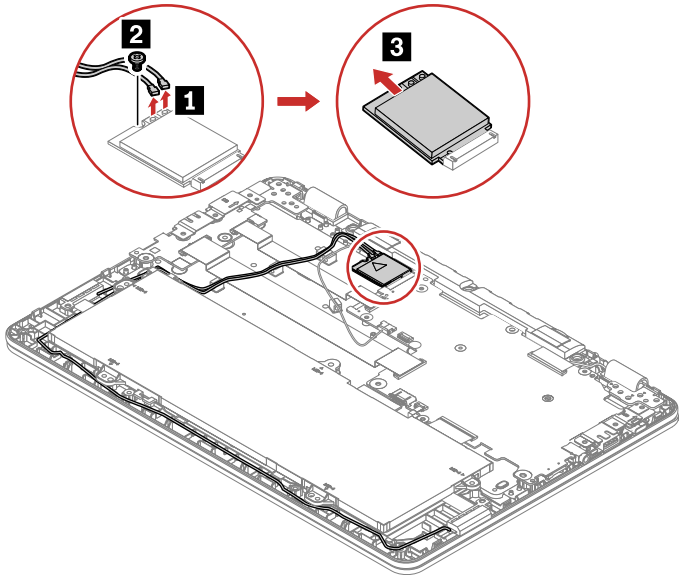

Screw (quantity)	Color
M2 × 3 mm, flat-head, nylon-coated (1)	Black

When installing: Plug the black cable into the main connector, and the gray cable into the auxiliary connector on the card.

1040 Speaker assembly

For access, remove these FRUs in order:
- “1010 Base cover assembly” on page 34

Removal steps of the speaker assembly

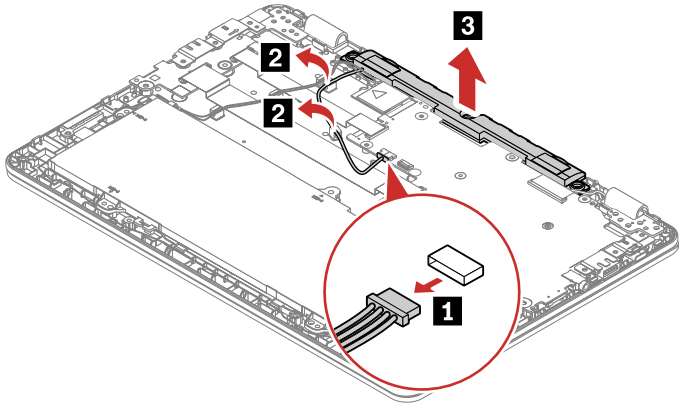

When installing: Ensure that the connector is attached firmly.

1050 Left I/O board, I/O bracket and I/O cables

For access, remove these FRUs in order:
- “1010 Base cover assembly” on page 34

Removal steps of left I/O board, I/O bracket and I/O cables

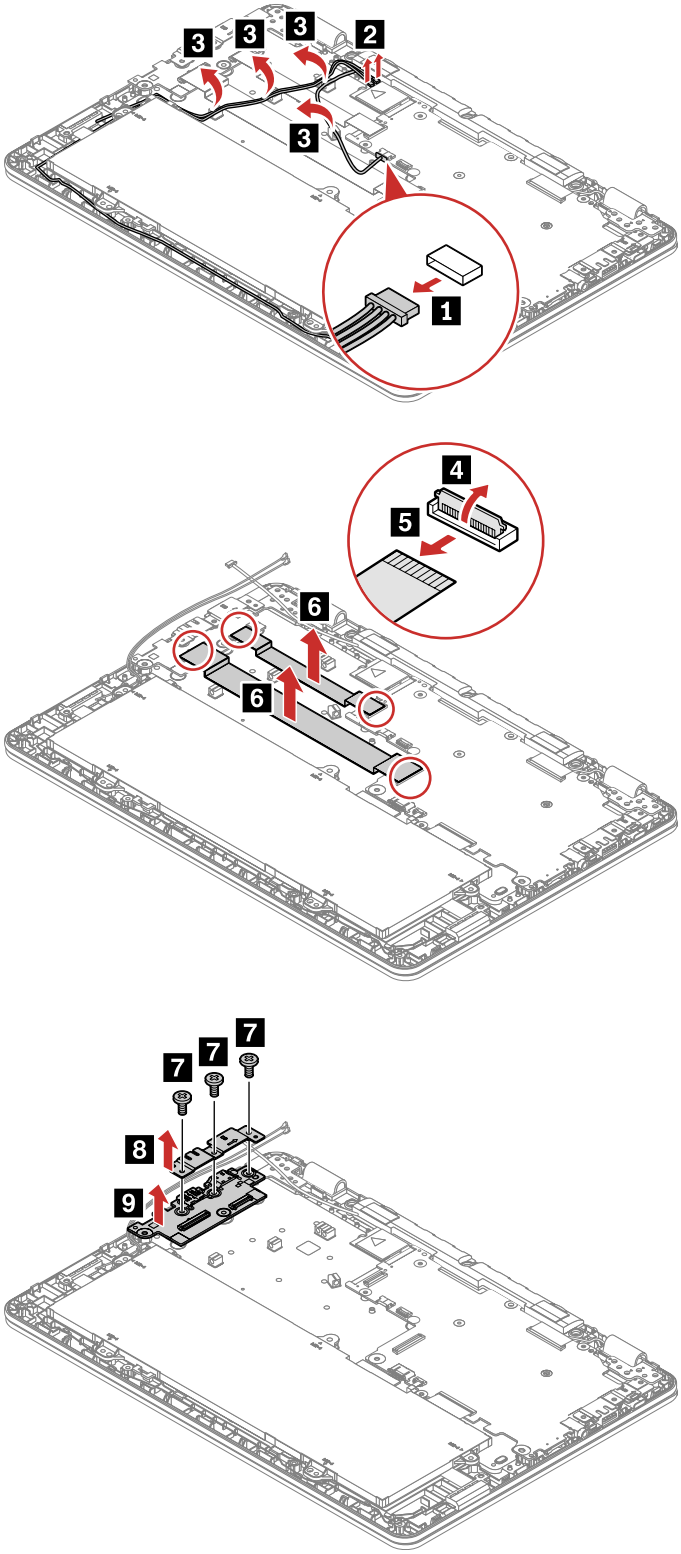

Screw (quantity)	Color
M2 × 4 mm, flat-head, nylon-coated (3)	Black

When installing: Ensure that the connector is attached firmly.

1060 Right I/O bracket

For access, remove these FRUs in order:
- “1010 Base cover assembly” on page 34

Removal steps of right I/O bracket

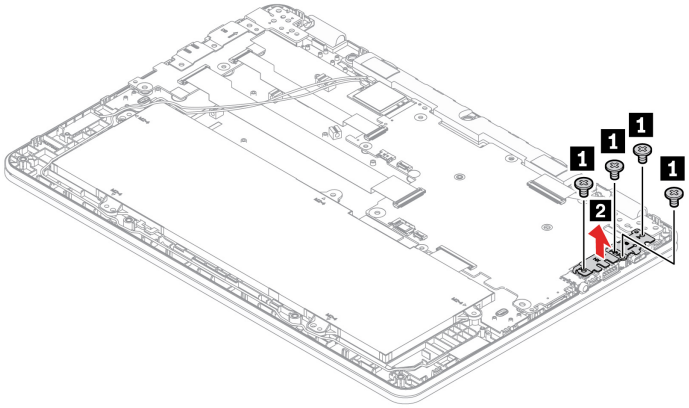

Screw (quantity)	Color
M2 × 4 mm, flat-head, nylon-coated (4)	Black

When installing: Ensure that the connector is attached firmly.

1070 Clickpad and clickpad cable

For access, remove these FRUs in order:
- “1010 Base cover assembly” on page 34
- “1020 Built-in battery” on page 35

Removal steps of the clickpad and clickpad cable

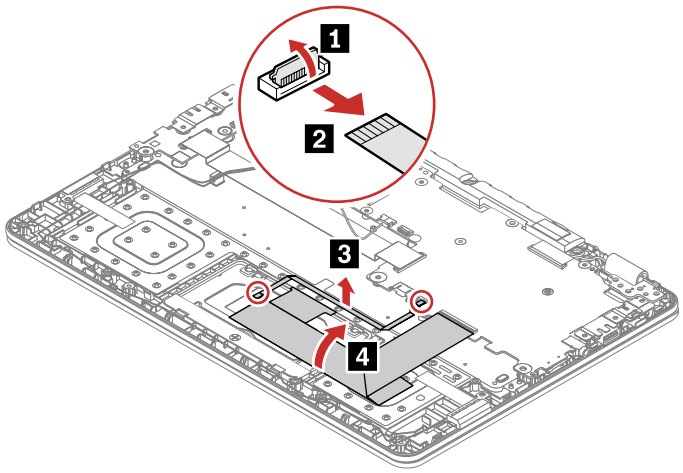

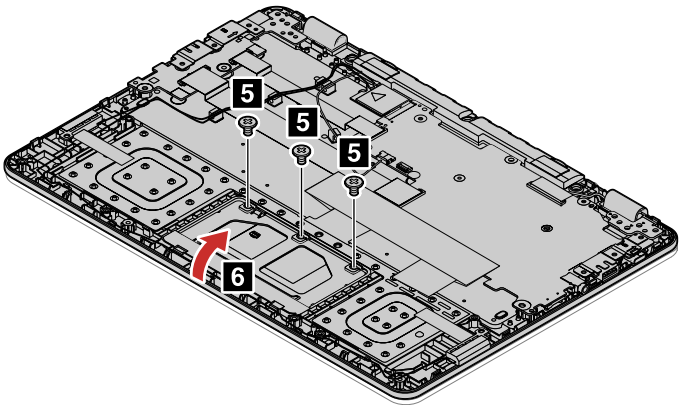

Screw (quantity)	Color
M1.6 × L1.8 mm, flat-head, nylon-coated (3)	Black

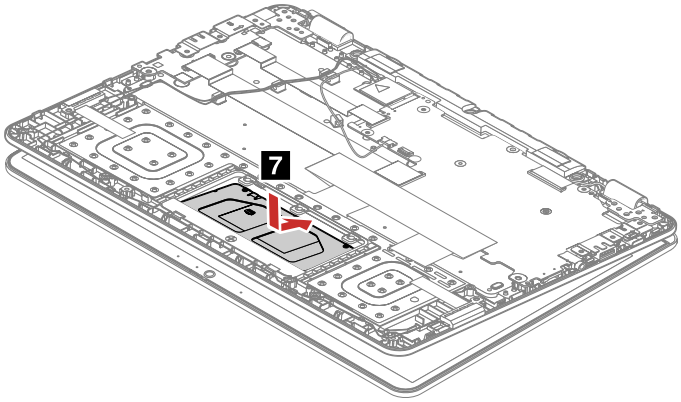

1080 Wireless LAN antenna

For access, remove these FRUs in order:

- “1010 Base cover assembly” on page 34
- “1020 Built-in battery” on page 35

Removal steps of the wireless LAN antenna

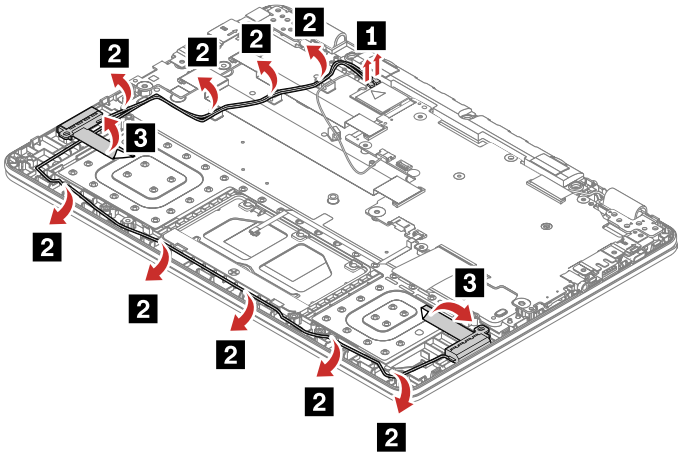

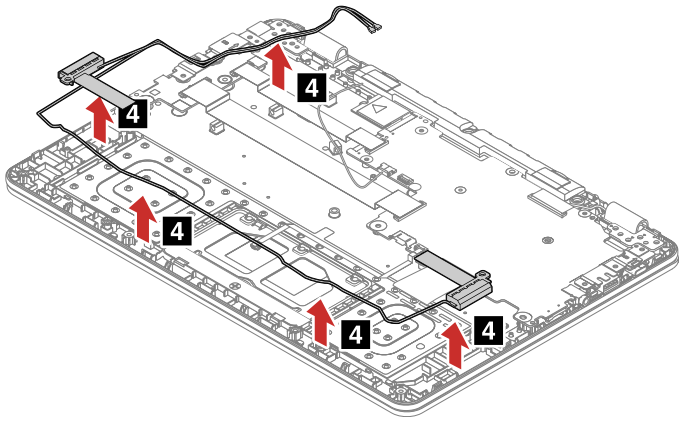

Wireless-LAN antenna location

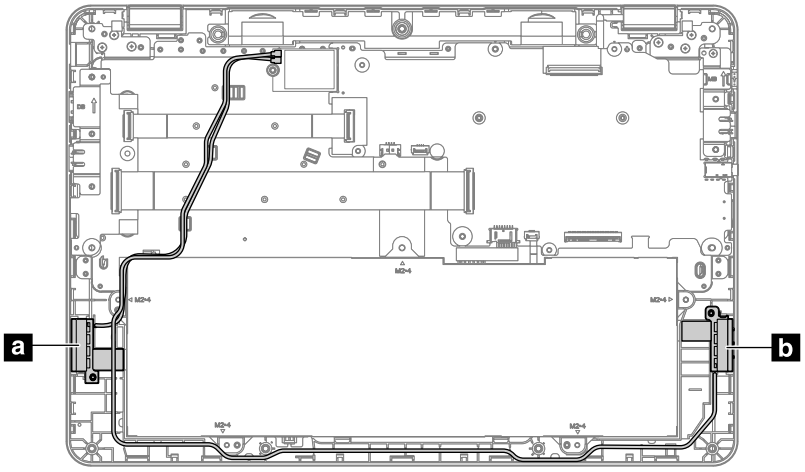

a Wireless-LAN main antenna

b Wireless-LAN auxiliary antenna

1090 LCD unit

For access, remove these FRUs in order:

- “1010 Base cover assembly” on page 34

Removal steps of the LCD unit

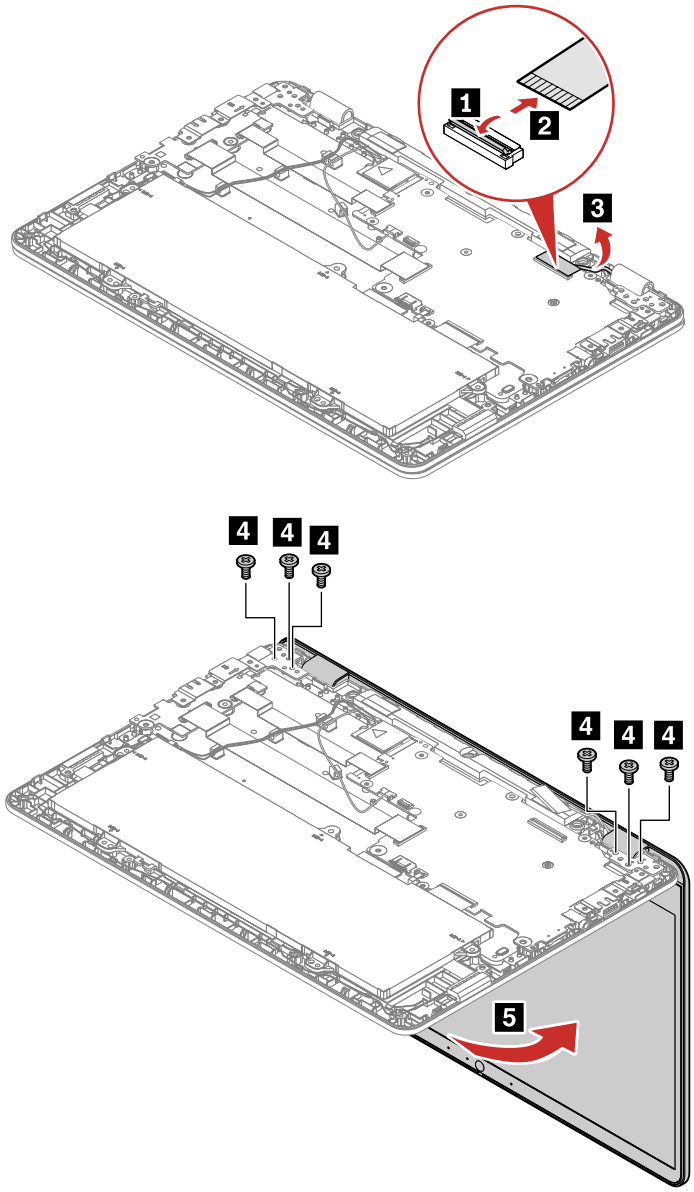

Screw (quantity)	Color
M2.5 × 5 mm, flat-head, nylon-coated (6)	Silver

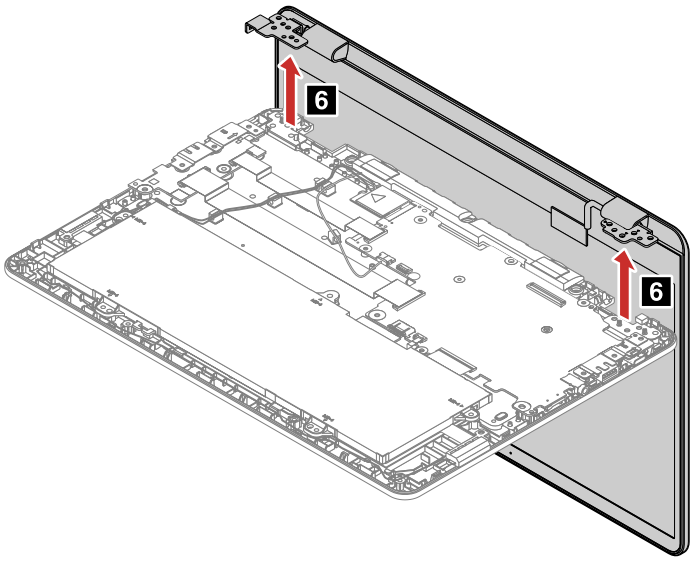

1110 System board

For access, remove these FRUs in order:

- “1010 Base cover assembly” on page 34
- “1020 Built-in battery” on page 35
- “1030 Wireless LAN card” on page 36
- “1060 Right I/O bracket” on page 39

Removal steps of the system board

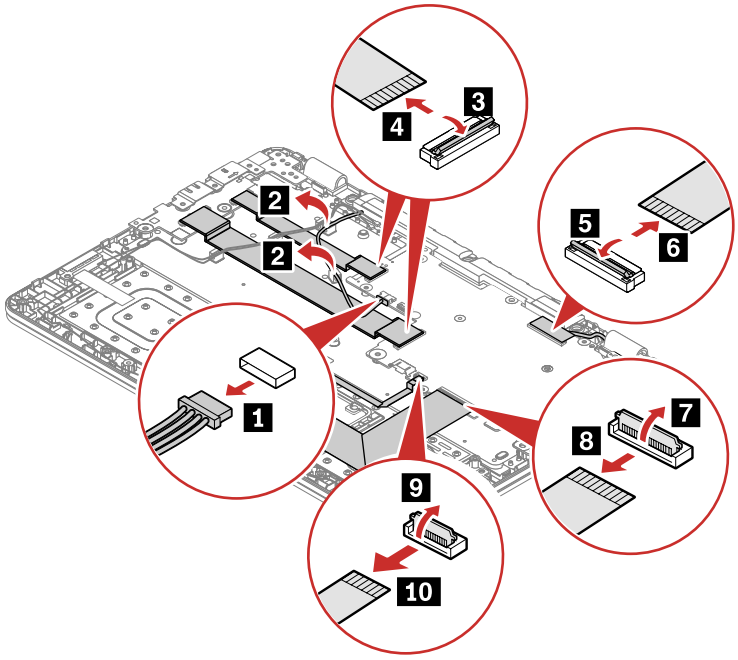

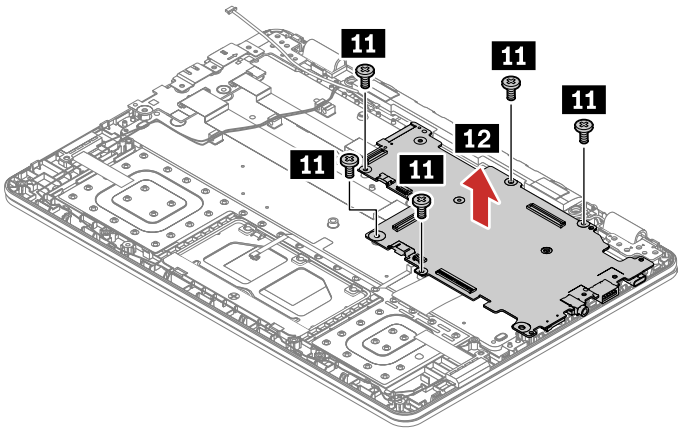

Screw (quantity)	Color
M2 × 4 mm, flat-head, nylon-coated (5)	Black

When installing: Ensure that the connectors are attached firmly.

1120 Heatsink

For access, remove these FRUs in order:

- “1010 Base cover assembly” on page 34
- “1020 Built-in battery” on page 35
- “1030 Wireless LAN card” on page 36
- “1060 Right I/O bracket” on page 39
- “1110 System board” on page 43

Removal steps of the heatsink

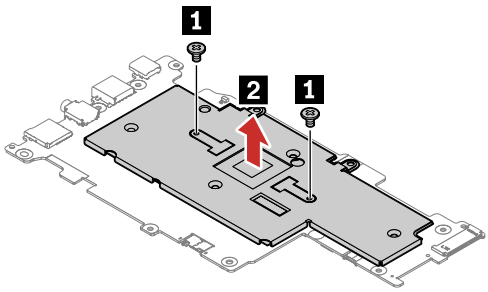

Screw (quantity)	Color
M2 × 3 mm, flat-head, nylon-coated (2)	Black

When installing: Ensure that the connectors are attached firmly.

1130 Keyboard assembly

For access, remove these FRUs in order:

“1010 Base cover assembly” on page 34

“1020 Built-in battery” on page 35

“1030 Wireless LAN card” on page 36

“1040 Speaker assembly” on page 37
“1050 Left I/O board, I/O bracket and I/O cables” on page 37
“1060 Right I/O bracket” on page 39
“1070 Clickpad and clickpad cable” on page 39
“1080 Wireless LAN antenna” on page 40
“1090 LCD unit” on page 41
“1110 System board” on page 43

Disassemble the LCD module

The LCD module as a whole is not a FRU. Instead, it contains FRUs as its components. Before disassembling the LCD module, make sure it has been detached from the base cover. Refer to “1090 LCD unit” on page 41 for instructions.

2010 LCD bezel

For access, remove this FRU:
- “1090 LCD unit” on page 41

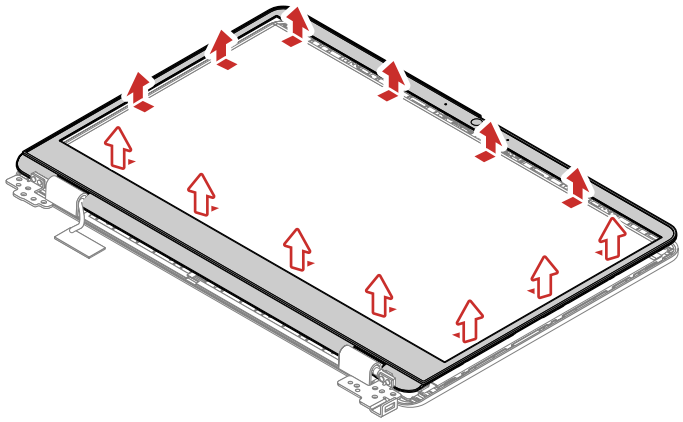

2020 LCD panel

For access, remove this FRU:
- “1090 LCD unit” on page 41
- “2010 LCD bezel” on page 45

Removal procedures

Pull out each tape slowly in the direction as shown until the adhesive tapes are all released from LCD unit.

Note: Do not pull the tapes too fast, otherwise, the tapes might snap.

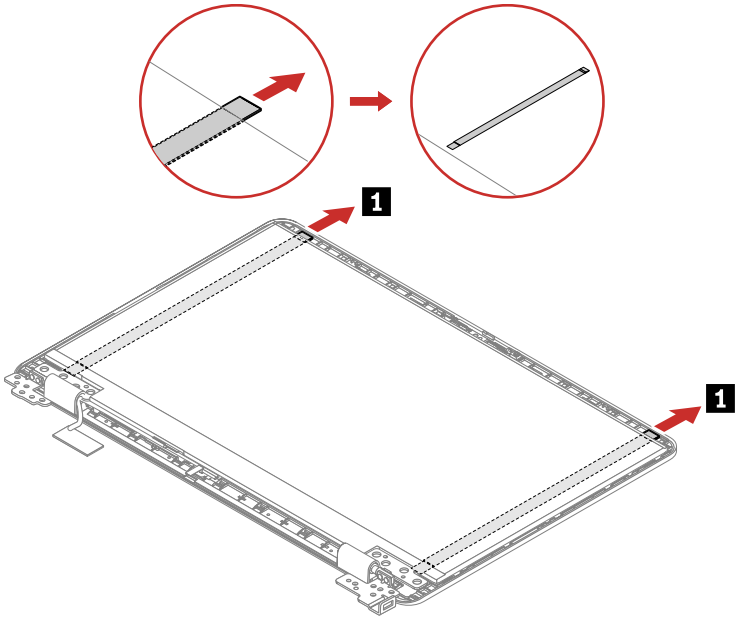

Turn over the LCD panel and detach the LCD cable from the LCD panel as shown.

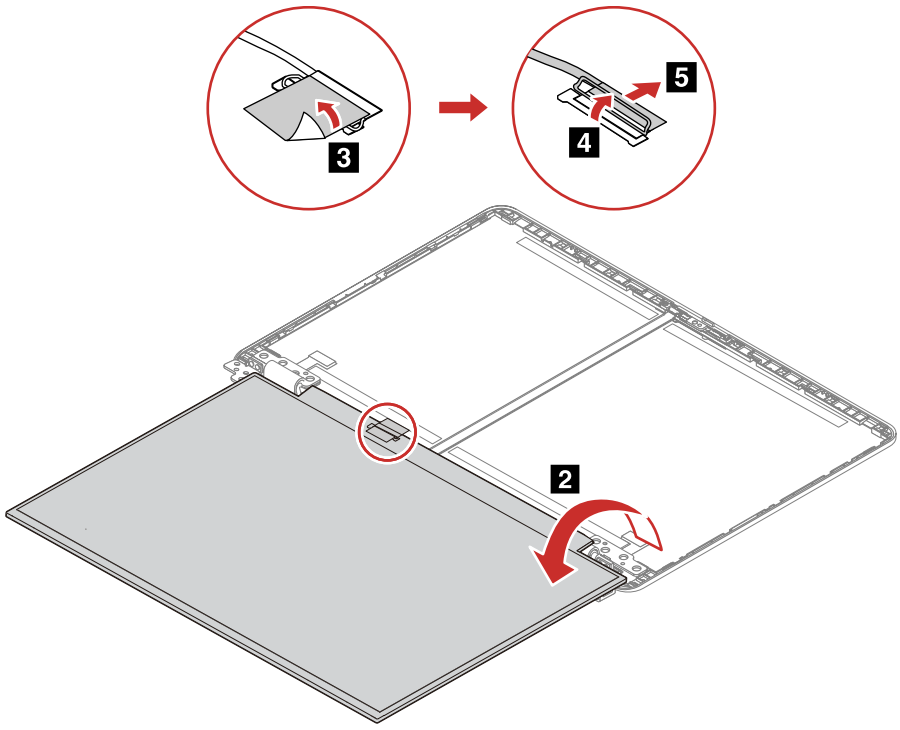

Installation procedures

Peel off the release liners from one side of the new elastic adhesive tapes. Apply the tapes to the correct locations. Peel off the release liners from the other side of the tapes. Ensure that two tapes are applied correctly as shown.

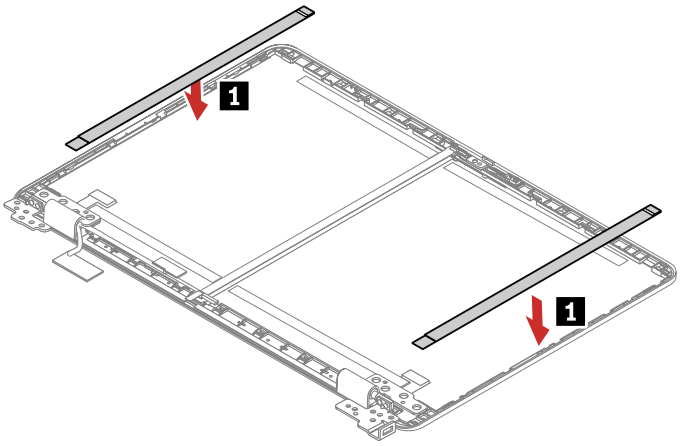

Attach the LCD cable to the LCD panel as shown. Turn over the LCD panel to secure the LCD panel with tapes.

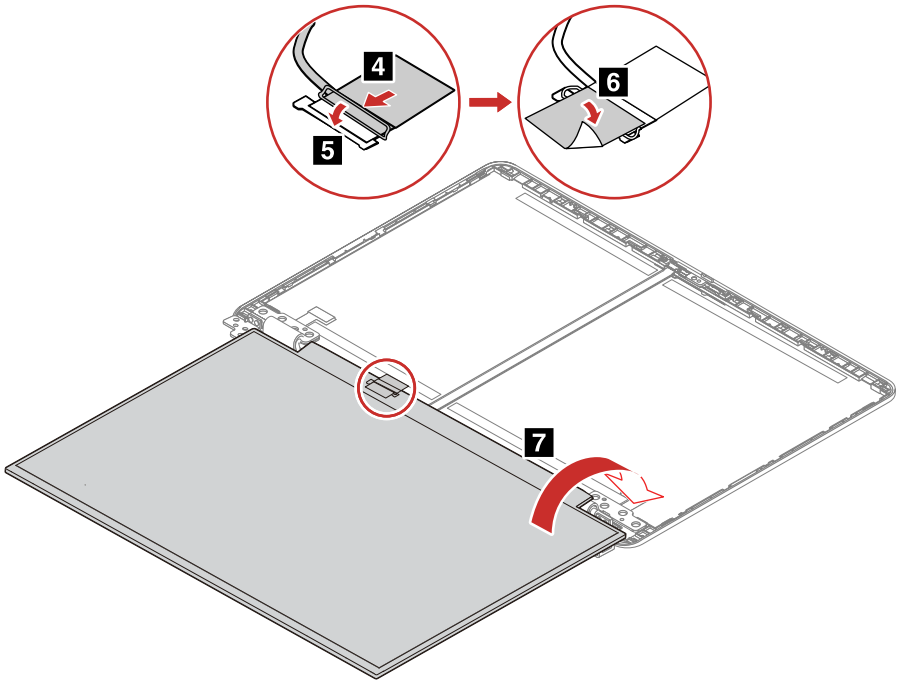

2030 Camera privacy shutter and camera board

For access, remove these FRUs:

- “1090 LCD unit” on page 41
- “2010 LCD bezel” on page 45
- “2020 LCD panel” on page 45

Removal steps of the camera privacy shutter and camera board

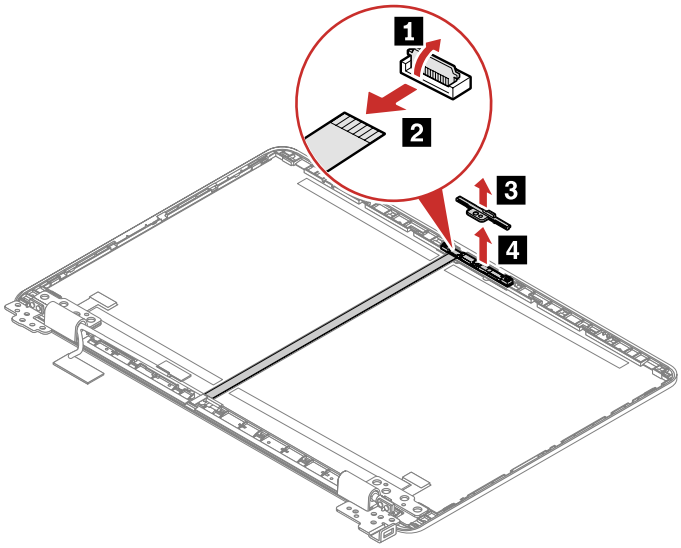

2040 LCD and camera cable

For access, remove these FRUs:
- “1090 LCD unit” on page 41
- “2010 LCD bezel” on page 45
- “2020 LCD panel” on page 45

Removal steps of the LCD and camera cable

Note: Ensure that you remove the left hinge cap before removing the LCD and camera cable.

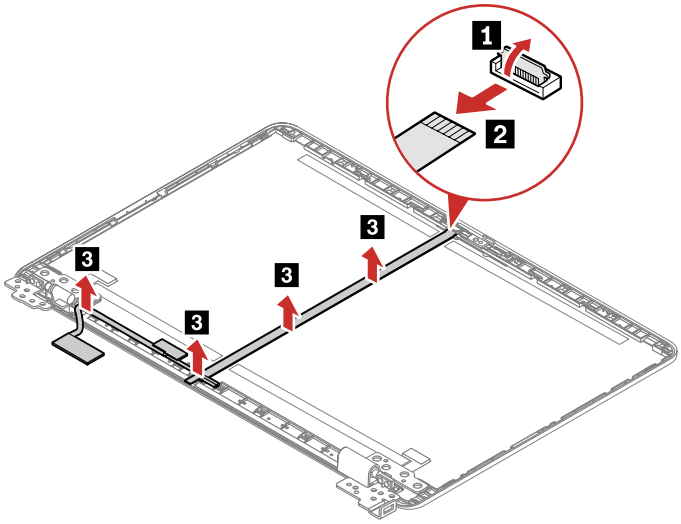

2050 LCD hinges

For access, remove these FRUs:
- “1090 LCD unit” on page 41
- “2010 LCD bezel” on page 45
- “2020 LCD panel” on page 45

Removal steps of the LCD hinges

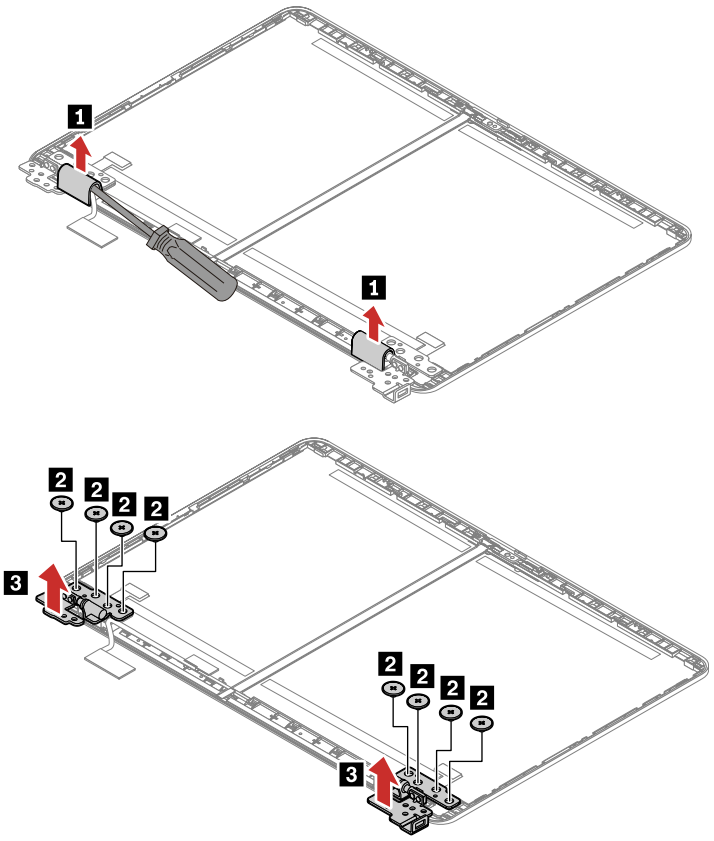

Screw (quantity)	Color
M2 × 2.5 mm, flat-head, nylon-coated (8)	Black

2060 LCD rear cover assembly

For access, remove these FRUs:

- “2010 LCD bezel” on page 45
- “2020 LCD panel” on page 45
- “2030 Camera privacy shutter and camera board ” on page 47
- “2040 LCD and camera cable” on page 48
- “2050 LCD hinges” on page 48

Appendix A. Controls, connectors, and indicators

Front



	Microphone		Camera
	Webcam privacy shutter		Touch screen

* for selected models

Webcam privacy shutter

Slide the webcam privacy shutter to cover or uncover the camera lens. It is designed to protect your privacy.

© Copyright Lenovo 2021

Base



	Speaker		Power button
	Touchpad		

Left



	USB-C® (3.2 Gen 1) power connector	SS	USB 3.2 connector Gen 1
	Audio connector	microSD	microSD-card slot

Right



SS	USB 3.2 connector Gen 1	HDMI	HDMI™ connector
	Security-lock slot		

Appendix B. Notices

Lenovo may not offer the products, services, or features discussed in this document in all countries. Consult your local Lenovo representative for information on the products and services currently available in your area. Any reference to a Lenovo product, program, or service is not intended to state or imply that only that Lenovo product, program, or service may be used. Any functionally equivalent product, program, or service that does not infringe any Lenovo intellectual property right may be used instead. However, it is the user's responsibility to evaluate and verify the operation of any other product, program, or service.

Lenovo may have patents or pending patent applications covering subject matter described in this document. The furnishing of this document does not give you any license to these patents. You can send license inquiries, in writing, to:

Lenovo (United States), Inc.
8001 Development Drive
Morrisville, NC 27560
U.S.A.
Attention: Lenovo Director of Licensing

LENOVO PROVIDES THIS PUBLICATION "AS IS" WITHOUT WARRANTY OF ANY KIND, EITHER EXPRESS OR IMPLIED, INCLUDING, BUT NOT LIMITED TO, THE IMPLIED WARRANTIES OF NON-INFRINGEMENT, MERCHANTABILITY OR FITNESS FOR A PARTICULAR PURPOSE. Some jurisdictions do not allow disclaimer of express or implied warranties in certain transactions, therefore, this statement may not apply to you.

This information could include technical inaccuracies or typographical errors. Changes are periodically made to the information herein; these changes will be incorporated in new editions of the publication. Lenovo may make improvements and/or changes in the product(s) and/or the program(s) described in this publication at any time without notice.

The products described in this document are not intended for use in implantation or other life support applications where malfunction may result in injury or death to persons. The information contained in this document does not affect or change Lenovo product specifications or warranties. Nothing in this document shall operate as an express or implied license or indemnity under the intellectual property rights of Lenovo or third parties. All information contained in this document was obtained in specific environments and is presented as an illustration. The result obtained in other operating environments may vary.

Lenovo may use or distribute any of the information you supply in any way it believes appropriate without incurring any obligation to you.

Any references in this publication to non-Lenovo Web sites are provided for convenience only and do not in any manner serve as an endorsement of those Web sites. The materials at those Web sites are not part of the materials for this Lenovo product, and use of those Web sites is at your own risk.

Any performance data contained herein was determined in a controlled environment. Therefore, the result obtained in other operating environments may vary significantly. Some measurements may have been made on development-level systems and there is no guarantee that these measurements will be the same on generally available systems. Furthermore, some measurements may have been estimated through extrapolation. Actual results may vary. Users of this document should verify the applicable data for their specific environment.

© Copyright Lenovo 2021

Electromagnetic emission notices

For electromagnetic emission information on Class B digital devices, refer to the corresponding information in the *User Guide*.

CE

EU Contact: Lenovo (Slovakia), Landererova 12, 811 09 Bratislava, Slovakia

Trademarks

LENOVO and the LENOVO logo are trademarks of Lenovo. The terms HDMI and HDMI High-Definition Multimedia Interface are trademarks or registered trademarks of HDMI Licensing LLC in the United States and other countries. USB-C is a trademark of USB Implementers Forum. All other trademarks are the property of their respective owners. © 2021 Lenovo.



Part Number: SP40K06268

Printed in China

(1P) P/N: SP40K06268

