Lenovo E41-55
Hardware Maintenance Manual



Third Edition (February 2023)

© Copyright Lenovo 2020, 20223.

Contents

About this manual iii

Chapter 1. Safety information 1

General safety 1
Electrical safety 1
Safety inspection guide 2
Handling devices that are sensitive to electrostatic discharge 3
Grounding requirements 4
Safety notices (multilingual translations) 4

Chapter 2. General checkout 19

What to do first 19
Checking the ac power adapter 20
Checking the battery and operational charging . . 20

Chapter 3. Locating computer controls, connectors, and indicators 23

Front 23
Base 24
Left 25
Right 26

Chapter 4. FRU replacement notices 27

Service tool kit 27
Screw notices 27

Chapter 5. Identifying FRUs (CRUs) 29

Major FRUs and CRUs 29

Chapter 6. Removing a FRU or CRU 33

General guidelines 33
Remove the lower case 33
Remove the hard disk drive and hard disk drive bracket 34
Remove the memory module bracket and memory DIMM 35
Remove the M.2 2280 solid-state drive (for selected models) 36
Remove the M.2 2242 solid-state drive (for selected models) 36
Remove the heat sink 37
Remove the thermal fan 38
Remove the CMOS battery 38
Remove the built in battery 39
Remove the fingerprint reader cable, fingerprint reader and fingerprint reader bracket 40
Remove the Wireless LAN card 41
Remove the speakers 42
Remove the DC-in cable 42
Remove the LCD unit 43
Remove the system board 45
Remove the upper case (with keyboard and touch pad) 47
Disassemble the LCD module 48
    Remove the LCD bezel 48
    Remove the LCD panel 48
    Remove the hinges and LCD cable 50
    Remove the camera cable 51
    Remove the camera board 52
    Remove the LCD cover 53
Trademarks Iv

© Copyright Lenovo 2020, 20223

About this manual

This manual contains service and reference information for the following Lenovo® products.

Product name	Machine type (MT)
Lenovo E41–55	82FJ, 82FK*, 83C1 and 83C2*

* for mainland China

Use this manual along with the advanced diagnostic tests to troubleshoot problems.

Important: This manual is intended only for trained service technicians who are familiar with ThinkPad products. Use this manual along with the advanced diagnostic tests to troubleshoot problems effectively. Before servicing a product, be sure to read all the information under Chapter 1 “Safety information” on page 1.

© Copyright Lenovo 2020, 20223

Chapter 1. Safety information

This chapter presents the following safety information that you need to be familiar with before you service a Lenovo notebook computer.

General safety

Follow these rules to ensure general safety:

- Observe good housekeeping in the area of the machines during and after maintenance.
- When lifting any heavy object:
  1. Make sure that you can stand safely without slipping.
  2. Distribute the weight of the object equally between your feet.
  3. Use a slow lifting force. Never move suddenly or twist when you attempt to lift.
  4. Lift by standing or by pushing up with your leg muscles; this action removes the strain from the muscles in your back. *Do not attempt to lift any object that weighs more than 16 kg (35 lb) or that you think is too heavy for you.*
- Do not perform any action that causes hazards to the customer, or that makes the equipment unsafe.
- Before you start the machine, make sure that other service technicians and the customer's personnel are not in a hazardous position.
- Place removed covers and other parts in a safe place, away from all personnel, while you are servicing the machine.
- Keep your tool case away from walk areas so that other people will not trip over it.
- Do not wear loose clothing that can be trapped in the moving parts of a machine. Make sure that your sleeves are fastened or rolled up above your elbows. If your hair is long, fasten it.
- Insert the ends of your necktie or scarf inside clothing or fasten it with a non-conductive clip, about 8 centimeters (3 inches) from the end.
- Do not wear jewelry, chains, metal-frame eyeglasses, or metal fasteners for your clothing.

  Attention: Metal objects are good electrical conductors.
- Wear safety glasses when you are hammering, drilling, soldering, cutting wire, attaching springs, using solvents, or working in any other conditions that might be hazardous to your eyes.
- After service, reinstall all safety shields, guards, labels, and ground wires. Replace any safety device that is worn or defective.
- Reinstall all covers correctly before returning the machine to the customer.
- Fan louvers on the machine help to prevent overheating of internal components. Do not obstruct fan louvers or cover them with labels or stickers.

Electrical safety

Observe the following rules when working on electrical equipment.

Important: Use only approved tools and test equipment. Some hand tools have handles covered with a soft material that does not insulate you when working with live electrical currents.Many customers have, near their equipment, rubber floor mats that contain small conductive fibers to decrease electrostatic discharges. Do not use this type of mat to protect yourself from electrical shock.

- Find the room emergency power-off (EPO) switch, disconnecting switch, or electrical outlet. If an electrical accident occurs, you can then operate the switch or unplug the power cord quickly.
- Do not work alone under hazardous conditions or near equipment that has hazardous voltages.
- Disconnect all power before:
  - Performing a mechanical inspection
  - Working near power supplies

© Copyright Lenovo 2020, 20223

  - Removing or installing main units
- Before you start to work on the machine, unplug the power cord. If you cannot unplug it, ask the customer to power-off the wall box that supplies power to the machine, and to lock the wall box in the off position.
- If you need to work on a machine that has *exposed* electrical circuits, observe the following precautions:
  - Ensure that another person, familiar with the power-off controls, is near you.

    Attention: Another person must be there to switch off the power, if necessary.
  - Use only one hand when working with powered-on electrical equipment; keep the other hand in your pocket or behind your back.

    Attention: An electrical shock can occur only when there is a complete circuit. By observing the above rule, you may prevent a current from passing through your body.
  - When using testers, set the controls correctly and use the approved probe leads and accessories for that tester.
  - Stand on suitable rubber mats (obtained locally, if necessary) to insulate you from grounds such as metal floor strips and machine frames.

  Observe the special safety precautions when you work with very high voltages; Instructions for these precautions are in the safety sections of maintenance information. Use extreme care when measuring high voltages.
- Regularly inspect and maintain your electrical hand tools for safe operational condition.
- Do not use worn or broken tools and testers.
- *Never assume* that power has been disconnected from a circuit. First, *check* that it has been powered off.
- Always look carefully for possible hazards in your work area. Examples of these hazards are moist floors, non-grounded power extension cables, power surges, and missing safety grounds.
- Do not touch live electrical circuits with the reflective surface of a plastic dental mirror. The surface is conductive; such touching can cause personal injury and machine damage.
- Do not service the following parts *with the power on* when they are removed from their normal operating places in a machine:
  - Power supply units
  - Pumps
  - Blowers and fans
  - Motor generators
  - Similar units as listed above

  This practice ensures correct grounding of the units.
- If an electrical accident occurs:
  - Use caution; do not become a victim yourself.
  - Switch off power.
  - Send another person to get medical aid.

Safety inspection guide

The purpose of this inspection guide is to assist you in identifying potentially unsafe conditions. As each machine was designed and built, required safety items were installed to protect users and service technicians from injury. This guide addresses only those items. You should use good judgment to identify potential safety hazards due to attachment of non-Lenovo features or options not covered by this inspection guide.

If any unsafe conditions are present, you must determine how serious the apparent hazard could be and whether you can continue without first correcting the problem.

Consider these conditions and the safety hazards they present:
- Electrical hazards, especially primary power (primary voltage on the frame can cause serious or fatal electrical shock)
- Explosive hazards, such as a damaged cathode ray tube (CRT) face or a bulging capacitor
- Mechanical hazards, such as loose or missing hardware

To determine whether there are any potentially unsafe conditions, use the following checklist at the beginning of every service task. Begin the checks with the power off, and the power cord disconnected.

Checklist:

1. Check exterior covers for damage (loose, broken, or sharp edges).
2. Power off the computer. Disconnect the power cord.
3. Check the power cord for:
   a. A third-wire ground connector in good condition. Use a meter to measure third-wire ground continuity for 0.1 ohm or less between the external ground pin and the frame ground.
   b. The power cord should be the authorized type specified for your computer. Go to: http://www.lenovo.com/serviceparts-lookup
   c. Insulation must not be frayed or worn.
4. Check for cracked or bulging batteries.
5. Remove the cover.
6. Check for any obvious non-Lenovo alterations. Use good judgment as to the safety of any non-Lenovo alterations.
7. Check inside the unit for any obvious unsafe conditions, such as metal filings, contamination, water or other liquids, or signs of fire or smoke damage.
8. Check for worn, frayed, or pinched cables.
9. Check that the power-supply cover fasteners (screws or rivets) have not been removed or tampered with.

Handling devices that are sensitive to electrostatic discharge

Any computer part containing transistors or integrated circuits (ICs) should be considered sensitive to electrostatic discharge (ESD). ESD damage can occur when there is a difference in charge between objects. Protect against ESD damage by equalizing the charge so that the machine, the part, the work mat, and the person handling the part are all at the same charge.

Notes:

1. Use product-specific ESD procedures when they exceed the requirements noted here.
2. Make sure that the ESD protective devices you use have been certified (ISO 9000) as fully effective.

When handling ESD-sensitive parts:

- Keep the parts in protective packages until they are inserted into the product.
- Avoid contact with other people.
- Wear a grounded wrist strap against your skin to eliminate static on your body.
- Prevent the part from touching your clothing. Most clothing is insulative and retains a charge even when you are wearing a wrist strap.
- Use a grounded work mat to provide a static-free work surface. The mat is especially useful when handling ESD-sensitive devices.
- Select a grounding system, such as those listed below, to provide protection that meets the specific service requirement.

  Note: The use of a grounding system to guard against ESD damage is desirable but not necessary.
  - Attach the ESD ground clip to any frame ground, ground braid, or green-wire ground.
  - When working on a double-insulated or battery-operated system, use an ESD common ground or reference point. You can use coax or connector-outside shells on these systems.
  - Use the round ground prong of the ac plug on ac-operated computers.

Grounding requirements

Electrical grounding of the computer is required for operator safety and correct system function. Proper grounding of the electrical outlet can be verified by a certified electrician.

Safety notices (multilingual translations)

The safety notices in this section are provided in the following languages:

- English
- Arabic
- Brazilian Portuguese
- French
- German
- Hebrew
- Japanese
- Korean
- Spanish
- Traditional Chinese



Before the computer is powered on after FRU replacement, make sure that all screws, springs, and other small parts are in place and are not left loose inside the computer. Verify this by shaking the computer and listening for rattling sounds. Metallic parts or metal flakes can cause electrical short circuits.

DANGER



Some standby batteries contain a small amount of nickel and cadmium. Do not disassemble a standby battery, recharge it, throw it into fire or water, or short-circuit it. Dispose of the battery as required by local ordinances or regulations. Use only the battery in the appropriate parts listing. Use of an incorrect battery can result in ignition or explosion of the battery.

DANGER



The battery pack contains small amounts of nickel. Do not disassemble it, throw it into fire or water, or short-circuit it. Dispose of the battery pack as required by local ordinances or regulations. Use only the battery in the appropriate parts listing when replacing the battery pack. Use of an incorrect battery can result in ignition or explosion of the battery.

DANGER



The lithium battery can cause a fire, an explosion, or a severe burn. Do not recharge it, remove its polarized connector, disassemble it, heat it above 100°C (212°F), incinerate it, or expose its cell contents to water. Dispose of the battery as required by local ordinances or regulations. Use only the battery in the appropriate parts listing. Use of an incorrect battery can result in ignition or explosion of the battery.

DANGER



If the LCD breaks and the fluid from inside the LCD gets into your eyes or on your hands, immediately wash the affected areas with water for at least 15 minutes. Seek medical care if any symptoms from the fluid are present after washing.

DANGER



To avoid shock, do not remove the plastic cover that protects the lower part of the inverter card.

DANGER



Though the main batteries have low voltage, a short-circuited or grounded battery can produce enough current to burn personnel or combustible materials.

DANGER



Unless hot swap is allowed for the FRU being replaced, do as follows before removing it: power off the computer, unplug all power cords from electrical outlets, remove the battery pack, and disconnect any interconnecting cables.

DANGER



خطر

قبل اعادة تشغيل الحاسب بعد الانتهاء من استبدال FRU، تأكد من أنه قد تم اعادة كل من المسامير و السوست وكل الأجزاء الصغيرة الأخرى في أماكنهم ولم يتم فقدهم داخل الحاسب.
ويمكن التحقق من ذلك عن طريق هز الحاسب والاستماع لأي صوت صاخب يصدر منه.
قد تؤدي الأجزاء أو الرقائق المعدنية الى حدوث دائرة قصر.



خطر

تحتوي بعض البطاريات الاحتياطية على كمية صغيرة من مادتي النيكل والكادميوم. لا تقم بفك أو اعادة شحن البطارية الاحتياطية ولا تقم أيضا بالقاءها في النار أو الماء ولا تتسبب في احداث دائرة قصر بها. قم بالتخلص من البطارية كما هو موضح في القوانين المحلية. استخدم نوع البطارية المحدد والذي يوصى باستخدامه. حيث أنه قد يؤدي استخدام نوع بطارية غير صحيح الى اشتعالها أو انفجارها.



خطر

تحتوي حزمة البطارية على كمية صغيرة من مادة النيكل. لا تقم بفكها أو القاءها في النار أو الماء ولا تتسبب في احداث دائرة قصر بها. تخلص من حزمة البطارية وفقا لما هو موضح في القوانين المحلية. قم، عند استبدال حزمة البطارية، باستخدام الأنواع المحددة فقط والتي يوصى باستخدامها. حيث أنه قد يؤدي استخدام نوع بطارية غير صحيح الى اشتعالها أو انفجارها.



خطر

قد تتسبب بطارية الليثيوم في حدوث حريق أو انفجار أو حدوث حروق شديدة. لا تقم باعادة شحن البطارية أو ازالة موصل الاستقطاب الخاص بها ولا تحاول أيضا فكها أو تسخينها لأكثر من ١٠٠ درجة منوية (٢١٢ فهرنهايت) أو حرقها أو تعريض محتويات الخانة الخاصة بها للماء. قم بالتخلص من البطارية وفقا لما هو موضح في القوانين المحلية. استخدم نوع البطارية المحدد والذي يوصى باستخدامه. حيث أنه قد يؤدي استخدام نوع بطارية غير صحيح الى اشتعالها أو انفجارها.



خطر

اذا ما انكسرت شاشة LCD ولامس السائل الداخلي عينيك أو يديك، قم في الحال بغسلهما بالماء لمدة لا تقل عن ١٥ دقيقة. اذا ما وجدت أي أعراض بعد الغسل اطلب عندئذ المساعدة الطبية.



خطر

لتجنب التعرض لأي صدمات، لا تقم بازالة الغطاء البلاستيكي الذي يحمي الجزء الأسفل من بطاقة العاكس.



خطر

على الرغم من أن البطاريات الرئيسية يكون لها جهد منخفض، الا أنه قد تقوم البطاريات التي حدث قصور بها أو التي تم توصيلها أرضيا باصدار تيار يكفي لحدوث حروق للأفراد أو تعرض المواد القابلة للاشتعال للحريق.



خطر

ما لم يتم السماح بالتبديل الفوري لأي FRU الجاري استبداله بدون ضرورة اغلاق النظام، قم
بتنفيذ ما يلي قبل ازالته. قم بايقاف تشغيل الحاسب ونزع كل أسلاك الطاقة من المخارج الكهربائية
وقم أيضا بازالة حزمة البطارية ثم قم بفصل أي كابلات متصلة.



PERIGO

Antes de ligar o computador após a substituição da FRU, certifique-se de que todos os parafusos, molas e outras peças pequenas estejam no lugar e não estejam soltos dentro do computador. Verifique isso sacudindo o computador e procurando ouvir sons de peças soltas. Peças metálicas ou lascas de metal podem causar curto-circuito.



PERIGO

Algumas baterias reserva contêm uma pequena quantidade de níquel e cádmio. Não desmonte uma bateria reserva, recarregue-a, jogue-a no fogo ou na água, ou deixe-a entrar em curto-circuito. Descarte a bateria conforme requerido pelas leis ou regulamentos locais. Use somente a bateria nas partes listadas apropriadas. O uso de uma bateria incorreta pode resultar em combustão ou explosão da bateria.



PERIGO

O pacote da bateria contém uma pequena quantidade de níquel. Não o desmonte, jogue-o no fogo ou na água, ou deixe-o entrar em curto-circuito. Descarte o pacote da bateria conforme requerido pelas leis ou regulamentos locais. Use somente a bateria nas partes listadas apropriadas ao substituir o pacote da bateria. O uso de uma bateria incorreta pode resultar em combustão ou explosão da bateria.



PERIGO

A bateria de lítio pode causar incêndio, explosão ou graves queimaduras. Não a recarregue, remova seu conector polarizado, desmonte-a, aqueça-a acima de 100°C (212°F), incinere-a, ou exponha o conteúdo de sua célula à água. Descarte a bateria conforme requerido pelas leis ou regulamentos locais. Use somente a bateria nas partes listadas apropriadas. O uso de uma bateria incorreta pode resultar em combustão ou explosão da bateria.



PERIGO

Se o LCD quebrar e o fluido de dentro dele entrar em contato com seus olhos ou com suas mãos, lave as áreas afetadas imediatamente com água durante pelo menos 15 minutos. Procure cuidados médicos se algum sintoma causado pelo fluido surgir após a lavagem.



PERIGO

Para evitar choque elétrico, não remova a capa plástica que protege a parte inferior da placa inversora.



PERIGO

Embora as principais baterias possuam baixa voltagem, uma bateria em curto-circuito ou aterrada pode produzir corrente o bastante para queimar materiais de pessoal ou inflamáveis.



PERIGO

A menos que uma hot swap seja permitida para a FRU que está sendo substituída, faça o seguinte antes de removê-la: desligue o computador, desconecte todos os cabos de energia das tomadas, remova o pacote de baterias e desconecte quaisquer cabos de interconexão.



DANGER

Avant de remettre l'ordinateur sous tension après remplacement d'une unité en clientèle, vérifiez que tous les ressorts, vis et autres pièces sont bien en place et bien fixées. Pour ce faire, secouez l'unité et assurez-vous qu'aucun bruit suspect ne se produit. Des pièces métalliques ou des copeaux de métal pourraient causer un court-circuit.



DANGER

Certaines batteries de secours contiennent du nickel et du cadmium. Ne les démontez pas, ne les rechargez pas, ne les exposez ni au feu ni à l'eau. Ne les mettez pas en court-circuit. Pour les mettre au rebut, conformez-vous à la réglementation en vigueur. Lorsque vous remplacez la pile de sauvegarde ou celle de l'horloge temps réel, veillez à n'utiliser que les modèles cités dans la liste de pièces détachées adéquate. Une batterie ou une pile inappropriée risque de prendre feu ou d'exploser.



DANGER

La batterie contient du nickel. Ne la démontez pas, ne l'exposez ni au feu ni à l'eau. Ne la mettez pas en court-circuit. Pour la mettre au rebut, conformez-vous à la réglementation en vigueur. Lorsque vous remplacez la batterie, veillez à n'utiliser que les modèles cités dans la liste de pièces détachées adéquate. En effet, une batterie inappropriée risque de prendre feu ou d'exploser.



DANGER

La pile de sauvegarde contient du lithium. Elle présente des risques d'incendie, d'explosion ou de brûlures graves. Ne la rechargez pas, ne retirez pas son connecteur polarisé et ne la démontez pas. Ne l'exposez pas à une temperature supérieure à 100°C, ne la faites pas brûler et n'en exposez pas le contenu à l'eau. Mettez la pile au rebut conformément à la réglementation en vigueur. Une pile inappropriée risque de prendre feu ou d'exploser.



DANGER

Si le panneau d'affichage à cristaux liquides se brise et que vous recevez dans les yeux ou sur les mains une partie du fluide, rincez-les abondamment pendant au moins quinze minutes. Consultez un médecin si des symptômes persistent après le lavage.



DANGER

Afin d'éviter tout risque de choc électrique, ne retirez pas le cache en plastique protégeant la partie inférieure de la carte d'alimentation.



DANGER

Bien que le voltage des batteries principales soit peu élevé, le court-circuit ou la mise à la masse d'une batterie peut produire suffisamment de courant pour brûler des matériaux combustibles ou causer des brûlures corporelles graves.



DANGER

Si le remplacement à chaud n'est pas autorisé pour l'unité remplaçable sur site que vous remplacez, procédez comme suit avant de retirer l'unité : mettez l'ordinateur hors tension, débranchez tous les cordons d'alimentation des prises de courant, retirez le bloc de batterie et déconnectez tous les câbles d'interconnexion.



VORSICHT

Bevor nach einem FRU-Austausch der Computer wieder angeschlossen wird, muß sichergestellt werden, daß keine Schrauben, Federn oder andere Kleinteile fehlen oder im Gehäuse vergessen wurden. Der Computer muß geschüttelt und auf Klappergeräusche geprüft werden. Metallteile oder-splitter können Kurzschlüsse erzeugen.



VORSICHT

Die Bereitschaftsbatterie, die sich unter dem Diskettenlaufwerk befindet, kann geringe Mengen Nickel und Cadmium enthalten. Sie darf nur durch die Verkaufsstelle oder den IBM Kundendienst ausgetauscht werden. Sie darf nicht zerlegt, wiederaufgeladen, kurzgeschlossen, oder Feuer oder Wasser ausgesetzt werden. Die Batterie kann schwere Verbrennungen oder Verätzungen verursachen. Bei der Entsorgung die örtlichen Bestimmungen für Sondermüll beachten. Beim Ersetzen der Bereitschafts-oder Systembatterie nur Batterien des Typs verwenden, der in der Ersatzteilliste aufgeführt ist. Der Einsatz falscher Batterien kann zu Entzündung oder Explosion führen.



VORSICHT

Akkus enthalten geringe Mengen von Nickel. Sie dürfen nicht zerlegt, wiederaufgeladen, kurzgeschlossen, oder Feuer oder Wasser ausgesetzt werden. Bei der Entsorgung die örtlichen Bestimmungen für Sondermüll beachten. Beim Ersetzen der Batterie nur Batterien des Typs verwenden, der in der Ersatzteilliste aufgeführt ist. Der Einsatz falscher Batterien kann zu Entzündung oder Explosion führen.



VORSICHT

Die Systembatterie ist eine Lithiumbatterie. Sie kann sich entzünden, explodieren oder schwere Verbrennungen hervorrufen. Batterien dieses Typs dürfen nicht aufgeladen, zerlegt, über 100°C erhitzt oder verbrannt werden. Auch darf ihr Inhalt nicht mit Wasser in Verbindung gebracht oder der zur richtigen Polung angebrachte Verbindungsstecker entfernt werden. Bei der Entsorgung die örtlichen Bestimmungen für Sondermüll beachten. Beim Ersetzen der Batterie nur Batterien des Typs verwenden, der in der Ersatzteilliste aufgeführt ist. Der Einsatz falscher Batterien kann zu Entzündung oder Explosion führen.



VORSICHT

Die Leuchtstoffröhre im LCD-Bildschirm enthält Quecksilber. Bei der Entsorgung die örtlichen Bestimmungen für Sondermüll beachten. Der LCD-Bildschirm besteht aus Glas und kann zerbrechen, wenn er unsachgemäß behandelt wird oder der Computer auf den Boden fällt. Wenn der Bildschirm beschädigt ist und die darin befindliche Flüssigkeit in Kontakt mit Haut und Augen gerät, sollten die betroffenen Stellen mindestens 15 Minuten mit Wasser abgespült und bei Beschwerden anschließend ein Arzt aufgesucht werden.



VORSICHT

Aus Sicherheitsgründen die Kunststoffabdeckung, die den unteren Teil der Spannungswandlerplatine umgibt, nicht entfernen.



VORSICHT

Obwohl Hauptbatterien eine niedrige Spannung haben, können sie doch bei Kurzschluß oder Erdung genug Strom abgeben, um brennbare Materialien zu entzünden oder Verletzungen bei Personen hervorzurufen.



VORSICHT

Wenn ein Austausch der FRU bei laufendem Betrieb nicht erlaubt ist, gehen Sie beim Austausch der FRU wie folgt vor: Schalten Sie den Computer aus, ziehen Sie alle Netzkabel von den Netzsteckdosen ab, entfernen Sie den Akku und ziehen Sie alle miteinander verbundenen Kabel ab.



סכנה

לפני הפעלת המחשב לאחר החלפת FRU יש לוודא שכל הברגים, הקפיצים, וחלקים קטנים אחרים נמצאים במקומם ואינם חופשיים לזוז בתוך המחשב. כדי לוודא זאת, יש לטלטל את המחשב ולהקשיב לגילוי קולות שקשוק. חלקי או שבבי מתכת עלולים לגרום לקצרים חשמליים.



סכנה

סוללת המתנה מסוימות מכילות כמות קטנה של ניקל וקדמיום. אין לפרק סוללת המתנה, לטעון אותה מחדש, להשליך אותה לאש או למים או לקצר אותה. יש לסלק את הסוללה כנדרש על ידי התקנות והחוקים המקומיים. יש להשתמש רק בסוללה המופיעה ברשימת החלקים המתאימה. שימוש בסוללה לא מתאימה עלול לגרום להצתה או התפוצצות של הסוללה.



סכנה

מארז הסוללה מכיל כמות קטנה של ניקל וקדמיום. אין לפרק את מארז הסוללה, להשליך אותו לאש או למים או לקצר אותו. יש לסלק את מארז הסוללה הסוללה כנדרש על ידי התקנות והחוקים המקומיים. יש להשתמש רק בסוללה המופיעה ברשימת החלקים המתאימה בזמן החלפת מארז הסוללה. שימוש בסוללה לא מתאימה עלול לגרום להצתה או התפוצצות של הסוללה.



סכנה

סוללת הליתיום עלולה לגרום לשריפה, להתפוצצות או לכוויות קשות. אין לטעון אותה מחדש, לסלק את המחבר המקוטב שלה, לפרק אותה או לחמם אותה לטמפרטורה העולה על 100 מעלות צלזיוס. אין לשרוף את הסוללה ואין לחשוף את תוכן התא למים. יש לסלק את הסוללה כנדרש בתקנות ובחוקים המקומיים. יש להשתמש רק בסוללה המופיעה ברשימת החלקים המתאימים. שימוש בסוללה אחרת עלול לגרום לסכנת שריפה או התפוצצות.



סכנה

אם מסך תצוגת הנוזלי (LCD) נשבר והנוזל מתוך המסך בא במגע עם עיניכם או ידיכם, שטפו את האזורים המגועים מיד במים במשך 15 דקות לפחות. פנו לקבלת עזרה רפואית אם תסמינים חנובעים מחמגע עם הנוזל נמשכים לאחר השטיפה.



סכנה

כדי למנוע התחשמלות, אין להסיר את מכסה הפלסטיק המגן על חלקו התחתון של הכרטיס החכמך.



סכנה

אף שהסוללות הראשיות הן בעלות מתח נמוך, סוללה מקוצרת או מוארקת עלולה להפיק זרם מספיק לגרימת כוויות או להצתת חומרים דליקים.



סכנה

אלא אם כן מותרת 'החלפה חמה' של ה-FRU המוחלף, פעלו כדלהלן לפני הסרתו:
כבו את המחשב, נתקו את כל כבלי החשמל מהשקעים, הוציאו את מארז הסוללות ונתקו את כל הכבלים המחוברים.



危険

FRU の交換後、コンピューターの電源を入れる前に、ねじ、バネ、その他の小さな部品がすべて正しい位置にあり、コンピューターの内部でそれらが緩んでいないことを確認してください。これを確認するには、コンピューターを振って、カチャカチャと音がしないか確認します。金属部品や金属破片はショートの原因になることがあります。



危険

予備バッテリーの中には少量のニッケルとカドミウムが含まれているものがあります。したがって、予備バッテリーの分解、再充電、火または水の中への投棄、またはショートさせることは決して行わないでください。バッテリーを廃棄する場合は地方自治体の条例に従ってください。適切なパーツ・リストにあるバッテリーだけを使用してください。誤ったバッテリーを使用すると、バッテリーが発火したり、爆発したりすることがあります。



危険

バッテリー・パックには少量のニッケルが含まれています。バッテリー・パックを分解したり、火または水の中に投げ込んだり、ショートさせないでください。バッテリー・パックの廃棄にあたっては、地方自治体の条例または規則に従ってください。バッテリー・パックを交換するときは、適切なパーツ・リストにあるバッテリーだけを使用してください。誤ったバッテリーを使用すると、バッテリーが発火したり、爆発したりすることがあります。



危険

リチウム・バッテリーは、火災、爆発、または重症のやけどを引き起こすことがあります。バックアップ・バッテリーの充電、その極性コネクターの取り外し、バッテリー本体の分解、
100 ℃ (212 ˚F) 以上への加熱、焼却、電池の中身を水に浸すことはしないでください。バッテリーを廃棄する場合は地方自治体の条例に従ってください。適切なパーツ・リストにあるバッテリーだけを使用してください。誤ったバッテリーを使用すると、バッテリーが発火したり、爆発したりすることがあります。



危険

LCD が破損し、 LCD の中の液体が目に入ったり、手に触れたりした場合は、液体が触れた部分を少なくとも 15 分間洗い流してください。洗い流した後に、液体によって何らかの症状が現れた場合は、医師の治療を受けてください。



危険

感電を防ぐため、インバーター・カードの下部を保護しているプラスチック・カバーを外さないでください。



危険

メイン・バッテリーの電圧は低くても、ショートしたり、接地したバッテリーが、作業者にやけどを負わせたり、可燃物を燃やすだけの電流を発生させる場合があります。



危険

交換しようとしている FRU がホット・スワップに対応していない場合、それを取り外す前に、コンピューターの電源をオフにし、すべての電源コードをコンセントから抜き、バッテリー・パックを取り外して、相互接続しているケーブルをすべて切り離してください。



위험

FRU를 교체하고 나서 컴퓨터 전원을 켜기 전에 모든 나사, 스프링 및 기타 작은 부품들이 올바른 위치에 있는지, 컴퓨터 내부에 단단하게 연결되어 있는지 확인하십시오. 컴퓨터를 흔들어 달깍거리는 소리가 나지 않는지 확인하십시오. 금속 부품 또는 금속 조각은 누전을 일으킬 수 있습니다.



위험

일부 보조 배터리에는 소량의 니켈 및 카트뮴이 포함되어 있습니다. 보조 배터리를 분해하거나, 다시 충전하거나, 불 또는 물에 던지거나, 단락시키지 마십시오. 배터리 팩을 폐기할 때에는 해당 지역의 법률 규정을 따르십시오. 배터리 팩을 교체할 때에는 올바른 배터리만 사용하십시오. 올바르지 않은 배터리를 사용하면 배터리가 발화되거나 폭발할 수 있습니다.



위험

배터리 팩에는 소량의 니켈이 포함되어 있습니다. 배터리 팩을 분해하거나, 불 또는 물에 던지거나, 단락시키지 마십시오. 배터리 팩을 폐기할 때에는 해당 지역의 법률 규정을 따르십시오. 배터리 팩을 교체할 때에는 올바른 배터리만 사용하십시오. 올바르지 않은 배터리를 사용하면 배터리가 발화되거나 폭발할 수 있습니다.



위험

리튬 배터리는 화재, 폭발 또는 심각한 화상을 일으킬 수 있습니다. 리튬 배터리를 다시 충전하거나, 극성 커넥터를 제거하거나, 분해하거나, 100C(212F) 이상으로 가열하거나, 소각하거나, 전지 내용물을 물에 노출시키지 마십시오. 배터리를 폐기할 때에는 해당 지역을 법률 규정을 따르십시오. 올바른 배터리만 사용하십시오. 올바르지 않은 배터리를 사용하면 배터리가 발화되거나 폭발할 수 있습니다.



위험

LCD가 파손되어 LCD 내부의 액체가 눈에 들어가거나 손에 묻으면 즉시 깨끗한 물로 15분 이상 닦아 내십시오. 씻은 후에 조금이라도 이상을 느끼면 즉시 병원에 가서 의사의 진찰을 받아야 합니다.



위험

전기적 위험을 방지하려면 인버터 카드의 아래 부분을 보호하는 플라스틱 덮개를 제거하지 마십시오.



위험

기본 배터리의 전압은 낮지만, 단락되거나 접지된 배터리는 화상을 입히기에 충분한 전류와 가연성 물질을 발생시킬 수 있습니다.



위험

FRU 교체 시 Hot Swap이 지원되지 않는 경우, FRU를 제거하기 전에 컴퓨터의 전원을 끄고, 전기 콘센트에서 전원 코드를 분리하고, 배터리를 제거한 후, 연결된 모든 케이블을 분리하십시오.



PELIGRO

Antes de encender el sistema despues de sustituir una FRU, compruebe que todos los tornillos, muelles y demás piezas pequeñas se encuentran en su sitio y no se encuentran sueltas dentro del sistema. Compruébelo agitando el sistema y escuchando los posibles ruidos que provocarían. Las piezas metálicas pueden causar cortocircuitos eléctricos.



PELIGRO

Algunas baterías de reserva contienen una pequeña cantidad de níquel y cadmio. No las desmonte, ni recargue, ni las eche al fuego o al agua ni las cortocircuite. Deséchelas tal como dispone la normativa local. Utilice sólo baterías que se encuentren en la lista de piezas. La utilización de una batería no apropiada puede provocar la ignición o explosión de la misma.



PELIGRO

Las baterías contienen pequeñas cantidades de níquel. No las desmonte, ni recargue, ni las eche al fuego o al agua ni las cortocircuite. Deséchelas tal como dispone la normativa local. Utilice sólo baterías que se encuentren en la lista de piezas al sustituir la batería. La utilización de una batería no apropiada puede provocar la ignición o explosión de la misma.



PELIGRO

La batería de repuesto es una batería de litio y puede provocar incendios, explosiones o quemaduras graves. No la recargue, ni quite el conector polarizado, ni la desmonte, ni caliente por encima de los 100°C (212°F), ni la incinere ni exponga el contenido de sus celdas al agua. Deséchela tal como dispone la normativa local.



PELIGRO

Si la LCD se rompe y el fluido de su interior entra en contacto con sus ojos o sus manos, lave inmediatamente las áreas afectadas con agua durante 15 minutos como mínimo. Obtenga atención medica si se presenta algún síntoma del fluido despues de lavarse.



PELIGRO

Para evitar descargas, no quite la cubierta de plástico que rodea la parte baja de la tarjeta invertida.



PELIGRO

Aunque las baterías principales tienen un voltaje bajo, una batería cortocircuitada o con contacto a tierra puede producir la corriente suficiente como para quemar material combustible o provocar quemaduras en el personal.



PELIGRO

Salvo que se permita el intercambio en caliente para la unidad sustituible localmente, realice lo siguiente antes de extraerla: apague el sistema, desconecte todos los cables de alimentación de las tomas de alimentación eléctrica, extraiga la batería y desconecte los cables de interconexión.



危險

完成 FRU 更換之後，在開啟電腦的電源之前，請確定所有螺絲、彈簧及其他小零件都已歸位，沒有遺留在電腦內部。
若要確認這一點，請搖晃電腦，聽聽看是否有卡嗒的聲響。
金屬零件或儀錶的火花會造成電線短路。



危險

部分備用電池含有微量的鋰和鎘。請勿拆開備用電池、再充電、丟入火或水中，或使其形成短路。請按照當地法令或規定來棄置電池。

僅限使用零件清單中的電池。使用不適當的電池會導致電池起火或爆炸。



危險

電池套件含有微量的鋰。請勿拆開電池套件、丟入火或水中，或使其形成短路。請按照當地法令或規定來棄置電池套件。

更換電池套件時，僅限使用零件清單中的電池。使用不適當的電池會導致電池起火或爆炸。



危險

鋰電池會導致起火、爆炸或嚴重燒傷。請勿再充電、拔除其電極接頭、拆開、加熱超過 100°C (212°F) 、焚燒，或讓電池組成物浸到水。請按照當地法令或規定來棄置電池。
僅限使用零件清單中的電池。使用不適當的電池會導致電池起火或爆炸。



危險

如果 LCD 破裂導致 LCD 流出的液體沾到您的眼睛或手，請立即以清水沖洗沾染部位至少 15 分鐘。如果在清洗後出現該液體所造成的任何症狀，請就醫治療。



危險

為避免電擊，請勿拆下轉換卡下面的塑膠護蓋。



危險

雖然主電池的電壓很低，但短路或接地電池所產生的電流，仍足以使人燒傷或使可燃物質起火。



危險

除非 FRU 允許以熱抽換來替換，否則請依下列方式將其移除：將電腦關機，拔除插座上所有電源線，移除電池包，並拔開任何交互連接的線材。

Chapter 2. General checkout

This chapter contains the following topics:

Before you go to the checkout instructions, ensure that you read the following important notes.

Important notes:

- **Only certified trained personnel should service the computer.**
- **Before replacing any FRU, read the entire page on removing and replacing FRUs.**
- **When you replace FRUs, it is recommended to use new nylon-coated screws.**
- **Be extremely careful during such write operations as copying, saving, or formatting.** Drives in the computer that you are servicing sequence might have been altered. If you select an incorrect drive, data or programs might be overwritten.
- **Replace a FRU only with another FRU of the correct model.** When you replace a FRU, make sure that the model of the machine and the FRU part number are correct by visiting https://support.lenovo.com/partslookup.
- **A FRU should not be replaced because of a single, unreproducible failure.** Single failures can occur for a variety of reasons that have nothing to do with a hardware defect, such as cosmic radiation, electrostatic discharge, or software errors. Consider replacing a FRU only when a problem recurs. If you suspect that a FRU is defective, clear the error log and run the test again. If the error does not recur, do not replace the FRU.
- **Be careful not to replace a nondefective FRU.**

What to do first

When you return a FRU, you must include the following information in the parts exchange form or parts return form that you attach to it:

1. Name and phone number of service technician
2. Date of service
3. Date on which the machine failed
4. Date of purchase
5. Failure symptoms, error codes appearing on the display, and beep symptoms
6. Procedure index and page number in which the failing FRU was detected
7. Failing FRU name and part number
8. Machine type, model number, and serial number
9. Customer's name and address

Note: During the warranty period, the customer may be responsible for repair costs if the computer damage was caused by misuse, accident, modification, unsuitable physical or operating environment, or improper maintenance by the customer. Following is a list of some common items that are not covered under warranty and some symptoms that might indicate that the system was subjected to stress beyond normal use.

Before checking problems with the computer, determine whether the damage is covered under the warranty by referring to the following list:

The following are not covered under warranty:

- LCD panel cracked from the application of excessive force or from being dropped
- Scratched (cosmetic) parts

© Copyright Lenovo 2020, 20223

- Distortion, deformation, or discoloration of the cosmetic parts
- Plastic parts, latches, pins, or connectors that have been cracked or broken by excessive force
- Damage caused by liquid spilled into the system
- Damage caused by the improper insertion of a personal-computer card (PC card) or the installation of an incompatible card
- Improper disc insertion or use of an external optical drive
- Fuses blown by attachment of a non-supported device
- Forgotten computer password (making the computer unusable)
- Sticky keys caused by spilling a liquid onto the keyboard
- Use of an incorrect ac power adapter on laptop products

The following symptoms might indicate damage caused by non-warranted activities:
- Missing parts might be a symptom of unauthorized service or modification.
- Check for obvious damage to a hard disk drive. If the spindle of a hard disk drive becomes noisy, the hard disk drive might have been dropped or subject to excessive force.

Checking the ac power adapter

You are here because the computer fails only when the ac power adapter is used.
- If the power problem occurs only when the docking station or the port replicator is used, replace the docking station or the port replicator.
- If the system status indicator does not blink three times when an ac power source is connected, check the power cord of the ac power adapter for correct continuity and installation.
- If the computer does not charge during operation, go to “Checking the battery and operational charging” on page 20.

Note: Noise from the ac power adapter does not always indicate a defect.

Checking the USB-C type ac power adapter

To check the USB-C type ac power adapter, do the following:

1. Connect the computer to a power outlet and turn on the computer.
2. Start Lenovo Vantage program, and locate the **Power** section. The ac power adapter information is displayed.

Ensure that you use the USB-C type ac power adapter that is shipped with the computer to provide enough power to the computer. Otherwise a message will be displayed, prompting you that the computer will not be charged or will be charged slowly.

Checking the battery and operational charging

Checking the battery

This system supports only batteries specially designed for this specific system and manufactured by Lenovo or an authorized builder. The system does not support unauthorized batteries or batteries designed for other systems. If an unauthorized battery or a battery designed for another systems is installed, the system will not charge.

Attention: Lenovo has no responsibility for the performance or safety of unauthorized batteries, and provides no warranties for failures or damage arising out of their use.

Click the battery-status icon in the Windows® notification area to check the battery status. The battery-status icon displays the percentage of battery power remaining.

Checking the operational charging

To check whether the battery charges properly during operation, do the following:

1. Discharge the battery until the remained battery power is less than 50%.
2. Perform operational charging. Click the battery status icon in the Windows notification area to display detailed battery information. If it indicates that the battery is not charging, replace the battery.
3. Check the battery status again. If the same error still exists, replace the system board.

Chapter 3. Locating computer controls, connectors, and indicators

This topic introduces the locations of the computer controls, connectors, and indicators.

Front

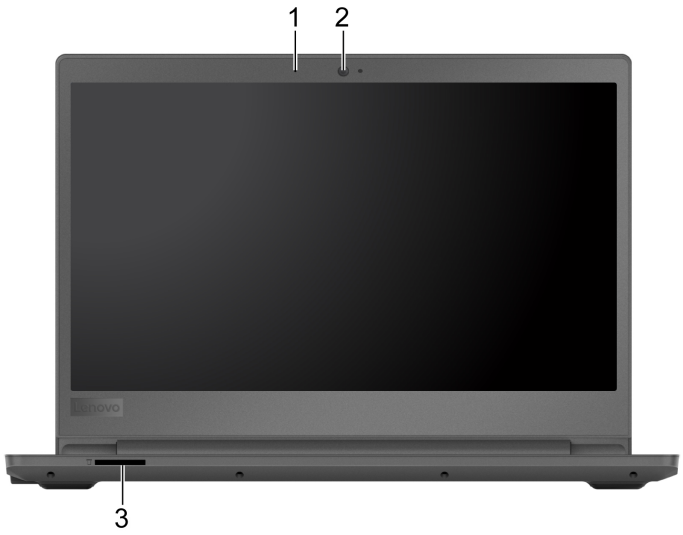

Item	Item
1. Microphone	2. Camera
3. SD card slot*	

* for selected models

© Copyright Lenovo 2020, 20223

Base



Item	Item
1. Fingerprint reader*	2. Touchpad with buttons
3. Power button	

* for selected models

Left

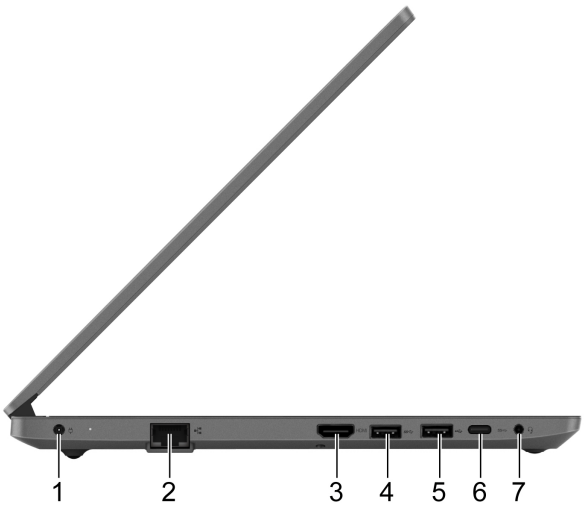

Item	Item
1. Power connector	2. Ethernet connector
3. HDMI™ connector	4. USB-A 3.2 Gen 1 connector
5. USB-A 2.0 connector	6. USB-C® (3.2 Gen 1) connector
7. Audio connector	

Right

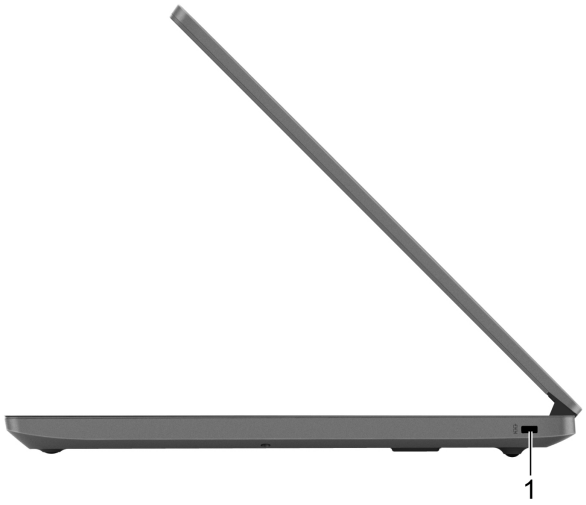

1. Mini security-lock slot

Chapter 4. FRU replacement notices

This chapter presents notices related to removing and replacing parts. Read this chapter carefully before replacing any FRU.

CRU statement for customers:
You can resolve some problems with your product with a replacement part you can install yourself, called a "Customer Replaceable Unit" or "CRU." Some CRUs are designated as self-service CRUs and others are designated as optional-service CRUs. *Installation of self-service CRUs is your responsibility. For optional-service CRUs, you can either install the CRU yourself or you can request that a Service Provider install the CRU according to the warranty service for your product.* If you intend on installing the CRU, Lenovo will ship the CRU to you. CRU information and replacement instructions are shipped with your product and are available from Lenovo at any time upon request. You can find a list of CRUs for your product in this *Hardware Maintenance Manual*. An electronic version of this manual can be found at https://support.lenovo.com. Click **Documentation** and then follow the on-screen instructions to find the manual for your product. You might be required to return the defective CRU. When return is required: (1) return instructions, a prepaid shipping label, and a container will be included with the replacement CRU; and (2) you might be charged for the replacement CRU if Lenovo does not receive the defective CRU within thirty (30) days of your receipt of the replacement CRU. See your Lenovo Limited Warranty documentation for full details.

Service tool kit

Ensure that the following service tool kit is prepared before you service a Lenovo notebook computer.

No.	Tool name	Tool type
1	Phillips-head screwdriver	Common tool
2	Torx-head screwdriver	Common tool
3	Conductive tweezers	Common tool
4	Hexagonal socket	Common tool
5	Silicone grease	Consumable tool
6	Polyamide tape	Consumable tool
7	Mylar tape	Consumable tool
8	Eraser	Consumable tool
9	Electrical tape	Consumable tool
10	Double-sided tape	Consumable tool
11	Conductive tape	Consumable tool

Note: The silicone grease can be applied to the surfaces of the microprocessor and heatsink to eliminate air gaps. The hexagonal socket is used to pick up the antenna connectors.

Screw notices

Loose screws can cause a reliability problem. In the ThinkPad notebook computer, this problem is addressed with special nylon-coated screws that have the following characteristics:

- They maintain tight connections.

© Copyright Lenovo 2020, 20223

- They do not easily come loose, even with shock or vibration.
- They are harder to tighten.

Do the following when you service this machine:

- Keep the screw kit in your tool bag. For the part number of the screw kit, go to https://support.lenovo.com/partslookup.
- It is recommended to use new screws.
- It is recommended to use each screw only once.

Tighten screws as follows:

- **Plastic to plastic**
  Turn an additional 90 degrees after the screw head touches the surface of the plastic part.

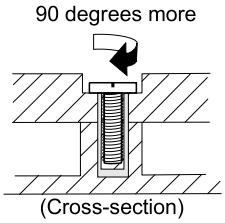

- **Logic card to plastic**
  Turn an additional 180 degrees after the screw head touches the surface of the logic card.

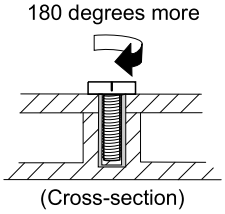

Notes:

- Ensure that you use the correct screw. It is recommended to use new screws for replacements. If you have a torque screwdriver, tighten all screws firmly to the torque specified in the screw information table for each step.
- Ensure that torque screwdrivers are calibrated correctly following country specifications.

Chapter 5. Identifying FRUs (CRUs)

Major FRUs and CRUs

The exploded illustrations help Lenovo service technicians identify FRUs or CRUs that they may need to replace when servicing a customer's computer.

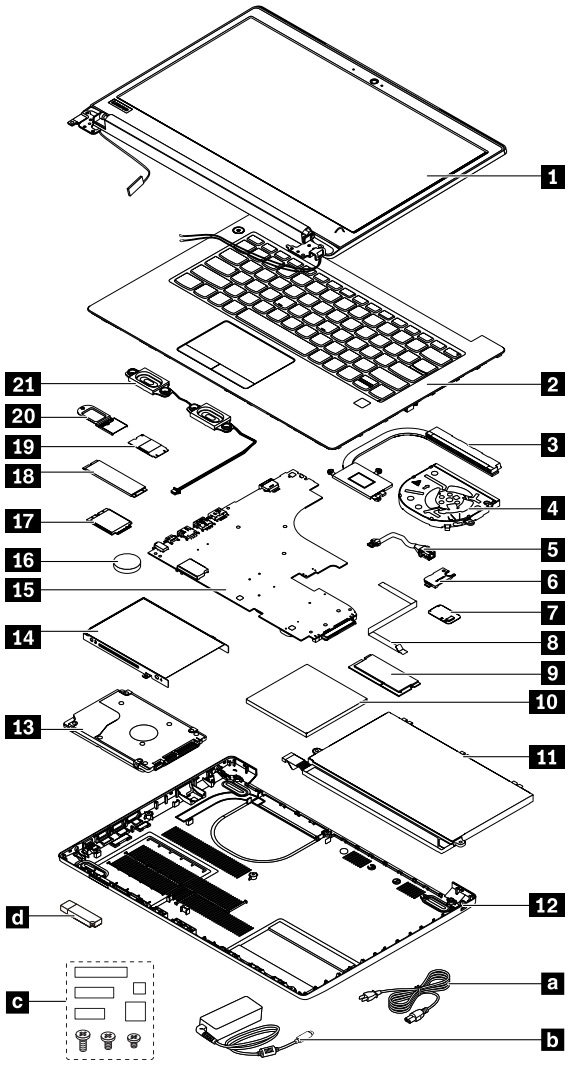

Figure 1. Lenovo E41-55 exploded view

Table 1. FRU (CRU) categories

No.	FRU (CRU) description	Self-service CRU	Optional-service CRU
1	LCD module	No	No
2	Upper case (with keyboard)	No	No
3	Thermal fan sink	No	No
4	Thermal fan	No	No

© Copyright Lenovo 2020, 20223

Table 1. FRU (CRU) categories (continued)

No.	FRU (CRU) description	Self-service CRU	Optional-service CRU
5	DC-IN cable	No	No
6	fingerprint reader bracket*	No	No
7	fingerprint reader*	No	No
8	fingerprint reader cable*	No	No
9	Memory DIMM	No	No
10	Memory module bracket	No	No
11	built-in battery	No	No
12	Lower case	No	No
13	Hard disk drive	No	No
14	Hard disk drive bracket	No	No
15	System board	No	No
16	CMOS battery	No	No
17	Wireless LAN card	No	No
18	M.2 2280 solid state drive*	No	No
19	M.2 2242 solid state drive*	No	No
20	SSD bracket	No	No
21	Speakers	No	No
a	Power cord	Yes	No
b	ac power adapter	Yes	No
c	Miscellaneous parts kits	No	No
d	Lenovo factory recovery USB key*	No	No

* for selected models

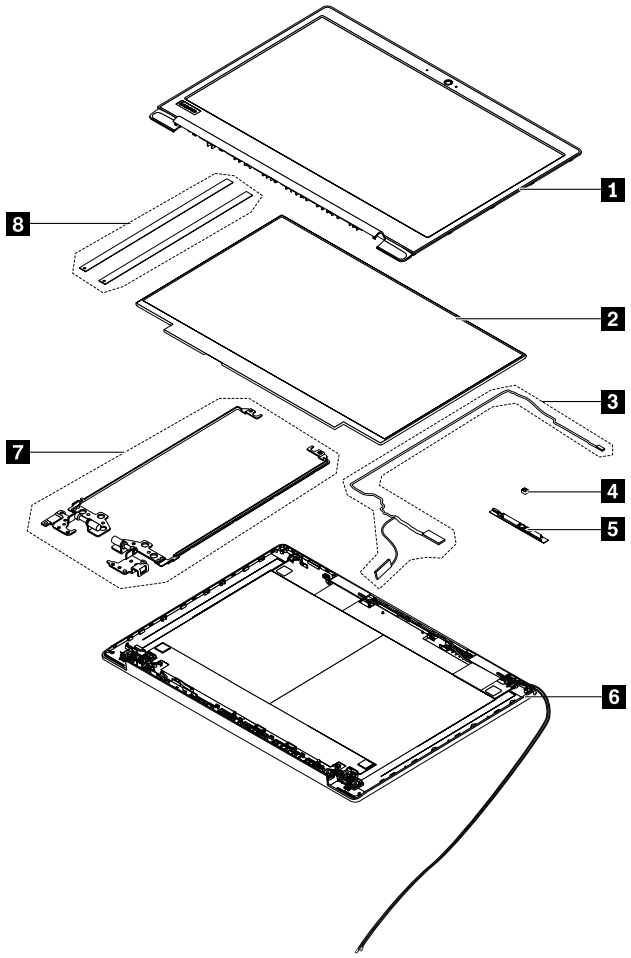

Figure 2. LCD module — exploded view

Table 2. FRU categories for the LCD module

No.	FRU (CRU) description	Self-service CRU	Optional-service CRU
1	LCD bezel	No	No
2	LCD panel	No	No
3	LCD cable	No	No
4	Microphone rubber	No	No
5	Camera board	No	No
6	LCD rear cover assembly	No	No
7	Hinge assembly	No	No
8	LCD elastic adhesive tapes	No	No

Chapter 6. Removing a FRU or CRU

General guidelines

When removing or replacing a FRU, ensure that you observe the following general guidelines:

1. Do not try to service any computer unless you have been trained and certified. An untrained person runs the risk of damaging parts.
2. Begin by removing any FRUs that have to be removed before replacing the failing FRU. Any such FRUs are listed at the beginning of each FRU replacement procedure. Remove them in the order in which they are listed.
3. Follow the correct sequence in the steps for removing a FRU, as shown in the illustrations by the numbers in square callouts.
4. When removing a FRU, move it in the direction as shown by the arrow in the illustration.
5. To install a new FRU in place, perform the removal procedure in reverse and follow any notes that pertain to replacement.
6. When replacing a FRU, carefully retain and reuse all screws. If screws are missing, look up the Lenovo parts numbers by visiting https://support.lenovo.com/partslookup for replacement screws and order them through the Lenovo CRM system.
7. When replacing the base cover, reapply all labels that come with the replacement base cover. If some original labels are not included with the replacement base cover, peal them off from the original base cover and paste them on the replacement base cover.

DANGER

Before removing any FRU or CRU, shut down the computer and unplug all power cords from electrical outlets.

Attention: After replacing a FRU, do not turn on the computer until you have ensured that all screws, springs, and other small parts are in place and none are loose inside the computer. Verify this by shaking the computer gently and listening for rattling sounds. Metallic parts or metal flakes can cause electrical short circuits.

Attention: The system board is sensitive to and can be damaged by ESD. Before touching it, establish personal grounding by touching a ground point with one hand or by using an ESD strap (P/N 6405959).

Remove the lower case

Make sure the computer has been shut down before servicing the computer.

Step 1. Remove 10 screws.

© Copyright Lenovo 2020, 20223

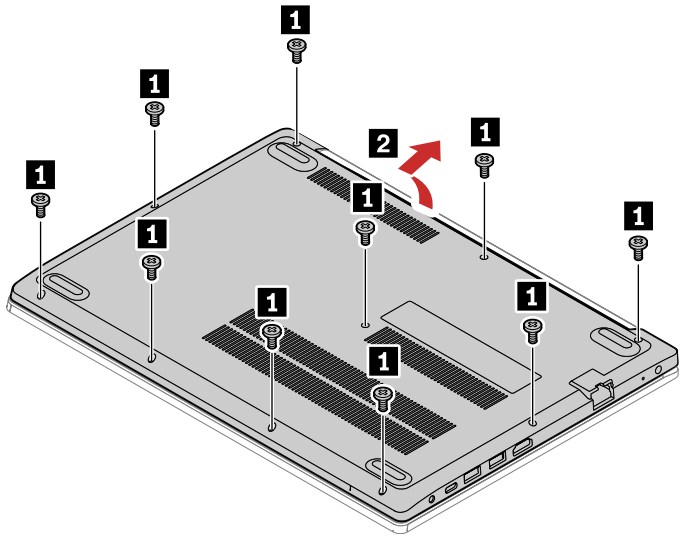

Figure 3. Remove 10 screws

Screw specifications	Number of screws
M2.0 x 5	10

Step 2. Remove the lower case.

Remove the hard disk drive and hard disk drive bracket

Make sure the following FRUs (or CRUs) have been removed.

"Remove the lower case" on page 33

Step 1. Remove 3 screws.

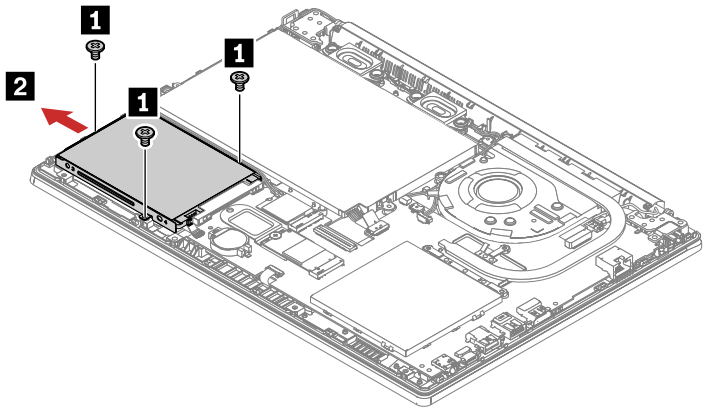

Figure 4. Remove 3 screws

Screw specifications	Number of screws
M2.0 x 3	3

Step 2. Remove the hard disk drive with disk drive bracket.

Step 3. Remove 4 screws that secure the hard disk drive to the hard disk drive bracket.

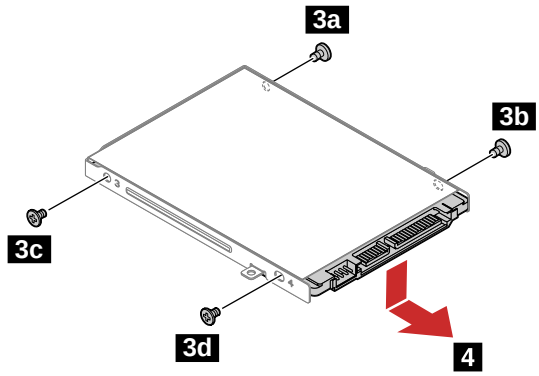

Figure 5. Remove 4 screws and remove hard disk drive bracket

Step 4. Remove the hard disk drive.

Remove the memory module bracket and memory DIMM

Make sure the following FRUs (or CRUs) have been removed.

"Remove the lower case" on page 33

Step 1. Remove memory module bracket.

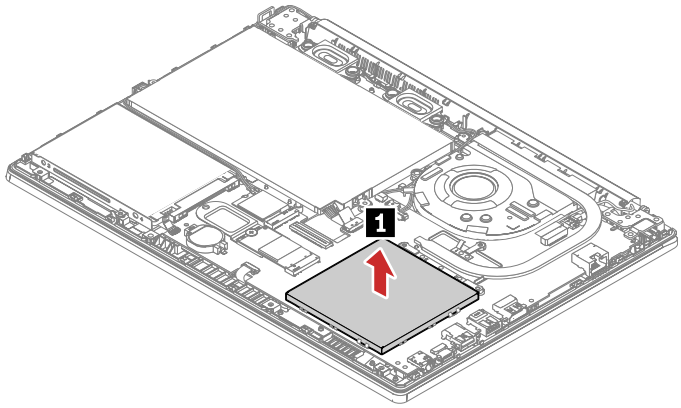

Figure 6. Remove memory module bracket

Step 2. Remove the memory DIMM.

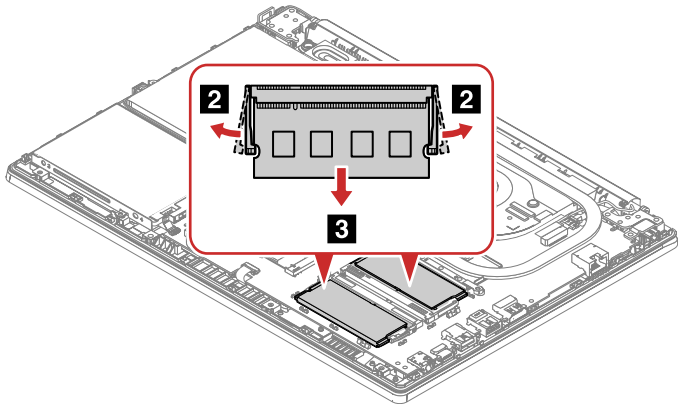

Remove the M.2 2280 solid-state drive (for selected models)

Make sure the following FRUs (or CRUs) have been removed.

"Remove the lower case" on page 33

Step 1. Remove 1 screw.

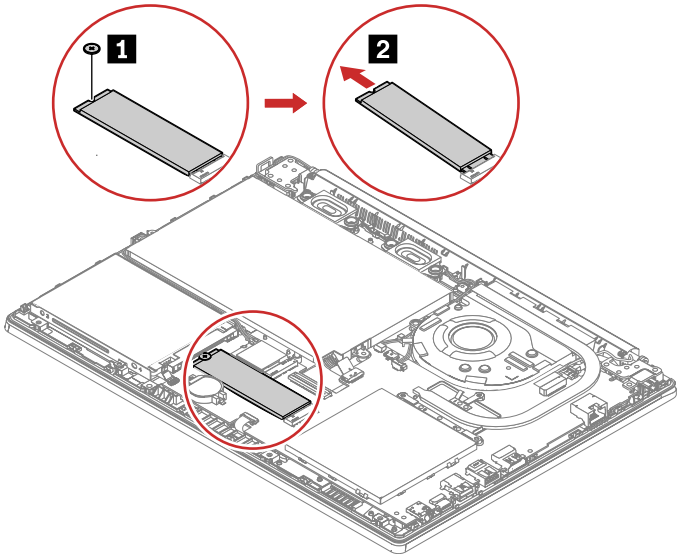

Figure 7. Remove 1 screw and remove the M.2 2280 solid-state drive

Screw specifications	Number of screws
M2.0 x 3	1

Step 2. Remove the M.2 solid-state drive by pulling it away from the slot.

Remove the M.2 2242 solid-state drive (for selected models)

Make sure the following FRUs (or CRUs) have been removed.

"Remove the lower case" on page 33

Step 1. Remove 1 screw.

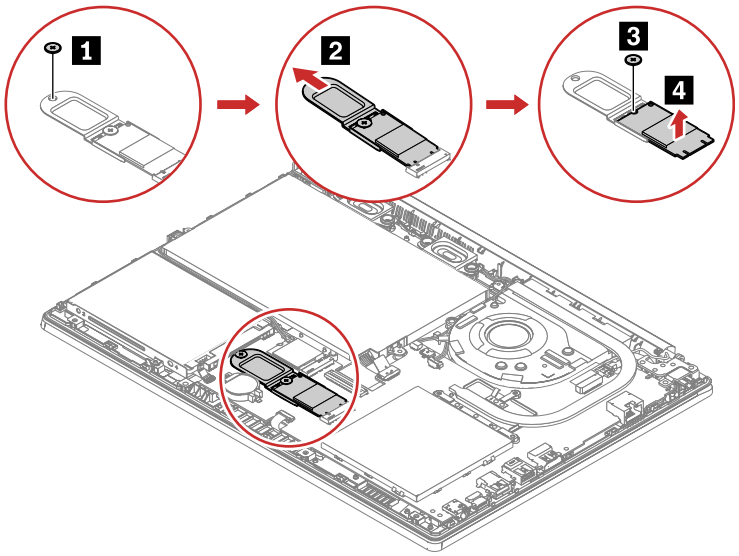

Figure 8. Remove 1 screw and remove the M.2 2242 solid-state drive

Screw specifications	Number of screws
M2.0 x 2	1

Step 2. Pull the M.2 solid-state drive with bracket away from the slot.

Step 3. Remove the screw that secures the M.2 2242 solid-state drive to the solid-state drive bracket.

Step 4. Remove the M.2 2242 solid-state drive.

Remove the heat sink

Make sure the following FRUs (or CRUs) have been removed.

"Remove the lower case" on page 33

Step 1. Remove 3 screws.

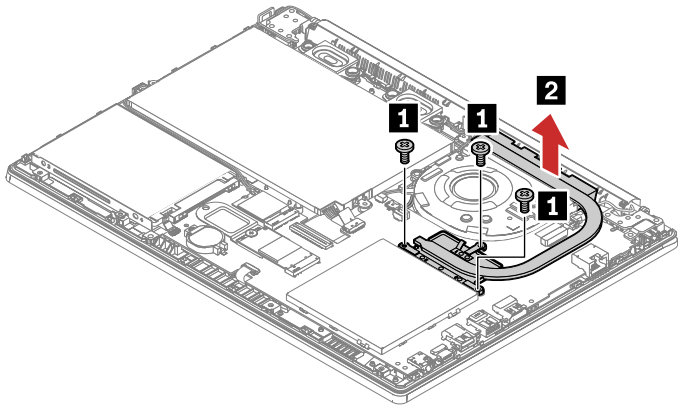

Figure 9. Remove 3 screws

Screw specifications	Number of screws
M2.0 x 3	3

Step 2. Remove the heat sink.

Remove the thermal fan

Make sure the following FRUs (or CRUs) have been removed.

"Remove the lower case" on page 33

Step 1. Detach the thermal fan connector.

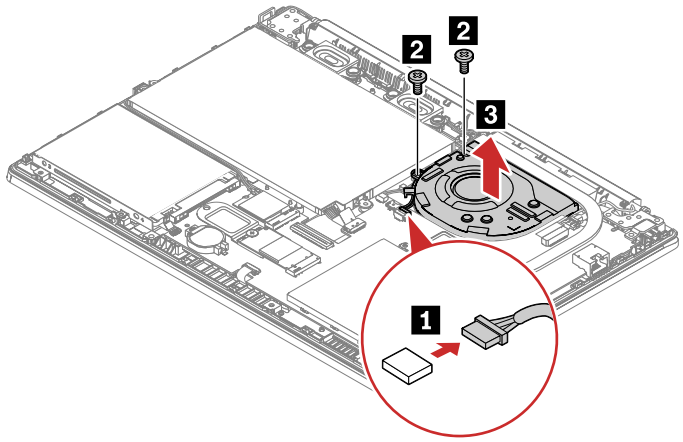

Figure 10. Detach the thermal fan connector

Screw specifications	Number of screws
M2.0 x 3	2

Step 2. Remove 2 screws.

Step 3. Remove the thermal fan.

Remove the CMOS battery

Make sure the following FRUs (or CRUs) have been removed.

"Remove the lower case" on page 33

Step 1. Pry up the CMOS battery.

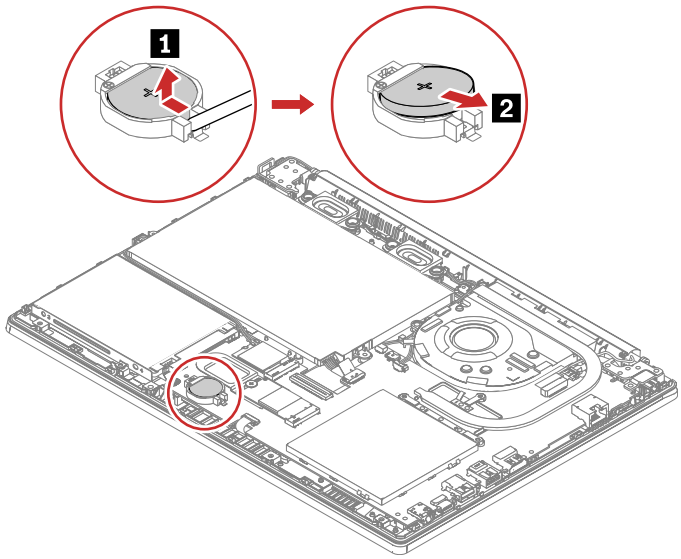

Figure 11. Pry up the CMOS battery

Step 2. Remove the RTC battery.

Remove the built in battery

Make sure the following FRUs (or CRUs) have been removed.

"Remove the lower case" on page 33

Step 1. Detach the battery connector.

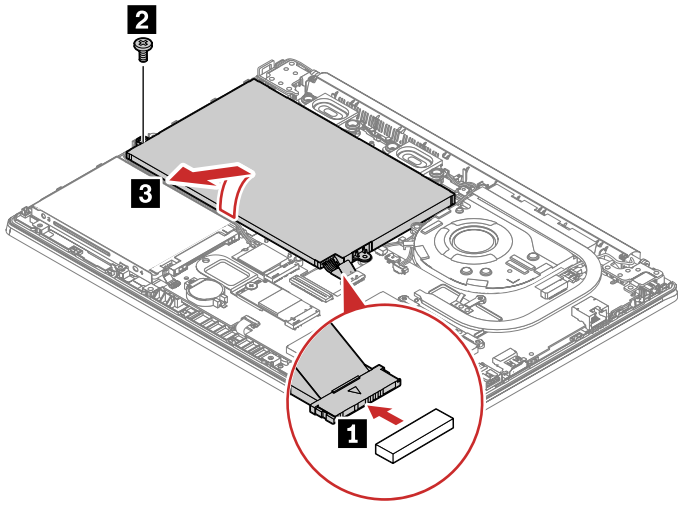

Figure 12. Detach the connector, remove a screw and remove the built-in battery

Attention: Use your fingernail to unplug the battery connector. Do not pull the cable.

Step 2. Remove 1 screw.

Screw specifications	Number of screws
M2.0 x 3	1

Step 3. Remove the built-in battery.

Remove the fingerprint reader cable, fingerprint reader and fingerprint reader bracket

Make sure the following FRUs (or CRUs) have been removed.

Note: Fingerprint reader, fingerprint reader bracket and fingerprint cable is for selected models.

"Remove the lower case" on page 33

Step 1. Detach fingerprint reader cable.

Figure 13. Detach fingerprint reader cable and remove fingerprint reader

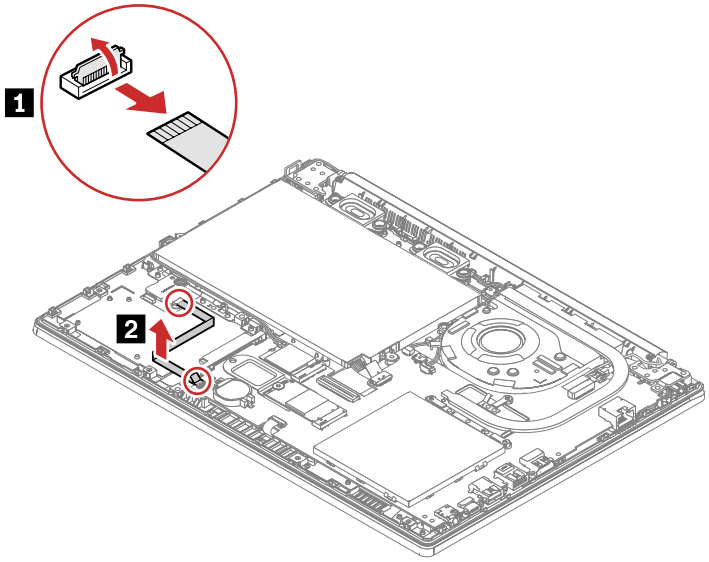

Step 2. Detach the fingerprint reader cable from fingerprint reader.

Step 3. Remove 1 screw.

Step 4. Remove fingerprint reader bracket.

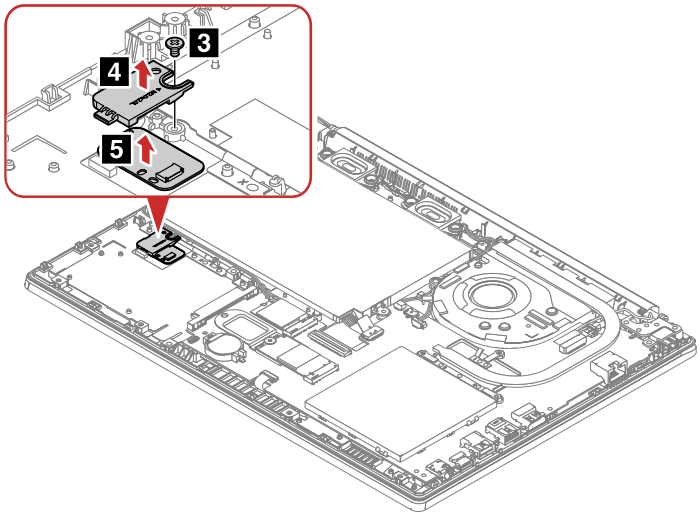

Screw specifications	Number of screws
M2.0 x 2	1

Step 5. Remove fingerprint reader.

Remove the Wireless LAN card

Make sure the following FRUs (or CRUs) have been removed.

"Remove the lower case" on page 33

Step 1. Remove the WLAN mylar.

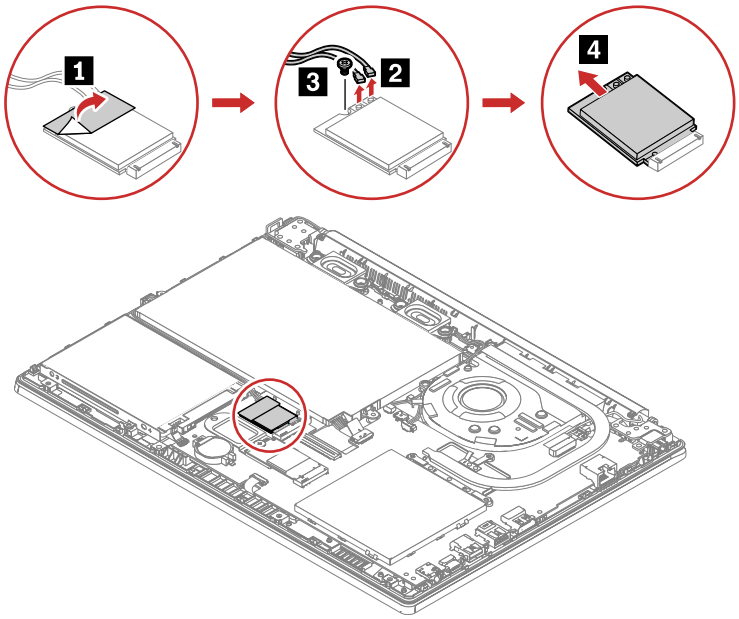

Figure 14. Remove the mylar, detach the cable and remove the Wireless WAN card

Step 2. Detach the main antenna cable connectors.

Step 3. Detach the auxiliary antenna cable connectors.

Step 4. Remove the Wireless LAN card.

Remove the speakers

Make sure the following FRUs (CRUs) have been removed.

"Remove the lower case" on page 33

Step 1. Detach the speaker connector from the system board.

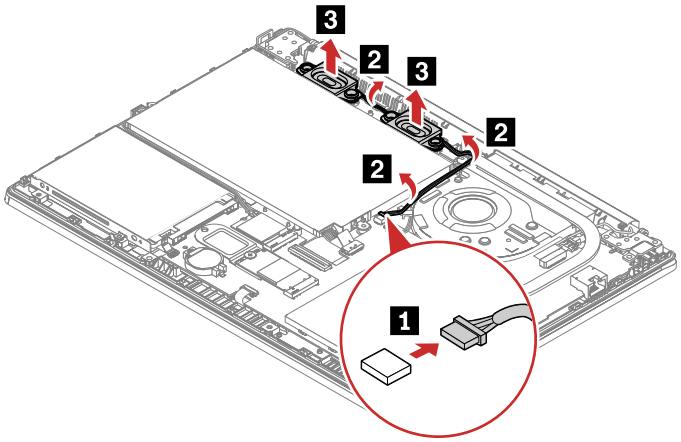

Figure 15. Detach the connector

Step 2. Release the speaker cable.

Step 3. Remove the speakers.

Remove the DC-in cable

Make sure the following FRUs (CRUs) have been removed.

"Remove the lower case" on page 33

Step 1. Remove 3 screws.

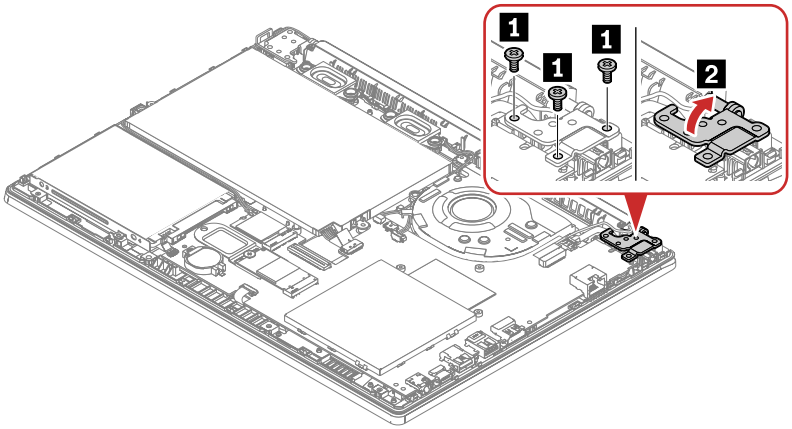

Figure 16. Remove 3 screws and lift up the hinge

Screw specifications	Number of screws
M2.5 x 5.5	3

Step 2. Lift up the hinge.

Step 3. Unplug the DC-in cable.

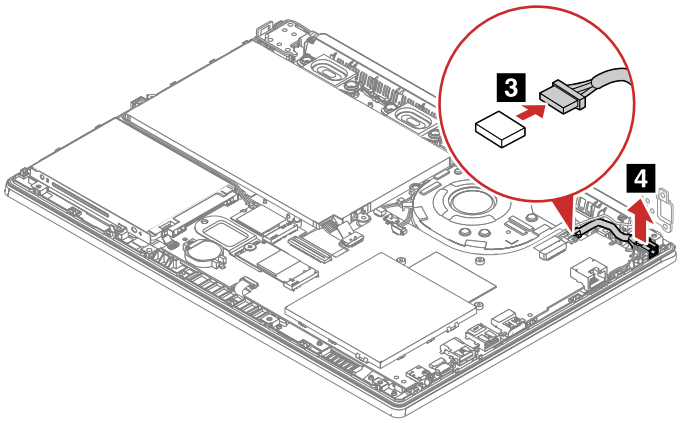

Figure 17. Unplug the DC-in cable and remove the DC-in cable

Step 4. Remove the DC-in cable.

Remove the LCD unit

Make sure the following FRUs (CRUs) have been removed. Also make sure the antenna cables have been disconnected from the wireless module and taken out of the cable guiders.

"Remove the lower case" on page 33

"Remove the built in battery" on page 39

Step 1. Remove 6 screws which secure the hinges to the upper case.

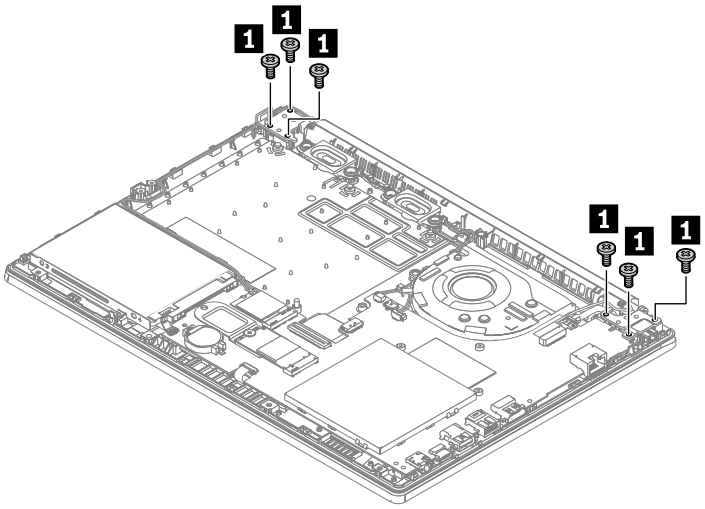

Screw specifications	Number of screws
M2.5 x 5.5	6

Figure 18. Remove 6 screws

Step 2. Detach Wireless WAN cables.

Step 3. Detach LCD cable.

Step 4. Remove the cables.

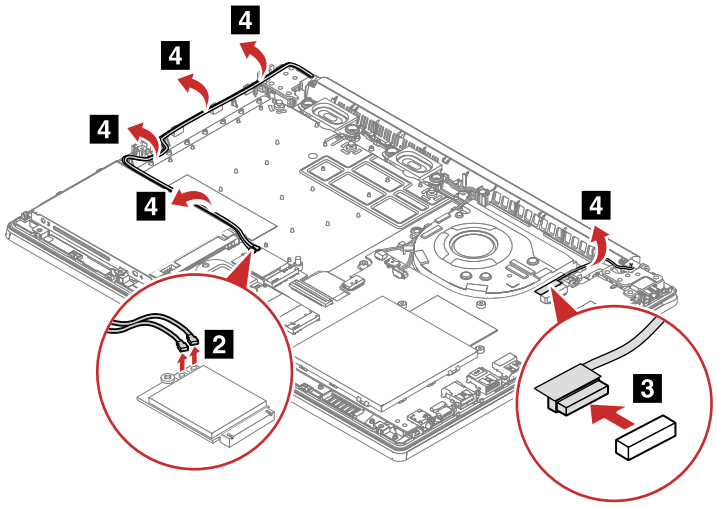

Figure 19. Remove the cables

Step 5. Pivot the LCD unit downward.

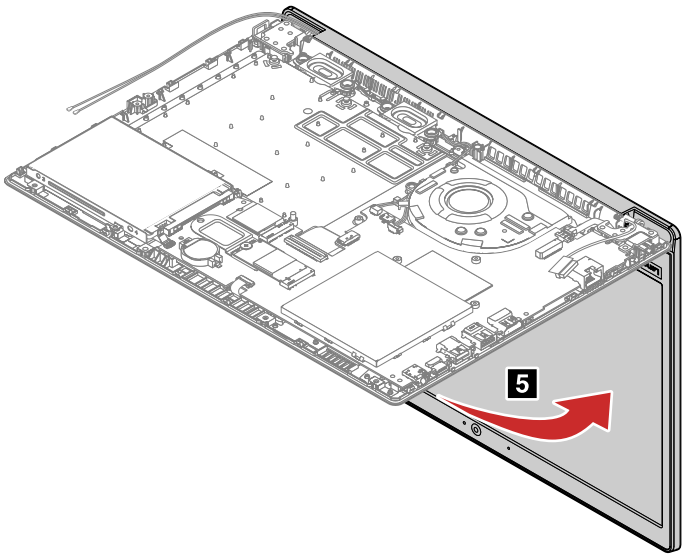

Figure 20. Pivot the LCD unit downward

Step 6. Remove the LCD unit.

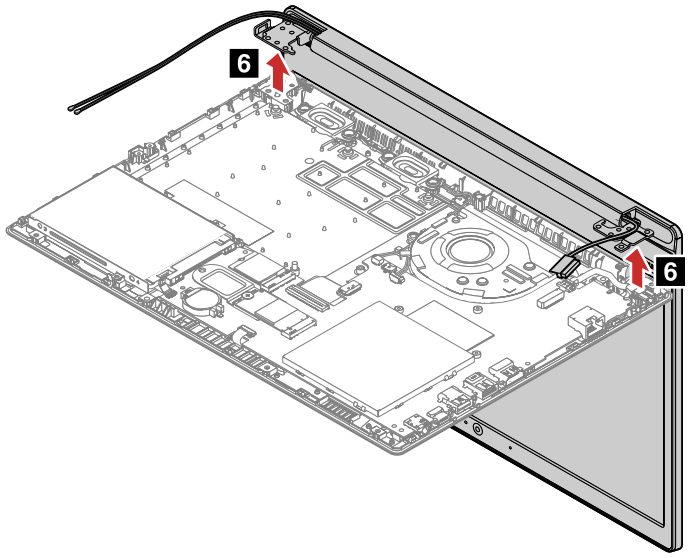

Figure 21. Remove LCD unit

Remove the system board

Make sure the following FRUs (or CRUs) have been removed.

- “Remove the lower case” on page 33
- “Remove the hard disk drive and hard disk drive bracket” on page 34
- “Remove the memory module bracket and memory DIMM” on page 35
- “Remove the M.2 2280 solid-state drive (for selected models)” on page 36
- “Remove the M.2 2242 solid-state drive (for selected models)” on page 36
- “Remove the heat sink” on page 37

“Remove the thermal fan” on page 38
“Remove the CMOS battery” on page 38
“Remove the built in battery” on page 39
“Remove the Wireless LAN card” on page 41

Step 1. Remove 3 screws.

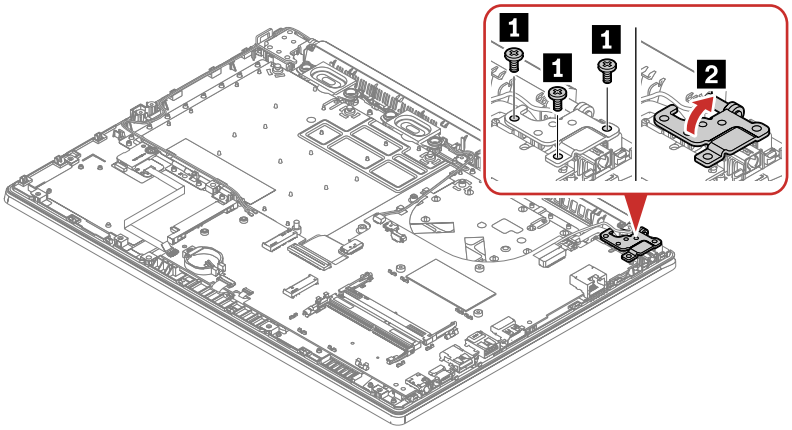

Figure 22. Remove 3 screws and lift up the hinge

Step 2. Lift up the hinge.

Step 3. Detach the keyboard cable, speaker connector, DC-in cable, LCD cable, touch pad cables and fingerprint reader cable.

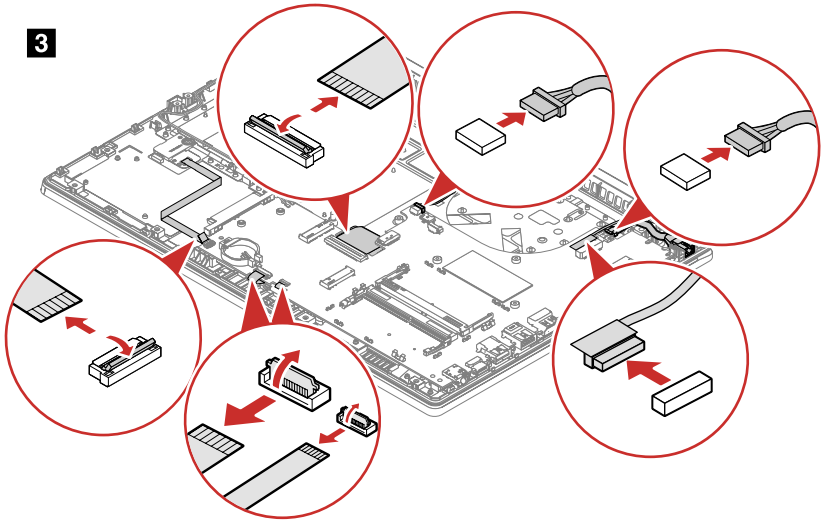

Figure 23. Detach cables and connectors

Note: A Mylar film might cover the keyboard connector and you need to open it first before accessing to keyboard connector. When you install the system board, remember to attach the mylar on the keyboard connector for better protection of the keyboard.

Step 4. Remove 3 screws.

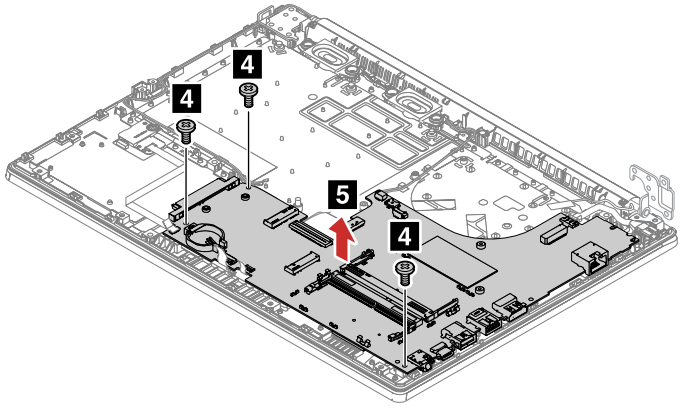

Screw specifications	Number of screws
M2.0 x 3	3

Figure 24. Remove 3 screws

Step 5. Carefully remove the system board.

Remove the upper case (with keyboard and touch pad)

Make sure the following FRUs (CRUs) have been removed.

- “Remove the lower case” on page 33
- “Remove the hard disk drive and hard disk drive bracket” on page 34
- “Remove the memory module bracket and memory DIMM” on page 35
- “Remove the M.2 2280 solid-state drive (for selected models)” on page 36
- “Remove the M.2 2242 solid-state drive (for selected models)” on page 36
- “Remove the heat sink” on page 37
- “Remove the thermal fan” on page 38
- “Remove the CMOS battery” on page 38
- “Remove the built in battery” on page 39
- “Remove the fingerprint reader cable, fingerprint reader and fingerprint reader bracket” on page 40
- “Remove the Wireless LAN card” on page 41
- “Remove the speakers” on page 42
- “Remove the DC-in cable” on page 42
- “Remove the LCD unit” on page 43
- “Remove the system board” on page 45

Note: A Mylar film might cover the keyboard connector and you need to open it first before accessing to keyboard connector. When you install the upper case, remember to attach the mylar on the keyboard connector for better protection of the keyboard.

Disassemble the LCD module

The LCD module as a whole is not a FRU. Instead, it contains FRUs as its components. Before disassembling the LCD module, make sure it has been detached from the upper case. Refer to “Remove the upper case (with keyboard and touch pad)” on page 47 for instructions.

Remove the LCD bezel

Make sure the following FRUs (CRUs) have been removed.

- “Remove the lower case” on page 33
- “Remove the built in battery” on page 39
- “Remove the LCD unit” on page 43

Step 1. Remove LCD bezel.

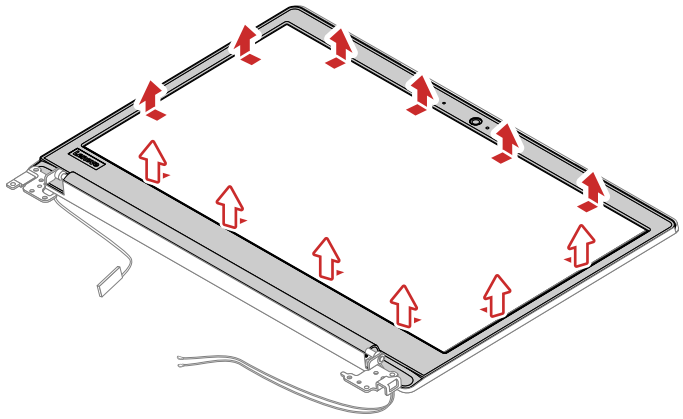

Figure 25. Remove LCD bezel

Remove the LCD panel

Make sure the following FRUs (CRUs) have been removed.

- “Remove the lower case” on page 33
- “Remove the built in battery” on page 39
- “Remove the LCD unit” on page 43
- “Remove the LCD bezel” on page 48

Step 1. Grasp the end of two elastic adhesive tapes with tweezers. Pull out each tape slowly in the direction as shown until two elastic tapes are all released from LCD unit.

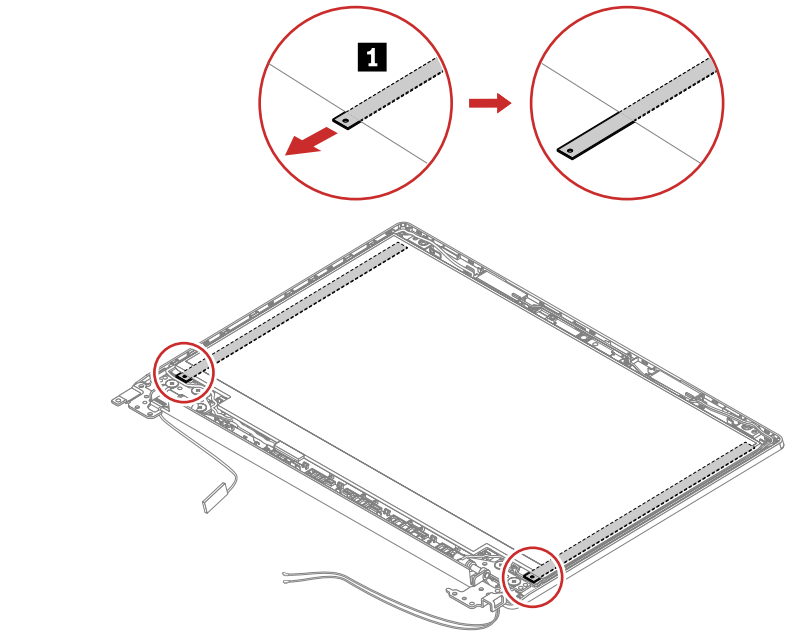

Figure 26. Pull the elastic tapes of LCD bezel

Step 2. Turn over the LCD panel.

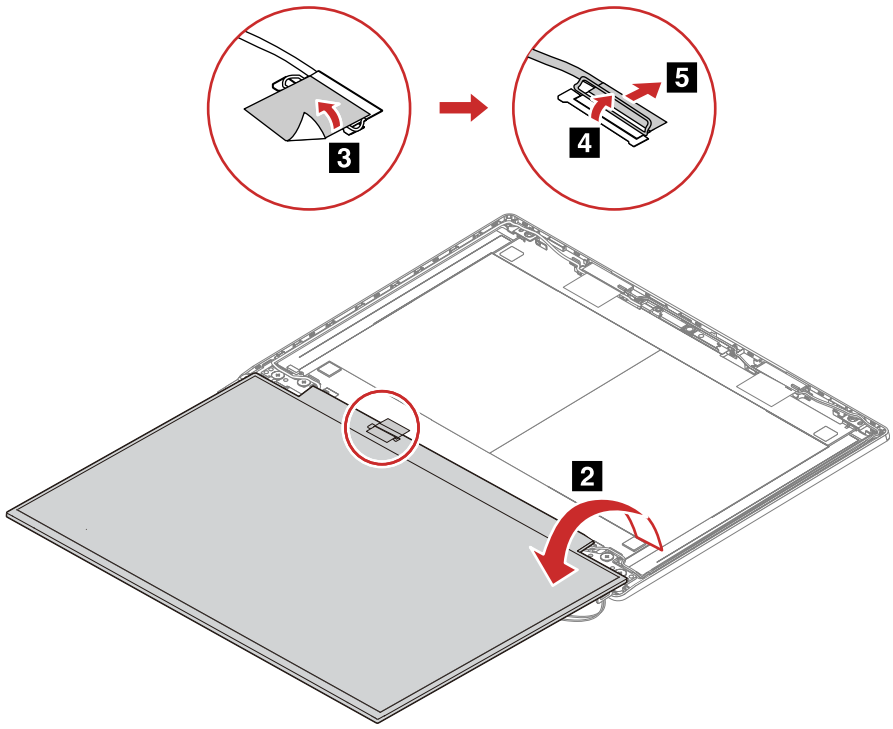

Figure 27. Turn over the LCD panel

Step 3. Peel off the sticker.

Step 4. Detach the LCD cable connector.

Step 5. Remove the LCD panel.

Remove the hinges and LCD cable

Make sure the following FRUs (or CRUs) have been removed.

- “Remove the lower case” on page 33
- “Remove the built in battery” on page 39
- “Remove the LCD unit” on page 43
- “Remove the LCD bezel” on page 48
- “Remove the LCD panel” on page 48

Step 1. Remove LCD cable and Wireless LAN cable.

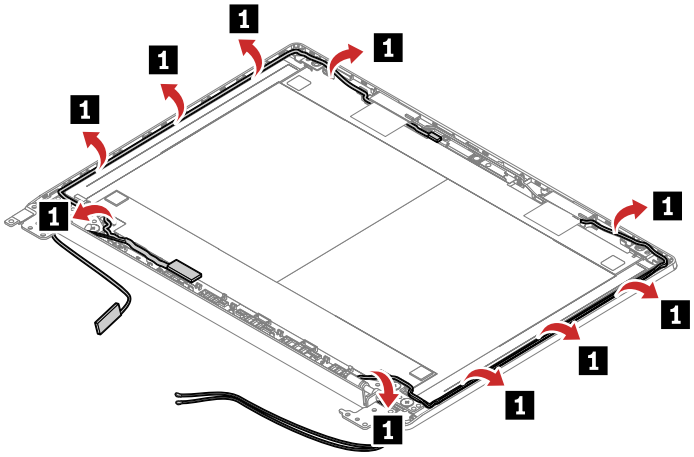

Figure 28. Remove cables

Step 2. Remove 8 screws.

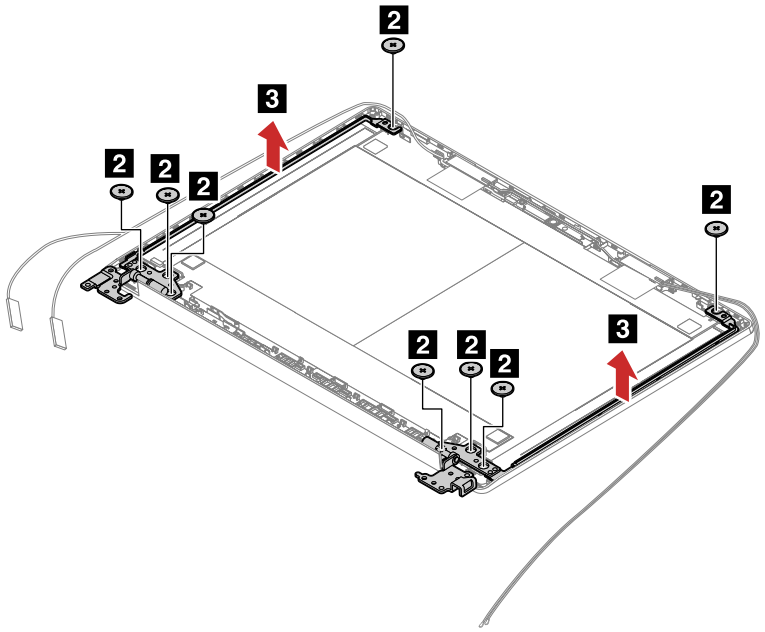

Screw specifications	Number of screws
M2.5 x 2.5	8

Figure 29. Remove 8 screws

Step 3. Remove the hinges.

Remove the camera cable

Make sure the following FRUs (or CRUs) have been removed.

- “Remove the lower case” on page 33
- “Remove the built in battery” on page 39
- “Remove the LCD unit” on page 43
- “Remove the LCD bezel” on page 48
- “Remove the LCD panel” on page 48

Step 1. Peel off the sticker.

Step 2. Detach the connector.

Step 3. Peel off the sticker secures the camera cable.

Step 4. Remove the camera cable.

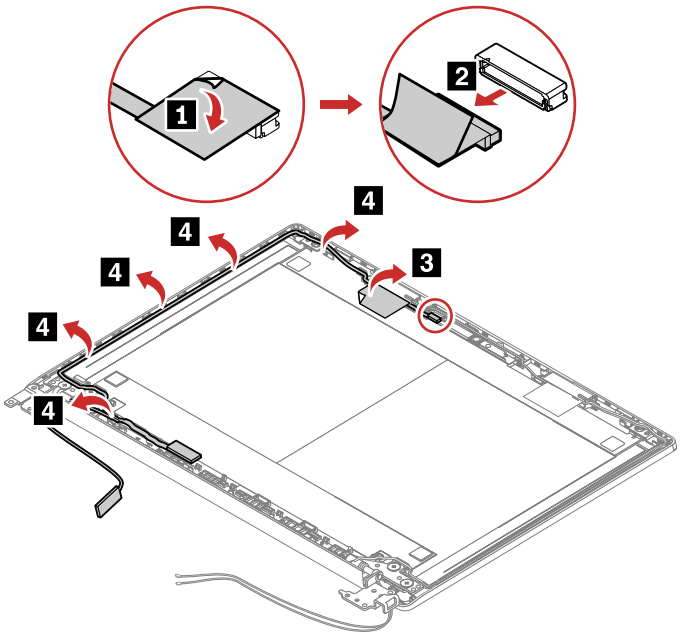

Figure 30. Peel off the sticker, detach the connector and remove the camera cable

Remove the camera board

Make sure the following FRUs (or CRUs) have been removed.

- “Remove the lower case” on page 33
- “Remove the built in battery” on page 39
- “Remove the LCD unit” on page 43
- “Remove the LCD bezel” on page 48
- “Remove the LCD panel” on page 48
- “Remove the camera cable” on page 51

Step 1. Peel off the sticker that secures the camera cable.

Step 2. Detach the connector.

Step 3. Remove the camera board.

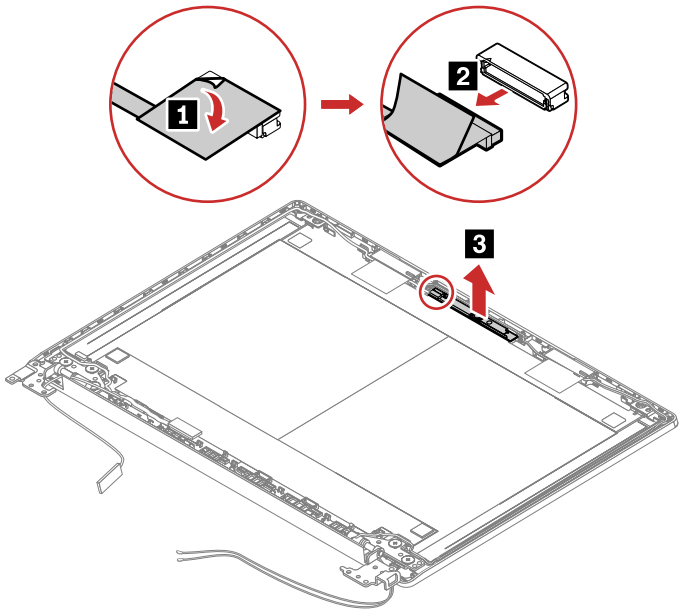

Figure 31. Remove the camera board

Remove the LCD cover

Make sure the following FRUs (CRUs) have been removed.

- “Remove the lower case” on page 33
- “Remove the built in battery” on page 39
- “Remove the LCD unit” on page 43
- “Remove the LCD bezel” on page 48
- “Remove the LCD panel” on page 48
- “Remove the camera cable” on page 51
- “Remove the camera board” on page 52

Trademarks

LENOVO, LENOVO logo, THINKPAD and THINKPAD logo are trademarks of Lenovo. Windows is trademark of the Microsoft group of companies. The terms HDMI and HDMI High-Definition Multimedia Interface are trademarks or registered trademarks of HDMI Licensing LLC in the United States and other countries. USB-C is a registered trademark of USB Implementers Forum. All other trademarks are the property of their respective owners.


Lenovo