P340 Tiny
User Guide



Read this first

Before using this documentation and the product it supports, ensure that you read and understand the following:

- Appendix B “Important safety information” on page 65
- *Safety and Warranty Guide*
- *Setup Guide*

Fourth Edition (November 2021)

© Copyright Lenovo 2020, 2021.

LIMITED AND RESTRICTED RIGHTS NOTICE: If data or software is delivered pursuant to a General Services Administration “GSA” contract, use, reproduction, or disclosure is subject to restrictions set forth in Contract No. GS-35F-05925.

Contents

About this documentation iii

Chapter 1. Meet your computer 1

Front 1
Rear 3
Features and specifications 5
Statement on USB transfer rate 6

Chapter 2. Get started with your computer 7

Get started with Ubuntu Desktop 7
Connect to networks 7
Connect to the wired Ethernet 7
Connect to Wi-Fi networks (for selected models) 8
Use multimedia 8
Use audio 8
Connect to an external display 8

Chapter 3. Explore your computer . . . 9

Manage power 9
Set power button behaviors 9
Set the power plan 9
Connect to a Bluetooth-enabled device (for selected models) 9
Use with a Tiny-In-One monitor 10
Purchase accessories 11

Chapter 4. Secure your computer and information 13

Lock the computer 13
Use passwords 13
Use computrace Agent software embedded in firmware (for selected models) 14
Use BIOS security solutions 14
Erase all storage drive data 15
Use the cover presence switch 15
Use Intel BIOS guard 15
Use Smart USB Protection 15

Chapter 5. UEFI BIOS 17

What is UEFI BIOS 17
Enter the BIOS menu 17
Navigate in the BIOS interface 17
Change the display language of UEFI BIOS 17
Change the display mode of UEFI BIOS 18
Set the system date and time 18
Change the startup sequence 18
Enable or disable the configuration change detection feature 19
Enable or disable the automatic power-on feature 19
Enable or disable the smart power-on feature . . . 19
Enable or disable the ErP LPS compliance mode . . 19
Change the ITS performance mode 20
Change BIOS settings before installing a new operating system 20
Update UEFI BIOS 21
Recover from a BIOS update failure 21
Clear CMOS 21

Chapter 6. RAID 23

What is RAID 23
RAID Level 23
Configure the system BIOS to enable SATA RAID functionality 23
Configure RAID in legacy mode 23

Chapter 7. Troubleshooting, diagnostics, and recovery 25

Basic procedure for resolving computer problems 25
Troubleshooting 25
Startup problems 26
Audio problems 26
Network problems 26
Performance problems 28
Storage drive problems 28
CD or DVD problems 29
Serial connector problems 30
USB device problems 30
Software problems 30
Lenovo diagnostic tools 30

Chapter 8. CRU replacement 33

What are CRUs 33
Replace a CRU 34
ac power adapter and power cord 34
Rear Wi-Fi antenna 36
Vertical stand 37
VESA mount bracket 39
External optical drive box and external optical drive 40
Power adapter bracket 41
Dust shield 44
Computer cover 45

© Copyright Lenovo 2020, 2021

Internal speaker 46
System fan 47
Coin-cell battery 48
PCIe card and PCIe converter 50
Wi-Fi card and Wi-Fi card shield 51
Bottom cover 53
M.2 solid-state drive 54
Memory module 56

Chapter 9. Help and support 59
Self-help resources 59
Call Lenovo 60
Before you contact Lenovo 60
Lenovo Customer Support Center 60
Purchase additional services 61

Appendix A. System memory speed 63

Appendix B. Important safety information 65

Appendix C. Accessibility and ergonomic information 79

Appendix D. Supplemental information about the Ubuntu operating system 81

Appendix E. Compliance and TCO Certified information 83

Appendix F. Notices and trademarks 93

About this documentation

- Illustrations in this documentation might look different from your product.
- Depending on the model, some optional accessories, features, and software programs might not be available on your computer.
- Depending on the version of operating systems and programs, some user interface instructions might not be applicable to your computer.
- Documentation content is subject to change without notice. Lenovo makes constant improvements on the documentation of your computer, including this *User Guide*. To get the latest documentation, go to: https://pcsupport.lenovo.com
- Canonical® makes periodic feature changes to the Ubuntu® operating system through Software Updates. As a result, some information in this documentation might become outdated. Refer to Ubuntu resources for the latest information.

© Copyright Lenovo 2020, 2021

Chapter 1. Meet your computer

Front

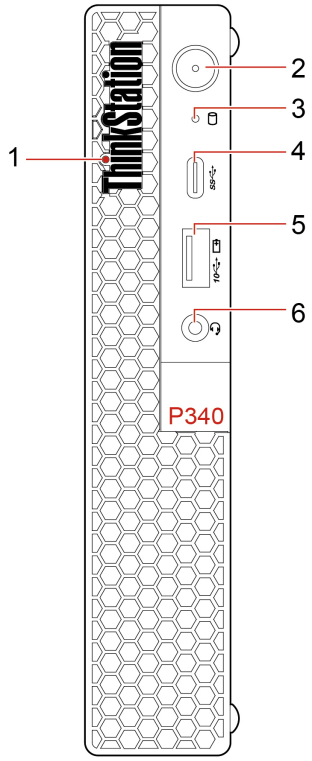

1. ThinkStation LED	The indicator is on when the computer is on.
2. Power button	Press to turn on the computer. To turn off the computer, open the system menu, click the power icon ⏻, and then select **Power Off**. The indicator in the power button shows the system status of your computer. • **On:** The computer is on. • **Off:** The computer is off or in hibernation mode. • **Blinking:** The computer is in sleep mode.
3. Storage drive activity indicator	This indicator is on when the storage drive is in use.
4. USB-C™ (3.2 Gen 1) connector	• Charge USB-C compatible devices with the output voltage and current of 5 V and 0.9 A. • Transfer data at USB 3.2 speed, up to 5 Gbps. • Connect to USB-C accessories to help expand your computer functionality. To purchase USB-C accessories, go to https://www.lenovo.com/accessories.

© Copyright Lenovo 2020, 2021

5. Always On USB 3.2 connector Gen 2	With the Always On USB feature enabled, the Always On USB 3.2 connector Gen 2 can charge a USB-compatible device when the computer is on, off, in sleep mode, or in hibernation mode. To enable the Always On USB feature, do the following: 1. Enter the UEFI BIOS menu. See “Enter the BIOS menu” on page 17. 2. Click **Devices → USB Setup → Front USB Ports → USB Port 2** to enable the Always On USB feature.
6. Headset connector	Connect a headset or headphones to your computer.

Rear

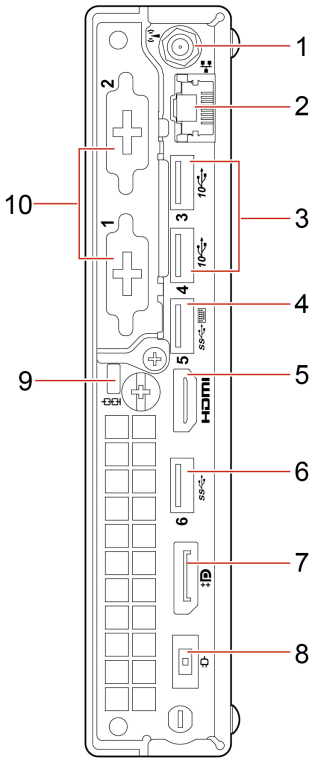

1. Wi-Fi® antenna slot*	Used to install the rear Wi-Fi antenna cable connector that is available only on some models. The rear Wi-Fi antenna is installed on the rear Wi-Fi antenna cable connector.
2. Ethernet connector	Connect to a local area network (LAN). When the green indicator is on, the computer is connected to a LAN. When the yellow indicator blinks, data is being transmitted.
3. USB 3.2 connectors Gen 2	Connect USB-compatible devices, such as a USB keyboard, USB mouse, USB storage device, or USB printer.
4. USB 3.2 connector Gen 1 (with smart power-on)	Connect USB-compatible devices, such as a USB keyboard, USB mouse, USB storage device, or USB printer. This connector supports the smart power-on feature. For more information, see “Enable or disable the smart power-on feature” on page 19.
5. HDMI™ 1.4 out connector	Send audio and video signals from the computer to another audio or video device, such as a high-performance monitor.
6. USB 3.2 connector Gen 1	Connect USB-compatible devices, such as a USB keyboard, USB mouse, USB storage device, or USB printer.
7. DisplayPort® 1.4 out connector	Send audio and video signals from the computer to another audio or video device, such as a high-performance monitor.
8. Power cord connector	Connect the ac power adapter to your computer for power supply.
9. Security-lock slot	Lock your computer to a desk, table, or other fixtures through a Kensington-style cable lock.
10. Optional connectors*	Depending on the computer model, the connectors might vary.

* for selected models

Features and specifications

Dimensions	• Width: 37 mm (1.5 inches) • Height: 179 mm (7 inches) • Depth: 182.9 mm (7.2 inches)
Weight (without the package)	Maximum configuration as shipped: 1.4 kg (3 lb)
Hardware configuration	1. Open the system menu from the top-right corner and click **Settings**. 2. Click **About**.
Power supply	Your computer comes with one of the following power supplies: • 170-watt automatic voltage-sensing power supply* • 230-watt automatic voltage-sensing power supply*
Electrical input	• Input voltage: From 100 V ac to 240 V ac • Input frequency: 50/60 Hz
Microprocessor	To view the microprocessor information of your computer, enter **Settings** and click **About**.
Memory	Up to two double data rate 4 (DDR4) non-error correction code (non-ECC) small outline dual in-line memory modules (SODIMMs)
Storage device	Up to two M.2 solid-state drives To view the storage drive capacity of your computer, use the **Disks** application. **Note:** The storage drive capacity indicated by the system is less than the nominal capacity.
Video features	• The integrated graphics card supports: – DisplayPort 1.4 out connector – HDMI 1.4 out connector – USB-C (3.2 Gen 1) connector* on rear panel – VGA-out connector* • The optional discrete graphics card provides an enhanced video experience and extended capabilities.
Audio features	The integrated audio card supports: • Headset connector • Internal speaker
Expansion	• Memory slots • M.2 solid-state drive slots • Optical drive*
Network features	• Ethernet LAN • Wireless LAN* • Bluetooth*

* for selected models

Statement on USB transfer rate

Depending on many factors such as the processing capability of the host and peripheral devices, file attributes, and other factors related to system configuration and operating environments, the actual transfer rate using the various USB connectors on this device will vary and will be slower than the data rate listed below for each corresponding device.

USB device	Data rate (Gbit/s)
3.2 Gen 1 / 3.1 Gen 1	5
3.2 Gen 2 / 3.1 Gen 2	10
3.2 Gen 2 × 2	20

Chapter 2. Get started with your computer

Get started with Ubuntu Desktop

Learn the basics of Ubuntu and start working with it right away. For more information about Ubuntu, see the Ubuntu documentation site at: https://help.ubuntu.com/lts/ubuntu-help/index.html.

The Gnome desktop is installed by default and is designed to be simple and easy to use. Details on using Gnome are available by launching the Help application or online at https://help.gnome.org/users/.

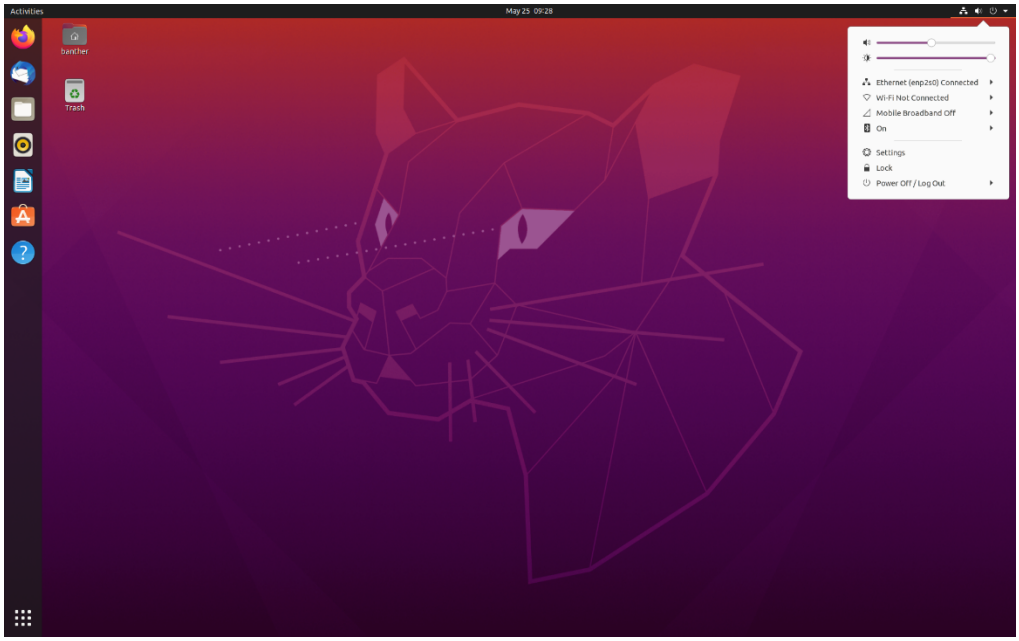

Launch an app

- Press the Super key (with the Windows logo) or open the Activities menu on the top left and type in the name of the application you want to launch.
- Click the **Show Applications** button on the lower left, and select the application you want to launch.

Launch settings

Open the system menu from the top-right corner and click **Settings**.

Connect to networks

Your computer helps you connect to the world through a wired or wireless network.

Connect to the wired Ethernet

Connect your computer to a local network through the Ethernet connector on your computer with an Ethernet cable.

© Copyright Lenovo 2020, 2021

Connect to Wi-Fi networks (for selected models)

If your computer includes a wireless LAN module, you can connect your computer to Wi-Fi® networks. The wireless LAN module on your computer may support different standards. For some countries or regions, use of 802.11ax may be disabled according to local regulations.

1. Open the system menu from the top-right corner and expand the Wi-Fi section of the menu.
2. Click **Select Network**. A list of available wireless networks is displayed.
3. Select a network available for connection. Provide required information, if needed.

Use multimedia

Use your computer for business or entertainment with the devices (such as a camera, a monitor, or speakers).

Use audio

To enhance the audio experience, connect speakers, headphones, or a headset to the audio connector.

Change the sound settings

1. Open the system menu from the top-right corner and click **Settings**.
2. Click **Sound**.
3. Change the settings as you prefer.

Connect to an external display

Connect to a wired display

Connect your computer to a projector or a monitor to give presentations or expand your workspace.

Display mode

Go to **Settings** → **Devices** → **Displays**. Then, select a display mode of your preference.

- **Join Displays**: Extend the video output from your primary display to the secondary display. You can drag and move items between two displays.
- **Mirror**: Display the same video output on both the primary display and the secondary display.
- **Single Display**: Display the video output on only one display attached.

Display arrangement

Go to **Settings** → **Devices** → **Displays**. Then, click **Primary Display** and select one of the displays as the primary display.

Change display settings

Go to **Settings** → **Devices** → **Displays**. Then, you can change the settings for both the primary display and other displays. You can change the resolution, orientation and refresh rate.

Chapter 3. Explore your computer

Manage power

Use the information in this section to achieve the best balance between performance and power efficiency.

Set power button behaviors

You can define what the power button does according to your preference. For example, by pressing the power button, you can turn off the computer or put the computer to sleep or hibernation mode.

To change what the power button does:

1. Open the system menu from the top-right corner and click **Settings**.
2. Click **Power**.
3. In the **Suspend & Power Button** section choose the power button action as you prefer.

Set the power plan

For ENERGY STAR® compliant computers, the following power plan takes effect when your computers have been idle for a specified duration:

Table 1. Default power plan (when plugged into ac power)

• Turn off the display: After 5 minutes • Put the computer to sleep: After 20 minutes

To awaken the computer from Sleep mode, press any key on your keyboard.

To reset the power plan to achieve the best balance between performance and power saving:

1. Open the system menu from the top-right corner and click **Settings**.
2. Click **Power**.
3. Choose or customize a power plan of your preference.

Connect to a Bluetooth-enabled device (for selected models)

You can connect all types of Bluetooth-enabled devices to your computer, such as a keyboard, a mouse, a smartphone, or speakers. To ensure that the connection is successful, place the devices 10 meters (33 feet), at most, from the computer.

1. Turn on Bluetooth on the computer.
   a. Open the system menu from the top-right corner and then click **Settings → Bluetooth**.
   b. In the Bluetooth section enable Bluetooth with the toggle button at the top.
2. Any discoverable devices will be shown in the **Devices** list.
3. Select a Bluetooth device, and then follow the on-screen instructions.

Your Bluetooth device and computer will automatically connect the next time if the two devices are in range of each other with Bluetooth turned on. You can use Bluetooth for data transfer or remote control and communication.

© Copyright Lenovo 2020, 2021

Use with a Tiny-In-One monitor

Note: When installing the computer to the TIO monitor, ensure that you use the ac power adapter that comes with the computer.

Primary video display output switching

The computer works with its integrated graphics card by default when it is installed to the TIO monitor. You can turn on or turn off the computer by pressing the power button on the TIO monitor. Any other devices connected to TIO monitor function the same as they are connected to the computer.

To switch the primary video display output from the integrated graphics card to the discrete graphics card, do the following:

1. Turn on or restart your computer.
2. Before the operating system starts up, repeatedly press and release F1 or Fn+F1 (depending on the keyboard settings) until the Setup Utility program opens. If a BIOS password has been set, enter the correct password when prompted.
3. Locate the **Select Active Video** submenu and select **PEG**. Then press F10 to save changes and exit.
4. Connect the discrete-graphic-card connector on the computer with the DisplayPort or HDMI connector of the TIO monitor using an applicable dongle.
5. Press the mode-switching button on the TIO monitor to change from the TIO mode to the DP mode or HDMI mode.

When the computer works with the discrete graphics card, pressing the power button on the TIO monitor only turns on or turns off the TIO monitor. Devices connected to the TIO monitor do not function the same as they are connected to the computer.

Intel Turbo Boost Technology

Intel Turbo Mode capability is designed to allow the processor to assess its own thermals, current, and power to come up with a dynamic upper limit on its frequency. This means that the processor can run at frequency higher than the advertised base frequency, and at any frequency in the inclusive range between maximum turbo frequency and the advertised base frequency at any time.

If the computer microprocessor is i9-10900, i9-10900T, i7-10700, i7-10700T, i5-10600, i5-10600T, i5-10500, i5-10500T, i5-10400, or i5-10400T, the computer does not support Intel Turbo mode when installed in one of the following TIO monitors:

- ThinkCentre TIO27 (MT: 10YF)
- ThinkCentre 超级Q27 (MT: 10YF)
- ThinkCentre TIO27q (MT: 10YG)
- ThinkCentre Tiny-in-One 22
- ThinkCentre Tiny-in-One 24
- ThinkCentre TIO22Gen3
- ThinkCentre 超级Q22Gen3
- ThinkCentre TIO22Gen3Touch
- ThinkCentre 超级Q22Gen3Touch
- ThinkCentre TIO24Gen3
- ThinkCentre 超级Q24Gen3
- ThinkCentre TIO24Gen3Touch

- ThinkCentre 超级Q24Gen3Touch

Purchase accessories

Lenovo has a number of hardware accessories and upgrades to help expand the capabilities of your computer. Options include memory modules, storage devices, network cards, power adapters, keyboards, mice, and more.

To shop at Lenovo, go to https://www.lenovo.com/accessories.

Chapter 4. Secure your computer and information

Lock the computer

Note: You are responsible for evaluating, selecting, and implementing the locking device and security feature. Lenovo makes no comments, judgments, or warranties about the function, quality, or performance of the locking device and security feature. You can purchase computer locks from Lenovo.

Kensington-style cable lock

Lock your computer to a desk, table, or other fixtures through a Kensington-style cable lock.

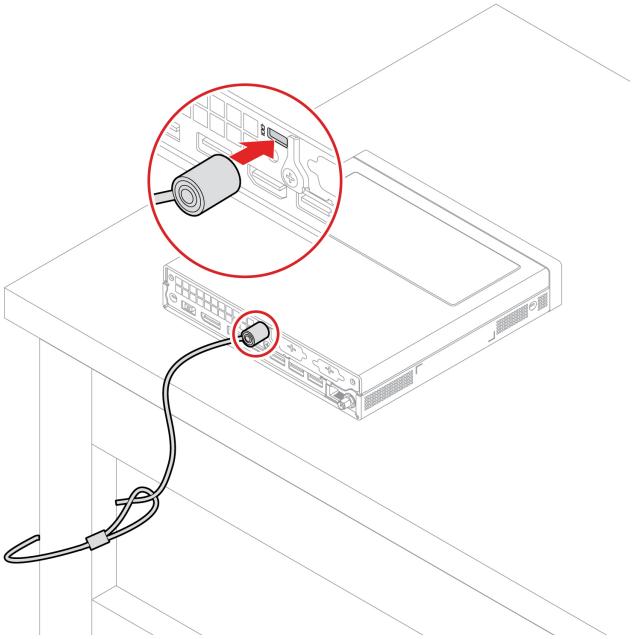

Use passwords

Password types

You can set the following passwords in UEFI (Unified Extensible Firmware Interface) BIOS (Basic Input/Output System) to prevent unauthorized access to your computer. However, you are not prompted to enter any UEFI BIOS password when your computer resumes from sleep mode.

- Power-on password

  When a power-on password is set, you are prompted to enter a valid password each time the computer is turned on. The computer cannot be used until the valid password is entered.

- Supervisor password

  Setting a supervisor password deters unauthorized users from changing configuration settings. If you are responsible for maintaining the configuration settings of several computers, you might want to set a supervisor password.

  When a supervisor password is set, you are prompted to enter a valid password each time you try to enter the BIOS menu.

© Copyright Lenovo 2020, 2021

If both the power-on password and supervisor password are set, you can enter either password. However, you must use your supervisor password to change any configuration settings.

- Hard disk password

  Setting a hard disk password prevents unauthorized access to the data on the storage drive. When a hard disk password is set, you are prompted to enter a valid password each time you try to access the storage drive.

  Note: After you set a hard disk password, your data on the storage drive is protected even if the storage drive is removed from one computer and installed in another.

- System management password (for selected models)

  You can enable the system management password to have the same authority as the supervisor password to control security related features. To customize the authority of the system management password through the UEFI BIOS menu:

  1. Restart the computer. When the logo screen is displayed, press F1 or Fn+F1.
  2. Select **Security → System Management Password Access Control**.
  3. Follow the on-screen instructions.

  If you have set both the supervisor password and the system management password, the supervisor password overrides the system management password.

Set, change, and remove a password

Before you start, print these instructions.

1. Restart the computer. When the logo screen is displayed, press F1 or Fn+F1.
2. Select **Security**.
3. Depending on the password type, select **Set Supervisor Password**, **Set Power-On Password**, **Set System Management Password**, or **Hard Disk Password** and press Enter.
4. Follow the on-screen instructions to set, change, or remove a password.
5. Press F10 or Fn+F10 to save the changes and exit.

You should record your passwords and store them in a safe place. If you forget the passwords, see “Clear CMOS” on page 21 to remove them by yourself. You can also contact a Lenovo-authorized service provider to have the passwords removed.

Notes:

- If the supervisor password is forgotten, it might not be removed by clearing CMOS depending on your BIOS settings.
- If the hard disk password is forgotten, Lenovo cannot remove the password or recover data from the storage drive.

Use computrace Agent software embedded in firmware (for selected models)

The Computrace Agent software is an IT asset management and computer theft recovery solution. The software detects if changes have been made on the computer, such as hardware, software, or the computer call-in location. You might have to purchase a subscription to activate the Computrace Agent software.

Use BIOS security solutions

This section provides BIOS solutions to secure your computer and information.

Erase all storage drive data

It is recommended that you erase all storage drive data before recycling a storage drive or the computer.

To erase all storage drive data:

1. Set a hard disk password for the storage drive you will recycle. See “Use passwords” on page 13.
2. Restart the computer. When the logo screen is displayed, press F1 or Fn+F1.
3. Select **Security → Hard Disk Password → Security Erase HDD Data** and press Enter.
4. Select the storage drive you will recycle and press Enter.
5. A message is displayed, prompting you to confirm the operation. Select **Yes** and press Enter. The erasing process begins.

   Note: During the erasing process, the power button and the keyboard are disabled.
6. After the erasing process is completed, a message is displayed, prompting you to reset the system. Select **Continue**.

   Note: Depending on the storage drive capacity, the erasing process will take half an hour to three hours.
7. After the resetting process is completed, one of the following will happen:
   - If the data on the system storage drive is erased, you will be prompted that no operating system is available.
   - If the data on the non-system storage drive is erased, the computer restarts automatically.

Use the cover presence switch

The cover presence switch prevents the computer from logging in to the operating system when the computer cover is not properly installed or closed.

To enable the cover presence switch connector on the system board:

1. Restart the computer. When the logo screen is displayed, press F1 or Fn+F1.
2. Select **Security → Cover Tamper Detected** and press Enter.
3. Select **Enabled** and press Enter.
4. Press F10 or Fn+F10 to save the changes and exit.

When the cover presence switch connector on the system board is enabled, if the cover presence switch detects that the computer cover is not correctly installed or closed, an error message will be displayed when you turn on the computer. To bypass the error message and log in to the operating system:

1. Properly install or close the computer cover.
2. Enter the BIOS menu, save and then exit.

Use Intel BIOS guard

The BIOS guard module cryptographically verifies all the BIOS updates to the system BIOS flash. Therefore, the malware is blocked from attacking the BIOS.

Use Smart USB Protection

The Smart USB Protection function is a security function that helps prevent data from being copied from the computer to USB storage devices connected to the computer. You can set the Smart USB Protection function to one of the following modes:

- **Disabled** (default setting): You can use the USB storage devices without limitation.

- **Read Only**: You cannot copy data from the computer to the USB storage devices. However, you can access or modify data on the USB storage devices.
- **No Access**: You cannot access the USB storage devices from the computer.

To configure the Smart USB Protection function:

1. Restart the computer. When the logo screen is displayed, press F1 or Fn+F1.
2. Select **Security → Smart USB Protection** and press Enter.
3. Select the desired setting and press Enter.
4. Press F10 or Fn+F10 to save the changes and exit.

Chapter 5. UEFI BIOS

This chapter provides information about configuring and updating UEFI BIOS, and clearing CMOS.

What is UEFI BIOS

Note: The operating system settings might override any similar settings in UEFI BIOS.

UEFI BIOS is the first program that the computer runs when the computer is turned on. UEFI BIOS initializes the hardware components and loads the operating system and other programs. Your computer comes with a setup program with which you can change UEFI BIOS settings.

Enter the BIOS menu

Restart the computer. When the logo screen is displayed, press F1 or Fn+F1 to enter the BIOS menu.

Note: If you have set BIOS passwords, enter the correct passwords when prompted. You also can select **No** or press Esc to skip the password prompt and enter the BIOS menu. However, you cannot change the system configurations that are protected by passwords.

Navigate in the BIOS interface

Attention: The default configurations are already optimized for you in **boldface**. Improper change of the configurations might cause unexpected results.

Depending on your keyboard, you can navigate in the BIOS interface by pressing the following keys, or combinations of Fn and the following keys:

F1 or Fn+F1	Display the General Help screen.
Esc or Fn+Esc	Exit the submenu and return to the parent menu.
↑ ↓ or Fn+↑ ↓	Locate an item.
← → or Fn+← →	Select a tab.
+/– or Fn++/–	Change to a higher or lower value.
Enter	Enter the selected tab or submenu.
F9 or Fn+F9	Restore to the default settings.
F10 or Fn+F10	Save your configuration and exit.

Change the display language of UEFI BIOS

UEFI BIOS supports three or four display languages: English, French, simplified Chinese, and Russian (for selected models).

To change the display language of UEFI BIOS:

1. Select **Main → Language** and press Enter.
2. Set the display language as desired.

© Copyright Lenovo 2020, 2021

Change the display mode of UEFI BIOS

You can use UEFI BIOS in the graphic mode or the text mode according to your needs.

To change the display mode of UEFI BIOS:

1. Restart the computer. When the logo screen is displayed, press F1 or Fn+F1.
2. Select **Main → Setup Mode Select** and press Enter.
3. Set the display mode as desired.

Set the system date and time

1. Restart the computer. When the logo screen is displayed, press F1 or Fn+F1.
2. Select **Main → System Time & Date** and press Enter.
3. Set the system date and time as desired.
4. Press F10 or Fn+F10 to save the changes and exit.

Change the startup sequence

If the computer does not start up from a device as expected, you can change the startup device sequence permanently or select a temporary startup device.

Change the startup device sequence permanently

1. Depending on the type of the storage device, do one of the following:
   - If the storage device is internal, go to step 2.
   - If the storage device is a disc, ensure that the computer is on or turn on the computer. Then, insert the disc into the optical drive.
   - If the storage device is an external device other than a disc, connect the storage device to the computer.
2. Restart the computer. When the logo screen is displayed, press F1 or Fn+F1.
3. Select **Startup**, and then follow the on-screen instructions to change the startup sequence.
4. Press F10 or Fn+F10 to save the changes and exit.

Select a temporary startup device

Note: Not all discs and storage drives are bootable.

1. Depending on the type of the storage device, do one of the following:
   - If the storage device is internal, go to step 2.
   - If the storage device is a disc, ensure that the computer is on or turn on the computer. Then, insert the disc into the optical drive.
   - If the storage device is an external device other than a disc, connect the storage device to the computer.
2. Restart the computer. When the logo screen is displayed, press F12 or Fn+F12.
3. Select the storage device as desired and press Enter.

If you want to change the startup device sequence permanently, select **Enter Setup** on Startup Device Menu and press Enter to enter the BIOS menu.

Enable or disable the configuration change detection feature

If you enable configuration change detection, when the POST detects configuration changes of some hardware devices (such as storage drives or memory modules), an error message will be displayed when you turn on the computer.

To enable or disable the configuration change detection feature:

1. Restart the computer. When the logo screen is displayed, press F1 or Fn+F1.
2. Select **Security → Configuration Change Detection** and press Enter.
3. Enable or disable the feature as desired.
4. Press F10 or Fn+F10 to save the changes and exit.

To bypass the error message and log in to the operating system, press F2 or Fn+F2. To clear the error message, enter the BIOS menu, save and then exit.

Enable or disable the automatic power-on feature

The Automatic Power On item in UEFI BIOS provides various options for you to make your computer start up automatically.

To enable or disable the automatic power-on feature:

1. Restart the computer. When the logo screen is displayed, press F1 or Fn+F1.
2. Select **Power → Automatic Power On** and press Enter.
3. Select the feature as desired and press Enter.
4. Enable or disable the feature as desired.
5. Press F10 or Fn+F10 to save the changes and exit.

Enable or disable the smart power-on feature

Ensure that the keyboard is connected to a USB connector supporting the smart power-on feature. With the smart power-on feature enabled, you can start up or wake up the computer from the hibernation mode by pressing Alt+P.

To enable or disable the smart power-on feature:

1. Restart the computer. When the logo screen is displayed, press F1 or Fn+F1.
2. Select **Power → Smart Power On** and press Enter.
3. Enable or disable the feature as desired.
4. Press F10 or Fn+F10 to save the changes and exit.

Enable or disable the ErP LPS compliance mode

Lenovo computers meet the eco-design requirements of the ErP Lot 3 regulation. For more information, go to:
https://www.lenovo.com/us/en/compliance/eco-declaration

You can enable the ErP LPS compliance mode to reduce the consumption of electricity when the computer is off or in sleep mode.

To enable or disable the ErP LPS compliance mode:

1. Restart the computer. When the logo screen is displayed, press F1 or Fn+F1.
2. Select **Power → Enhanced Power Saving Mode** and press Enter.
3. Depending on whether you select **Enabled** or **Disabled**, do one of the following:
   - If you select **Enabled**, press Enter. Then, select **Power → Automatic Power On** and press Enter. Check whether the Wake on LAN feature is disabled automatically. If no, disable it.
   - If you select **Disabled**, press Enter. Then, go to the next step.
4. Press F10 or Fn+F10 to save the changes and exit.

When the ErP LPS compliance mode is enabled, you can wake up the computer by doing one of the following:

- Press the power button.
- Enable the Wake Up on Alarm feature to make the computer wake up at a set time.

Change the ITS performance mode

You can adjust the acoustic and thermal performance of your computer by changing the ITS performance mode. Three choices are available:

- **Best Performance** (default setting): The computer works at the best system performance with normal acoustic level.
- **Best Experience**: The computer works at the best experience with balanced noise and better performance.
- **Full Speed**: All fans in the computer will run at full speed.

To change the ITS performance mode:

1. Restart the computer. When the logo screen is displayed, press F1 or Fn+F1.
2. Select **Power → Intelligent Cooling** and press Enter.
3. Select **Performance Mode** and press Enter.
4. Set the performance mode as desired.
5. Press F10 or Fn+F10 to save the changes and exit.

Change BIOS settings before installing a new operating system

BIOS settings vary by operating system. Change the BIOS settings before installing a new operating system.

To change the BIOS settings:

1. Restart the computer. When the logo screen is displayed, press F1 or Fn+F1.
2. From the main interface, select **Security → Secure Boot** and press Enter.
3. Depending on the operating system to be installed, do one of the following:
   - To install the Windows 10 (64-bit) and many Linux operating systems, select **Enabled** for **Secure Boot**.
   - To install an operating system that does not support secure boot, select **Disabled** for **Secure Boot**.
4. Press F10 or Fn+F10 to save the changes and exit.

Update UEFI BIOS

When you install a new program, device driver, or hardware component, you might need to update UEFI BIOS. You can update the BIOS from your operating system or a flash update disc (supported only on selected models).

Download and install the latest UEFI BIOS update package by one of the following methods:

- Using the built-in software update service:

  Ubuntu software update will check the LVFS site for any firmware updates and notify you when updates are available.
- From the Lenovo Support Web site:
  1. Go to https://pcsupport.lenovo.com.
  2. Download the flash BIOS update driver for the operating system version or the ISO image version (used to create a flash update disc). Then, download the installation instructions for the flash BIOS update driver you have downloaded.
  3. Print the installation instructions and follow the instructions to update the BIOS.

Recover from a BIOS update failure

1. Remove all media from the drives and turn off all connected devices.
2. Insert the BIOS update disc into the optical drive, and then turn off the computer.
3. Disconnect all power cords from electrical outlets. Then, remove any parts that impede access to the Clear CMOS /Recovery jumper.
4. Move the jumper from the standard position to the maintenance position.
5. Reconnect the power cords for the computer and the monitor to electrical outlets.
6. Turn on the computer and the monitor. When the computer beeps, the recovery process begins.
7. After the recovery process is completed, the computer will be turned off automatically.

   Note: Depending on the computer model, the recovery process will take two to three minutes.
8. Disconnect all power cords from electrical outlets.
9. Move the jumper back to the standard position.
10. Reinstall all the parts that have been removed. Then, reconnect the power cords for the computer and the monitor to electrical outlets.
11. Turn on the computer and the monitor. When the logo screen is displayed, press F1 or Fn+F1.
12. To prevent data loss, ensure that BIOS settings are restored to an earlier point. For BIOS configurations, see Chapter 5 “UEFI BIOS” on page 17.

Clear CMOS

1. Remove all media from the drives and turn off all connected devices and the computer.
2. Disconnect all power cords from electrical outlets. Then, remove any parts that impede access to the Clear CMOS /Recovery jumper.
3. Move the jumper from the standard position to the maintenance position.
4. Reconnect the power cords for the computer and the monitor to electrical outlets.
5. Turn on the computer and the monitor. When the computer beeps, wait for approximately 10 seconds.
6. Turn off the computer by holding the power button for approximately four seconds.
7. Disconnect all power cords from electrical outlets.

8. Move the jumper back to the standard position.
9. Reinstall all the parts that have been removed. Then, reconnect the power cords for the computer and the monitor to electrical outlets.
10. Turn on the computer and the monitor. When the logo screen is displayed, press F1 or Fn+F1.
11. To prevent data loss, ensure that BIOS settings are restored to an earlier point. For BIOS configurations, see Chapter 5 “UEFI BIOS” on page 17.

Chapter 6. RAID

What is RAID

Redundant Array of Independent Disks (RAID) is a technology that provides increased storage functions and reliability through redundancy. It also can improve data storage reliability and fault tolerance compared with single-drive storage systems. Data loss resulting from a drive failure can be prevented by reconstructing missing data from the remaining drives.

When a group of independent physical storage drives is set up to use RAID technology, they are in a RAID array. This array distributes data across multiple storage drives, but the array appears to the host computer as one single storage unit. Creating and using RAID arrays provides high performance, such as the expedited I/O performance, because several drives can be accessed simultaneously.

RAID Level

Your computer must have the minimum number of SATA storage drives installed for the supported level of RAID:

- RAID 0: striped disk array
  - Consists of at least two SATA storage drives
  - Supported strip size: 4 KB, 8 KB, 16 KB, 32 KB, 64 KB, or 128 KB
  - Better performance without fault tolerance
- RAID 1: mirrored disk array
  - Consists of two SATA storage drives
  - Improved reading performance and 100% redundancy

Configure the system BIOS to enable SATA RAID functionality

To enable SATA RAID functionality:

1. Restart the computer. When the logo screen is displayed, press F1 or Fn+F1.
2. Select **Devices → ATA Drive Setup** and press Enter.
3. Select **Configure SATA as** and press Enter.
4. Select **RAID** and press Enter.
5. Press F10 or Fn+F10 to save the changes and exit.

Configure RAID in legacy mode

This section provides instructions on how to configure RAID in legacy mode.

Create RAID volumes in legacy mode

To create RAID volumes:

1. Press Ctrl+I when prompted to enter the Intel (R) Rapid Storage Technology configuration utility during the computer startup.
2. Use the up and down arrow keys to select **Create RAID Volume** and press Enter.
3. Type a proper RAID Volume name in the **Name** field and press Tab.

© Copyright Lenovo 2020, 2021

4. Use the arrow keys to select a RAID level in the **RAID Level** field and press Tab.
5. If appropriate, use the arrow keys to select a Stripe Size in the **Stripe Size** field and press Tab.
6. Type a volume size in the **Capacity** field and press Tab.
7. Press Enter to initiate volume creation.
8. When prompted, press Y to accept the warning message and create the volume.
9. Return to step 2 to create additional RAID volumes, or select **Exit** and press Enter.
10. Press Y when prompted to confirm the exit.

Delete RAID volumes in legacy mode

To delete RAID volumes:

1. Press Ctrl+I when prompted to enter the Intel (R) Rapid Storage Technology configuration utility during the computer startup.
2. Use the up and down arrow keys to select **Delete RAID Volume** and press Enter.
3. Use the arrow keys to select the RAID volume to be deleted and press Delete.
4. When prompted, press Y to confirm the deletion of the selected RAID volume. Deleting a RAID volume will reset the storage drives to non-RAID.

Reset storage drives to non-RAID in legacy mode

To reset your storage drives to non-RAID:

1. Press Ctrl+I when prompted to enter the Intel (R) Rapid Storage Technology configuration utility during the computer startup.
2. Use the up and down arrow keys to select **Reset Disks to Non-RAID** and press Enter.
3. Use the arrow keys and the space key to mark individual physical storage drives to be reset, and then press Enter to complete the selection.
4. When prompted, press Y to confirm the reset action.

Chapter 7. Troubleshooting, diagnostics, and recovery

This chapter provides solutions to resolve computer problems. Use the basic procedure as a starting point for resolving computer problems.

Basic procedure for resolving computer problems

Prerequisite

Before you start, read Appendix B “Important safety information” on page 65 and print the following instructions.

1. Check that:
   a. The cables for all connected devices are connected correctly and securely.
   b. All components have been reassembled correctly.
   c. All connected devices that require ac power are connected to properly grounded and working electrical outlets.
   d. All connected devices are enabled in UEFI BIOS.
2. Use an antivirus program (if any) to see if the computer has been infected by a virus. If the program detects a virus, remove the virus.
3. See Chapter 7 “Troubleshooting, diagnostics, and recovery” on page 25 to resolve the problem you are experiencing, run the diagnostic program, and recover your operating system.
4. If the problem persists, contact Lenovo. See Chapter 9 “Help and support” on page 59.

Troubleshooting

Use the troubleshooting information to find solutions to problems that have definite symptoms.

© Copyright Lenovo 2020, 2021

Startup problems

Problem	Solution
The computer does not start up when you press the power button.	• Ensure that the power cord is correctly connected to the rear of the computer and to a working electrical outlet. • If the computer has a secondary power switch on the rear of the computer, ensure that it is switched on. • The power indicator on the front of the computer is on. • The computer voltage matches the voltage available at the electrical outlet for your country or region.
The operating system does not start up from the correct storage drive or fails to start up	• Ensure that all storage drive signal cables and power cables are connected correctly. • Ensure that the storage drive the computer starts up from is listed as the first startup device in UEFI BIOS. • In rare cases, the storage drive with the operating system might get corrupted or damaged. In such cases, you might need to replace the storage drive. • Optane memory is not currently supported with Linux.
The computer beeps multiple times before the operating system starts up.	Ensure that no keys are stuck.

Audio problems

Problem	Solution
The sound comes from one of the external speakers.	• Ensure that the speaker cable is inserted completely into the connector on the computer. • Ensure that the cable that connects the left speaker to the right speaker is securely connected. • Ensure that the balance settings are set correctly.

Network problems

Note: The Wi-Fi® and Bluetooth features are optional.

Problem	Solution
The computer cannot connect to an Ethernet LAN.	• Connect the cable from the Ethernet connector to the RJ45 connector of the hub. • Enable the Ethernet LAN feature in UEFI BIOS. • Enable the Ethernet LAN adapter. 1. Go to **Settings** and select **Network**. 2. Ensure the **Ethernet** option is enabled. • Update or reinstall the Ethernet LAN driver. • Install all networking software that is necessary for your network environment. Check with your LAN administrator for the necessary networking software. • Set the same duplex for the switch port and the adapter. If you configured the adapter for full duplex, ensure that the switch port is also configured for full duplex. Setting a wrong duplex mode might degrade performance, cause data loss, or result in lost connections.
When a Gigabit Ethernet model computer is used at a speed of 1000 Mbps, the Ethernet LAN connection fails or errors occur.	Connect the network cable to the Ethernet connector using Category 5 wiring and a 100 BASE-T hub/switch (not 100 BASE-X).
The Wake On LAN (WOL) feature does not work.	Enable the Wake On LAN feature in UEFI BIOS.
The Wi-Fi feature does not work.	• Enable the Wi-Fi feature in UEFI BIOS. • Enable all Wi-Fi devices. 1. Launch **Settings** and choose **Wi-Fi**. 2. Make sure that Wi-Fi is enabled by the toggle at the top. 3. Select the settings cog next to each Wi-Fi device, and make sure that it is configured and enabled. • Update or reinstall the Wi-Fi driver.
The Bluetooth feature does not work.	• Enable the Bluetooth feature in UEFI BIOS. • Enable all Bluetooth devices. 1. Launch **Settings** and choose **Bluetooth**. 2. Make sure that Bluetooth is enabled by the toggle button at the top. 3. Click on each device to enable and start pairing. • Update or reinstall the Bluetooth driver.
Sound does not come from the Bluetooth headset or headphones.	Select the Bluetooth headset or headphones as the default audio output device in sound settings.

Performance problems

Problem	Solution
The free storage drive space is insufficient.	• Clean out your Inbox, Sent Items, and Deleted Items folders from your e-mail application. • Clean up your C drive. 1. Launch the **Disk Usage Analyzer** application. 2. Select the drive to analyze. 3. Use the results to track down where your space is being used and clean up appropriately.
The free memory space is insufficient.	• Launch the **System Monitor** application. • Use the Memory column to determine which processes are using memory and can be ended.

Storage drive problems

Problem	Solution
Some or all storage drives are missing from the BIOS menu.	• Ensure that the signal cables and power cables for all the storage drives are connected correctly. • Ensure that the computer is configured correctly to support the storage drives. – If the computer is installed with SATA storage drives, ensure that the SATA storage drive enablement module (one to five storage drives) is installed. – If the computer is installed with SAS storage drives, ensure that the SAS storage drive enablement module (one to five storage drives) or the LSI MegaRAID SAS adapter is installed.

CD or DVD problems

Problem	Solution
A CD or DVD does not work.	• Ensure that the optical drive supports the CD or DVD. • Ensure that the disc is inserted correctly, with its label up. • Ensure that the disc you are using is clean. To remove dust or fingerprints, wipe the disc clean with a soft cloth from the center to the outside. Wiping a disc in a circular motion might cause loss of data. • Ensure that the power cable and signal cable are securely connected to the drive. • Ensure that the disc you are using is not scratched or damaged. Try inserting another disc that you know works. • If you have multiple CD or DVD drives installed (or a combination of CD and DVD drives), try inserting the disc into the other drive. In some cases, only one of the drives is connected to the audio subsystem.
A bootable recovery medium, such as the Product Recovery CD, cannot be used to start your computer.	Ensure that the CD or DVD drive is set as the top priority of the boot priority order in UEFI BIOS. **Note:** On some computer models, the startup sequence is permanently set and cannot be changed.
A black screen is displayed instead of the DVD video.	• Restart the DVD player program. • Try a lower screen resolution or color depth. • Close any open files, and then restart the computer.
A DVD movie does not play.	• Ensure that the disc surface is clean and not scratched. • Check the disc or packaging for regional coding. You might need to purchase a disc with coding for the region where you are using the computer.
No audio or only an intermittent audio comes out while a DVD movie is playing.	• Check the volume control settings on the computer and on your speakers. • Ensure that the disc surface is clean and not scratched. • Check all cable connections to and from the speakers. • Use the DVD menu for the video to select a different audio track.
The playback is slow or choppy.	• Disable any background programs that are using CPU or memory resources. • Ensure that video resolution is less than 1152 x 864 pixels.
A message indicating invalid disc or no disc found is displayed.	• Ensure that the disc is in the drive with the shiny side of the disc facing down. • Ensure that video resolution is less than 1152 x 864 pixels. • Ensure that the DVD or CD is inserted into an appropriate optical drive. For example, do not insert a DVD into a CD-only drive.

Serial connector problems

Problem	Solution
The serial connector cannot be accessed.	• Connect the serial cable from the serial connector on the computer to the serial device. If the serial device has its own power cord, connect the power cord to a grounded electrical outlet. • Turn on the serial device and keep the device online. • Install any programs supplied with the serial device. Refer to the documentation that comes with the serial device for more information. • If you added one serial-connector adapter, ensure that the adapter is installed correctly.

USB device problems

Problem	Solution
A USB device cannot be accessed.	• Connect the USB cable from the USB connector to the USB device. If the USB device has its own power cord, connect the power cord to a grounded electrical outlet. • Turn on the USB device and keep the device online. • Install any device drivers or programs supplied with the USB device. Refer to the documentation that comes with the USB device for more information. • Disconnect and reconnect the USB connector to reset the USB device. • Ensure that the Smart USB Protection function is disabled in UEFI BIOS.

Software problems

Problem	Solution
Some programs do not work as expected.	1. Check whether the problem is caused by a program. a. Ensure that the software is compatible with the computer. Refer to the information supplied with the software for more information. b. Verify that other software works correctly on the computer. c. Verify that the software you are using works on another computer. 2. If the problem is caused by a program: • Refer to the printed documentation that comes with the program or the help system of the program. • Update the program. • Uninstall the program and then reinstall it. To download a program that is preinstalled on your computer, go to https://pcsupport.lenovo.com and follow the on-screen instructions.

Lenovo diagnostic tools

For information about Lenovo diagnostic tools, go to:

https://pcsupport.lenovo.com/lenovodiagnosticsolutions

Chapter 8. CRU replacement

What are CRUs

Customer Replaceable Units (CRUs) are parts that can be upgraded or replaced by the customer. Lenovo computers contain the following types of CRUs:

- **Self-service CRUs:** Refer to parts that can be installed or replaced easily by customer themselves or by trained service technicians at an additional cost.
- **Optional-service CRUs:** Refer to parts that can be installed or replaced by customers with a greater skill level. Trained service technicians can also provide service to install or replace the parts under the type of warranty designated for the customer's machine.

If you intend on installing the CRU, Lenovo will ship the CRU to you. CRU information and replacement instructions are shipped with your product and are available from Lenovo at any time upon request. You might be required to return the defective part that is replaced by the CRU. When return is required: (1) return instructions, a prepaid shipping label, and a container will be included with the replacement CRU; and (2) you might be charged for the replacement CRU if Lenovo does not receive the defective CRU within thirty (30) days of your receipt of the replacement CRU. For full details, see the Lenovo Limited Warranty documentation at:
https://www.lenovo.com/warranty/llw_02

Refer to the following CRU list for your computer.

Self-service CRUs

- Keyboard*
- Mouse*
- ac power adapter
- Power cord
- Rear Wi-Fi antenna*
- Vertical stand*
- VESA® mount bracket*
- External optical drive*
- External optical drive box*
- Power adapter bracket*
- Dust shield*
- Computer cover
- Internal speaker
- Bottom cover
- M.2 solid-state drive
- Memory module

Optional-service CRUs

- System fan
- Coin-cell battery
- PCIe card*

© Copyright Lenovo 2020, 2021

- PCIe converter*
- Wi-Fi card*
- Wi-Fi card shield*

* for selected models

Replace a CRU

Follow the replacement procedure to replace a CRU.

ac power adapter and power cord

Prerequisite

Before you start, read Appendix B “Important safety information” on page 65 and print the following instructions.

Replacement procedure

1. Turn off the computer and remove all connected devices.
2. Disconnect the computer from ac power and all connected cables.
3. Remove the ac power adapter.

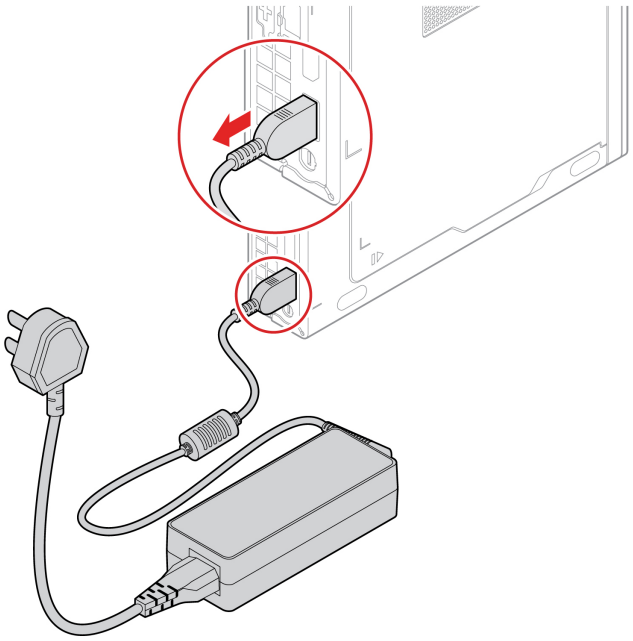

4. Remove the power cord.

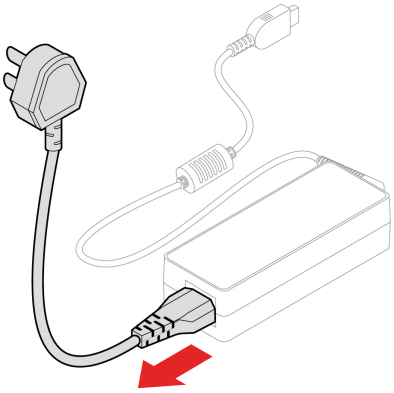

5. Install the power cord.

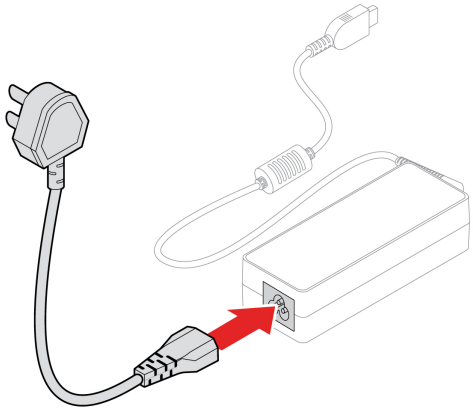

6. Install the ac power adapter.

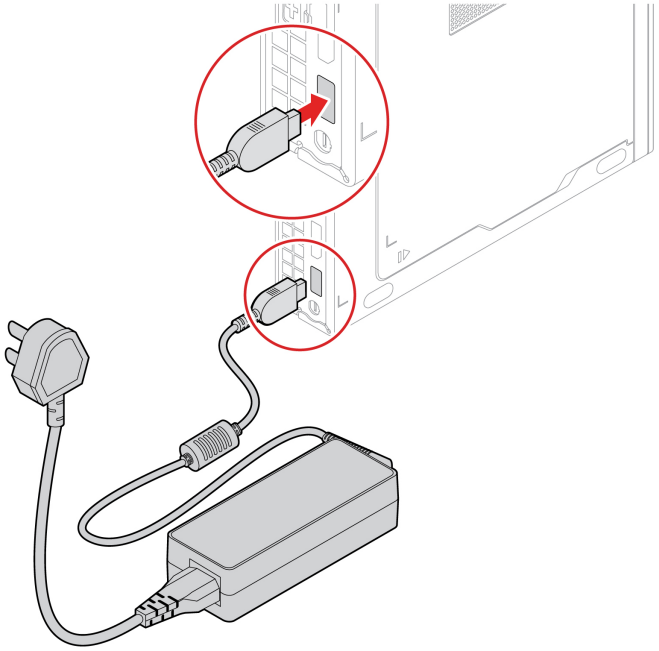

7. Reconnect the external cables to the corresponding connectors on the computer, and then reconnect the power cord to the electrical outlet.

Rear Wi-Fi antenna

Prerequisite

Before you start, read Appendix B “Important safety information” on page 65 and print the following instructions.

Replacement procedure

1. Turn off the computer and remove all connected devices.
2. Disconnect the computer from ac power and all connected cables.

3. Remove the rear Wi-Fi antenna.

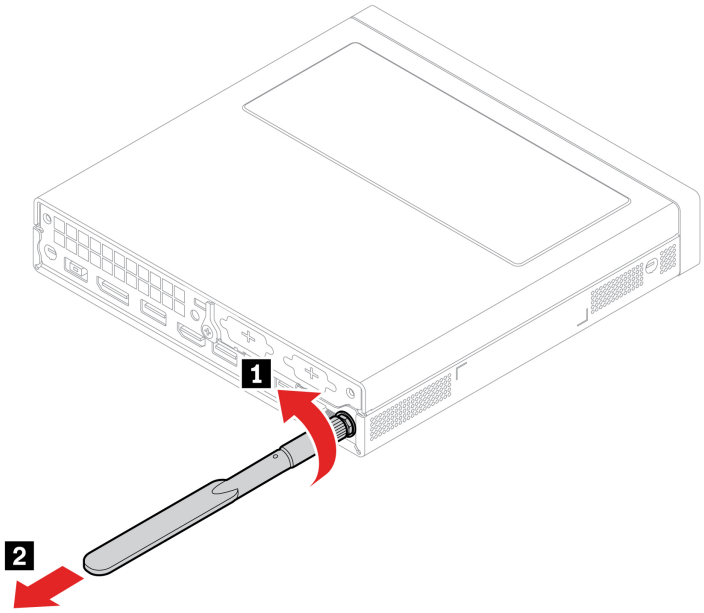

4. Install the rear Wi-Fi antenna.

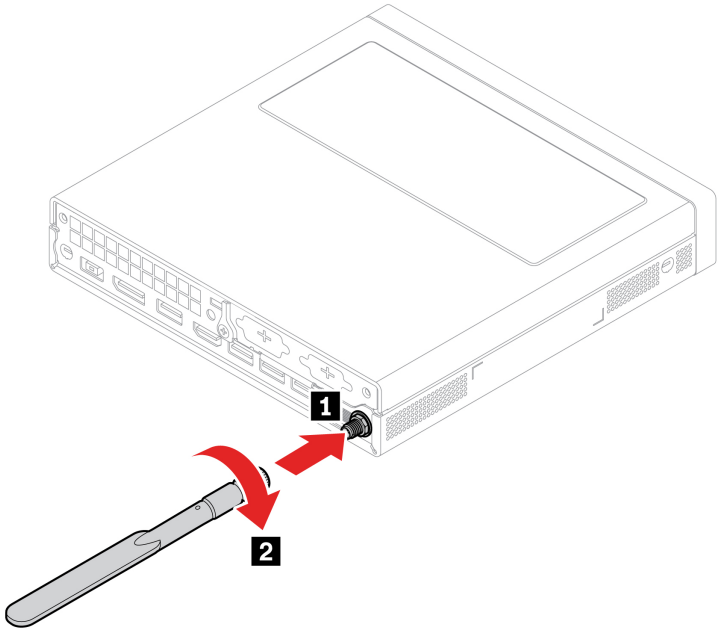

5. Reconnect the external cables to the corresponding connectors on the computer, and then reconnect the power cord to the electrical outlet.

Vertical stand

Prerequisite

Before you start, read Appendix B “Important safety information” on page 65 and print the following instructions.

Replacement procedure

1. Turn off the computer and remove all connected devices.
2. Disconnect the computer from ac power and all connected cables.
3. Remove the vertical stand.

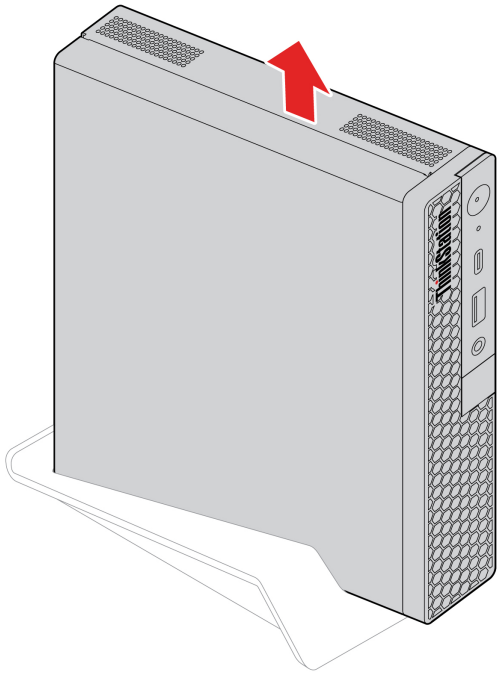

4. Install the vertical stand.

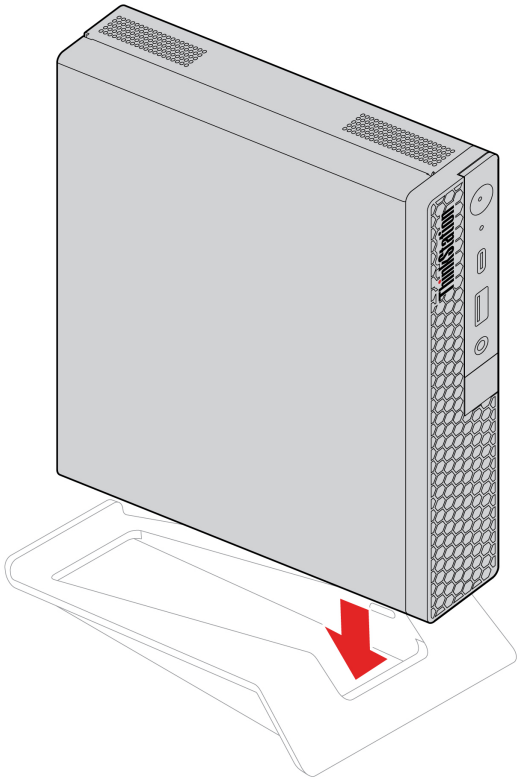

5. Reconnect the external cables to the corresponding connectors on the computer, and then reconnect the power cord to the electrical outlet.

VESA mount bracket

Prerequisite

Before you start, read Appendix B “Important safety information” on page 65 and print the following instructions.

Replacement procedure

1. Turn off the computer and remove all connected devices.
2. Disconnect the computer from ac power and all connected cables.
3. Remove the VESA mount bracket.

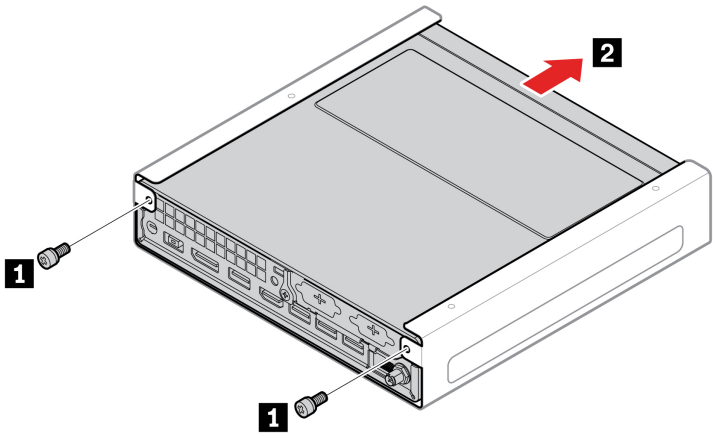

4. Install the VESA mount bracket.

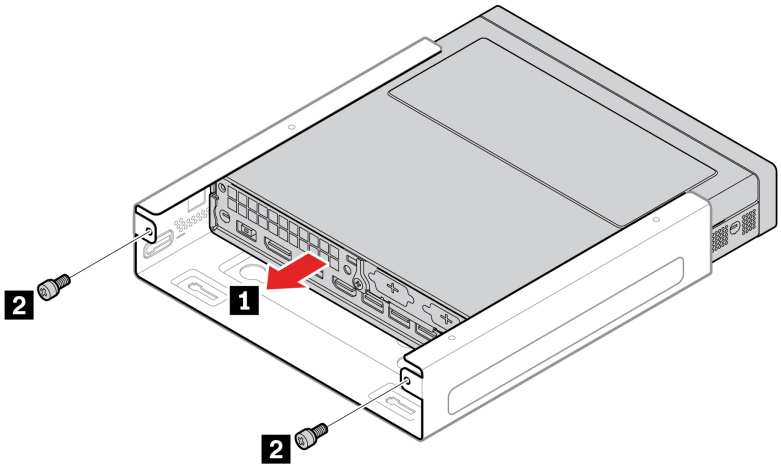

5. Reconnect the external cables to the corresponding connectors on the computer, and then reconnect the power cord to the electrical outlet.

External optical drive box and external optical drive

Prerequisite

Before you start, read Appendix B “Important safety information” on page 65 and print the following instructions.

Replacement procedure

1. Turn off the computer and remove all connected devices.
2. Disconnect the computer from ac power and all connected cables.
3. Remove the external optical drive box.

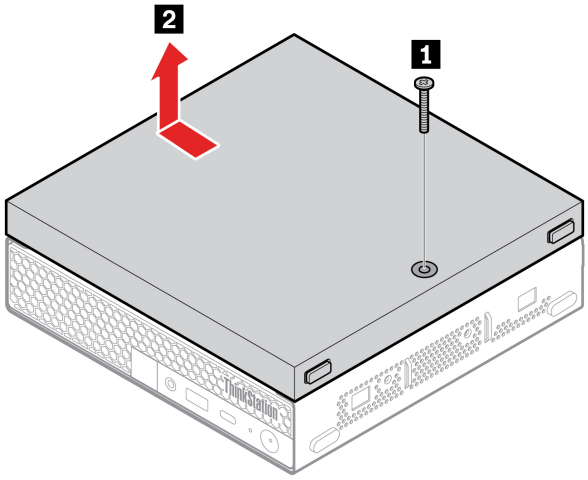

4. Remove the external optical drive.

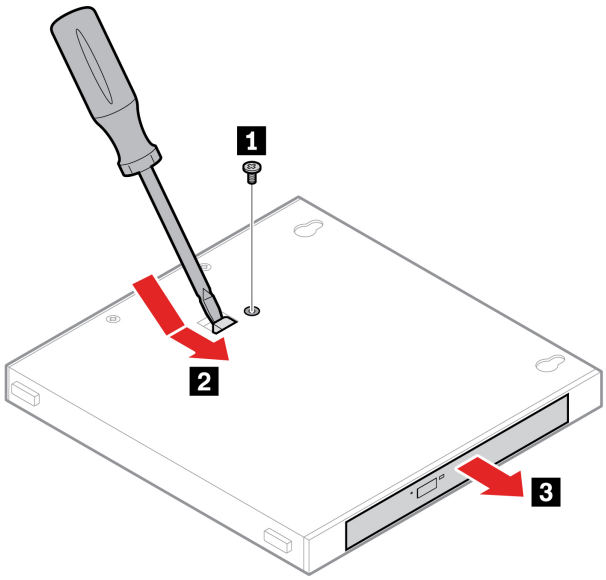

5. Install the external optical drive.

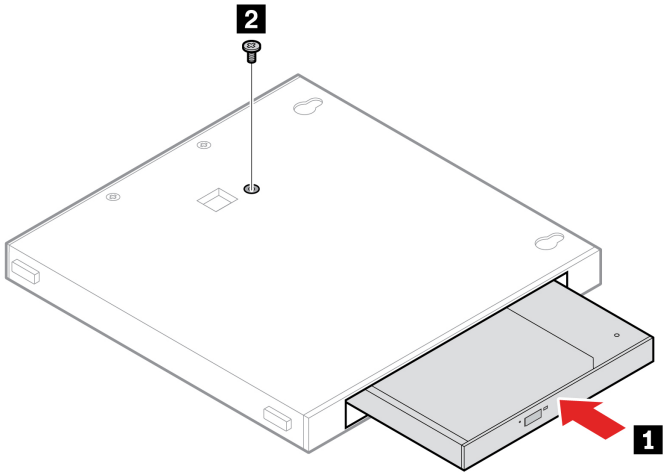

6. Install the external optical drive box.

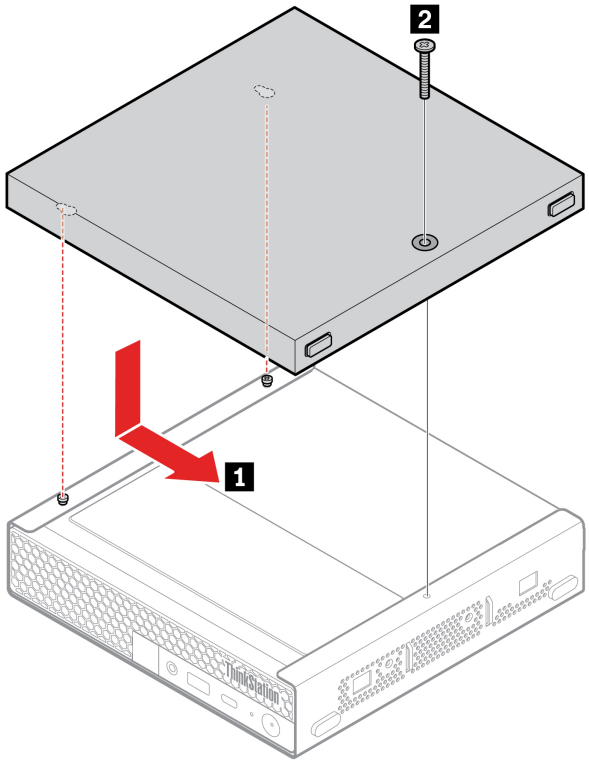

7. Reconnect the external cables to the corresponding connectors on the computer, and then reconnect the power cord to the electrical outlet.

Power adapter bracket

Prerequisite

Before you start, read Appendix B “Important safety information” on page 65 and print the following instructions.

Replacement procedure

1. Turn off the computer and remove all connected devices.
2. Disconnect the computer from ac power and all connected cables.
3. Remove the power adapter bracket.

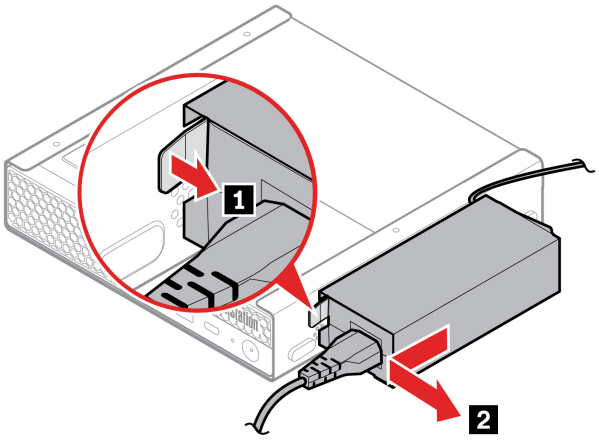

4. Remove the power cord.

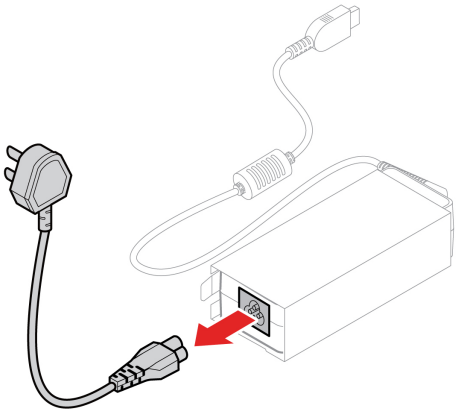

5. Remove the ac power adapter.

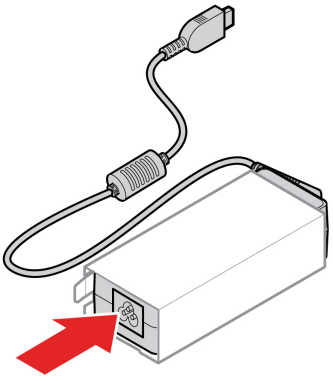

6. Install the ac power adapter.

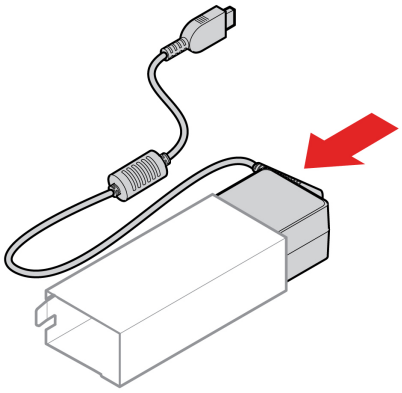

7. Install the power cord.

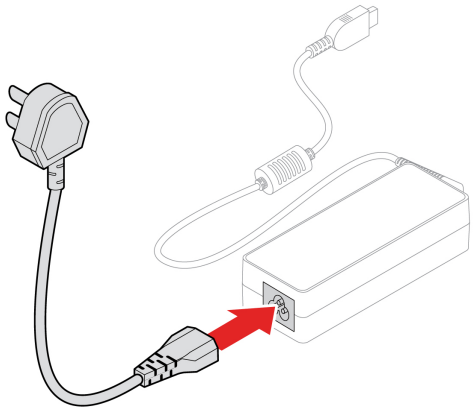

8. Install the power adapter bracket.

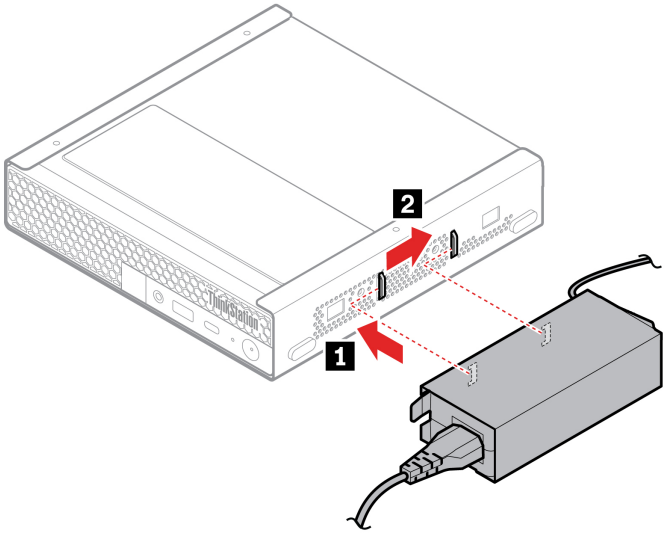

9. Reconnect the external cables to the corresponding connectors on the computer, and then reconnect the power cord to the electrical outlet.

Dust shield

Prerequisite

Before you start, read Appendix B “Important safety information” on page 65 and print the following instructions.

Replacement procedure

1. Turn off the computer and remove all connected devices.
2. Disconnect the computer from ac power and all connected cables.
3. Remove the dust shield.

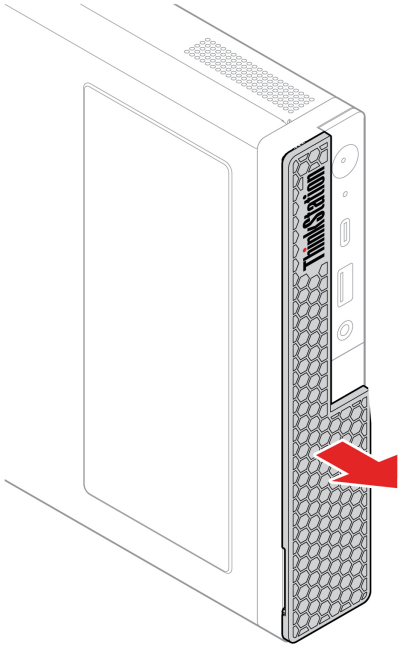

4. Install the dust shield.

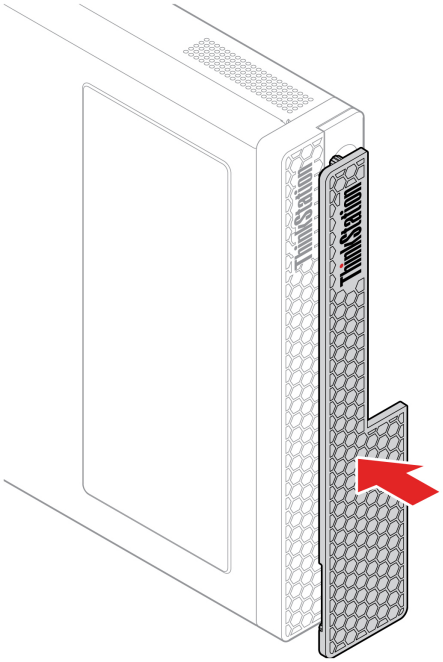

5. Reconnect the external cables to the corresponding connectors on the computer, and then reconnect the power cord to the electrical outlet.

Computer cover

Prerequisite

Before you start, read Appendix B “Important safety information” on page 65 and print the following instructions.



Before you open the computer cover, turn off the computer, and wait several minutes until the computer is cool.

Replacement procedure

1. Turn off the computer and remove all connected devices.
2. Disconnect the computer from ac power and all connected cables.
3. Unlock any locking device that secures the computer cover.
4. Remove the rear Wi-Fi antenna, if any. See “Rear Wi-Fi antenna” on page 36.
5. Remove the vertical stand, if any. See “Vertical stand” on page 37.
6. Remove the VESA mount bracket, if any. See “VESA mount bracket” on page 39.
7. Remove the external optical drive box and external optical drive, if any. See “External optical drive box and external optical drive” on page 40.
8. Remove the power adapter bracket, if any. See “Power adapter bracket” on page 41.
9. Remove the dust shield, if any. See “Dust shield” on page 44.

10. Remove the computer cover.

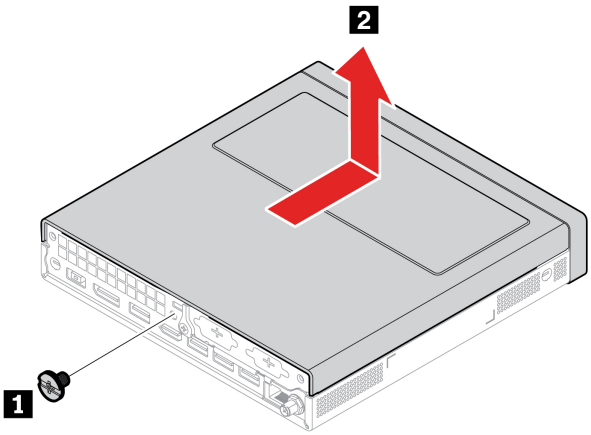

11. Install the computer cover.

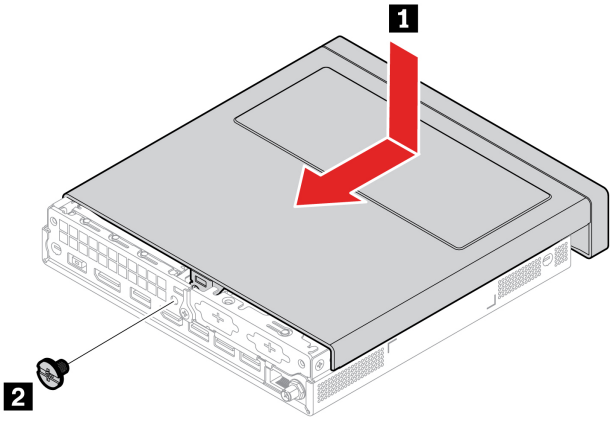

12. Reinstall all removed parts. Reconnect the external cables to the corresponding connectors on the computer, and then reconnect the power cord to the electrical outlet.

Internal speaker

Prerequisite

Before you start, read Appendix B “Important safety information” on page 65 and print the following instructions.

Replacement procedure

1. Remove the computer cover. See “Computer cover” on page 45.
2. Disconnect the internal speaker cable from the internal speaker connector on the system board.

3. Remove the internal speaker.

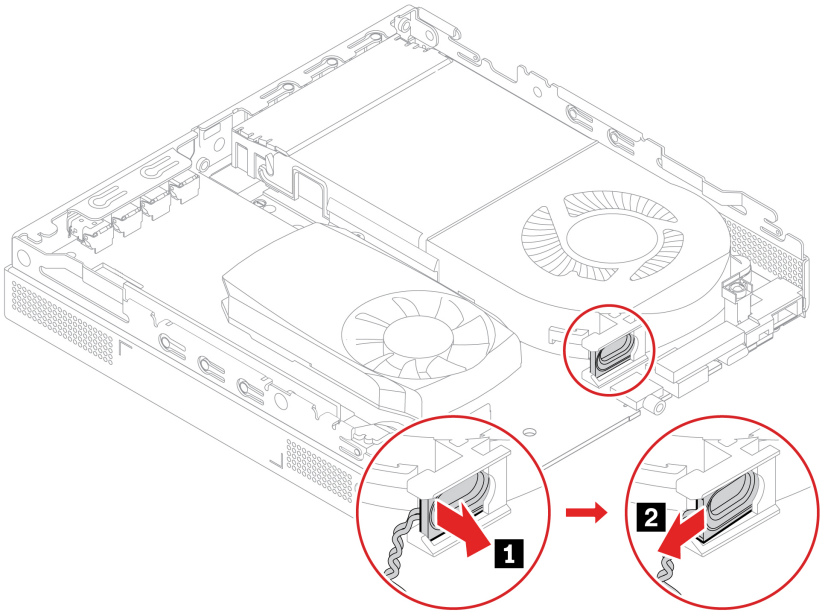

4. Install the internal speaker.

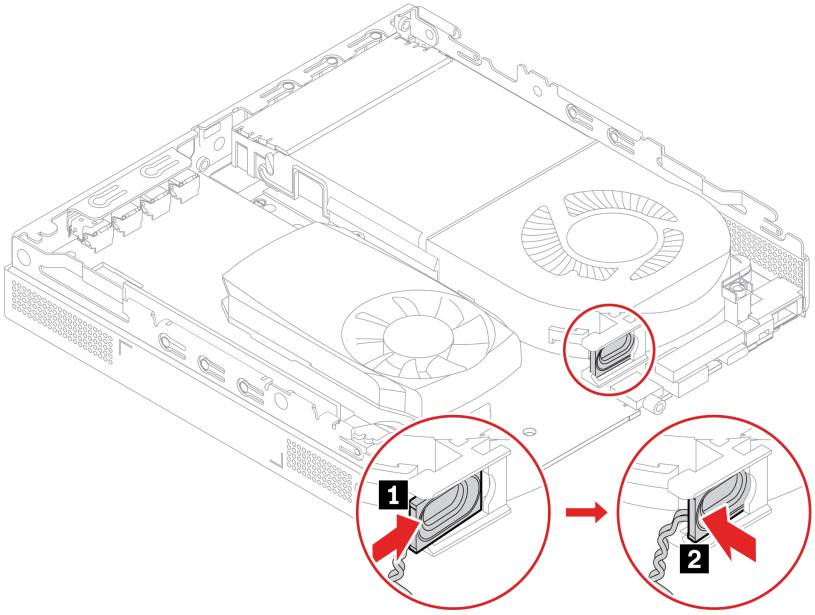

5. Connect the internal speaker cable to the internal speaker connector on the system board.
6. Reinstall all removed parts.

System fan

Prerequisite

Before you start, read Appendix B “Important safety information” on page 65 and print the following instructions.

Replacement procedure

1. Remove the computer cover. See “Computer cover” on page 45.
2. Remove the internal speaker, if any. See “Internal speaker” on page 46.
3. Disconnect the system fan cable from the system fan connector on the system board.
4. Remove the system fan.

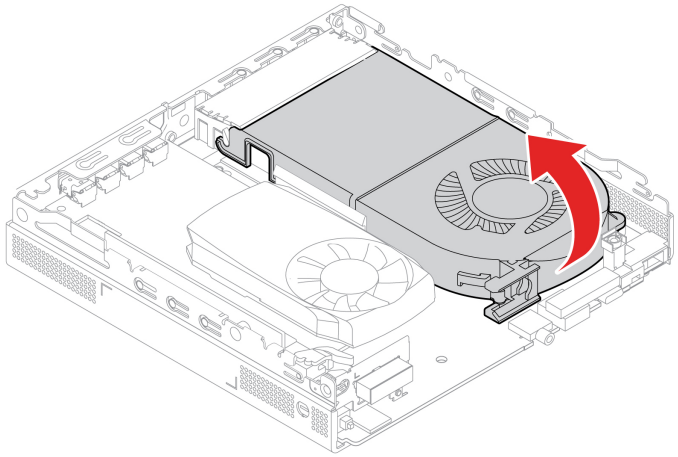

5. Install the system fan.

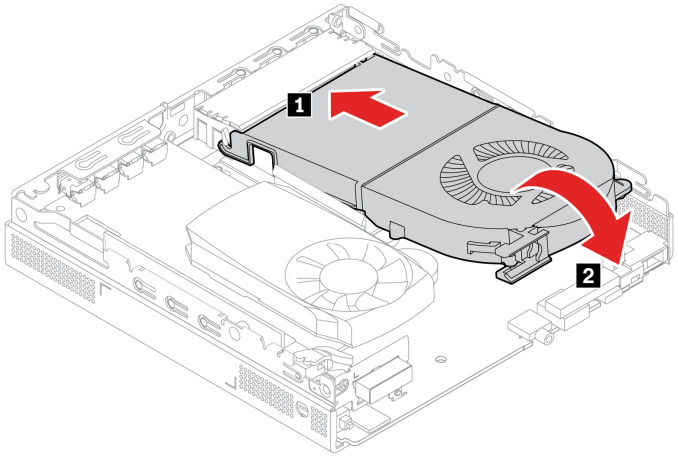

6. Connect the system fan cable to the system fan connector on the system board.
7. Reinstall all removed parts.

Coin-cell battery

Prerequisite

Before you start, read Appendix B “Important safety information” on page 65 and print the following instructions.

Your computer has a special type of memory that maintains the date, time, and settings for built-in features, such as parallel connector assignments (configurations). A coin-cell battery keeps this information active when you turn off the computer.

The coin-cell battery normally requires no charging or maintenance throughout its life; however, no coin-cell battery lasts forever. If the coin-cell battery fails, the date and time information is lost. An error message is displayed when you turn on the computer.

Replacement procedure

1. Remove the computer cover. See “Computer cover” on page 45.
2. Remove the system fan. See “System fan” on page 47.
3. Disengage the latch.

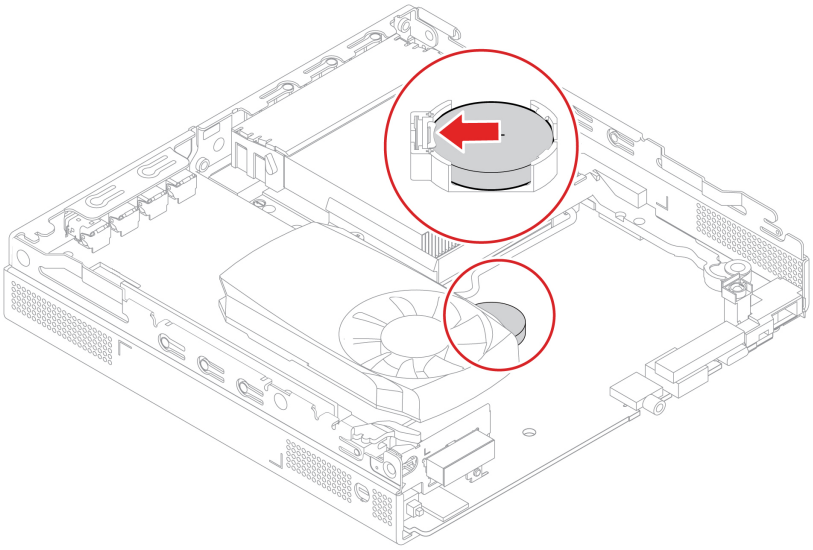

4. Remove the coin-cell battery.

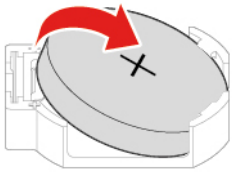

5. Install the coin-cell battery.

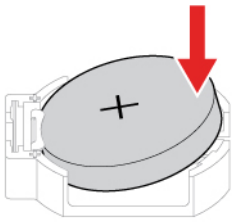

6. Secure the coin-cell battery with the latch.

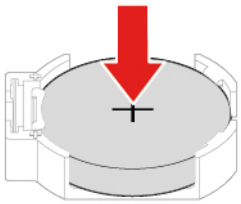

7. Reinstall all removed parts.
8. Reset the system date and time in the UEFI BIOS menu.

To dispose of the coin-cell battery, refer to the “Lithium coin-cell battery notice” in the *Safety and Warranty Guide*.

PCIe card and PCIe converter

Prerequisite

Before you start, read Appendix B “Important safety information” on page 65 and print the following instructions.

Replacement procedure

1. Remove the computer cover. See “Computer cover” on page 45.
2. Remove the PCIe card from the computer.

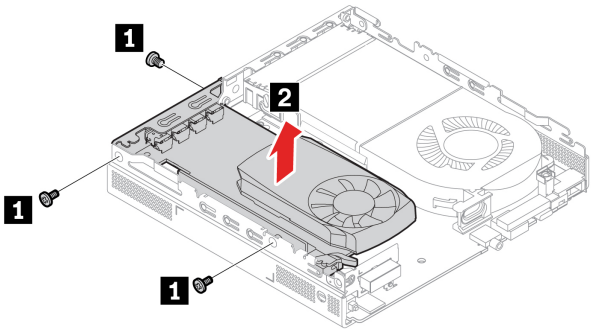

3. Remove the PCIe converter from the PCIe card.

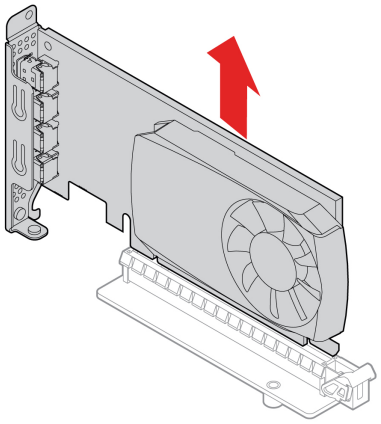

4. Replace the PCIe card bracket. Install the PCIe converter on the PCIe card.

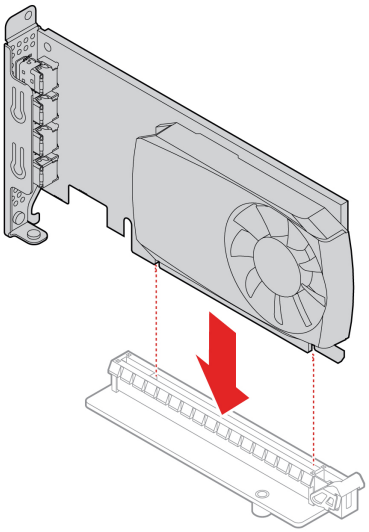

5. Install the PCIe card into the computer.

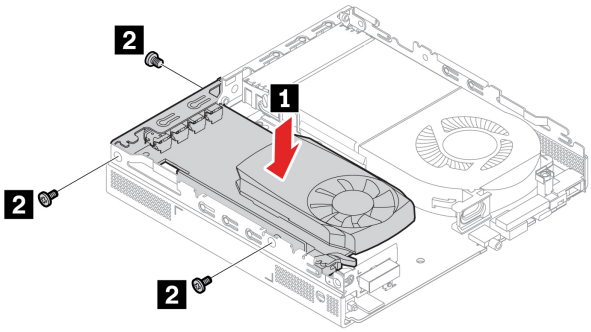

6. Reinstall all removed parts.

Wi-Fi card and Wi-Fi card shield

Prerequisite

Before you start, read Appendix B “Important safety information” on page 65 and print the following instructions.

Replacement procedure

1. Remove the computer cover. See “Computer cover” on page 45.
2. Remove the PCIe card and PCIe converter, if any. See “PCIe card and PCIe converter” on page 50.

3. Remove the Wi-Fi card.

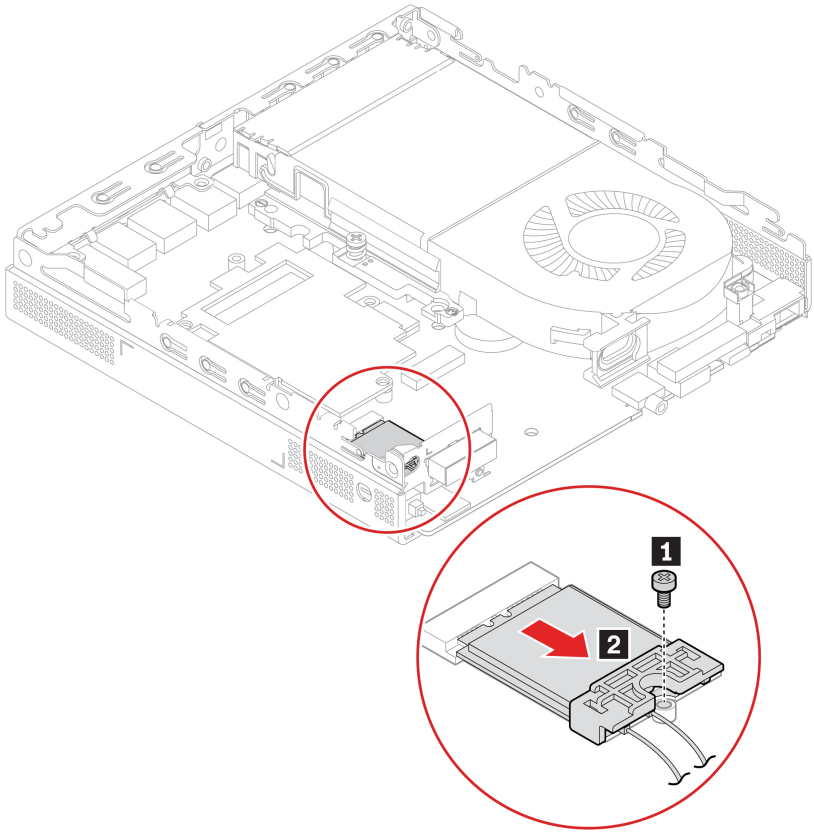

4. Remove the Wi-Fi card shield.

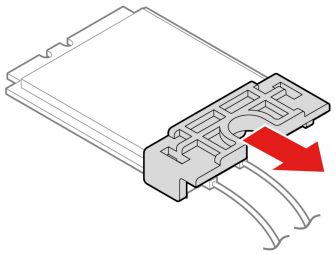

5. Disconnect the Wi-Fi antennas from the Wi-Fi card.

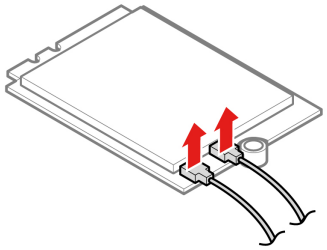

6. Connect the Wi-Fi antennas to the Wi-Fi card.

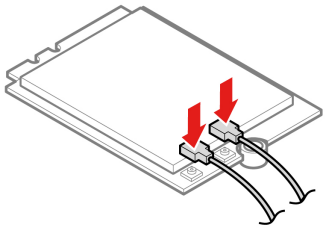

7. Install the Wi-Fi card shield.

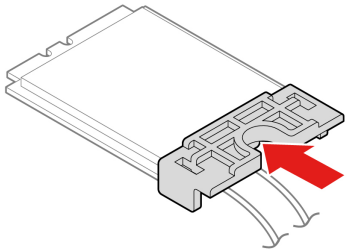

8. Install the Wi-Fi card.

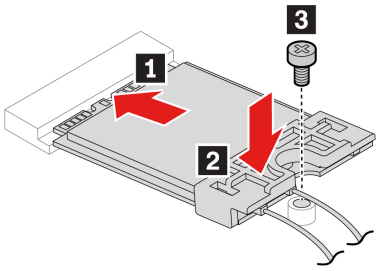

9. Reinstall all removed parts.

Bottom cover

Prerequisite

Before you start, read Appendix B “Important safety information” on page 65 and print the following instructions.

Replacement procedure

1. Remove the computer cover. See “Computer cover” on page 45.
2. Turn over the computer so that the bottom cover is facing up.

3. Remove the bottom cover.

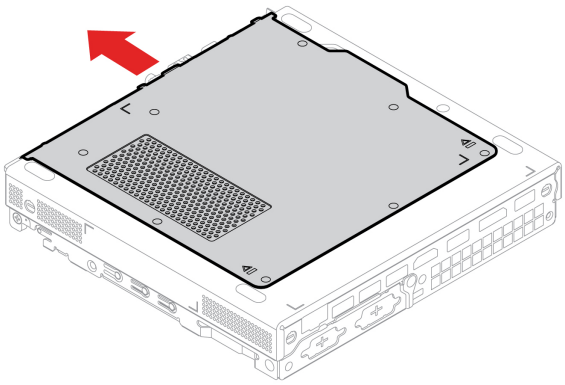

4. Install the bottom cover.

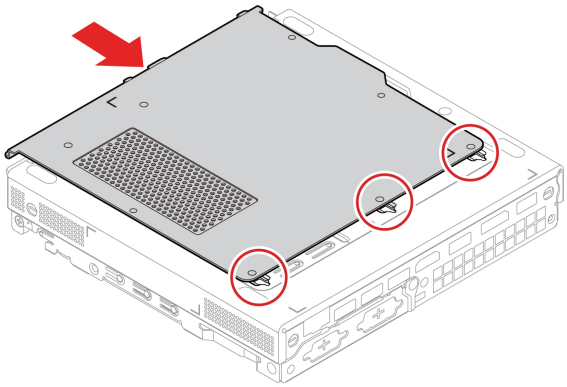

5. Turn over the computer so that the bottom cover is facing down.
6. Reinstall all removed parts.

M.2 solid-state drive

Prerequisite

Before you start, read Appendix B “Important safety information” on page 65 and print the following instructions.

Attention: The M.2 solid-state drive is sensitive. Inappropriate handling might cause damage and permanent loss of data. When handling the M.2 solid-state drive, observe the following guidelines:

- Replace the M.2 solid-state drive only for upgrade or repair. The M.2 solid-state drive is not designed for frequent changes or replacement.
- Before replacing the M.2 solid-state drive, make a backup copy of all the data that you want to keep.
- Do not touch the contact edge of the M.2 solid-state drive. Otherwise, the M.2 solid-state drive might get damaged.
- Do not apply pressure to the M.2 solid-state drive.
- Do not make the M.2 solid-state drive subject to physical shocks or vibration. Put the M.2 solid-state drive on a soft material, such as cloth, to absorb physical shocks.

Replacement procedure

1. Remove the computer cover. See “Computer cover” on page 45.
2. Remove the bottom cover. See “Bottom cover” on page 53.
3. Open the retention latch.

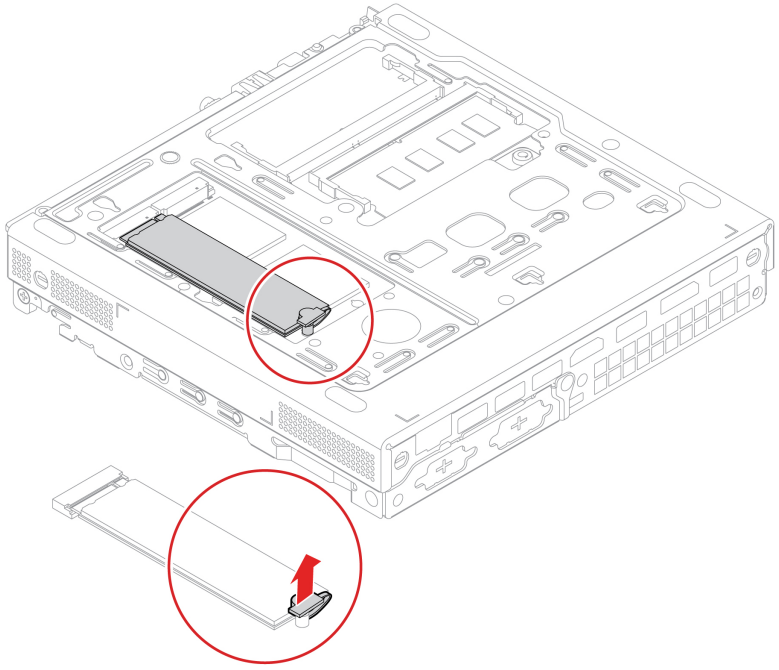

4. Remove the M.2 solid-state drive.

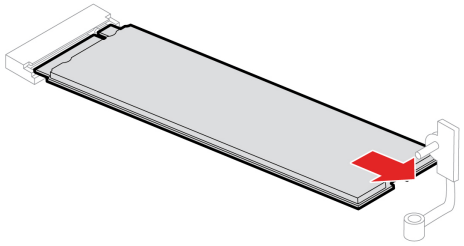

5. Install the M.2 solid-state drive.

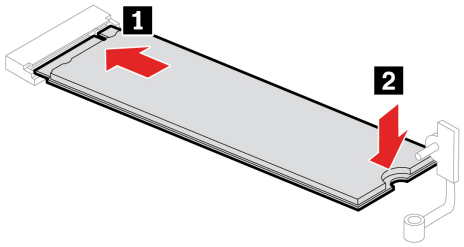

6. Close the retention latch.

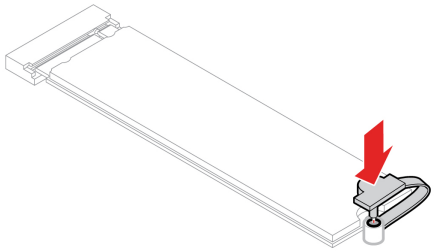

7. Reinstall all removed parts.

Memory module

Prerequisite

Before you start, read Appendix B “Important safety information” on page 65 and print the following instructions.

Replacement procedure

1. Remove the computer cover. See “Computer cover” on page 45.
2. Remove the bottom cover. See “Bottom cover” on page 53.
3. Disengage the latches.

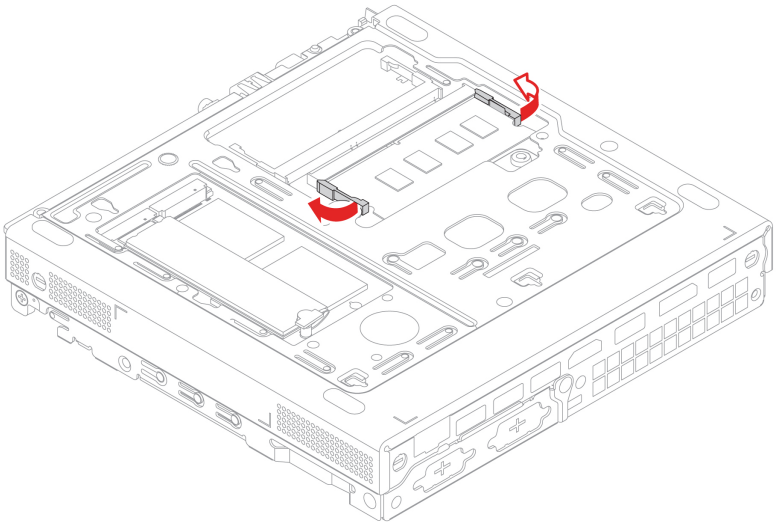

4. Remove the memory module.

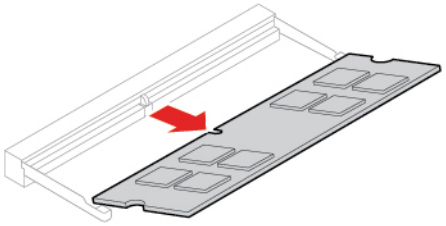

5. Install the memory module.

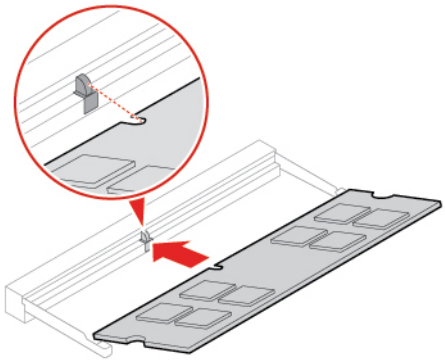

6. Secure the memory module with the latches.

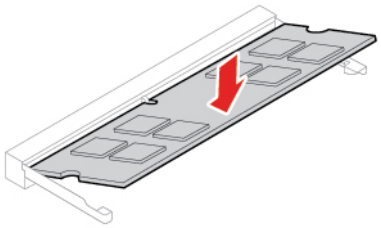

7. Reinstall all removed parts.

Chapter 9. Help and support

Self-help resources

Use the following self-help resources to learn more about the computer and troubleshoot problems.

Resources	How to access?
Product documentation: • *Safety and Warranty Guide* • *Setup Guide* • This *User Guide* • *Regulatory Notice*	Go to https://pcsupport.lenovo.com. Then, follow the on-screen instructions to filter out the documentation you want.
Lenovo Support Web site with the latest support information of the following: • Drivers and software • Diagnostic solutions • Product and service warranty • Product and parts details • Knowledge base and frequently asked questions	https://pcsupport.lenovo.com
Ubuntu help information	https://help.ubuntu.com/lts/ubuntu-help/index.html

© Copyright Lenovo 2020, 2021

Call Lenovo

If you have tried to correct the problem yourself and still need help, you can call Lenovo Customer Support Center.

Before you contact Lenovo

Prepare the following before you contact Lenovo:

1. Record the problem symptoms and details:
   - What is the problem? Is it continuous or intermittent?
   - Any error message or error code?
   - What operating system are you using? Which version?
   - Which software applications were running at the time of the problem?
   - Can the problem be reproduced? If so, how?
2. Record the system information:
   - Product name
   - Machine type and serial number

     The following illustration shows where to find the machine type and serial number of your computer.

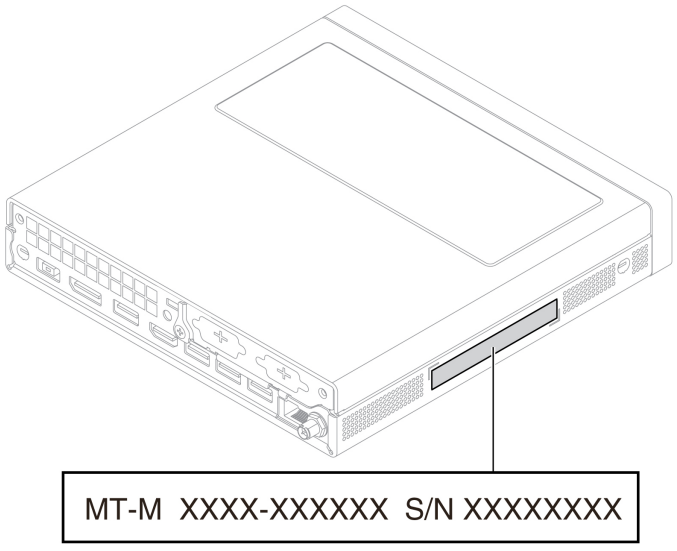

Lenovo Customer Support Center

During the warranty period, you can call Lenovo Customer Support Center for help.

Telephone numbers

For a list of the Lenovo Support phone numbers for your country or region, go to: https://pcsupport.lenovo.com/supportphonelist

Note: Phone numbers are subject to change without notice. If the number for your country or region is not provided, contact your Lenovo reseller or Lenovo marketing representative.

Services available during the warranty period

- Problem determination - Trained personnel are available to assist you with determining if you have a hardware problem and deciding what action is necessary to fix the problem.
- Lenovo hardware repair - If the problem is determined to be caused by Lenovo hardware under warranty, trained service personnel are available to provide the applicable level of service.
- Engineering change management - Occasionally, there might be changes that are required after a product has been sold. Lenovo or your reseller, if authorized by Lenovo, will make selected Engineering Changes (ECs) that apply to your hardware available.

Services not covered

- Replacement or use of parts not manufactured for or by Lenovo or nonwarranted parts
- Identification of software problem sources
- Configuration of UEFI BIOS as part of an installation or upgrade
- Changes, modifications, or upgrades to device drivers
- Installation and maintenance of network operating systems (NOS)
- Installation and maintenance of programs

For the terms and conditions of the Lenovo Limited Warranty that apply to your Lenovo hardware product, see “Warranty information” in the *Safety and Warranty Guide* that comes with your computer.

Purchase additional services

During and after the warranty period, you can purchase additional services from Lenovo at: https://www.lenovo.com/services

Service availability and service name might vary by country or region.

Appendix A. System memory speed

The Intel Core™ microprocessor families compatible with this ThinkStation computer feature an integrated memory controller. The memory controller provides the microprocessor with direct access to the system memory. Therefore, the system memory speed will be determined by the memory module type, frequency, size (capacity), the number of memory modules installed, and the microprocessor model.

Notes:

- The actual system memory speed of the memory modules varies depending on the microprocessor model. For example, your computer comes with 3200 MT/s memory modules, but the microprocessor only supports up to 2933 MT/s memory modules. Then the system memory speed will be no faster than 2933 MT/s.
- The microprocessor models supported in your computer might vary. For a list of supported microprocessor models, contact the Lenovo Customer Support Center.

Refer to the following information about the system memory speed:

- **Memory module types**: DDR4 non-ECC SODIMMs
- **Memory module operating voltage**: 1.2 V
- **Memory module frequency**: 3200 MT/s

© Copyright Lenovo 2020, 2021

Appendix B. Important safety information

Safety notices

This information can help you safely use your computer. Follow and retain all information included with your computer. The information in this document does not alter the terms of your purchase agreement or the Limited Warranty. For more information, see "Warranty Information" in the *Safety and Warranty Guide* that comes with your computer.

Customer safety is important. Our products are developed to be safe and effective. However, personal computers are electronic devices. Power cords, power adapters, and other features can create potential safety risks that can result in physical injury or property damage, especially if misused. To reduce these risks, follow the instructions included with your product, observe all warnings on the product and in the operating instructions, and review the information included in this document carefully. By carefully following the information contained in this document and provided with your product, you can help protect yourself from hazards and create a safer computer work environment. If the computer is used in a manner not specified by the manufacturer, the protection provided by the computer may be impaired.

Note: This information includes references to power adapters and batteries. In addition, some products (such as speakers and monitors) ship with external power adapters. If you have such a product, this information applies to your product. In addition, computer products contain a coin-sized internal battery that provides power to the system clock even when the computer is unplugged, so the battery safety information applies to all computer products.

Conditions that require immediate action

Products can become damaged due to misuse or neglect. Some product damage is serious enough that the product should not be used again until it has been inspected and, if necessary, repaired by an authorized servicer.

As with any electronic device, pay close attention to the product when it is turned on.

On very rare occasions, you might notice an odor or see a puff of smoke or sparks vent from your product. You might also hear sounds like popping, cracking, or hissing. These might merely mean that an internal electronic component has failed in a safe and controlled manner. Or, they might indicate a potential safety issue. Do not take risks or attempt to diagnose the situation yourself. Contact the Customer Support Center for further guidance. For a list of Service and Support phone numbers, see the following Web site:

https://pcsupport.lenovo.com/supportphonelist

Frequently inspect your computer and its components for damage, wear, or signs of danger. If you have any question about the condition of a component, do not use the product. Contact the Customer Support Center or the product manufacturer for instructions on how to inspect the product and have it repaired, if necessary.

In the unlikely event that you notice any of the following conditions, or if you have any safety concerns with your product, stop using the product and unplug it from the power source and telecommunication lines until you can speak to the Customer Support Center for further guidance.

- Power cords, plugs, power adapters, extension cords, surge protectors, or power supplies that are cracked, broken, or damaged.

© Copyright Lenovo 2020, 2021

- Signs of overheating, smoke, sparks, or fire.
- Damage to a battery (such as cracks, dents, or creases), discharge from a battery, or a buildup of foreign substances on the battery.
- A cracking, hissing, or popping sound, or strong odor that comes from the product.
- Signs that liquid has been spilled or an object has fallen onto the computer product, the power cord, or power adapter.
- The computer product, power cord, or power adapter has been exposed to water.
- The product has been dropped or damaged in any way.
- The product does not operate normally when you follow the operating instructions.

Note: If you notice these conditions with a product (such as an extension cord) that is not manufactured for or by Lenovo, stop using that product until you can contact the product manufacturer for further instructions, or until you get a suitable replacement.

Service and upgrades

Do not attempt to service a product yourself unless instructed to do so by the Customer Support Center or your documentation. Only use a Service Provider who is approved to repair your particular product.

Note: Some computer parts can be upgraded or replaced by the customer. Upgrades typically are referred to as options. Replacement parts approved for customer installation are referred to as Customer Replaceable Units, or CRUs. Lenovo provides documentation with instructions when it is appropriate for customers to install options or replace CRUs. You must closely follow all instructions when installing or replacing parts. The Off state of a power indicator does not necessarily mean that voltage levels inside a product are zero. Before you remove the covers from a product equipped with a power cord, always ensure that the power is turned off and that the product is unplugged from any power source. If you have any questions or concerns, contact the Customer Support Center.

Although there are no moving parts in the computer after the power cord has been disconnected, the following warnings are required for your safety.



Moving Parts:

Keep fingers and other parts of your body away from hazardous, moving parts. If you suffer an injury, seek medical care immediately.



Hot Surface:

Avoid contact with hot components inside the computer. During operation, some components become hot enough to burn the skin. Before you open the computer cover, turn off the computer, disconnect power, and wait approximately 10 minutes for the components to cool.



After replacing a CRU, reinstall all protective covers, including the computer cover, before connecting power and operating the computer. This action is important to help prevent unexpected electrical shock and help ensure the containment of an unexpected fire that could happen under extremely rare conditions.



Sharp Edges:

When replacing CRUs, be cautious of sharp edges or corners that might cause injury. If you suffer an injury, seek medical care immediately.

Power cords and power adapters



DANGER

Use only the power cords and power adapters supplied by the product manufacturer.

The power cords shall be safety approved. For Germany, it shall be H03VV-F, 3G, 0.75 mm^2, or better. For other countries, the suitable types shall be used accordingly.

Never wrap a power cord around a power adapter or other object. Doing so can stress the cord in ways that can cause the cord to fray, crack, or crimp. This can present a safety hazard.

Always route power cords so that they will not be walked on, tripped over, or pinched by objects.

Protect power cords and power adapters from liquids. For instance, do not leave your power cord or power adapter near sinks, tubs, toilets, or on floors that are cleaned with liquid cleansers. Liquids can cause a short circuit, particularly if the power cord or power adapter has been stressed by misuse. Liquids also can cause gradual corrosion of power cord terminals and/or the connector terminals on a power adapter, which can eventually result in overheating.

Ensure that all power cord connectors are securely and completely plugged into receptacles.

Do not use any power adapter that shows corrosion at the ac input pins or shows signs of overheating (such as deformed plastic) at the ac input pins or anywhere on the power adapter.

Do not use any power cords where the electrical contacts on either end show signs of corrosion or overheating or where the power cord appears to have been damaged in any way.

To prevent possible overheating, do not cover the power adapter with clothing or other objects when the power adapter is plugged into an electrical outlet.

Power cord notice

Note: The power cord and adapter provided with this product are intended to be used with this product only. Do not use them with any other products.

For your safety, Lenovo provides a power cord with a grounded attachment plug to use with this product. To avoid electrical shock, always use the power cord and plug with a properly grounded outlet.

Power cords provided by Lenovo in the United States and Canada are listed by Underwriter's Laboratories (UL) and certified by the Canadian Standards Association (CSA).

For units intended to be operated at 115 volts: Use a UL-listed and CSA-certified cord set consisting of a minimum 18 AWG, Type SVT or SJT, three-conductor cord, a maximum of 15 feet in length and a parallel blade, grounding-type attachment plug rated 10 amperes, 125 volts.

For units intended to be operated at 230 volts (U.S. use): Use a UL-listed and CSA-certified cord set consisting of a minimum 18 AWG, Type SVT or SJT, three-conductor cord, a maximum of 15 feet in length and a tandem blade, grounding-type attachment plug rated 10 amperes, 250 volts.

For units intended to be operated at 230 volts (outside the U.S.): Use a cord set with a grounding-type attachment plug. The cord set should have the appropriate safety approvals for the country in which the equipment will be installed.

Power cords provided by Lenovo for a specific country or region are usually available only in that country or region.

For units intended to be operated in Germany: The power cords must be safety approved. For Germany, it must be H05VV-F, 3G, 0.75 mm2, or better. For other countries, the suitable types must be used accordingly.

For units intended to be operated in Denmark: Use a cord set with a grounding-type attachment plug. The cord set should have the appropriate safety approvals for the country in which the equipment will be installed.

For units intended to be operated in Norway, Sweden, Finland: Use a cord set with a two-prong attachment plug. The cord set should have the appropriate safety approvals for the country in which the equipment will be installed.

If you intend to use your PC in a country or region that is different from your ordering location, please purchase an additional Lenovo power cord for the country or region where the PC will be used. Refer to the power cord guide provided in our Web site, https://pcsupport.lenovo.com, for details. Some countries and regions support multiple voltages, so make sure you order the appropriate power cord for the intended voltage.

Extension cords and related devices

Ensure that extension cords, surge protectors, uninterruptible power supplies, and power strips that you use are rated to handle the electrical requirements of the product. Never overload these devices. If power strips are used, the load should not exceed the power strip input rating. Consult an electrician for more information if you have questions about power loads, power requirements, and input ratings.

Plugs and outlets

DANGER

If a receptacle (power outlet) that you intend to use with your computer equipment appears to be damaged or corroded, do not use the outlet until it is replaced by a qualified electrician.

Do not bend or modify the plug. If the plug is damaged, contact the manufacturer to obtain a replacement.

Do not share an electrical outlet with other home or commercial appliances that draw large amounts of electricity; otherwise, unstable voltage might damage your computer, data, or attached devices.

Some products are equipped with a three-pronged plug. This plug fits only into a grounded electrical outlet. This is a safety feature. Do not defeat this safety feature by trying to insert it into a non-grounded outlet. If you cannot insert the plug into the outlet, contact an electrician for an approved outlet adapter or to replace the outlet with one that enables this safety feature. Never overload an electrical outlet. The overall system load should not exceed 80 percent of the branch circuit rating. Consult an electrician for more information if you have questions about power loads and branch circuit ratings.

Be sure that the power outlet you are using is properly wired, easily accessible, and located close to the equipment. Do not fully extend power cords in a way that will stress the cords.

Be sure that the power outlet provides the correct voltage and current for the product you are installing.

Carefully connect and disconnect the equipment from the electrical outlet.

Power supply statement

Never remove the cover on a power supply or any part that has the following label attached.



Hazardous voltage, current, and energy levels are present inside any component that has this label attached. There are no serviceable parts inside these components. If you suspect a problem with one of these parts, contact a service technician.

External devices

CAUTION:
Do not connect or disconnect any external device cables other than Universal Serial Bus (USB) and 1394 cables while the computer power is on; otherwise, you might damage your computer. To avoid possible damage to attached devices, wait at least five seconds after the computer is shut down to disconnect external devices.

Lithium coin-cell battery notice

DANGER

Danger of explosion if battery is incorrectly replaced.

If the coin-cell battery is not a CRU, do not attempt to replace the coin-cell battery. Replacement of the battery must be done by a Lenovo-authorized repair facility or technician.

The Lenovo-authorized repair facilities or technicians recycle Lenovo batteries according to local laws and regulations.

When replacing the lithium coin-cell battery, use only the same type or equivalent type that is recommended by the manufacturer. The battery contains lithium and can explode if not properly used, handled, or disposed of. Swallowing the lithium coin-cell battery will cause chocking or severe internal burns in just two hours and might even result in death.

Keep batteries away from children. If the lithium coin-cell battery is swallowed or placed inside any part of the body, seek medical care immediately.

Do not:

- Throw or immerse into water
- Heat to more than 100 °C (212°F)
- Repair or disassemble
- Leave in an extremely low air pressure environment
- Leave in an extremely high-temperature environment
- Crush, puncture, cut, or incinerate

Dispose of the battery as required by local ordinances or regulations.

The following statement applies to users in the state of California, U.S.A.

California Perchlorate Information:

Products containing manganese dioxide lithium coin-cell batteries may contain perchlorate.

Perchlorate Material - special handling may apply, see https://www.dtsc.ca.gov/hazardouswaste/perchlorate/.

Heat and product ventilation

Computers, power adapters, and many accessories can generate heat when turned on and when batteries are charging. Always follow these basic precautions:

- Do not leave your computer, power adapter, or accessories in contact with your lap or any part of your body for an extended period when the products are functioning or when the battery is charging. Your

computer, power adapter, and many accessories produce some heat during normal operation. Extended contact with the body could cause discomfort or, potentially, a skin burn.

- Do not charge the battery or operate your computer, power adapter, or accessories near flammable materials or in explosive environments.
- Ventilation slots, fans, and heat sinks are provided with the product for safety, comfort, and reliable operation. These features might inadvertently become blocked by placing the product on a bed, sofa, carpet, or other flexible surface. Never block, cover, or disable these features.

Inspect your desktop computer for dust accumulation at least once every three months. Before inspecting your computer, turn off the power and unplug the computer's power cord from the electrical outlet; then remove any dust from vents and perforations in the bezel. If you notice external dust accumulation, then examine and remove dust from the inside of the computer including heat sink inlet fins, power supply vents, and fans. Always turn off and unplug the computer before opening the cover. If possible, avoid operating your computer within two feet of high-traffic areas. If you must operate your computer in or near a high-traffic area, inspect and, if necessary, clean your computer more frequently.

For your safety and to maintain optimum computer performance, always follow these basic precautions with your desktop computer:

- Keep the cover closed whenever the computer is plugged in.
- Regularly inspect the outside of the computer for dust accumulation.
- Remove dust from vents and any perforations in the bezel. More frequent cleanings might be required for computers in dusty or high-traffic areas.
- Do not restrict or block any ventilation openings.
- Do not store or operate your computer inside furniture, as this might increase the risk of overheating.
- Airflow temperatures into the computer should not exceed 35°C (95°F).
- Do not install air filtration devices. They may interfere with proper cooling.

Electrical current safety information



DANGER

Electric current from power, telephone, and communication cables is hazardous.

To avoid a shock hazard:

- **Do not use your computer during a lightning storm.**
- **Do not connect or disconnect any cables or perform installation, maintenance, or reconfiguration of this product during an electrical storm.**
- **Connect all power cords to a properly wired and grounded electrical outlet.**
- **Connect properly wired outlets to any equipment that will be attached to this product.**
- **Whenever possible, use one hand only to connect or disconnect signal cables.**
- **Never turn on any equipment when there is evidence of fire, water, or structural damage.**
- **Disconnect the attached power cords, battery, and all the cables before you open the device covers, unless instructed otherwise in the installation and configuration procedures.**
- **Do not use your computer until all internal parts enclosures are fastened into place. Never use the computer when internal parts and circuits are exposed.**

DANGER

Connect and disconnect cables as described in the following procedures when installing, moving, or opening covers on this product or attached devices.

To connect:

1. **Turn everything OFF.**
2. **First, attach all cables to devices.**
3. **Attach signal cables to connectors.**
4. **Attach power cords to outlets.**
5. **Turn devices ON.**

To disconnect:

1. **Turn everything OFF.**
2. **First, remove power cords from outlets.**
3. **Remove signal cables from connectors.**
4. **Remove all cables from devices.**

The power cord must be disconnected from the wall outlet or receptacle before installing all other electrical cables connected to the computer.

The power cord may be reconnected to the wall outlet or receptacle only after all other electrical cables have been connected to the computer.

DANGER

During electrical storms, do not perform any replacement and do not connect the telephone cable to or disconnect it from the telephone outlet on the wall.

Laser safety information

CAUTION:
When laser products (such as CD-ROMs, DVD drives, fiber optic devices, or transmitters) are installed, note the following:

- **Do not remove the covers. Removing the covers of the laser product could result in exposure to hazardous laser radiation. There are no serviceable parts inside the device.**
- **Use of controls or adjustments or performance of procedures other than those specified herein might result in hazardous radiation exposure.**

DANGER

Some laser products contain an embedded Class 3B laser diode. Note the following:
Laser radiation when open. Do not stare into the beam, do not view directly with optical instruments, and avoid direct exposure to the beam.

Liquid crystal display (LCD) notice

DANGER

To avoid shock hazards:

- **Do not remove the covers.**
- **Do not operate this product unless the stand is attached.**
- **Do not connect or disconnect this product during an electrical storm.**
- **The power cord plug must be connected to a properly wired and grounded power outlet.**
- **Any equipment to which this product will be attached must also be connected to properly wired and grounded power outlets.**
- **To isolate the monitor from the electrical supply, you must remove the plug from the power outlet. The power outlet should be easily accessible.**

Handling:

- If your monitor weighs more than 18 kg (39.68 lb), we recommend that it be moved or lifted by two people.

Product disposal (TFT monitors):

- The fluorescent lamp in the liquid crystal display contains mercury; dispose according to local, state, or federal laws.

Battery warnings:

- Risk of explosion if battery is replaced by an incorrect type.
- Dispose of used batteries according to the instructions.

Use earphones, headphones, or a headset

- If your computer has both a headphone connector and an audio line-out connector, always use the headphone connector for earphones, headphones, or a headset. However, the headphone connector does not support the microphone of the headset.
- If your computer has both a headset connector and an audio line-out connector, always use the headset connector for earphones, headphones, or a headset.



Excessive sound pressure from earphones and headphones can cause hearing loss. Adjustment of the equalizer to maximum increases the earphone and headphone output voltage and the sound pressure level. Therefore, to protect your hearing, adjust the equalizer to an appropriate level.

Excessive use of headphones or earphones for a long period of time at high volume can be dangerous if the output of the headphone or earphone connectors do not comply with specifications of EN 50332-2. The headphone output connector of your computer complies with EN 50332-2 Sub clause 7. This specification limits the computer's maximum wide band true RMS output voltage to 150 mV. To help protect against hearing loss, ensure that the headphones or earphones you use also comply with EN 50332-2 (Clause 7

Limits) or a wide band characteristic voltage of 75 mV. Using headphones that do not comply with EN 50332-2 can be dangerous due to excessive sound pressure levels.

If your Lenovo computer came with headphones or earphones in the packaging, as a set, the combination of the headphones or earphones and the computer already complies with the specifications of EN 50332-1. If different headphones or earphones are used, ensure that they comply with EN 50332-1 (Clause 6.5 Limitation Values). Using headphones that do not comply with EN 50332-1 can be dangerous due to excessive sound pressure levels.

Choking hazard notice



CHOKING HAZARD – Product contains small parts.

Keep away from children under three years.

Plastic bag notice

DANGER

Plastic bags can be dangerous. Keep plastic bags away from babies and children to avoid danger of suffocation.

Glass parts notice

CAUTION:
Some parts of your product may be made of glass. This glass could break if the product is dropped on a hard surface or receives a substantial impact. If glass breaks, do not touch or attempt to remove it. Stop using your product until the glass is replaced by trained service personnel.

Computer placement notices

Inappropriate computer placement might cause harm to children.

- Place the computer on a sturdy piece of low-rise furniture or furniture that has been anchored.
- Do not place the computer at the edge of the furniture.
- Keep the computer cables out of the reach of children.
- Some items, such as toys, might attract children. Keep such items away from the computer.

Supervise children in rooms where the above safety instructions cannot be fully implemented.

Hazardous energy statement

DANGER

Disconnect all power cords from electrical outlets before removing the computer cover or any part that has the above label attached.

DO NOT disassemble components that have the above label attached. There are no serviceable parts inside these components.

Your product is designed for safe use. However, hazardous voltage, current, and energy levels are present inside any component that has this label attached. Disassembling of these components might cause fire or might even result in death. If you suspect a problem with one of these parts, contact a service technician.

CAUTION:



Bright Light, possible skin or eye damage. Disconnect power before servicing.

CAUTION:



Infrared Light, possible skin or eye damage. Disconnect power before servicing.

Eye comfort

The property of the display in combination with following notes result in reduced eye fatigue and increased comfort.

For tips on how to minimize visual fatigue, please go to https://www.lenovo.com/us/en/safecomp/ to visit “Minimizing Visual Fatigue”.

Tip-over hazard prevention notice

The computer may cause harm to children if it is not located in an appropriate place. Follow the tips below to protect children from harm caused by the computer tipping over:

- Place the computers or monitors on sturdy furniture with a low base or furniture that has been anchored. Push the computers or monitors as far from the edge of the furniture as possible.
- Keep remote controls, toys, and other items that might attract children away from the computers or monitors
- Keep the computer or monitor cables out the reach of the children.
- Supervise children in rooms where these safety tips have not been followed.

CAUTION:
Some parts of your product may be made of glass. This glass could break if the product is dropped on a hard surface or receives a substantial impact. If glass breaks, do not touch it or attempt to remove it. Stop using your product until the glass is replaced by trained service personnel.

Static electricity prevention

Static electricity, although harmless to you, can seriously damage computer components and options. Improper handling of static-sensitive parts can damage the part. When you unpack an option or CRU, do not open the static-protective packaging containing the part until the instructions direct you to install it.

When you handle options or CRUs, or perform any work inside the computer, take the following precautions to avoid static-electricity damage:

- Limit your movement. Movement can cause static electricity to build up around you.
- Always handle components carefully. Handle adapters, memory modules, and other circuit boards by the edges. Never touch exposed circuitry.
- Prevent others from touching components.
- When you install a static-sensitive option or CRU, touch the static-protective packaging containing the part to a metal expansion-slot cover or other unpainted metal surface on the computer for at least two seconds. This reduces static electricity in the packaging and your body.
- When possible, remove the static-sensitive part from the static-protective packaging and install the part without setting it down. When this is not possible, place the static-protective packaging on a smooth, level surface and place the part on it.
- Do not place the part on the computer cover or other metal surface.

Operating environment

Maximum altitude (without pressurization)

- Operating: From -15.2 m (-50 ft) to 3048 m (10 000 ft)
- Storage: From -15.2 m (-50 ft) to 10 668 m (35 000 ft)

Temperature

- Operating: From 10°C (50°F) to 35°C (95°F)
- Storage in original shipping packaging: From -40°C (-40°F) to 60°C (140°F)
- Storage without packaging: From -10°C (14°F) to 60°C (140°F)

Note: If your computer is stored or transported in temperatures less than 10°C (50°F), allow the computer to rise slowly to an optimal operating temperature before use. This process might take up to two hours. Using the computer in a lower operating temperature might result in irreparable damage to your computer.

Relative humidity

- Operating: 10%-80% (non-condensing)
- Storage: 10%–90% (non-condensing)

Cleaning and maintenance

With appropriate care and maintenance, your computer will serve you reliably. The following topics offer information to help you keep your computer working with best performance.

Basic maintenance tips

Here are some basic points about keeping your computer functioning properly:

- Keep the computer in a clean, dry environment. Ensure that the computer rests on a flat, steady surface.

- Do not cover any of air vents. These air vents provide airflow to keep the computer from overheating.
- Keep electrical appliances such as an electric fan, radio, high-powered speakers, air conditioner, and microwave oven away from your computer because the strong magnetic fields generated by these appliances can damage the monitor and data on the storage drive.
- Keep food and drinks away from all parts of the computer. Food particles and spills might make the keyboard and mouse stick and unusable.
- Do not get the power switches or other controls wet. Moisture can damage these parts and cause an electrical hazard.
- Always disconnect a power cord by grasping the plug instead of the cord.
- Keep the computer software, device drivers, and operating system up-to-date.
- Empty your recycle bin on a regular basis.
- Clean out your Inbox, Sent Items, and Deleted Items folders in your e-mail application on a regular basis.
- Clean up files and free up storage drive space and memory space occasionally to prevent performance problems.
- Keep a log book. Entries might include major software or hardware changes, device-driver updates, intermittent problems and what you did to resolve them, and other issues you might have experienced. The cause of a problem might be change in hardware, change in software, or any other actions that might have taken place. A log book can help you or a Lenovo technician determine the cause of a problem.
- Back up your data on the storage drive regularly. You can restore the storage drive from a backup.
- Get the most up-to-date operating system update patches, software programs, and device drivers.

Maintenance tips about moving the computer

Before moving the computer, take the following precautions:

1. Back up your data on the storage drive.
2. Remove any media from the drives and turn off all connected devices and the computer. Then, disconnect all power cords from electrical outlets and disconnect all cables that are connected to the computer.
3. If you saved the original shipping cartons and packing materials, use them to pack the units. If you are using different cartons, cushion the units to avoid damage.

When you move the computer to another country or region, you must take local electrical standards into consideration. If the local electrical outlet style is different from the type you are currently using, contact the Lenovo Customer Support Center to purchase either an electrical plug adapter or a new power cord.

Clean your computer

CAUTION:
Remove any media from the drives and turn off all connected devices and the computer. Then, disconnect all power cords from electrical outlets and disconnect all cables that are connected to the computer.

It is a good practice to clean your computer periodically to protect the surfaces and ensure trouble-free operation.

Clean the computer surface: Wipe it with a lint-free cloth dampened in mild soap and water. Avoid applying liquids directly to the surface.

Clean the keyboard: Wipe the keys one by one with a lint-free cloth dampened in mild soap and water. If you wipe several keys at a time, the cloth might hook onto an adjacent key and possibly damage it. Avoid

spraying cleaner directly onto the keyboard. To remove any crumbs or dust from beneath the keys, you can use a camera blower with a brush or use cool air from a hair dryer.

Clean the computer screen: Scratches, oil, dust, chemicals, and ultraviolet light can affect the performance of your computer screen. Use a dry, soft lint-free cloth to wipe the screen gently. If you see a scratchlike mark on your screen, it might be a stain. Wipe or dust the stain gently with a soft, dry cloth. If the stain remains, moisten a soft, lint-free cloth with water or eyeglass cleaner, but do not apply liquids directly to your computer screen. Ensure that the computer screen is dry before closing it.

Appendix C. Accessibility and ergonomic information

This chapter provides information about accessibility and ergonomics.

Accessibility information

Lenovo is committed to providing users who have hearing, vision, and mobility limitations with greater access to information and technology. This section provides information about the ways these users can get the most out of their computer experience. You also can get the most up-to-date accessibility information from the following Web site:
https://www.lenovo.com/accessibility

Universal Access

Universal Access on the Ubuntu operating system enables you to configure your computers to suit your physical and cognitive needs.

To access the **Universal Access** menu:

1. Open the system menu from the top-right corner and click **Settings → Universal Access**.
2. Choose the appropriate tool by following the on-screen instructions.

Screen resolution

You can make the text and images on your screen easier to read by adjusting the screen resolution of your computer.

To adjust the screen resolution:

1. Go to **Settings → Devices → Displays**.
2. Follow the on-screen instructions.

Note: Setting a resolution too low might prevent some items from fitting on the screen.

Industry-standard connectors

Your computer provides industry-standard connectors that enable you to connect assistive devices.

Documentation in accessible formats

Lenovo provides electronic documentation in accessible formats, such as properly tagged PDF files or HyperText Markup Language (HTML) files. Lenovo electronic documentation is developed to ensure that visually impaired users can read the documentation through a screen reader. Each image in the documentation also includes adequate alternative text so that visually impaired users can understand the image when they use a screen reader.

Ergonomic information

Good ergonomic practice is important to get the most from your personal computer and to avoid discomfort. Arrange your workplace and the equipment you use to suit your individual needs and the kind of work that you perform. In addition, use healthy work habits to maximize your performance and comfort when using your computer.

© Copyright Lenovo 2020, 2021

Working in the virtual office might mean adapting to frequent changes in your environment. Adapting to the surrounding light sources, active seating, and the placement of your computer hardware, can help you improve your performance and achieve greater comfort.

This example shows someone in a conventional setting. Even when not in such a setting, you can follow many of these tips. Develop good habits, and they will serve you well.



General posture: Make minor modifications in your working posture to deter the onset of discomfort caused by long periods of working in the same position. Frequent short breaks from your work also help to prevent minor discomfort associated with your working posture.

Display: Position the display to maintain a comfortable viewing distance of 510 mm to 760 mm (20 inches to 30 inches). Avoid glare or reflections on the display from overhead lighting or outside sources of light. Keep the display screen clean and set the brightness to levels that enable you to see the screen clearly. Press the brightness control keys to adjust display brightness.

Head position: Keep your head and neck in a comfortable and neutral (vertical, or upright) position.

Chair: Use a chair that gives you good back support and seat height adjustment. Use chair adjustments to best suit your comfort posture.

Arm and hand position: If available, use chair arm rests or an area on your working surface to provide weight support for your arms. Keep your forearms, wrists, and hands in a relaxed and neutral (horizontal) position. Type with a soft touch without pounding the keys.

Leg position: Keep your thighs parallel to the floor and your feet flat on the floor or on a footrest.

Appendix D. Supplemental information about the Ubuntu operating system

In limited countries or regions, Lenovo offers customers an option to order computers with the preinstalled Ubuntu® operating system.

If the Ubuntu operating system is available on your computer, read the following information before you use the computer. Ignore any information related to Windows-based programs, utilities, and Lenovo preinstalled applications in this documentation.

Access the Lenovo Limited Warranty

This product is covered by the terms of the Lenovo Limited Warranty (LLW), version L505-0010-02 08/2011. You can view the LLW in a number of languages from the following Web site. Read the Lenovo Limited Warranty at:
https://www.lenovo.com/warranty/llw_02

The LLW also is preinstalled on the computer. To access the LLW, go to the following directory:

```
/opt/lenovo
```

If you cannot view the LLW either from the Web site or from your computer, contact your local Lenovo office or reseller to obtain a printed version of the LLW.

Access the Ubuntu help system

The Ubuntu help system provides information about how to use the Ubuntu operating system. To access the help system from Home Screen, move your pointer to the Launch bar, and then click the **Help** icon. If you cannot find the **Help** icon from the Launch bar, click the **Search** icon on the bottom left, and type Help to search it.

To learn more about the Ubuntu operating system, go to:
https://www.ubuntu.com

Get support information

If you need help, service, technical assistance, or more information about the Ubuntu operating system or other applications, contact the provider of the Ubuntu operating system or the provider of the application. If you need the service and support for hardware components shipped with your computer, contact Lenovo. For more information about how to contact Lenovo, refer to the *User Guide* and *Safety and Warranty Guide*.

To access the latest *User Guide* and *Safety and Warranty Guide*, go to:
https://pcsupport.lenovo.com

Open source information

This “Device” includes software made publicly available by Lenovo, including software licensed under the General Public License and/or the Lesser General Public License (the “open source software”).

You may obtain a copy of the corresponding source code for any such open source software licensed under the General Public License and/or the Lesser General Public License (or any other license requiring us to make a written offer to provide corresponding source code to you) from Lenovo for a period of three years without charge except for the cost of media, shipping, and handling, upon written request to Lenovo. This offer is valid to anyone in receipt of this Device.

© Copyright Lenovo 2020, 2021

You may send your request in writing to the address below accompanied by a check or money order for $15 to:

Lenovo Legal Department
Attn: Open Source Team / Source Code Requests
8001 Development Dr.
Morrisville, NC 27560

Please include the version of the OS and the version of the Linux Kernel pre-shipped on this Device as part of your request. Be sure to provide a return address.

The open source software is distributed in hope it will be useful, but WITHOUT ANY WARRANTY; without even the implied warranty of MERCHANTABILITY or FITNESS FOR A PARTICULAR PURPOSE. See for example the GNU General Public License and/or the Lesser General Public License for more information.

To view additional information regarding licenses, acknowledgments and required copyright notices for the open source software shipped on your Device, go to `/usr/share/doc/*/copyright`.

Appendix E. Compliance and TCO Certified information

This chapter provides regulatory, environmental, RoHS, and ENERGY STAR information about Lenovo products.

Radio frequency compliance statements

Computer models equipped with wireless communications comply with the radio frequency and safety standards of any country or region in which it has been approved for wireless use.

Besides this document, ensure that you read the *Regulatory Notice* for your country or region before using the wireless devices contained in your computer.

Locate wireless regulatory notices

For more information about the wireless regulatory notices, refer to the *Regulatory Notice* at:
https://pcsupport.lenovo.com

European Union (EU) / United Kingdom (UK) – Radio Equipment Compliance

EU Contact: Lenovo (Slovakia), Landererova 12, 811 09 Bratislava, Slovakia

UK contact: Lenovo, Redwood, Crockford Lane, Basingstoke, RG24 8WQ, UK.

This product is in conformity with all the requirements and essential norms that apply to EU Council Radio Equipment Directive 2014/53/EU on the approximation of the laws of the Member States, as well as the UK Radio Equipment Regulations SI 2017 No. 1206, relating to radio equipment.

The full text of the system EU declaration of conformity is available at:
https://www.lenovo.com/us/en/compliance/eu-doc

The full text of the system UK declaration of conformity is available at:
https://www.lenovo.com/us/en/compliance/uk-doc

Lenovo cannot accept responsibility for any failure to satisfy the protection requirements resulting from a non-recommended modification of the product, including the installation of option cards from other manufacturers. This product has been tested and found to comply with the limits for Class B equipment according to European and UK compliance standards. The limits for Class B equipment were derived for typical residential environments to provide reasonable protection against interference with certified communication devices.

Brazil

Este equipamento não tem direito à proteção contra interferência prejudicial e não pode causar interferência em sistemas devidamente autorizados.

© Copyright Lenovo 2020, 2021

This equipment is not protected against harmful interference and may not cause interference with duly authorized systems.

Mexico

Advertencia: En Mexico la operación de este equipo está sujeta a las siguientes dos condiciones: (1) es posible que este equipo o dispositivo no cause interferencia perjudicial y (2) este equipo o dispositivo debe aceptar cualquier interferencia, incluyendo la que pueda causar su operación no deseada.

Singapore



Korea

무선설비 전파 혼신 **(사용주파수 2400~2483.5 , 5725~5825 무선제품해당)**

해당 무선설비가 전파혼신 가능성이 있으므로 인명안전과 관련된 서비스는 할 수 없음

SAR 정보

본 장치는 전파 노출에 대한 가이드라인을 충족합니다.

본 장치는 무선 송수신기 입니다. 본 장치는 국제 가이드라인으로 권장되는 전파 노출에 대한 제한을 초과하지 않도록 설계되었습니다. 장치 액세서리 및 최신 부품을 사용할 경우 SAR 값이 달라질 수 있 습니다. SAR 값은 국가 보고 및 테스트 요구 사항과 네트워크 대역에 따라 다를 수 있습니다. 본 장치 는 사람의 신체에서 20mm 이상의 거리에서 사용할 수 있습니다.

Environmental information of countries and regions

This section provides environmental, recycling, and RoHS information about Lenovo products.

Recycling and environmental information

Lenovo encourages owners of information technology (IT) equipment to responsibly recycle their equipment when it is no longer needed. Lenovo offers a variety of programs and services to assist equipment owners in recycling their IT products. For information about recycling Lenovo products, go to:
https://www.lenovo.com/us/en/compliance/recycling

The latest environmental information about our products is available at:
https://www.lenovo.com/us/en/compliance/eco-declaration

Important battery recycling and WEEE information

Take back and recycling information for WEEE and batteries/accumulators in the European Union and the United Kingdom



The crossed-out wheeled bin marking applies only to countries with WEEE and batteries waste regulations including the European Union (EU), and United Kingdom (UK).

Appliances and batteries/accumulators are labeled in accordance with local regulations concerning waste electrical and electronic equipment (WEEE) and waste batteries and waste accumulators. These regulations determine the framework for the return and recycling of used appliances and used batteries/accumulators as applicable within each geography. This label is applied to various products to indicate that the product is not to be thrown away, but rather put in the established collection systems for reclaiming these end of life products.

The label on the battery may also include a chemical symbol for the metal concerned in the battery (Pb for lead, Hg for mercury, and Cd for cadmium).

Users of electrical and electronic equipment (EEE) and users of batteries/accumulators with the crossed-out wheeled bin marking must not dispose of end of life products as unsorted municipal waste, but use the collection framework available to them for the return, recycle, and recovery of WEEE and waste batteries/ accumulators and to minimize any potential effects of EEE and batteries on the environment and human health due to the presence of hazardous substances.

Lenovo electrical and electronic equipment (EEE) may contain parts and components, which at end-of-life might qualify as hazardous waste.

EEE and waste electrical and electronic equipment (WEEE) can be delivered free of charge to the place of sale or any distributor that sells electrical and electronic equipment of the same nature and function as the used EEE or WEEE.

Before placing electrical and electronic equipment (EEE) in the waste collection stream or in waste collection facilities, the end user of equipment containing batteries and/or accumulators must remove those batteries and accumulators for separate collection.

Dispose of lithium batteries and battery packs from Lenovo products:
A coin-cell type lithium battery might be installed inside your Lenovo product. You can find details about the battery in the product documentation. If the battery needs to be replaced, contact your place of purchase or contact Lenovo for service. If you need to dispose of a lithium battery, insulate it with vinyl tape, contact your place of purchase or a waste-disposal operator, and follow their instructions.

Your Lenovo device might contain a lithium-ion battery pack or a nickel metal hydride battery pack. You can find details on the battery pack in the product documentation. If you need to dispose of a battery pack, insulate it with vinyl tape, contact Lenovo sales, service, or your place of purchase, or a waste-disposal operator, and follow their instructions. You also can refer to the instructions provided in the user guide for your product.

For proper collection and treatment, go to:

https://www.lenovo.com/environment

For additional WEEE information, go to:

https://www.lenovo.com/recycling

WEEE information for Hungary

Lenovo, as a producer, bears the cost incurred in connection with the fulfillment of Lenovo's obligations under Hungary Law No. 197/2014 (VIII.1.) subsections (1)-(5) of section 12.

EU ErP (EcoDesign) Directive (2009/125/EC) - external power adapters (Regulation (EU) 2019/1782), Ecodesign for Energy-Related Products Regulations 2010 - UK SI 2010 No. 2617 (Ext PSU), SI 2020 No. 485 (Ntwk Standby), SI 2014 No. 1290 as amended

Lenovo products are compliant with the EU EcoDesign (ErP) Directive and UK EcoDesign for Energy-related Products Regulations. Refer to the following for details. For EU, refer to the system declaration https://www.lenovo.com/us/en/compliance/eu-doc, and for UK refer to the system declaration https://www.lenovo.com/us/en/compliance/uk-doc.

Japan recycling statements

Collect and recycle a disused Lenovo computer or monitor

If you are a company employee and need to dispose of a Lenovo computer or monitor that is the property of the company, you must do so in accordance with the Law for Promotion of Effective Utilization of Resources. Computers and monitors are categorized as industrial waste and should be properly disposed of by an industrial waste disposal contractor certified by a local government. In accordance with the Law for Promotion of Effective Utilization of Resources, Lenovo Japan provides, through its PC Collecting and Recycling Services, for the collecting, reuse, and recycling of disused computers and monitors. For details, visit the Lenovo Web site at:
https://www.lenovo.com/us/en/social_responsibility/sustainability/ptb_japan

Pursuant to the Law for Promotion of Effective Utilization of Resources, the collecting and recycling of home-used computers and monitors by the manufacturer was begun on October 1, 2003. This service is provided free of charge for home-used computers sold after October 1, 2003. For details, go to:
https://www.lenovo.com/us/en/social_responsibility/sustainability/ptb_japan

Dispose of Lenovo computer components

Some Lenovo computer products sold in Japan may have components that contain heavy metals or other environmental sensitive substances. To properly dispose of disused components, such as a printed circuit board or drive, use the methods described above for collecting and recycling a disused computer or monitor.

Dispose of disused lithium batteries from Lenovo computers

A button-shaped lithium battery is installed inside your Lenovo computer to provide power to the computer clock while the computer is off or disconnected from the main power source. If you need to replace it with a new one, contact your place of purchase or contact Lenovo for service. If you need to dispose of a disused lithium battery, insulate it with vinyl tape, contact your place of purchase or an industrial-waste-disposal operator, and follow their instructions.

Disposal of a lithium battery must comply with local ordinances and regulations.

Brazil recycling information

Declarações de Reciclagem no Brasil

Descarte de um Produto Lenovo Fora de Uso

Equipamentos elétricos e eletrônicos não devem ser descartados em lixo comum, mas enviados à pontos de coleta, autorizados pelo fabricante do produto para que sejam encaminhados e processados por empresas especializadas no manuseio de resíduos industriais, devidamente certificadas pelos orgãos ambientais, de acordo com a legislação local.

A Lenovo possui um canal específico para auxiliá-lo no descarte desses produtos. Caso você possua um produto Lenovo em situação de descarte, ligue para o nosso SAC ou encaminhe um e-mail para: reciclar@lenovo.com, informando o modelo, número de série e cidade, a fim de enviarmos as instruções para o correto descarte do seu produto Lenovo.

Recycling information for mainland China

《废弃电器电子产品回收处理管理条例》提示性说明

联想鼓励拥有联想品牌产品的用户当不再需要此类产品时，遵守国家废弃电器电子产品回收处理相关法律法规，将其交给当地具有国家认可的回收处理资质的厂商进行回收处理。更多回收服务信息，请点击进入http://support.lenovo.com.cn/activity/551.htm

Battery recycling information for Taiwan



Restriction of Hazardous Substances (RoHS) Directive of countries and regions

The latest environmental information about Lenovo products is available at:
https://www.lenovo.com/ecodeclaration

European Union (EU) / United Kingdom (UK) RoHS

This Lenovo product, with included parts (cables, cords, and so on) meets the requirements of EU Directive 2011/65/EU (as amended by Directive 2015/863/EU) and UK SI 2012 No. 3032 on the restriction of the use of certain hazardous substances in electrical and electronic equipment ("RoHS recast" or "RoHS 2").

For more information about Lenovo worldwide compliance on RoHS, go to:

https://www.lenovo.com/rohs-communication

Turkish WEEE / RoHS

Türkiye AEEE Yönetmeliğine Uygunluk Beyanı

Bu Lenovo ürünü, T.C. Çevre ve Orman Bakanlığı'nın "Atık Elektrik ve Elektronik Eşyalarda Bazı Zararlı Maddelerin Kullanımının Sınırlandırılmasına Dair Yönetmelik (AEEE)" direktiflerine uygundur.

AEEE Yönetmeliğine Uygundur.

Ukraine RoHS

Цим підтверджуємо, що продукція Леново відповідає вимогам нормативних актів України, які обмежують вміст небезпечних речовин

India RoHS

RoHS compliant as per E-Waste (Management) Rules.

Mainland China RoHS

产品中有害物质的名称及含量

部件名称	有害物质					
	铅(Pb)	汞(Hg)	镉(Cd)	六价铬 (Cr(VI))	多溴连苯 (PBB)	多溴二苯醚 (PBDE)
印刷电路板组件*	X	O	O	O	O	O
硬盘	X	O	O	O	O	O
光驱	X	O	O	O	O	O
内存	X	O	O	O	O	O
电脑I/O 附件	X	O	O	O	O	O
电源	X	O	O	O	O	O
键盘	X	O	O	O	O	O
鼠标	X	O	O	O	O	O
机箱/ 附件	X	O	O	O	O	O
电池	X	O	O	O	O	O

本表格依据 SJ/T 11364 的规定编制。
O：表示该有害物质在该部件所有均质材料中的含量均在 GB/T 26572 规定的限量要求以下。
×：表示该有害物质至少在该部件的某一均质材料中的含量超出 GB/T 26572 规定的限量要求。
注：表中标记“×”的部件，皆因全球技术发展水平限制而无法实现有害物质的替代。
印刷电路板组件*：包括印刷电路板及其零部件、电容和连接器
根据型号的不同，可能不会含有以上的所有部件，请以实际购买机型为准



在中华人民共和国境内销售的电子信息产品必须标识此标志，标志内的数字代表在正常使用状态下的产品的环保使用期限

Taiwan RoHS

單元	限用物質及其化學符號					
	鉛 (Pb)	汞 (Hg)	鎘 (Cd)	六價鉻 (Cr^{+6})	多溴聯苯 (PBB)	多溴二苯醚 (PBDE)
印刷電路板組件	—	○	○	○	○	○
硬碟	—	○	○	○	○	○
光碟機(選配件)	—	○	○	○	○	○
記憶體	—	○	○	○	○	○
電源供應器	—	○	○	○	○	○
鍵盤(選配件)	—	○	○	○	○	○
滑鼠(選配件)	—	○	○	○	○	○
機殼	—	○	○	○	○	○
配件（電源線）	—	○	○	○	○	○
散熱模組	—	○	○	○	○	○

備考1. 〝超出0.1 wt %〞及〝超出0.01 wt %〞係指限用物質之百分比含量超出百分比含量基準值。

備考2. 〝○〞係指該項限用物質之百分比含量未超出百分比含量基準值。

備考3. 〝—〞係指該項限用物質為排除項目。

Electromagnetic emission notices

Federal Communications Commission (FCC) Supplier's Declaration of Conformity

The following information refers to ThinkStation P340 Tiny, machine types: 30DE, 30DF, 30DG, 30DR, 30DS, 30DU, 30DT, 30DX, 30DW, 30DV.

This equipment has been tested and found to comply with the limits for a Class B digital device, pursuant to Part 15 of the FCC Rules. These limits are designed to provide reasonable protection against harmful interference in a residential installation. This equipment generates, uses, and can radiate radio frequency energy and, if not installed and used in accordance with the instructions, may cause harmful interference to radio communications. However, there is no guarantee that interference will not occur in a particular installation. If this equipment does cause harmful interference to radio or television reception, which can be determined by turning the equipment off and on, the user is encouraged to try to correct the interference by one or more of the following measures:

- Reorient or relocate the receiving antenna.
- Increase the separation between the equipment and receiver.
- Connect the equipment into an outlet on a circuit different from that to which the receiver is connected.
- Consult an authorized dealer or service representative for help.

Lenovo is not responsible for any radio or television interference caused by using other than recommended cables and connectors or by unauthorized changes or modifications to this equipment. Unauthorized changes or modifications could void the user's authority to operate the equipment.

This device complies with Part 15 of the FCC Rules. Operation is subject to the following two conditions: (1) this device may not cause harmful interference, and (2) this device must accept any interference received, including interference that may cause undesired operation.

Responsible Party:
Lenovo (United States) Incorporated
7001 Development Drive

Morrisville, NC 27560
Email: FCC@lenovo.com

Industry Canada compliance statement

CAN ICES-3(B)/NMB-3(B)

European Union (EU) / United Kingdom (UK) — Electromagnetic Compatibility Compliance

This product is in conformity with the protection requirements of EU Council Directive 2014/30/EU on the approximation of the laws of the Member States, as well as UK SI 2016 No. 1091 with amendments, relating to the electromagnetic compatibility limits for Class B equipment. These Class B requirements are intended to offer adequate protection to broadcast services within residential environments.

German Class B compliance statement

Hinweis zur Einhaltung der Klasse B zur elektromagnetischen Verträglichkeit

Dieses Produkt entspricht den Schutzanforderungen der EU-Richtlinie zur elektromagnetischen Verträglichkeit Angleichung der Rechtsvorschriften über die elektromagnetische Verträglichkeit in den EU-Mitgliedsstaaten und hält die Grenzwerte der Klasse B der Norm gemäß Richtlinie.

Um dieses sicherzustellen, sind die Geräte wie in den Handbüchern beschrieben zu installieren und zu betreiben. Des Weiteren dürfen auch nur von der Lenovo empfohlene Kabel angeschlossen werden. Lenovo übernimmt keine Verantwortung für die Einhaltung der Schutzanforderungen, wenn das Produkt ohne Zustimmung der Lenovo verändert bzw. wenn Erweiterungskomponenten von Fremdherstellern ohne Empfehlung der Lenovo gesteckt/eingebaut werden.

Zulassungsbescheinigung laut dem Deutschen Gesetz über die elektromagnetische Verträglichkeit von Betriebsmitteln, EMVG vom 20. Juli 2007 (früher Gesetz über die elektromagnetische Verträglichkeit von Geräten), bzw. der EU Richtlinie 2014/30/EU, der EU Richtlinie 2014/53/EU Artikel 3.1b), für Geräte der Klasse B.

Dieses Gerät ist berechtigt, in Übereinstimmung mit dem Deutschen EMVG das EG-Konformitätszeichen - CE - zu führen. Verantwortlich für die Konformitätserklärung nach Paragraf 5 des EMVG ist die Lenovo (Deutschland) GmbH, Meitnerstr. 9, D-70563 Stuttgart.

Japan VCCI Class B compliance statement

この装置は、クラスB機器です。この装置は、住宅環境で使用することを目的としていますが、この装置がラジオやテレビジョン受信機に近接して使用されると、受信障害を引き起こすことがあります。
取扱説明書に従って正しい取り扱いをして下さい。

VCCI-B

Japan compliance statement for products which connect to the power mains with rated current less than or equal to 20 A per phase

日本の定格電流が 20A/相 以下の機器に対する高調波電流規制
高調波電流規格 JIS C 61000-3-2 適合品

Japan notice for ac power cord

The ac power cord shipped with your product can be used only for this specific product. Do not use the ac power cord for other devices.

本製品およびオプションに電源コード・セットが付属する場合は、
それぞれ専用のものになっていますので他の電気機器には使用し
ないでください。

Other compliance and TCO Certified information of countries and regions

This section provides other compliance information about Lenovo products.

Certification-related information

Product name: ThinkStation P340 Tiny

Machine types: 30DE, 30DF, 30DG, 30DR, 30DS, 30DU, 30DT, 30DX, 30DW, 30DV

The latest compliance information is available at:
https://www.lenovo.com/us/en/compliance

TCO Certified

Selected models are TCO Certified and bear the TCO Certified logo.

Note: TCO Certified is an international third-party sustainability certification for IT products. For details, go to https://www.lenovo.com/us/en/compliance/tco.

Export classification notice

This product is subject to the United States Export Administration Regulations (EAR) and has an Export Classification Control Number (ECCN) of 5A992.c. It can be re-exported except to any of the embargoed countries in the EAR E1 country list.

Lenovo product service information for Taiwan

委製商/進口商名稱: 荷蘭商聯想股份有限公司台灣分公司
進口商地址: 台北市中山區樂群三路128號16樓
進口商電話: 0800-000-702 (代表號)

Taiwan precautionary vision statement

警語：使用過度恐傷害視力

注意事項：

- 使用30分鐘請休息10分鐘。
- 未滿2歲幼兒不看螢幕，2歲以上每天看螢幕不要超過1小時。

Keyboard and mouse compliance statement for Taiwan

本產品隨貨附已取得經濟部標準檢驗局認可之PS/2或USB的鍵盤與滑鼠一組

Eurasian compliance mark

Brazil audio notice

Ouvir sons com mais de 85 decibéis por longos períodos pode provocar danos ao sistema auditivo.

ENERGY STAR model information

ENERGY STAR is a joint program of the U.S. Environmental Protection Agency and the U.S. Department of Energy aimed at saving money and protecting the environment through energy efficient products and practices.

Lenovo is proud to offer products with the ENERGY STAR certified designation. Lenovo computers, if carry an ENERGY STAR mark, have been designed and tested to conform to the ENERGY STAR program requirements for computers as prescribed by the U.S. Environmental Protection Agency. For a certified computer, an ENERGY STAR mark may be affixed to the product, the product packaging, or displayed electronically on the E-label screen or the power settings interface.

By using ENERGY STAR compliant products and taking advantage of the power management features of your computer, you reduce the consumption of electricity. Reduced electrical consumption contributes to potential financial savings, a cleaner environment, and the reduction of greenhouse gas emissions. For more information about ENERGY STAR, go to https://www.energystar.gov.

Lenovo encourages you to make efficient use of energy an integral part of your day-to-day operations. To help in this endeavor, Lenovo has preset a default power plan. To change the power plan, see “Set the power plan” on page 9.

Appendix F. Notices and trademarks

Notices

Lenovo may not offer the products, services, or features discussed in this document in all countries. Consult your local Lenovo representative for information on the products and services currently available in your area. Any reference to a Lenovo product, program, or service is not intended to state or imply that only that Lenovo product, program, or service may be used. Any functionally equivalent product, program, or service that does not infringe any Lenovo intellectual property right may be used instead. However, it is the user's responsibility to evaluate and verify the operation of any other product, program, or service.

Lenovo may have patents or pending patent programs covering subject matter described in this document. The furnishing of this document does not give you any license to these patents. You can send license inquiries, in writing, to:

Lenovo (United States), Inc.
8001 Development Drive
Morrisville, NC 27560
U.S.A.
Attention: Lenovo Director of Licensing

LENOVO PROVIDES THIS PUBLICATION "AS IS" WITHOUT WARRANTY OF ANY KIND, EITHER EXPRESS OR IMPLIED, INCLUDING, BUT NOT LIMITED TO, THE IMPLIED WARRANTIES OF NON-INFRINGEMENT, MERCHANTABILITY OR FITNESS FOR A PARTICULAR PURPOSE. Some jurisdictions do not allow disclaimer of express or implied warranties in certain transactions, therefore, this statement may not apply to you.

Changes are made periodically to the information herein; these changes will be incorporated in new editions of the publication. To provide better service, Lenovo reserves the right to improve and/or modify the products and software programs described in the manuals included with your computer, and the content of the manual, at any time without additional notice.

The software interface and function and hardware configuration described in the manuals included with your computer might not match exactly the actual configuration of the computer that you purchase. For the configuration of the product, refer to the related contract (if any) or product packing list, or consult the distributor for the product sales. Lenovo may use or distribute any of the information you supply in any way it believes appropriate without incurring any obligation to you.

The products described in this document are not intended for use in implantation or other life support applications where malfunction may result in injury or death to persons. The information contained in this document does not affect or change Lenovo product specifications or warranties. Nothing in this document shall operate as an express or implied license or indemnity under the intellectual property rights of Lenovo or third parties. All information contained in this document was obtained in specific environments and is presented as an illustration. The result obtained in other operating environments may vary.

Lenovo may use or distribute any of the information you supply in any way it believes appropriate without incurring any obligation to you.

Any references in this publication to non-Lenovo Web sites are provided for convenience only and do not in any manner serve as an endorsement of those Web sites. The materials at those Web sites are not part of the materials for this Lenovo product, and use of those Web sites is at your own risk.

© Copyright Lenovo 2020, 2021

Any performance data contained herein was determined in a controlled environment. Therefore, the result obtained in other operating environments may vary significantly. Some measurements may have been made on development-level systems and there is no guarantee that these measurements will be the same on generally available systems. Furthermore, some measurements may have been estimated through extrapolation. Actual results may vary. Users of this document should verify the applicable data for their specific environment.

This document is copyrighted by Lenovo and is not covered by any open source license, including any Linux agreement(s) which may accompany software included with this product. Lenovo may update this document at any time without notice.

For the latest information or any questions or comments, contact or visit the Lenovo Web site:
https://pcsupport.lenovo.com

Trademarks

LENOVO, LENOVO logo, THINKSTATION, and THINKSTATION logo are trademarks of Lenovo. Intel, Optane, and Core are trademarks of Intel Corporation or its subsidiaries in the U.S. and/or other countries. Microsoft, Windows, Direct3D, and Cortana are trademarks of the Microsoft group of companies. DisplayPort and VESA are trademarks of the Video Electronics Standards Association. The terms HDMI and HDMI High-Definition Multimedia Interface are trademarks or registered trademarks of HDMI Licensing LLC in the United States and other countries. Wi-Fi and Miracast are registered trademarks of Wi-Fi Alliance. USB-C is a trademark of USB Implementers Forum. All other trademarks are the property of their respective owners. © 2020 Lenovo.


Lenovo