P330
User Guide



Read this first

Before using this documentation and the product it supports, ensure that you read and understand the following:

- Appendix B “Important safety information” on page 97
- *Safety and Warranty Guide*
- *Setup Guide*

Second Edition (August 2020)

© Copyright Lenovo 2020.

LIMITED AND RESTRICTED RIGHTS NOTICE: If data or software is delivered pursuant to a General Services Administration “GSA” contract, use, reproduction, or disclosure is subject to restrictions set forth in Contract No. GS-35F-05925.

Contents

About this documentation iii

Chapter 1. Meet your computer 1

Front view 1
Rear view 2
Statement on USB transfer rate 5
Internal storage drives 5

Chapter 2. Get started with your computer 9

Get started with Ubuntu Desktop 9
Connect to networks 9
Connect to the wired Ethernet 9
Connect to Wi-Fi networks (for selected models) 10
Use multimedia 10
Use audio 10
Connect to an external display 10

Chapter 3. Explore your computer . . 11

Manage power 11
Set power button behaviors 11
Set the power plan 11
Transfer data 11
Connect to a Bluetooth-enabled device (for selected models) 11
Use the optical drive (for selected models) . . 12
Use a media card (for selected models) 12
Purchase accessories 12

Chapter 4. Secure your computer information 13

Use passwords 13
Use computrace Agent software embedded in firmware (for selected models) 14
Use BIOS security solutions 14
Erase all storage drive data 14
Use the cover presence switch 14
Use Intel BIOS guard 15
Use Smart USB Protection 15

Chapter 5. UEFI BIOS 17

What is UEFI BIOS 17
Enter the BIOS menu 17
Navigate in the BIOS interface 17
Change the display language of UEFI BIOS 17
Change the display mode of UEFI BIOS 18
Set the system date and time 18
Change the startup sequence 18
Change BIOS settings before installing a new operating system 19
Update UEFI BIOS 19

Chapter 6. Hardware removal and installation 21

Handling static-sensitive devices 21
Customer Replaceable Units 21
Preparing your computer 22
Removing and installing hardware 25
External options 25
Slim optical drive 25
PCIe card 28
Full-length PCIe card 31
M.2 solid-state drive 34
Memory module 41
Device in the flex bay 43
Storage drive in the front-access storage enclosure 46
Device in the flex storage enclosure 53
Coin-cell battery 62
Cover presence switch 63
Power supply assembly 64
Storage drive in the storage-drive bay 65
Type-1 storage-drive cage 73
Type-2 storage-drive cage 82
Heat-sink-and-fan assembly 85
Completing the parts replacement 87

Chapter 7. Help and support 91

Self-help resources 91
Call Lenovo 92
Before you contact Lenovo 92
Lenovo Customer Support Center 93
Purchase additional services 94

Appendix A. Supplemental information about the Ubuntu operating system 95

Appendix B. Important safety information 97

Appendix C. Accessibility and ergonomic information 111

© Copyright Lenovo 2020

Appendix D. Compliance and TCO Certified information 113

Appendix E. Notices and trademarks 123

About this documentation

- Illustrations in this documentation might look different from your product.
- Depending on the model, some optional accessories, features, and software programs might not be available on your computer.
- Depending on the version of operating systems and programs, some user interface instructions might not be applicable to your computer.
- Documentation content is subject to change without notice. Lenovo makes constant improvements on the documentation of your computer, including this *User Guide*. To get the latest documentation, go to: https://pcsupport.lenovo.com
- Canonical® makes periodic feature changes to the Ubuntu® operating system through Software Updates. As a result, some information in this documentation might become outdated. Refer to Ubuntu resources for the latest information.

© Copyright Lenovo 2020

Chapter 1. Meet your computer

Front view

Note: The computer hardware might look slightly different from the illustration.

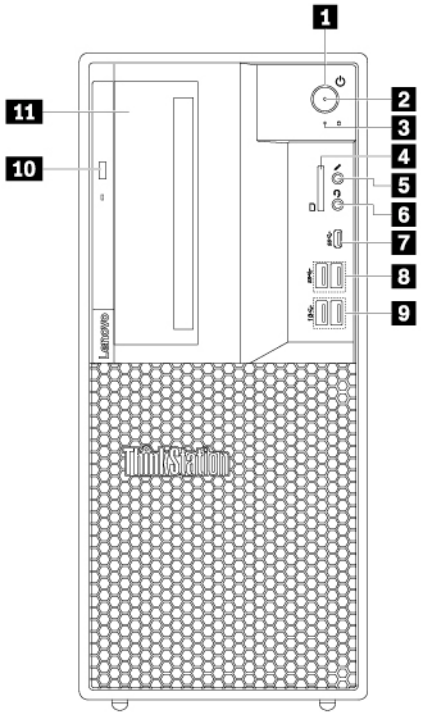

Figure 1. Front connectors, controls, and indicators

1 Power button	2 Power indicator
3 Storage-drive activity indicator	4 SD card slot (available on some models)
5 Microphone connector	6 Headset connector
7 USB-C connector	8 USB 3.1 connectors Gen 1 (2)
9 USB 3.1 connectors Gen 2 (2)	10 Slim optical-drive eject button (available on some models)
11 Flex bay (available on some models)	

1 Power button

Press the power button to turn on your computer. If your computer is unresponsive, you can turn off the computer by pressing and holding the power button for four or more seconds.

2 Power indicator

When the power indicator is on, the computer is turned on.

© Copyright Lenovo 2020

3 Storage-drive activity indicator

This indicator shows the status of the internal storage drives (such as hard disk drives or solid-state drives).

On: The storage drives are active and data is being transferred.

Off (when the computer is powered on): The storage drives are not in use or no data is being transferred.

4 SD card slot (available on some models)

An SD card is installed on some computer models.

5 Microphone connector

Use this connector to attach a microphone to your computer when you want to record sound or if you use speech-recognition software.

6 Headset connector

Use this connector to attach a headset to your computer.

7 USB-C connector

The USB-C connector supports the USB Type-C™ standard. With an appropriate USB-C cable connected, you can use the connector to transfer data or charge your device.

8 USB 3.1 connectors Gen 1 (2)

Connect USB-compatible devices, such as a USB keyboard, a USB mouse, a USB storage device, or a USB printer.

9 USB 3.1 connectors Gen 2 (2)

With greater data transfer rate, the USB 3.1 connector Gen 2 is used to connect USB-compatible devices, such as a USB keyboard, a USB mouse, a USB storage device, or a USB printer.

10 Slim optical-drive eject button (available on some models)

Press the button to eject the tray of the slim optical drive. To close the tray, push the tray inward until you hear a click.

11 Flex bay (available on some models)

Some computer models come with a flex bay. Depending on your computer model, one of the following devices might be installed in the flex bay:

- Flex module
- Flex storage enclosure
- Front-access storage enclosure

Rear view

Some connectors on the rear of your computer are color-coded to help you determine where to connect the cables on your computer.

Note: The computer hardware might look slightly different from the illustration.

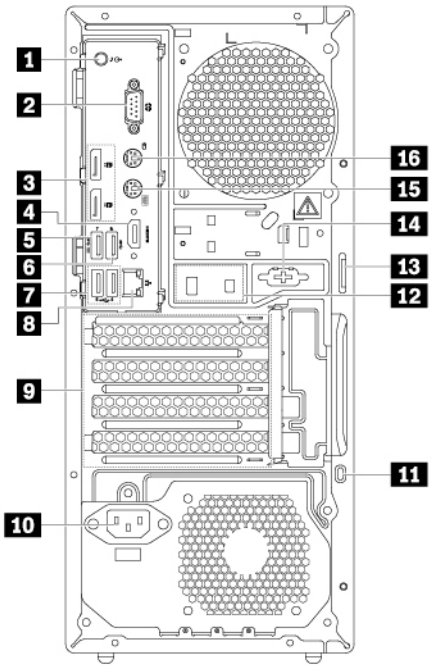

Figure 2. Rear view

1 Audio line-out connector	2 Serial connector
3 DisplayPort connectors (2)	4 DisplayPort connector or HDMI™ connector (available on some models)
5 USB 3.1 connector Gen 1	6 USB 3.1 connector Gen 1
7 USB 2.0 connectors (2)	8 Ethernet connector
9 PCIe card area*	10 Power-cord connector
11 Security-lock slot	12 Cable-lock slots
13 Padlock loop	14 Serial connector (available on some models)
15 PS/2 keyboard connector (available on some models)	16 PS/2 mouse connector (available on some models)

Notes: * A discrete graphics card or a network adapter can be installed in the appropriate Peripheral Component Interconnect Express (PCIe) card slot. If such a card is installed, use the connectors on the card instead of the corresponding connectors on the computer to optimize the performance. Depending on your computer model, the preinstalled cards might vary. One or more graphics cards might be installed to provide the following connectors:

- Digital Visual Interface (DVI) connector
- DisplayPort® connector
- Mini DisplayPort® connector

DVI monitor connector

Use this connector to attach a DVI monitor or other compatible devices.

DisplayPort connector

Use this connector to attach a high-performance monitor, a direct-drive monitor, or other compatible devices.

Mini DisplayPort connector

Use this connector to attach a high-performance monitor, a direct-drive monitor, or other compatible devices. The Mini DisplayPort connector is a miniaturized version of a DisplayPort connector.

1 Audio line-out connector

The audio line-out connector is used to send audio signals from the computer to external devices, such as headphones.

2 Serial connector

Use this connector to attach an external modem, a serial printer, or other devices that use a 9-pin serial connector.

3 DisplayPort connectors (2)

Use this connector to attach a high-performance monitor, a direct-drive monitor, or other compatible devices.

4 DisplayPort connector or HDMI connector (available on some models)

- **DisplayPort connector**

  Use this connector to attach a high-performance monitor, a direct-drive monitor, or other compatible devices.
- **HDMI connector**

  The High-Definition Multimedia Interface (HDMI) connector is a digital audio and video interface that can connect a compatible digital audio device or video monitor, such as a DVD player or a high-definition digital television (HDTV).

5 USB 3.1 connector Gen 1

Connect USB-compatible devices, such as a USB keyboard, a USB mouse, a USB storage device, or a USB printer. This connector supports the smart power on feature. When you connect a supported keyboard to this connector, you can turn on the computer or wake it up from hibernation mode by pressing Alt+P on the keyboard. You can enable or disable the smart power on feature from the Setup Utility program.

6 USB 3.1 connector Gen 1

Connect USB-compatible devices, such as a USB keyboard, a USB mouse, a USB storage device, or a USB printer.

7 USB 2.0 connectors (2)

Use this connector to attach a USB-compatible device, such as a USB keyboard, mouse, storage drive, or printer.

8 Ethernet connector

Connect an Ethernet cable for a local area network (LAN).

Note: To operate the computer within Federal Communications Commission (FCC) Class B limits, use a Category 5 Ethernet cable.

9 PCIe card area

To further improve the computer performance, you can install PCIe cards into this area. Depending on your computer model, the preinstalled cards might vary.

10 Power-cord connector

Connect the power cord to your computer for power supply.

11 Security-lock slot

Attach a Kensington-style cable lock to the security-lock slot to secure your computer.

12 Cable lock slots

Used to secure a cable lock.

13 Padlock loop

Connect a padlock to secure your computer.

14 Serial connector (available on some models)

Use this connector to attach an external modem, a serial printer, or other devices that use a 9-pin serial connector.

15 PS/2 keyboard connector (available on some models)

Use this connector to attach a Personal System/2 (PS/2) keyboard.

16 PS/2 mouse connector (available on some models)

Use this connector to attach a PS/2 mouse, a trackball, or other pointing devices.

Statement on USB transfer rate

Depending on many factors such as the processing capability of the host and peripheral devices, file attributes, and other factors related to system configuration and operating environments, the actual transfer rate using the various USB connectors on this device will vary and will be slower than the data rate listed below for each corresponding device.

USB device	Data rate (Gbit/s)
3.2 Gen 1 / 3.1 Gen 1	5
3.2 Gen 2 / 3.1 Gen 2	10
3.2 Gen 2 × 2	20

Internal storage drives

Internal storage drives are devices that your computer uses to read and store data. You can add drives to your computer to increase storage capacity and enable your computer to read other types of media. Internal storage drives are installed in bays.

When you remove or install an internal storage drive, note the type and size of the drive that each bay supports and correctly connect the required cables. Refer to the appropriate section in Chapter 6 “Hardware removal and installation” on page 21 for instructions on how to remove or install internal storage drives for your computer.

The following illustration shows the locations of the storage drives.

Note: The computer hardware might look slightly different from the illustration.

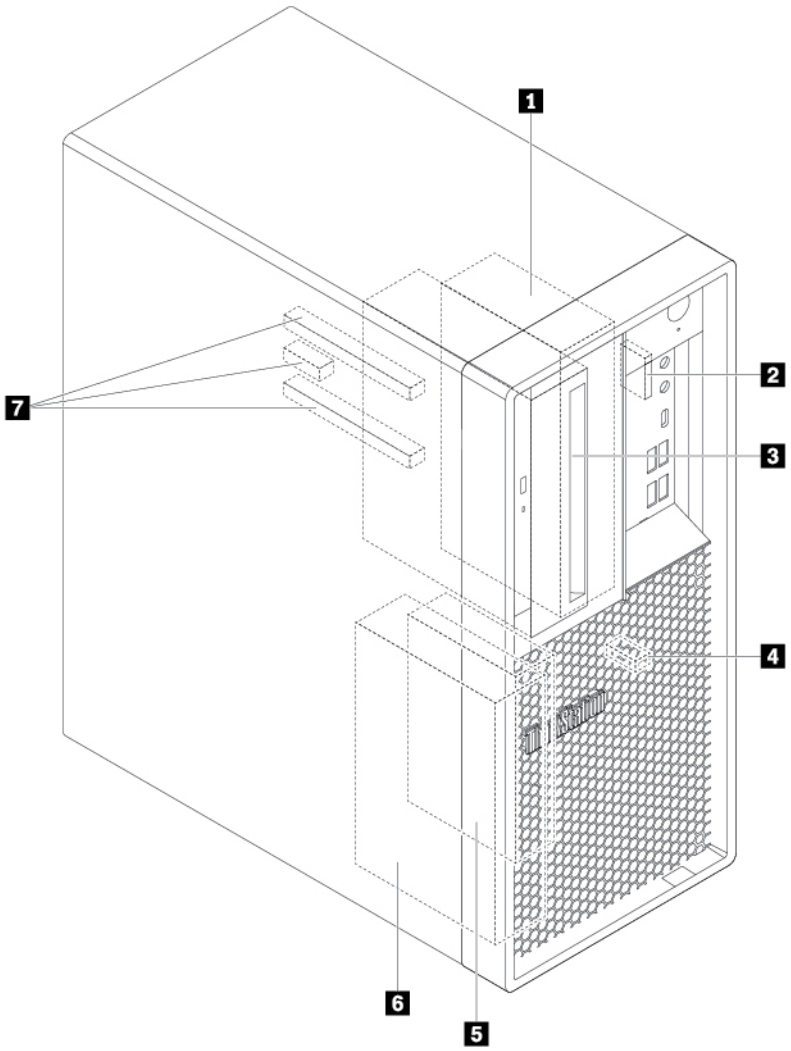

Figure 3. Storage-drive bay locations

1 Type-1 storage-drive cage	2 SD card slot (available on some models)
3 Flex bay (available on some models)	4 M.2 solid-state drive slot
5 Type-2 storage-drive cage	6 Type-1 storage-drive bay
7 PCIe card slots (3)	

1 Type-1 storage-drive cage

You can install a 3.5-inch storage drive or a 2.5-inch storage drive in this cage.

2 SD card slot (available on some models)

An SD card is installed in some computer models.

3 Flex bay (available on some models)

Depending on your computer model, one of the following devices might be installed in the flex bay:

- Flex module
- Front-access storage enclosure
- Flex storage enclosure

4 M.2 solid-state drive slot

One M.2 solid-state drive is installed in some computer models.

5 Type-2 storage-drive cage

You can install a 2.5-inch storage drive in this cage.

6 Type-1 storage-drive bay

You can install a 3.5-inch storage drive or a 2.5-inch storage drive in the storage-drive bay.

7 PCIe card slots (3)

You can install compatible PCIe cards and PCIe solid-state drives in the PCIe card slots.

Chapter 2. Get started with your computer

Get started with Ubuntu Desktop

Learn the basics of Ubuntu and start working with it right away. For more information about Ubuntu, see the Ubuntu documentation site at: https://help.ubuntu.com/lts/ubuntu-help/index.html.

The Gnome desktop is installed by default and is designed to be simple and easy to use. Details on using Gnome are available by launching the Help application or online at https://help.gnome.org/users/.

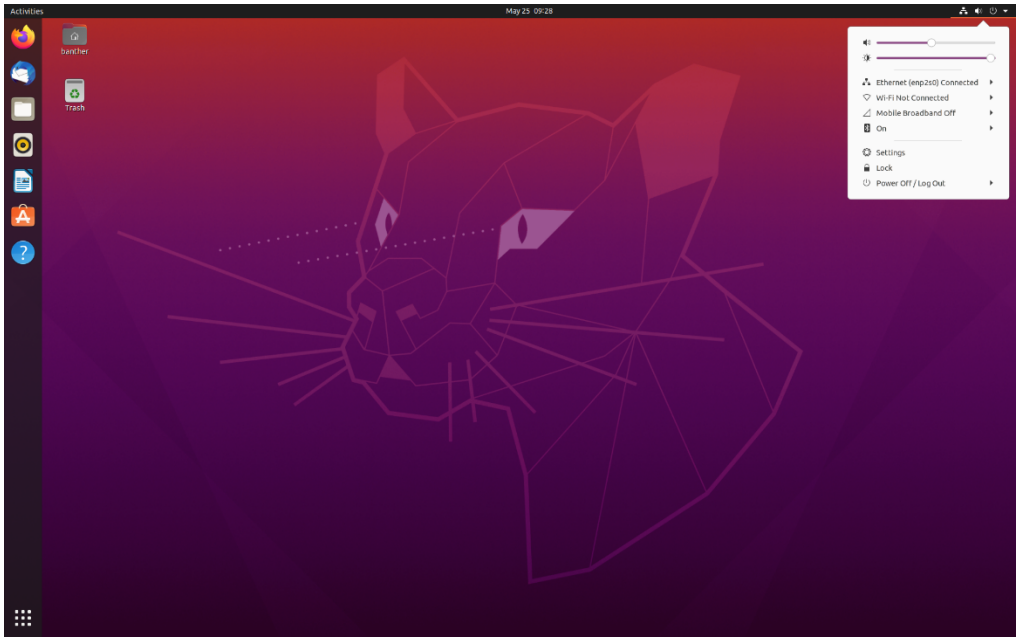

Launch an app

- Press the Super key (with the Windows logo) or open the Activities menu on the top left and type in the name of the application you want to launch.
- Click the **Show Applications** button on the lower left, and select the application you want to launch.

Launch settings

Open the system menu from the top-right corner and click **Settings**.

Connect to networks

Your computer helps you connect to the world through a wired or wireless network.

Connect to the wired Ethernet

Connect your computer to a local network through the Ethernet connector on your computer with an Ethernet cable.

© Copyright Lenovo 2020

Connect to Wi-Fi networks (for selected models)

If your computer includes a wireless LAN module, you can connect your computer to Wi-Fi® networks. The wireless LAN module on your computer may support different standards. For some countries or regions, use of 802.11ax may be disabled according to local regulations.

1. Open the system menu from the top-right corner and expand the Wi-Fi section of the menu.
2. Click **Select Network**. A list of available wireless networks is displayed.
3. Select a network available for connection. Provide required information, if needed.

Use multimedia

Use your computer for business or entertainment with the devices (such as a camera, a monitor, or speakers).

Use audio

To enhance the audio experience, connect speakers, headphones, or a headset to the audio connector.

Change the sound settings

1. Open the system menu from the top-right corner and click **Settings**.
2. Click **Sound**.
3. Change the settings as you prefer.

Connect to an external display

Connect to a wired display

Connect your computer to a projector or a monitor to give presentations or expand your workspace.

Display mode

Go to **Settings** → **Devices** → **Displays**. Then, select a display mode of your preference.

- **Join Displays**: Extend the video output from your primary display to the secondary display. You can drag and move items between two displays.
- **Mirror**: Display the same video output on both the primary display and the secondary display.
- **Single Display**: Display the video output on only one display attached.

Display arrangement

Go to **Settings** → **Devices** → **Displays**. Then, click **Primary Display** and select one of the displays as the primary display.

Change display settings

Go to **Settings** → **Devices** → **Displays**. Then, you can change the settings for both the primary display and other displays. You can change the resolution, orientation and refresh rate.

Chapter 3. Explore your computer

Manage power

Use the information in this section to achieve the best balance between performance and power efficiency.

Set power button behaviors

You can define what the power button does according to your preference. For example, by pressing the power button, you can turn off the computer or put the computer to sleep or hibernation mode.

To change what the power button does:

1. Open the system menu from the top-right corner and click **Settings**.
2. Click **Power**.
3. In the **Suspend & Power Button** section choose the power button action as you prefer.

Set the power plan

For ENERGY STAR® compliant computers, the following power plan takes effect when your computers have been idle for a specified duration:

Table 1. Default power plan (when plugged into ac power)

• Turn off the display: After 5 minutes • Put the computer to sleep: After 60 minutes

To awaken the computer from Sleep mode, press any key on your keyboard.

To reset the power plan to achieve the best balance between performance and power saving:

1. Open the system menu from the top-right corner and click **Settings**.
2. Click **Power**.
3. Choose or customize a power plan of your preference.

Transfer data

Quickly share your files using the built-in Bluetooth technology among devices with the same features. You also can install a disc or media card to transfer data.

Connect to a Bluetooth-enabled device (for selected models)

You can connect all types of Bluetooth-enabled devices to your computer, such as a keyboard, a mouse, a smartphone, or speakers. To ensure that the connection is successful, place the devices 10 meters (33 feet), at most, from the computer.

1. Turn on Bluetooth on the computer.
   a. Open the system menu from the top-right corner and then click **Settings → Bluetooth**.
   b. In the Bluetooth section enable Bluetooth with the toggle button at the top.
2. Any discoverable devices will be shown in the **Devices** list.

© Copyright Lenovo 2020

3. Select a Bluetooth device, and then follow the on-screen instructions.

Your Bluetooth device and computer will automatically connect the next time if the two devices are in range of each other with Bluetooth turned on. You can use Bluetooth for data transfer or remote control and communication.

Use the optical drive (for selected models)

If your computer has an optical drive, read the following information.

Install or remove a disc

1. With the computer on, press the eject button on the optical drive. The tray slides out of the drive.
2. Insert a disc into the tray or remove a disc from the tray, and then push the tray back into the drive.

Note: If the tray does not slide out of the drive when you press the eject button, turn off the computer. Then, insert a straightened paper clip into the emergency-eject hole adjacent to the eject button. Use the emergency eject only in an emergency.

Record a disc

1. Insert a recordable disc into the optical drive that supports recording.
2. In the **Blank CD/DVD-R Disc** notification that pops up at the bottom of the screen, select **Open with CD/DVD Creator**.
3. Follow the on-screen instructions.

Use a media card (for selected models)

If your computer has a SD-card slot, read the following information.

Install a media card

1. Locate the SD-card slot.
2. Ensure that the metal contacts on the card are facing the ones in the SD-card slot. Insert the card firmly into the SD-card slot until it is secured in place.

Remove a media card

Attention: Before removing a media card, unmount the card from the operating system first. Otherwise, data on the card might get corrupted or lost.

1. Launch the **Files** application.
2. Select the unmount icon next to the card and unmount the card from the operating system.
3. Press the card and remove it from your computer. Store the card safely for future use.

Purchase accessories

Lenovo has a number of hardware accessories and upgrades to help expand the capabilities of your computer. Options include memory modules, storage devices, network cards, power adapters, keyboards, mice, and more.

To shop at Lenovo, go to https://www.lenovo.com/accessories.

Chapter 4. Secure your computer information

Use passwords

Password types

You can set the following passwords in UEFI (Unified Extensible Firmware Interface) BIOS (Basic Input/Output System) to prevent unauthorized access to your computer. However, you are not prompted to enter any UEFI BIOS password when your computer resumes from sleep mode.

- Power-on password

  When a power-on password is set, you are prompted to enter a valid password each time the computer is turned on. The computer cannot be used until the valid password is entered.

- Supervisor password

  Setting a supervisor password deters unauthorized users from changing configuration settings. If you are responsible for maintaining the configuration settings of several computers, you might want to set a supervisor password.

  When a supervisor password is set, you are prompted to enter a valid password each time you try to enter the BIOS menu.

  If both the power-on password and supervisor password are set, you can enter either password. However, you must use your supervisor password to change any configuration settings.

- Hard disk password

  Setting a hard disk password prevents unauthorized access to the data on the storage drive. When a hard disk password is set, you are prompted to enter a valid password each time you try to access the storage drive.

  Note: After you set a hard disk password, your data on the storage drive is protected even if the storage drive is removed from one computer and installed in another.

- System management password (for selected models)

  You can enable the system management password to have the same authority as the supervisor password to control security related features. To customize the authority of the system management password through the UEFI BIOS menu:

  1. Restart the computer. When the logo screen is displayed, press F1 or Fn+F1.
  2. Select **Security → System Management Password Access Control**.
  3. Follow the on-screen instructions.

  If you have set both the supervisor password and the system management password, the supervisor password overrides the system management password.

Set, change, and remove a password

Before you start, print these instructions.

1. Restart the computer. When the logo screen is displayed, press F1 or Fn+F1.
2. Select **Security**.
3. Depending on the password type, select **Set Supervisor Password**, **Set Power-On Password**, **Set System Management Password**, or **Hard Disk Password** and press Enter.
4. Follow the on-screen instructions to set, change, or remove a password.
5. Press F10 or Fn+F10 to save the changes and exit.

© Copyright Lenovo 2020

You should record your passwords and store them in a safe place. If you forget the passwords, you can contact a Lenovo-authorized service provider to have the passwords removed.

Notes:

- If the supervisor password is forgotten, it might not be removed by clearing CMOS depending on your BIOS settings.
- If the hard disk password is forgotten, Lenovo cannot remove the password or recover data from the storage drive.

Use computrace Agent software embedded in firmware (for selected models)

The Computrace Agent software is an IT asset management and computer theft recovery solution. The software detects if changes have been made on the computer, such as hardware, software, or the computer call-in location. You might have to purchase a subscription to activate the Computrace Agent software.

Use BIOS security solutions

This section provides BIOS solutions to secure your computer and information.

Erase all storage drive data

It is recommended that you erase all storage drive data before recycling a storage drive or the computer.

To erase all storage drive data:

1. Set a hard disk password for the storage drive you will recycle. See “Use passwords” on page 13.
2. Restart the computer. When the logo screen is displayed, press F1 or Fn+F1.
3. Select **Security → Hard Disk Password → Security Erase HDD Data** and press Enter.
4. Select the storage drive you will recycle and press Enter.
5. A message is displayed, prompting you to confirm the operation. Select **Yes** and press Enter. The erasing process begins.

   Note: During the erasing process, the power button and the keyboard are disabled.
6. After the erasing process is completed, a message is displayed, prompting you to reset the system. Select **Continue**.

   Note: Depending on the storage drive capacity, the erasing process will take half an hour to three hours.
7. After the resetting process is completed, one of the following will happen:
   - If the data on the system storage drive is erased, you will be prompted that no operating system is available.
   - If the data on the non-system storage drive is erased, the computer restarts automatically.

Use the cover presence switch

The cover presence switch prevents the computer from logging in to the operating system when the computer cover is not properly installed or closed.

To enable the cover presence switch connector on the system board:

1. Restart the computer. When the logo screen is displayed, press F1 or Fn+F1.
2. Select **Security → Cover Tamper Detected** and press Enter.

3. Select **Enabled** and press Enter.
4. Press F10 or Fn+F10 to save the changes and exit.

When the cover presence switch connector on the system board is enabled, if the cover presence switch detects that the computer cover is not correctly installed or closed, an error message will be displayed when you turn on the computer. To bypass the error message and log in to the operating system:

1. Properly install or close the computer cover.
2. Enter the BIOS menu, save and then exit.

Use Intel BIOS guard

The BIOS guard module cryptographically verifies all the BIOS updates to the system BIOS flash. Therefore, the malware is blocked from attacking the BIOS.

Use Smart USB Protection

The Smart USB Protection function is a security function that helps prevent data from being copied from the computer to USB storage devices connected to the computer. You can set the Smart USB Protection function to one of the following modes:

- **Disabled** (default setting): You can use the USB storage devices without limitation.
- **Read Only**: You cannot copy data from the computer to the USB storage devices. However, you can access or modify data on the USB storage devices.
- **No Access**: You cannot access the USB storage devices from the computer.

To configure the Smart USB Protection function:

1. Restart the computer. When the logo screen is displayed, press F1 or Fn+F1.
2. Select **Security → Smart USB Protection** and press Enter.
3. Select the desired setting and press Enter.
4. Press F10 or Fn+F10 to save the changes and exit.

Chapter 5. UEFI BIOS

This chapter provides information about configuring and updating UEFI BIOS, and clearing CMOS.

What is UEFI BIOS

Note: The operating system settings might override any similar settings in UEFI BIOS.

UEFI BIOS is the first program that the computer runs when the computer is turned on. UEFI BIOS initializes the hardware components and loads the operating system and other programs. Your computer comes with a setup program with which you can change UEFI BIOS settings.

Enter the BIOS menu

Restart the computer. When the logo screen is displayed, press F1 or Fn+F1 to enter the BIOS menu.

Note: If you have set BIOS passwords, enter the correct passwords when prompted. You also can select **No** or press Esc to skip the password prompt and enter the BIOS menu. However, you cannot change the system configurations that are protected by passwords.

Navigate in the BIOS interface

Attention: The default configurations are already optimized for you in **boldface**. Improper change of the configurations might cause unexpected results.

Depending on your keyboard, you can navigate in the BIOS interface by pressing the following keys, or combinations of Fn and the following keys:

F1 or Fn+F1	Display the General Help screen.
Esc or Fn+Esc	Exit the submenu and return to the parent menu.
↑ ↓ or Fn+↑ ↓	Locate an item.
← → or Fn+← →	Select a tab.
+/– or Fn++/–	Change to a higher or lower value.
Enter	Enter the selected tab or submenu.
F9 or Fn+F9	Restore to the default settings.
F10 or Fn+F10	Save your configuration and exit.

Change the display language of UEFI BIOS

UEFI BIOS supports three or four display languages: English, French, simplified Chinese, and Russian (for selected models).

To change the display language of UEFI BIOS:

1. Select **Main → Language** and press Enter.
2. Set the display language as desired.

© Copyright Lenovo 2020

Change the display mode of UEFI BIOS

You can use UEFI BIOS in the graphic mode or the text mode according to your needs.

To change the display mode of UEFI BIOS:

1. Restart the computer. When the logo screen is displayed, press F1 or Fn+F1.
2. Select **Main → Setup Mode Select** and press Enter.
3. Set the display mode as desired.

Set the system date and time

1. Restart the computer. When the logo screen is displayed, press F1 or Fn+F1.
2. Select **Main → System Time & Date** and press Enter.
3. Set the system date and time as desired.
4. Press F10 or Fn+F10 to save the changes and exit.

Change the startup sequence

If the computer does not start up from a device as expected, you can change the startup device sequence permanently or select a temporary startup device.

Change the startup device sequence permanently

1. Depending on the type of the storage device, do one of the following:
   - If the storage device is internal, go to step 2.
   - If the storage device is a disc, ensure that the computer is on or turn on the computer. Then, insert the disc into the optical drive.
   - If the storage device is an external device other than a disc, connect the storage device to the computer.
2. Restart the computer. When the logo screen is displayed, press F1 or Fn+F1.
3. Select **Startup**, and then follow the on-screen instructions to change the startup sequence.
4. Press F10 or Fn+F10 to save the changes and exit.

Select a temporary startup device

Note: Not all discs and storage drives are bootable.

1. Depending on the type of the storage device, do one of the following:
   - If the storage device is internal, go to step 2.
   - If the storage device is a disc, ensure that the computer is on or turn on the computer. Then, insert the disc into the optical drive.
   - If the storage device is an external device other than a disc, connect the storage device to the computer.
2. Restart the computer. When the logo screen is displayed, press F12 or Fn+F12.
3. Select the storage device as desired and press Enter.

If you want to change the startup device sequence permanently, select **Enter Setup** on Startup Device Menu and press Enter to enter the BIOS menu.

Change BIOS settings before installing a new operating system

BIOS settings vary by operating system. Change the BIOS settings before installing a new operating system.

To change the BIOS settings:

1. Restart the computer. When the logo screen is displayed, press F1 or Fn+F1.
2. From the main interface, select **Security → Secure Boot** and press Enter.
3. Depending on the operating system to be installed, do one of the following:
   - To install the Windows 10 (64-bit) and many Linux operating systems, select **Enabled** for **Secure Boot**.
   - To install an operating system that does not support secure boot, select **Disabled** for **Secure Boot**.
4. Press F10 or Fn+F10 to save the changes and exit.

Update UEFI BIOS

When you install a new program, device driver, or hardware component, you might need to update UEFI BIOS. You can update the BIOS from your operating system or a flash update disc (supported only on selected models).

Download and install the latest UEFI BIOS update package by one of the following methods:

- Using the built-in software update service:

  Ubuntu software update will check the LVFS site for any firmware updates and notify you when updates are available.
- From the Lenovo Support Web site:
  1. Go to https://pcsupport.lenovo.com.
  2. Download the flash BIOS update driver for the operating system version or the ISO image version (used to create a flash update disc). Then, download the installation instructions for the flash BIOS update driver you have downloaded.
  3. Print the installation instructions and follow the instructions to update the BIOS.

Chapter 6. Hardware removal and installation

This chapter provides instructions on how to remove and install hardware for your computer.

Handling static-sensitive devices

Do not open the static-protective package containing the new part until the defective part has been removed and you are ready to install the new part. Static electricity, although harmless to you, can seriously damage computer components and options.

When you handle options and other computer components, take these precautions to avoid static-electricity damage:

- Limit your movement. Movement can cause static electricity to build up around you.
- Always handle options and other computer components carefully. Handle PCI/PCIe cards, memory modules, system boards, and microprocessors by the edges. Never touch any exposed circuitry.
- Prevent others from touching the options and other computer components.
- Touch the static-protective package containing the part to a metal expansion-slot cover or other unpainted metal surface on the computer for at least two seconds. This reduces static electricity from the package and your body before you install or replace a new part.
- When possible, remove the new part from the static-protective package, and install it directly in the computer without setting the part down. When this is not possible, place the static-protective package on a smooth, level surface and place the part on the package.
- Do not place the part on the computer cover or other metal surface.

Customer Replaceable Units

Customer Replaceable Units (CRUs) are parts that can be upgraded or replaced by the customer. ThinkStation computers contain the following types of CRUs:

- **Self-service CRUs:** Refer to parts that can be installed or replaced easily by customer themselves or by trained service technicians at an additional cost.
- **Optional-service CRUs:** Refer to parts that can be installed or replaced by customers with a greater skill level. Trained service technicians can also provide service to install or replace the parts under the type of warranty designated for the customer's machine.

If you intend on installing the CRU, Lenovo will ship the CRU to you. CRU information and replacement instructions are shipped with your product and are available from Lenovo at any time upon request. You might be required to return the defective part that is replaced by the CRU. When return is required: (1) return instructions, a prepaid shipping label, and a container will be included with the replacement CRU; and (2) you might be charged for the replacement CRU if Lenovo does not receive the defective CRU within thirty (30) days of your receipt of the replacement CRU. See your Lenovo Limited Warranty documentation at https://www.lenovo.com/warranty/llw_02 for full details.

For the CRU information of your computer, refer to the following list.

Self-service CRUs

- Computer cover
- Coin-cell battery
- Cover presence switch

© Copyright Lenovo 2020

- Dust shield (available on some models)
- Flex module (available on some models)
- Flex storage enclosure (available on some models)
- Front-access storage enclosure (available on some models)
- Front bezel
- Keyboard (available on some models)
- M.2 solid-state drive (available on some models)
- Memory module (vary by computer model)
- Mouse (available on some models)
- Plastic holder (available on some models)
- Power cord
- Slim optical drive (available on some models)
- Storage drives (vary by computer model)
- Type-1 storage-drive cage (available on some models)
- Type-2 storage-drive cage (available on some models)

Optional-service CRUs

- Power supply assembly
- Heat-sink-and-fan assembly
- PCIe card (vary by computer model)

Preparing your computer

Attention: Do not open your computer or attempt any repair before reading and understanding the Appendix B “Important safety information” on page 97.

CAUTION:



Avoid contact with hot components inside the computer. During operation, some components become hot enough to burn the skin. Before you open the computer cover, turn off the computer, disconnect power, and wait approximately 10 minutes for the components to cool.

Before installing or removing any hardware component in your computer, do the following to prepare your computer:

1. Remove any media from the drives and turn off all attached devices and the computer. Then, disconnect all power cords from electrical outlets and disconnect all cables that are connected to the computer.
2. Unlock any locking device that secures the computer cover.
3. If your computer comes with a dust shield, remove the dust shield from the front bezel as shown.

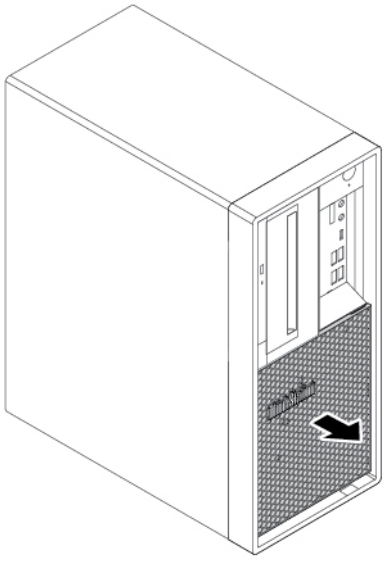

Figure 4. Removing the dust shield

4. Remove the two screws that secure the computer cover. Then, slide the cover to the rear of the computer to remove the cover.

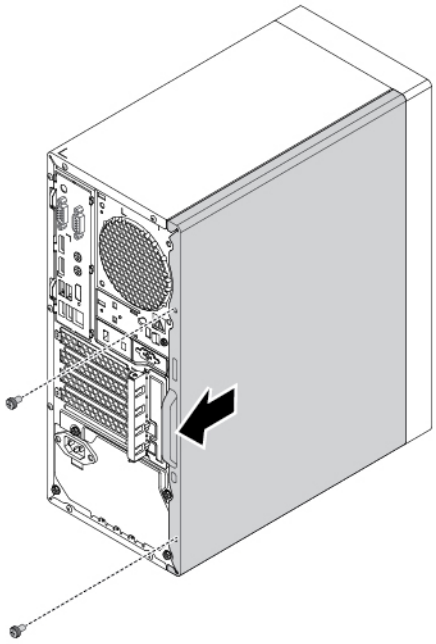

Figure 5. Removing the computer cover

5. Release the three plastic tabs of the front bezel as shown and pivot the front bezel outward to remove it from the computer.

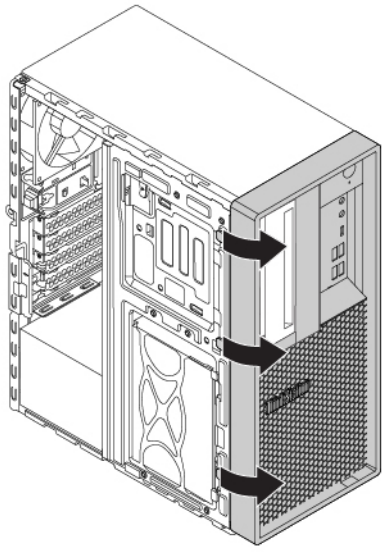

Figure 6. Removing the front bezel

6. Pivot the drive bay assembly outward.

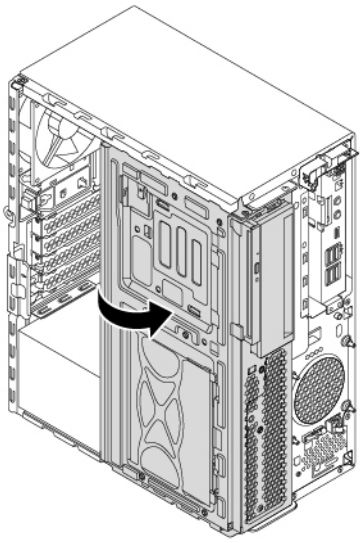

Figure 7. Pivoting the drive bay assembly outward

Notes:

- Depending on your computer model, some of the hardware parts in the removal and installation section might not be available.
- Use computer parts provided only by Lenovo.
- When removing or installing an option, use the appropriate instructions in this section along with the instructions that come with the option.

- In most areas of the world, Lenovo requires the return of the defective CRU. Information about this will come with the CRU or will come a few days after the CRU arrives.

Removing and installing hardware

This section provides instructions on how to remove and install hardware for your computer. You can expand the capabilities of your computer and maintain your computer by removing or installing hardware.

Attention: Do not open your computer or attempt any repair before reading and understanding the Appendix B “Important safety information” on page 97.

External options

You can connect external options to your computer, such as external speakers, a printer, or a scanner. For some external options, you must install additional software in addition to making the physical connection. When installing an external option, see Chapter 1 “Meet your computer” on page 1 to identify the required connector. Then, use the instructions that come with the option to help you make the connection and install any software or device drivers that are required for the option.

Slim optical drive

Attention: Do not open your computer or attempt any repair before reading and understanding the Appendix B “Important safety information” on page 97.

To remove or install a slim optical drive, do the following:

1. Prepare your computer. See “Preparing your computer” on page 22.
2. Locate the slim optical drive.
3. To remove the slim optical drive from the drive bay assembly, do the following:
   a. Disconnect cables from the rear of the slim optical drive.
   b. Press the release button, and then slide the slim optical drive out of the drive bay assembly.

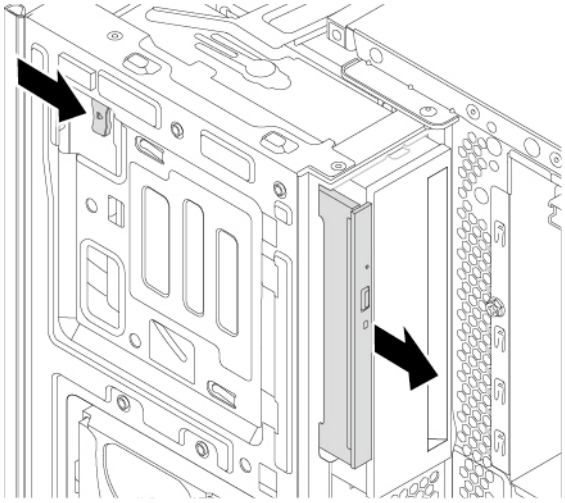

Figure 8. Removing the slim optical drive

c. Remove the bracket from the slim optical drive.

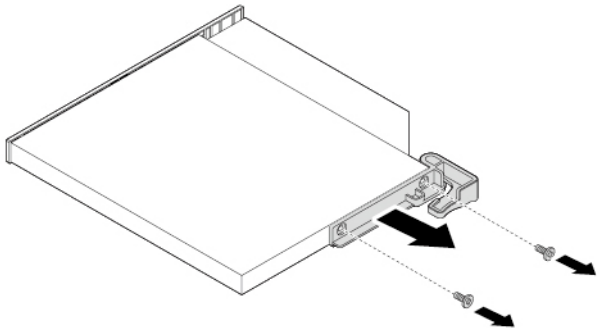

Figure 9. Removing the bracket

4. To install a new slim optical drive into the drive bay assembly, do the following:
   a. If there is a plastic shield installed in the front bezel, remove the plastic shield as shown.

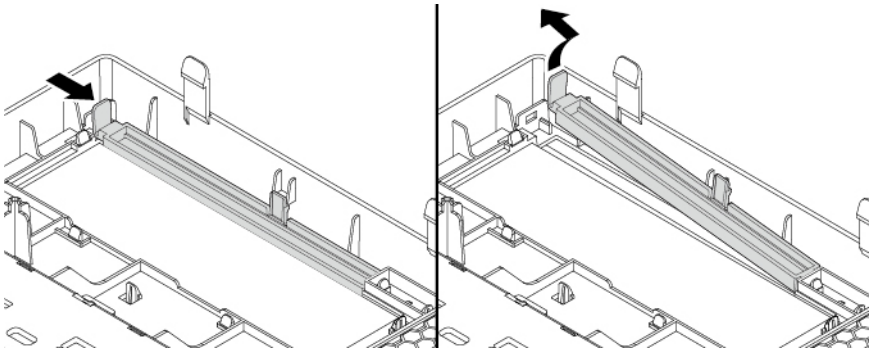

Figure 10. Removing the plastic shield

b. If there is a metal shield installed in the slim optical drive bay, remove the metal shield as shown.

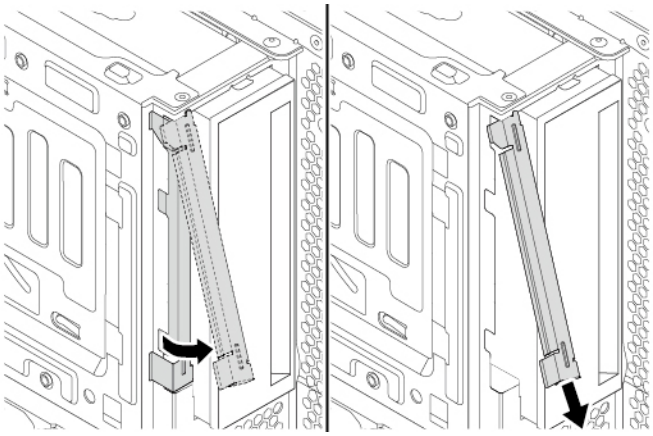

Figure 11. Removing the metal shield

c. Align the two holes in the bracket with the corresponding holes in the new slim optical drive. Then, install the bracket to the new slim optical drive.

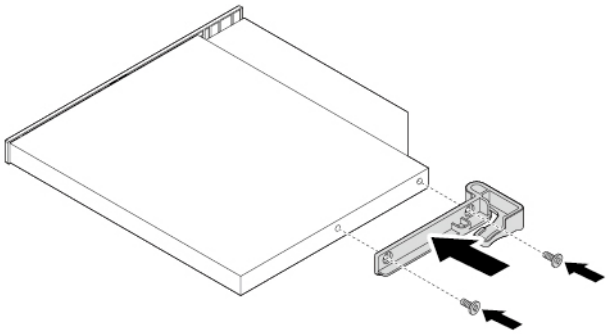

Figure 12. Installing the bracket

d. Insert the new slim optical drive into the slim optical drive bay until you hear a click. The slim optical drive is secured in place.

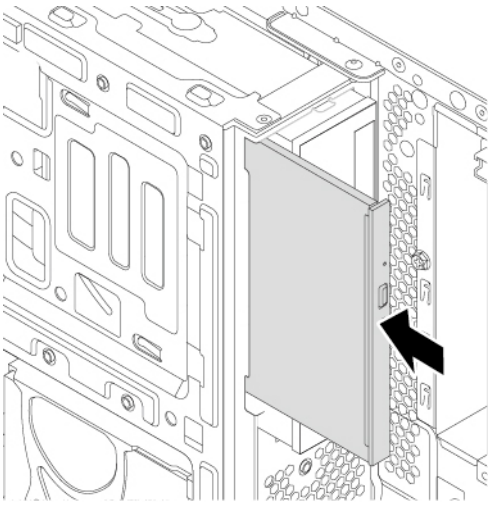

Figure 13. Installing the slim optical drive

e. Connect the cables to the rear of the new slim optical drive.

What to do next:

- To work with another piece of hardware, go to the appropriate section.
- To complete the installation or replacement, go to “Completing the parts replacement” on page 87.

PCIe card

Attention: Do not open your computer or attempt any repair before reading and understanding the Appendix B “Important safety information” on page 97.

Your computer has one PCIe x1 card slot, one PCIe x16 card slot (negotiable link width x4), and one PCIe x16 graphics card slot (graphics card available on some models).

To remove or install a PCIe card, do the following:

1. Prepare your computer. See “Preparing your computer” on page 22.
2. Locate the PCIe card slot.

3. If the PCIe card is held in place by a retaining latch, press the retaining latch a as shown to disengage the latch.

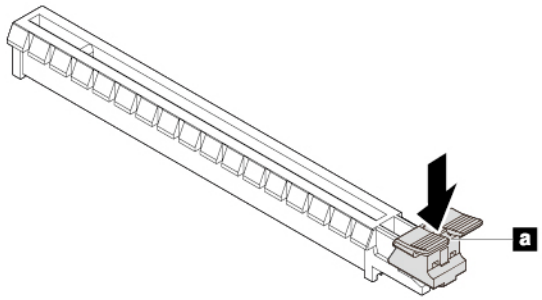

Figure 14. Disengaging the card retaining latch

4. To remove a PCIe card, do the following:
   a. Rotate the PCIe card retainer to the open position.

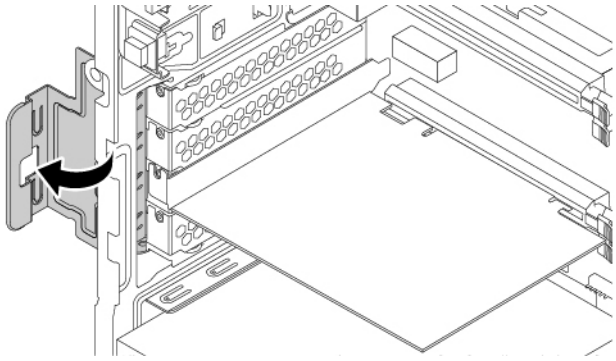

Figure 15. Rotating the PCIe card retainer

b. Grasp the old card and gently pull it out of the slot.

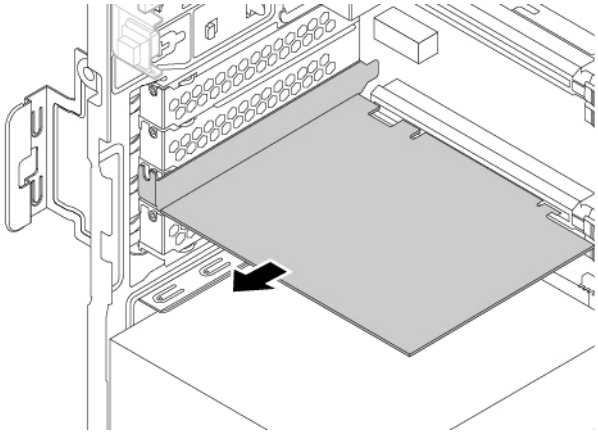

Figure 16. Removing a PCIe card

5. To install a new PCIe card, do the following:
   a. Remove the new PCIe card from its static-protective package.
   b. If necessary, remove the appropriate metal slot cover on the rear of the chassis.
   c. Install the new card into the appropriate slot on the system board.

      Note: If you are installing a PCIe x16 graphics card, ensure that the memory-slot retaining clips are closed before you install the card to avoid any interference during the installation.

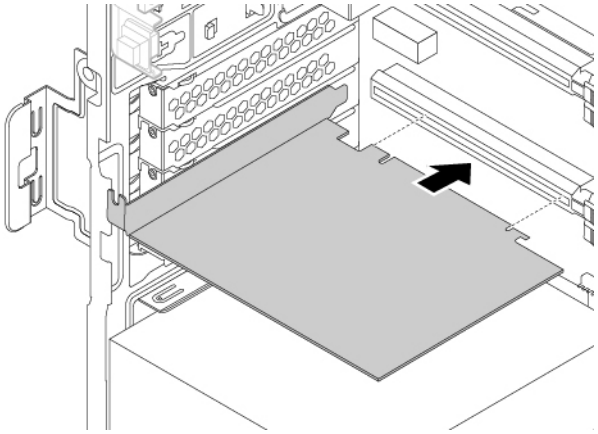

Figure 17. Installing a new PCIe card

d. Rotate the PCIe card retainer to the closed position.

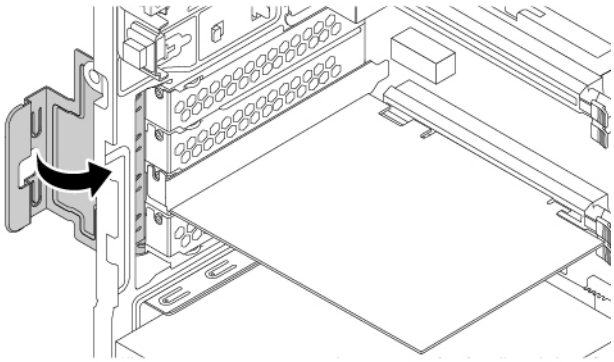

Figure 18. Rotating the PCIe card retainer

What to do next:

- To work with another piece of hardware, go to the appropriate section.
- To complete the installation or replacement, go to “Completing the parts replacement” on page 87.

Full-length PCIe card

Attention: Do not open your computer or attempt any repair before reading and understanding the Appendix B “Important safety information” on page 97.

Your computer has one PCIe x1 card slot, one PCIe x16 card slot (negotiable link width x4), and one PCIe x16 graphics card slot (graphics card available on some models).

To remove or install a full-length PCIe card, do the following:

1. Prepare your computer. See “Preparing your computer” on page 22.
2. Locate the PCIe card slot.

3. If the PCIe card is held in place by a retaining latch, press the retaining latch a as shown to disengage the latch.

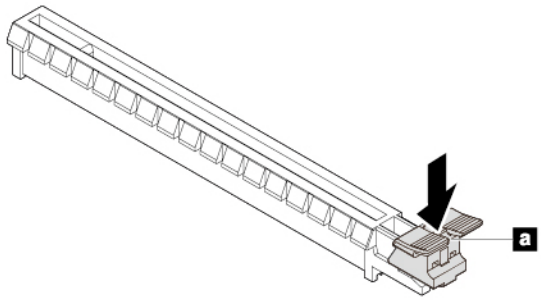

Figure 19. Disengaging the card retaining latch

4. To remove a PCIe card, do the following:
   a. Rotate the PCIe card retainer to the open position.

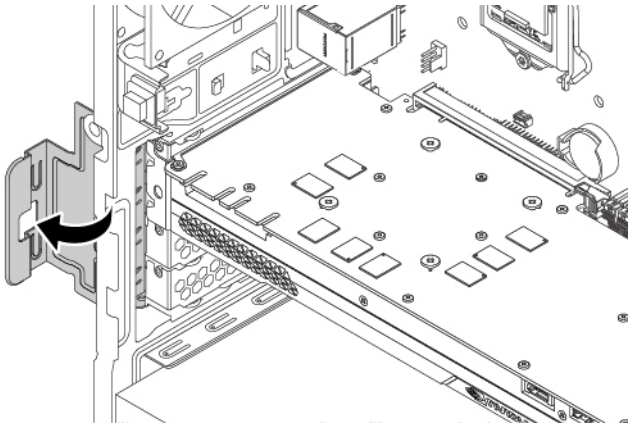

Figure 20. Rotating the PCIe card retainer

   b. Grasp the old card and gently pull it out of the slot.

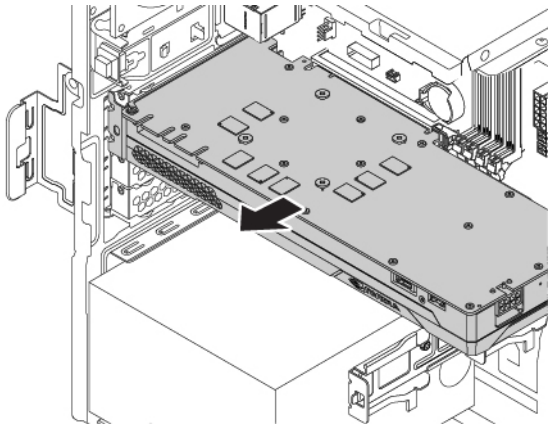

Figure 21. Removing a full-length PCIe card

5. Remove the three screws that secure the bracket to remove it from the PCIe card.

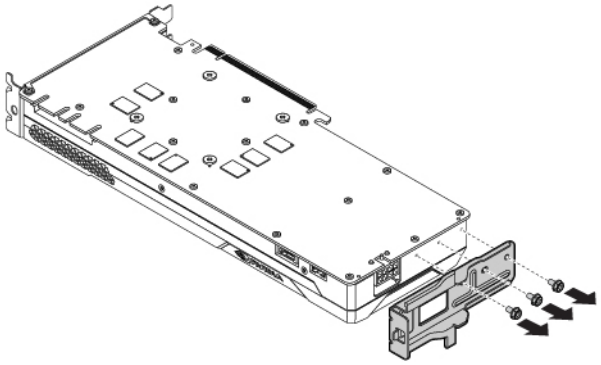

Figure 22. Removing a full-length PCIe card bracket

6. To install a new full-length PCIe card, do the following:
   a. Remove the new PCIe card from its static-protective package.
   b. If necessary, remove the appropriate metal slot cover on the rear of the chassis.
   c. Install the three screws to secure the bracket to the new full-length PCIe card.

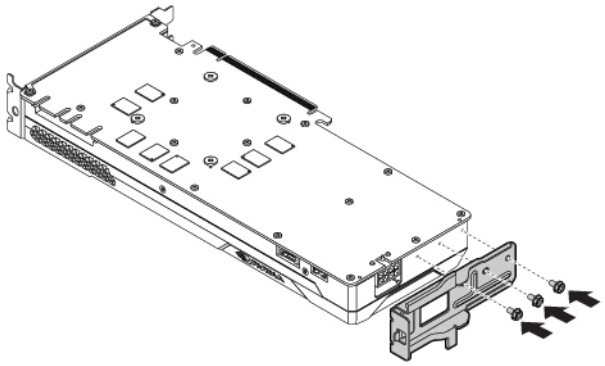

Figure 23. Installing a full-length PCIe card bracket

d. Install the new card into the appropriate slot on the system board.

Note: If you are installing a PCIe x16 graphics card, ensure that the memory-slot retaining clips are closed before you install the card to avoid any interference during the installation.

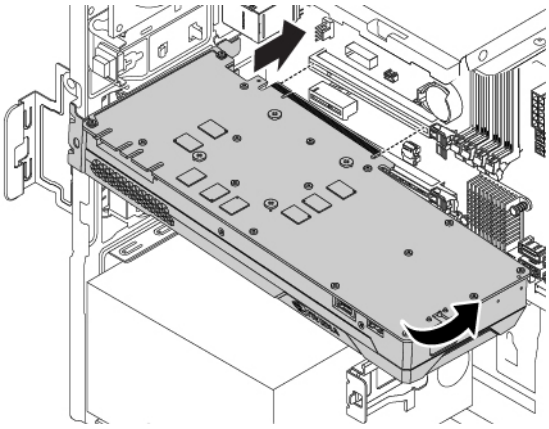

Figure 24. Installing a new full-length PCIe card

e. Rotate the PCIe card retainer to the closed position.

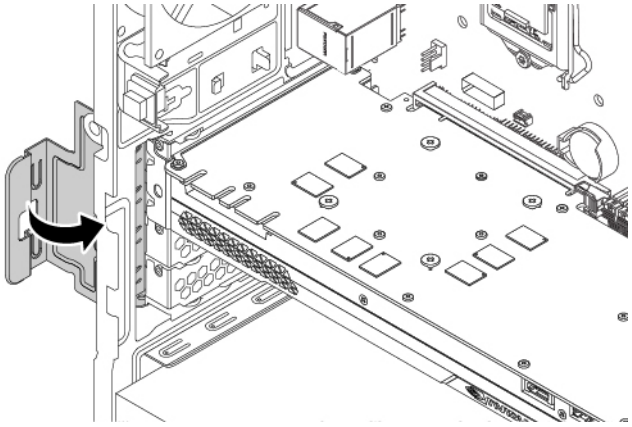

Figure 25. Rotating the PCIe card retainer

What to do next:

- To work with another piece of hardware, go to the appropriate section.
- To complete the installation or replacement, go to “Completing the parts replacement” on page 87.

M.2 solid-state drive

Attention: Do not open your computer or attempt any repair before reading and understanding the Appendix B “Important safety information” on page 97.

The instructions on how to install or replace a M.2 solid-state drive also apply to the Intel Optane memory. Before replacing the Intel Optane memory, ensure that you disable the Intel Optane memory from the Intel Rapid Storage Technology (Intel RST) Console. Otherwise, all data on the storage drive will be lost. For more information, see instructions on https://www.intel.com/content/www/us/en/support/articles/000023989/memory-and-storage/intel-optane-memory.html.

An M.2 solid-state drive can be installed on the system board or an M.2 solid-state drive PCIe adapter.

M.2 solid-state drive on the system board

To remove or install an M.2 solid-state drive on the system board, do the following:

1. Prepare your computer. See “Preparing your computer” on page 22.
2. Locate the M.2 solid-state drive slot.
3. Untie the cables that prevent your access to the M.2 solid-state drive slot from the cable clip.
4. To remove an M.2 solid-state drive, do the following:
   a. Turn the two mounting studs 90-degree counterclockwise to release the heat sink. Then, lift the heat sink off the plastic holder.

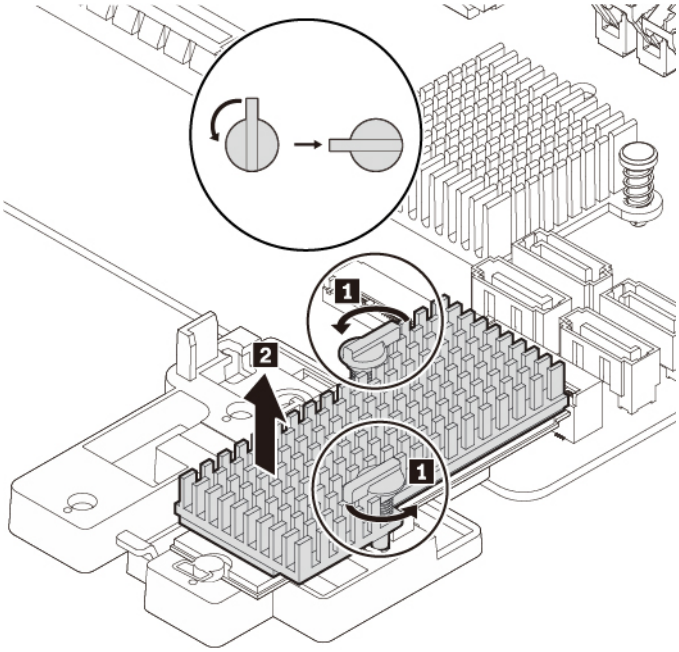

Figure 26. Removing the heat sink from the plastic holder

b. Pull the handle of the retention latch outward to the open position. The M.2 solid-state drive is released from the secured position and pivots upward. Remove the M.2 solid-state drive out of the slot.

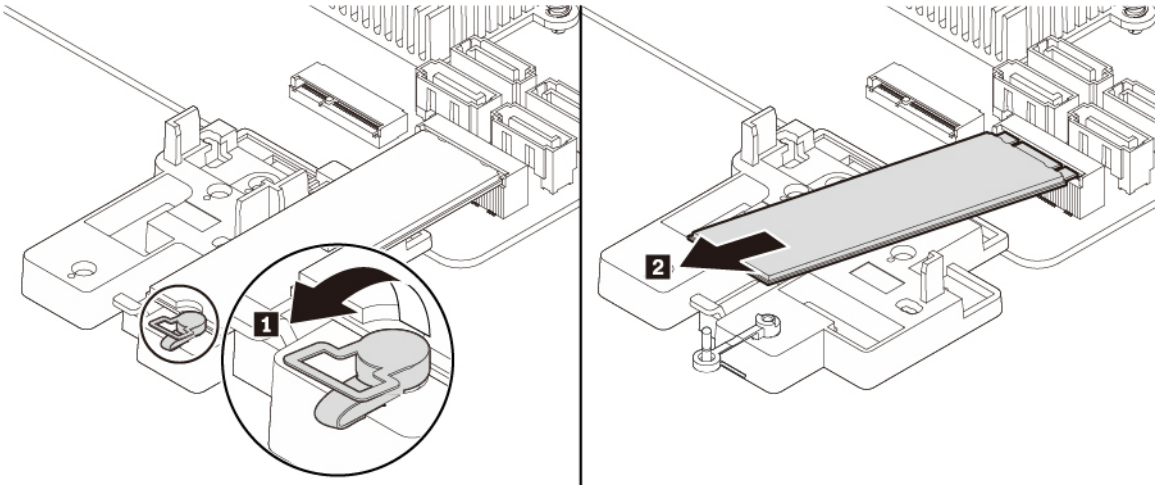

Figure 27. Opening the retention latch and removing the M.2 solid-state drive

5. To install a new M.2 solid-state drive, do the following:
   a. If necessary, align the four tabs on the rear of the plastic holder with the corresponding holes in the chassis. Then slide the plastic holder toward the system board until it snaps into position.

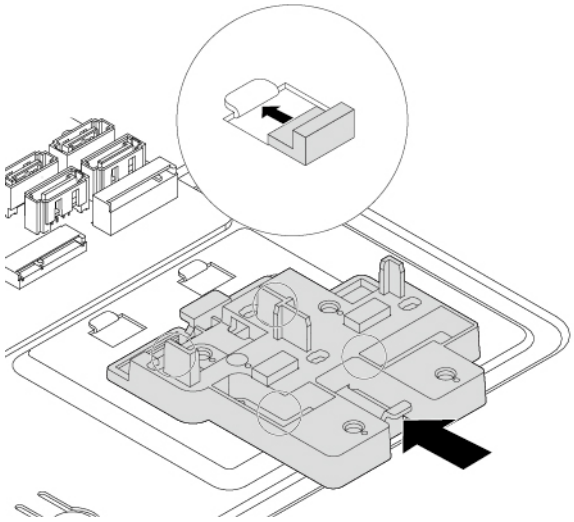

Figure 28. Installing the plastic holder

b. Locate the hole in the plastic holder to install the retention latch. Align the pin **a** with the corresponding hole **b** in the plastic holder. Then press the retention latch downward into the hole until it snaps into position.

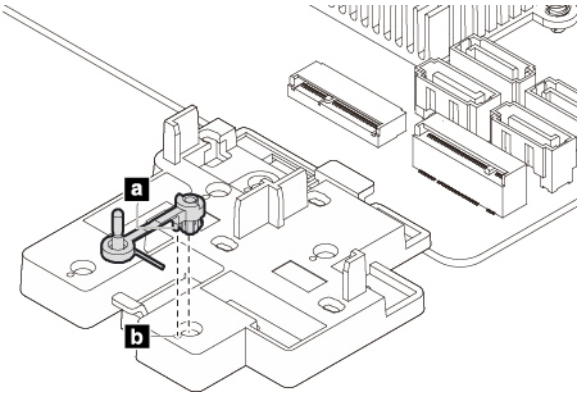

Figure 29. Installing the retention latch

c. Hold the new M.2 solid-state drive by its edges and ensure that the circuit board side is facing upward. Align the contact edge of the new drive with the key in the corresponding slot. Then carefully insert the new drive into the slot at an angle of about 20 degrees and pivot the new drive downward. Insert the plug of the retention latch into the hole to secure the new drive.

Note: Do not touch the circuit board of the M.2 solid-state drive.

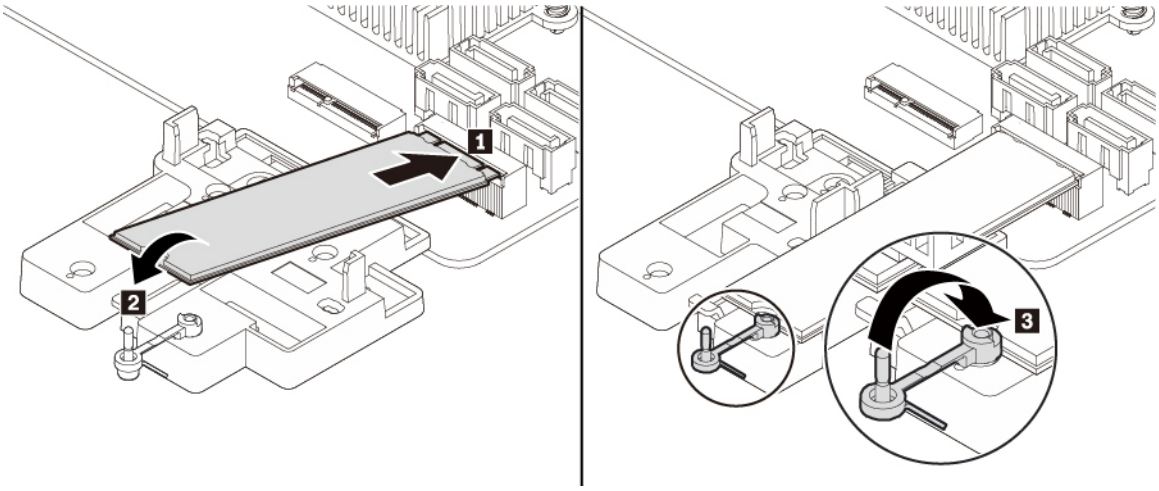

Figure 30. Installing the M.2 solid-state drive

6. If necessary, remove the film that covers the thermal pad at the bottom of the heat sink. Place the heat sink on the M.2 solid-state drive. Ensure that the two mounting studs on the heat sink are in the open position and press the studs on the heat sink into the corresponding holes in the plastic holder as shown. Then, turn the mounting studs 90-degree clockwise to secure the heat sink to the plastic holder.

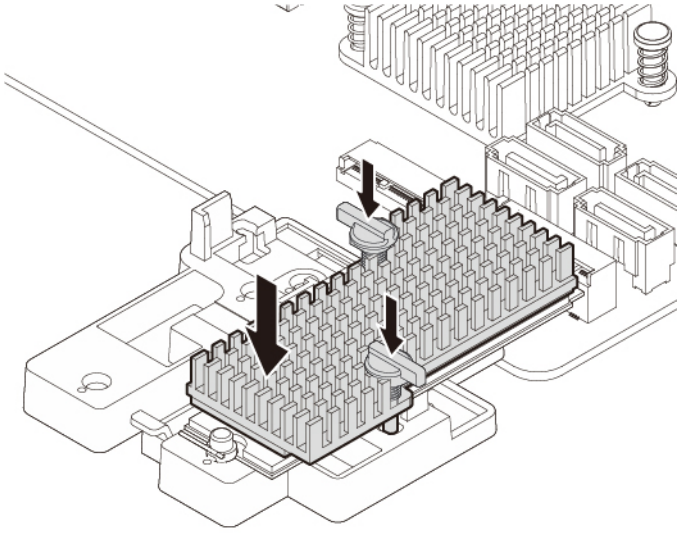

Figure 31. Installing the heat sink onto the plastic holder

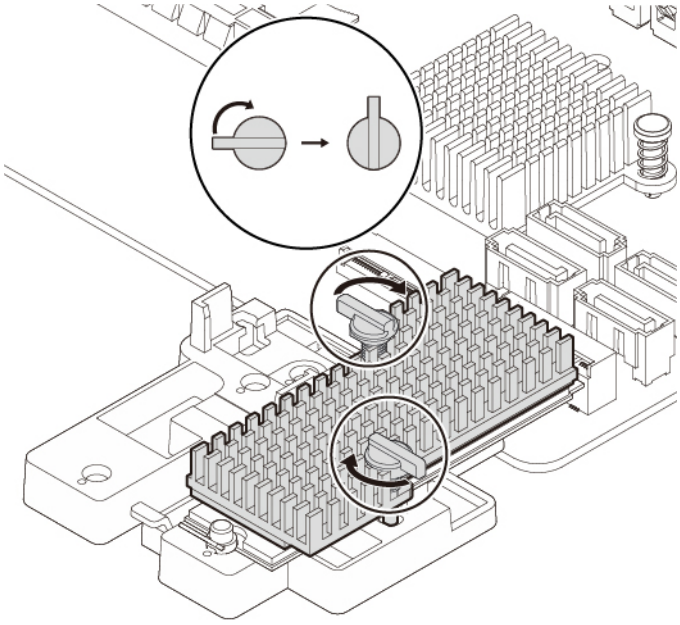

Figure 32. Securing the heat sink to the plastic holder

7. Retie the cables that you have untied with the cable clip.

What to do next:

- To work with another piece of hardware, go to the appropriate section.

- To complete the installation or replacement, go to “Completing the parts replacement” on page 87.

M.2 solid-state drive in an M.2 solid-state drive PCIe adapter

To remove or install the M.2 solid-state drive in the M.2 solid-state drive PCIe adapter, do the following:

1. Prepare your computer. See “Preparing your computer” on page 22.
2. To remove the M.2 solid-state drive in the M.2 solid-state drive PCIe adapter, do the following:
   a. Locate and remove the M.2 solid-state drive adapter from the PCIe card slot.
   b. The heat sink is secured by two mounting studs. Pinch the clips of the studs inward 1 and push the studs upward 2 to release the heat sink. Then, lift the heat sink off the M.2 solid-state drive adapter 3.

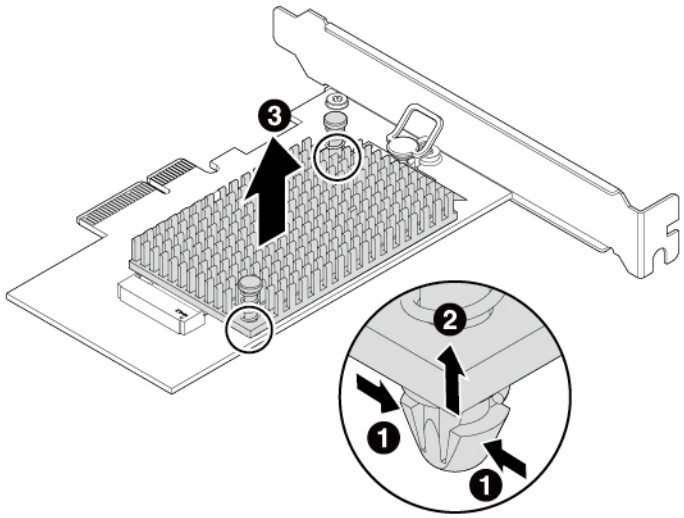

Figure 33. Removing the heat sink from the M.2 solid-state drive adapter

   c. The M.2 solid-state drive is secured by a retention latch. Pull the handle of the retention latch outward to release the M.2 solid-state drive. Then, gently pull the M.2 solid-state drive out of the M.2 slot.

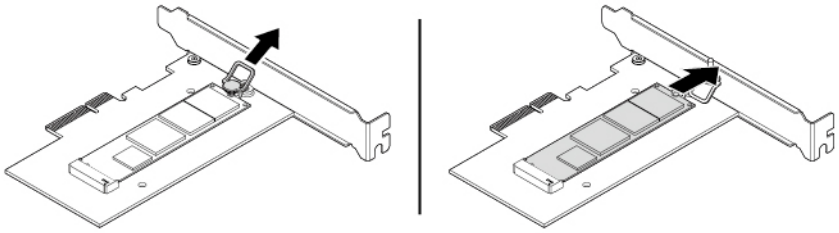

Figure 34. Removing the M.2 solid-state drive

3. To install the M.2 solid-state drive, do the following:

a. Ensure that a thermal pad is placed in position on the M.2 solid-state drive adapter.

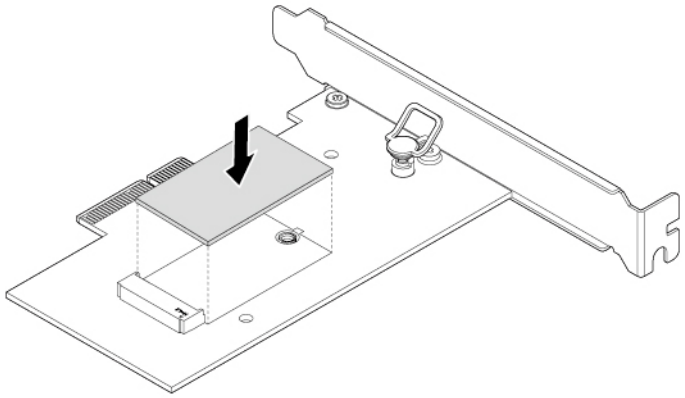

Figure 35. Installing the thermal pad

b. Pull outward the handle of the retention latch in the M.2 solid-state drive adapter.
c. Insert the new M.2 solid-state drive into the M.2 slot. Then, insert the plug of the retention latch into the hole to secure the new drive.

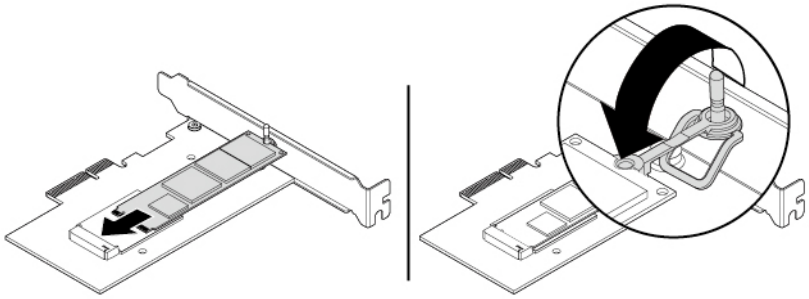

Figure 36. Installing the M.2 solid-state drive

d. Position the heat sink on the M.2 solid-state drive adapter. Ensure that the two mounting studs in the heat sink are aligned with the holes in the M.2 solid-state drive adapter. Then, push the mounting studs downward to secure the heat sink to the adapter.

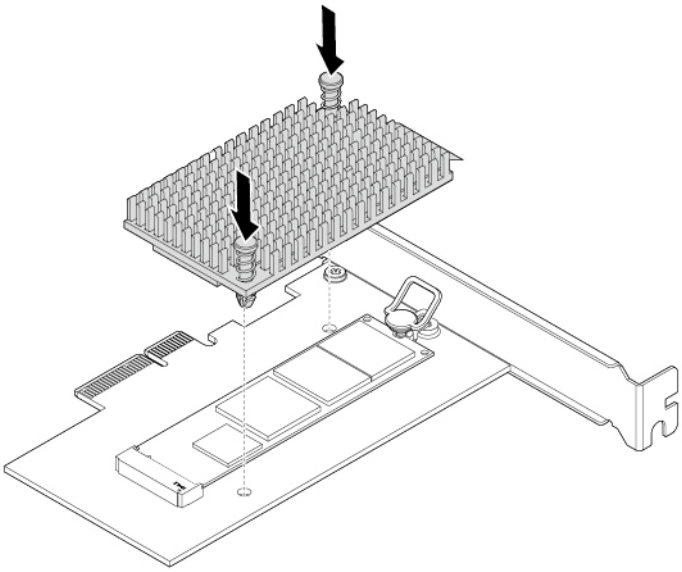

Figure 37. Installing the heat sink

e. Install the M.2 solid-state drive adapter into the appropriate PCIe card slot on the system board. See “PCIe card” on page 28.

Note: It is recommended that you install the M.2 solid-state drive adapter into the PCIe x16 card slot.

What to do next:

- To work with another piece of hardware, go to the appropriate section.
- To complete the installation or replacement, go to “Completing the parts replacement” on page 87.

Memory module

Attention: Do not open your computer or attempt any repair before reading and understanding the Appendix B “Important safety information” on page 97.

Your computer has four memory slots for installing or replacing DDR4 DIMMs. When installing or replacing a memory module, use the following guidelines:

- Use any of DDR4 ECC UDIMMs or DDR4 non-ECC UDIMMs for your computer. Do not install ECC and non-ECC UDIMMs into the same computer.
- Use 4 GB, 8 GB, 16 GB, or 32 GB non-ECC UDIMMs in any combination up to a maximum of 128 GB.
- Use 8 GB or 16 GB ECC UDIMMs in any combination up to a maximum of 64 GB.

Install memory modules in the alphabetic order as shown.

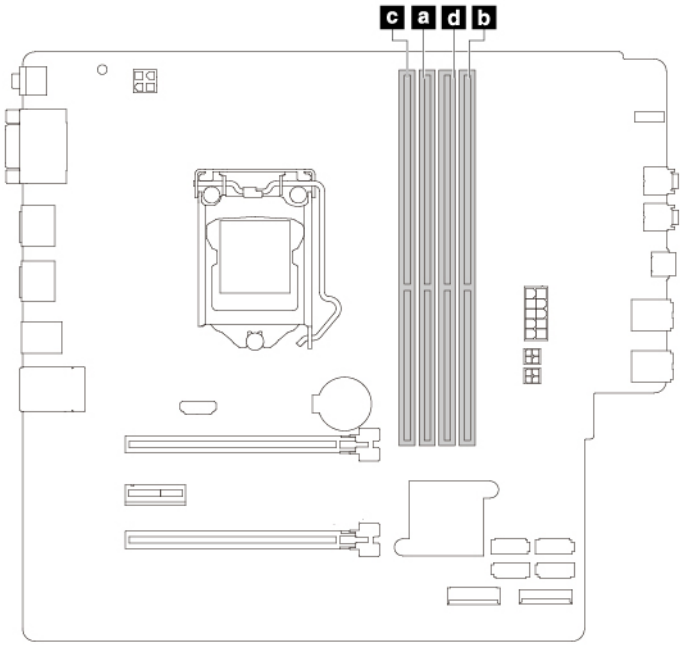

Figure 38. Memory module installation sequence

To install or replace a memory module, do the following:

1. Prepare your computer. See “Preparing your computer” on page 22.
2. Lay the computer on its side for easier access to the system board.
3. Locate the memory slots.
4. Remove any PCIe cards that might prevent your access to the coin-cell battery. See “PCIe card” on page 28.
5. To remove a memory module, open the retaining clips and gently pull the memory module out of the memory slot.

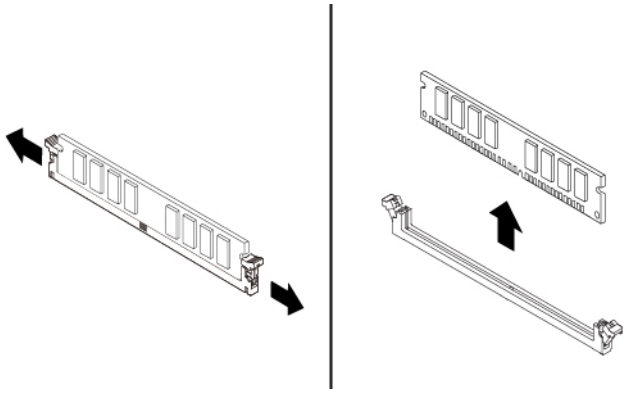

Figure 39. Removing a memory module

6. To install a memory module, do the following:

a. Open the retaining clips of the memory slot.

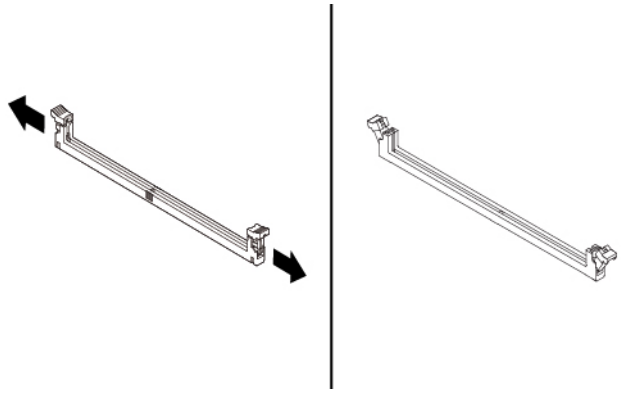

Figure 40. Opening the retaining clips

b. Position the new memory module over the memory slot. Ensure that the notch 1 on the memory module is aligned with the key 2 in the slot. Push the memory module straight down into the slot until the retaining clips completely close.

Note: Do not touch the circuit board of the memory module.

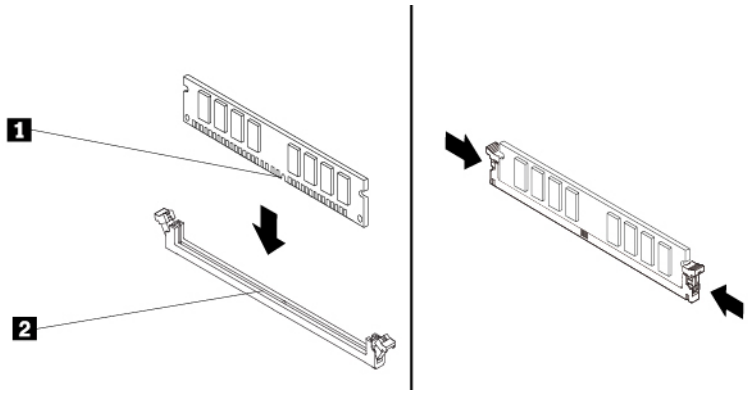

Figure 41. Installing a memory module

7. Reinstall any PCIe cards if you have removed them.

What to do next:

- To work with another piece of hardware, go to the appropriate section.
- To complete the installation or replacement, go to “Completing the parts replacement” on page 87.

Device in the flex bay

Attention: Do not open your computer or attempt any repair before reading and understanding the Appendix B “Important safety information” on page 97.

Some computer models come with a flex bay. Depending on your computer model, one of the following devices might be installed in the flex bay:

- Flex module
- Flex storage enclosure

- Front-access storage enclosure

Note: The following instructions on how to remove or install an flex storage enclosure also apply to other supported devices in the flex bay.

To remove or install an flex storage enclosure, do the following:

1. Prepare your computer. See “Preparing your computer” on page 22.
2. Locate the flex bay.
3. To remove the flex storage enclosure, do the following:
   a. Disconnect the signal cable and the power cable from the rear of the flex storage enclosure.

      Note: If you are removing other supported devices from the flex bay, disconnect any additional cables first.

   b. Press the tab downward as shown and push the rear of the flex storage enclosure simultaneously to slide it out of the computer.

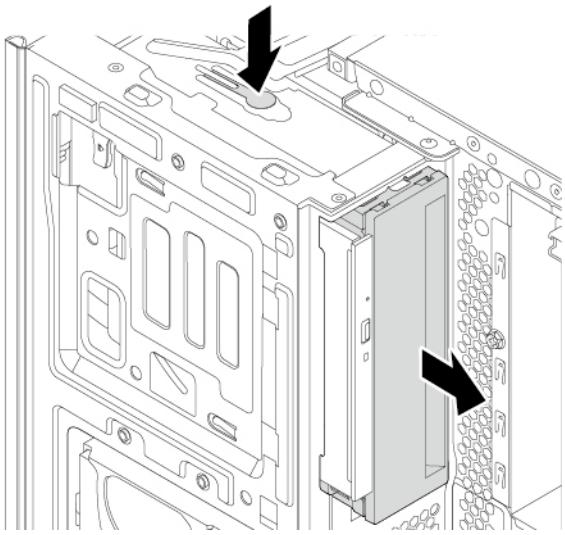

Figure 42. Removing the flex storage enclosure

c. Remove the retainer from the flex storage enclosure as shown.

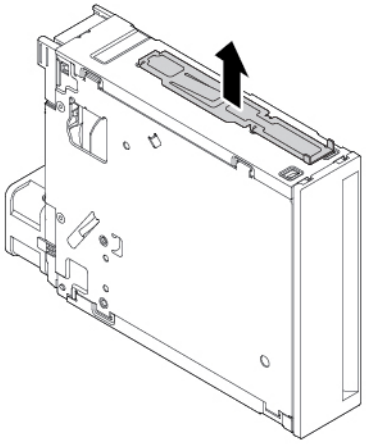

Figure 43. Removing the retainer

4. To install a flex storage enclosure, do the following:
   a. Install the retainer shipped with the new flex storage enclosure onto the new flex storage enclosure as shown.

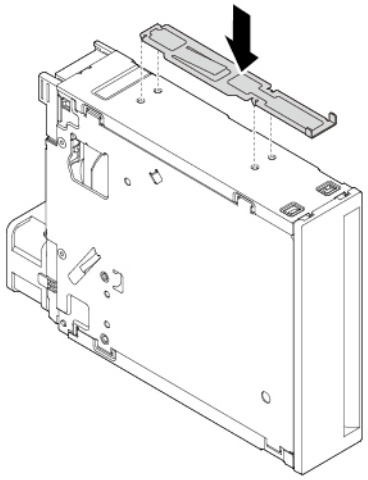

Figure 44. Installing the retainer

b. Note the orientation of the new flex storage enclosure. Then, slide the flex storage enclosure into the flex bay from the front of the chassis until it snaps into position.

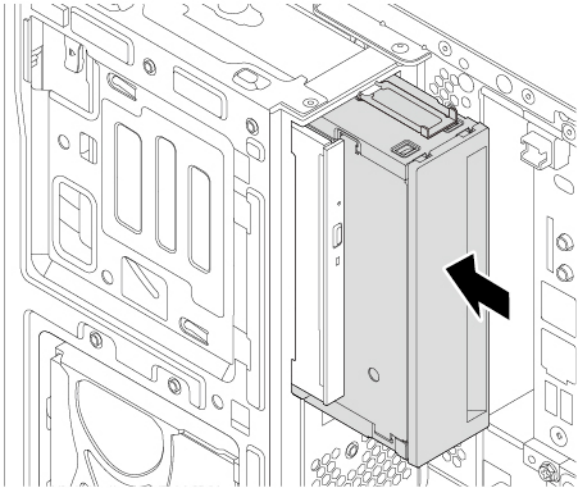

Figure 45. Installing the new flex storage enclosure

c. Connect the signal cable and the power cable to the new flex storage enclosure.

   Note: Reconnect any cables removed from other supported devices.

What to do next:

- To work with another piece of hardware, go to the appropriate section.
- To complete the installation or replacement, go to “Completing the parts replacement” on page 87.

Storage drive in the front-access storage enclosure

Attention: Do not open your computer or attempt any repair before reading and understanding the Appendix B “Important safety information” on page 97.

You can install or replace a storage drive in the front-access storage enclosure. The storage drive also can be hot-swappable, which means that you can install or replace the drive without even turning off your computer. Therefore, lock the enclosure cover to prevent the unexpected removal. The keys are attached at the rear of the computer. Store the keys in a secure place.

The storage drive in the front-access storage enclosure is hot-swappable only when the following requirements are met:

- The eSATA mode of the SATA 4 connector is enabled.
- The SATA cable of the front-access storage enclosure is connected to the SATA 4 connector on the system board. To verify the cable connection, see “Preparing your computer” on page 22 for more information.
- The operating system of your computer does not reside on the storage drive installed in the front-access storage enclosure.

Attention: If any of the above requirements are not met, do not install or replace the storage drive when the computer is turned on. Otherwise, data on the storage drive might get damaged.

3.5-inch storage drive

To remove or install a 3.5-inch storage drive, do the following:

1. Before removing an old 3.5-inch storage drive, safely eject the old storage drive from the operating system first. For more information, see the Windows help system.
2. Unlock the enclosure cover with the provided key as shown. Press the notch a to open the enclosure cover.

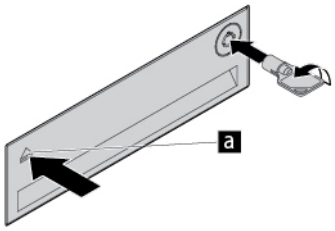

Figure 46. Opening the front-access storage enclosure cover

3. Press the pit on the bracket cover, and then grasp the tilted cover to pull the bracket out of the front-access storage enclosure.

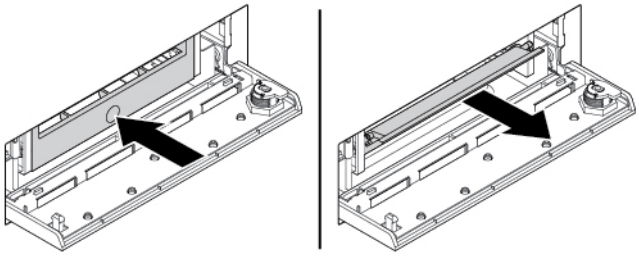

Figure 47. Removing the bracket from the front-access storage enclosure

4. Flex both sides of the bracket to remove the 3.5-inch storage drive from the bracket.

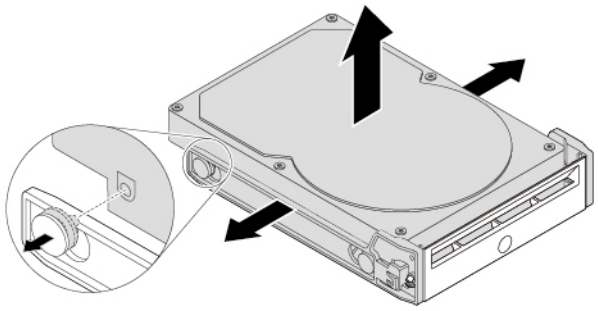

Figure 48. Removing the 3.5-inch storage drive from the bracket

5. To install a new 3.5-inch storage drive into the front-access storage enclosure, do the following:

a. Flex both sides of the bracket and align pins 1 on the bracket with the corresponding holes in the new 3.5-inch storage drive.

Notes:

- Ensure that the circuit board faces downward and the connectors face toward the rear of the bracket.
- Do not touch the circuit board on the storage drive.

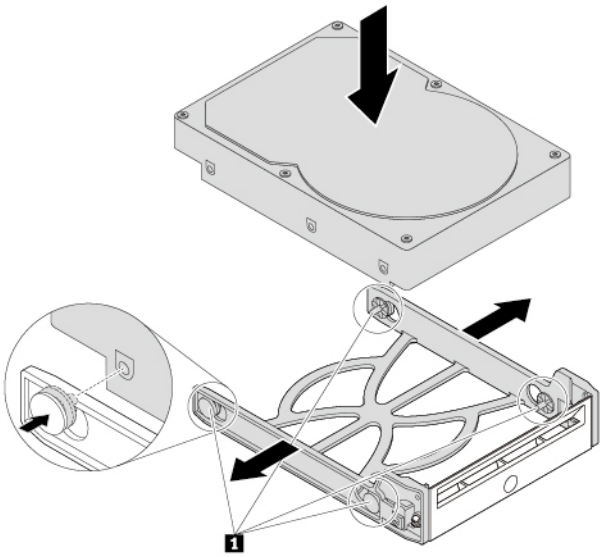

Figure 49. Installing the 3.5-inch storage drive into the bracket

b. Slide the bracket with the new 3.5-inch storage drive into the front-access storage enclosure until it snaps into position.

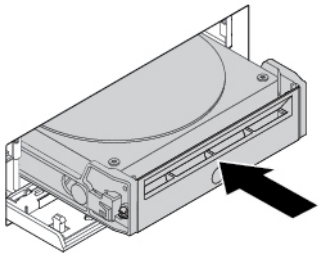

Figure 50. Installing the 3.5-inch storage drive into the front-access storage enclosure

c. Press the notch to secure the enclosure cover and lock the enclosure cover with the key.

What to do next:

- To work with another piece of hardware, go to the appropriate section.
- To complete the installation or replacement, go to “Completing the parts replacement” on page 87.

2.5-inch storage drive

To remove or install a 2.5-inch storage drive, do the following:

1. Before removing an old 2.5-inch storage drive, safely eject the old storage drive from the operating system first. For more information, see the Windows help system.
2. Unlock the enclosure cover with the provided key as shown. Press the notch a to open the enclosure cover.

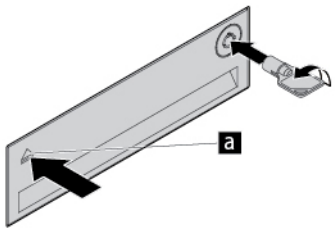

Figure 51. Opening the front-access storage enclosure cover

3. Press the pit on the bracket cover, and then grasp the tilted cover to pull the bracket out of the front-access storage enclosure.

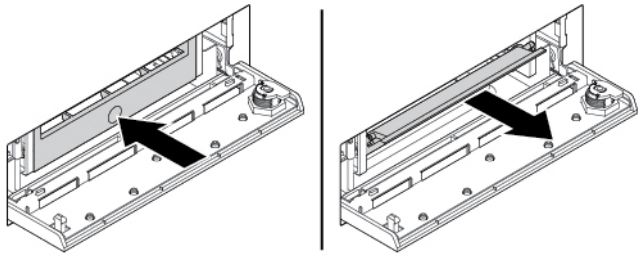

Figure 52. Removing the bracket from the front-access storage enclosure

4. To remove the 2.5-inch storage drive, do the following:
   a. Flex both sides of the bracket to remove the 2.5-inch storage drive from the bracket.

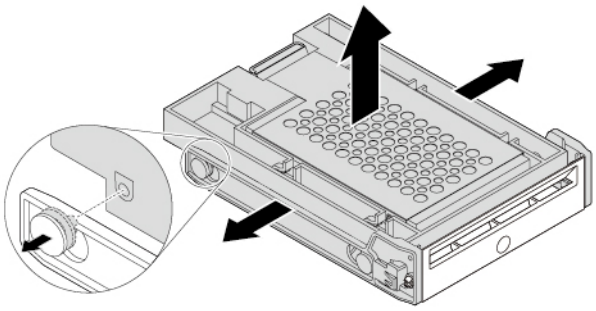

Figure 53. Removing the 2.5-inch storage drive from the bracket

b. Pivot the tab 1 of the metal adapter upward. Then, push the adapter as shown until the four tabs on the adapter slide into the notches 2. Pivot the adapter as shown to remove it with the storage drive from the converter.

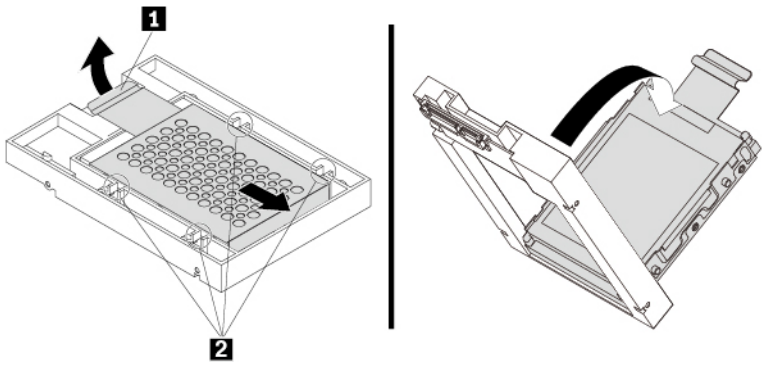

Figure 54. Removing the adapter from the converter

c. Flex both sides of the adapter to release the four pins 1 from the storage drive. Then, remove the storage drive from the adapter.

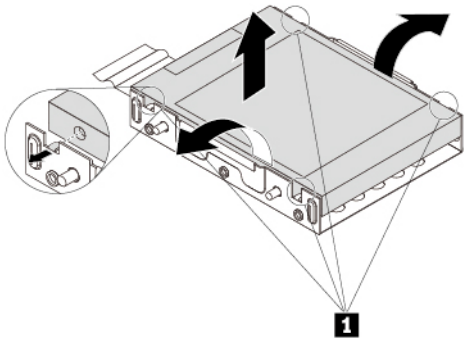

Figure 55. Removing the storage drive from the adapter

5. To install a new 2.5-inch storage drive, do the following:

a. Note the orientation of the connector on the new storage drive. Then, flex both sides of the adapter and align the four pins 1 with the corresponding holes in the storage drive.

   Note: Do not touch the circuit board (if accessible) of the 2.5-inch storage drive.

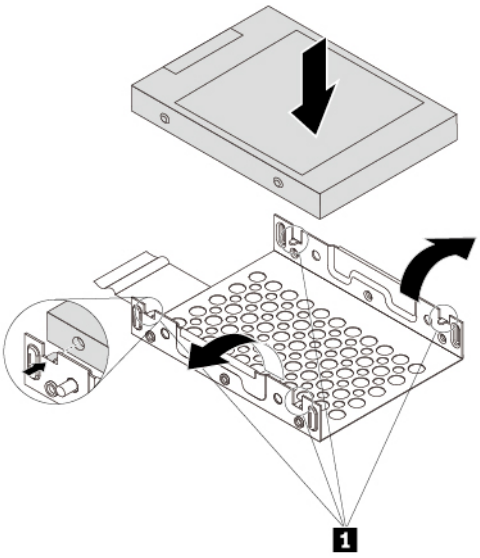

Figure 56. Installing the storage drive into the adapter

b. Align the four tabs on the adapter with the corresponding notches 1 in the converter. Then, slide the storage drive as shown until the tab 2 snaps into position. The adapter with the storage drive is installed into the converter.

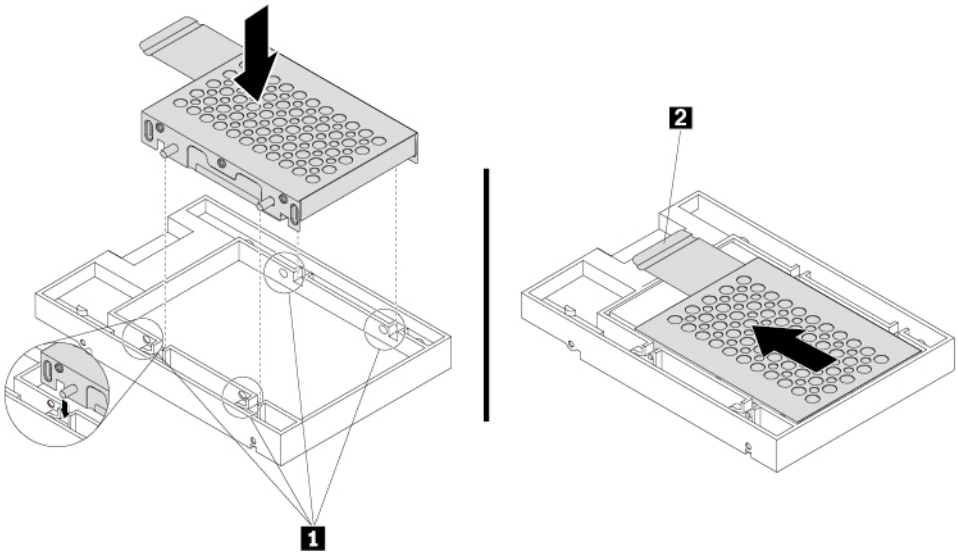

Figure 57. Installing the adapter into the converter

c. Flex both sides of the plastic bracket and align pins 1 on the plastic bracket with the corresponding holes in the plastic frame of the converter.

Notes:

- Ensure that the circuit board faces downward and the connectors face toward the rear of the bracket.
- Do not touch the circuit board on the storage drive.

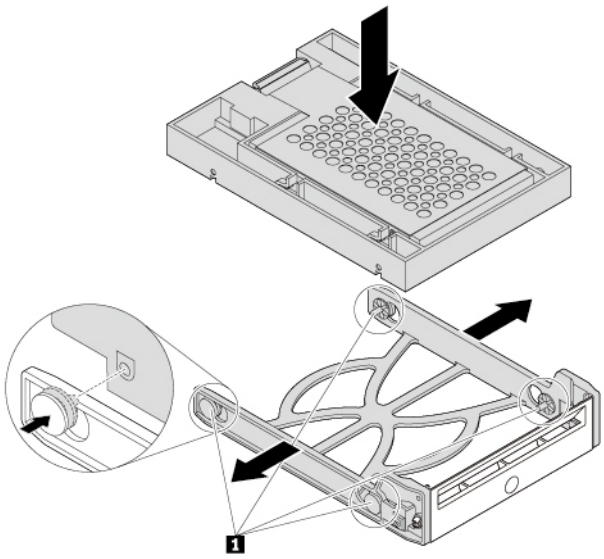

Figure 58. Installing the converter with the 2.5-inch storage drive into the plastic bracket

d. Slide the plastic bracket with the new 2.5-inch storage drive into the front-access storage enclosure until it snaps into position.

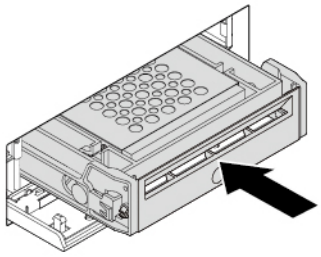

Figure 59. Installing the plastic bracket with the 2.5-inch storage drive into the front-access storage enclosure

e. Press the notch to secure the enclosure cover and lock the enclosure cover with the key.

What to do next:

- To work with another piece of hardware, go to the appropriate section.
- To complete the installation or replacement, go to “Completing the parts replacement” on page 87.

Device in the flex storage enclosure

Attention: Do not open your computer or attempt any repair before reading and understanding the Appendix B “Important safety information” on page 97.

A flex storage enclosure might be equipped with one of the following components:

- 3.5-inch storage drive
- 2.5-inch storage drive

3.5-inch storage drive

To remove or install a 3.5-inch storage drive in the flex storage enclosure, do the following:

1. Prepare your computer. See “Preparing your computer” on page 22.
2. Locate the flex bay. See “Internal storage drives” on page 5.
3. Slide the enclosure out of the chassis. See “Device in the flex bay” on page 43.
4. Pinch the two clips toward each other as shown to open the rear cover of the enclosure.

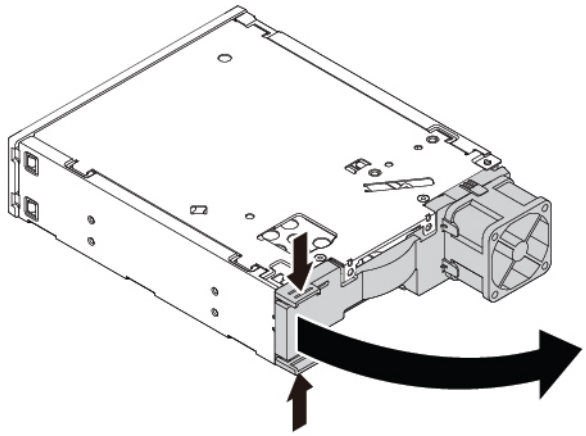

Figure 60. Opening the enclosure from the rear

5. To remove a 3.5-inch storage drive, do the following:
   a. Slide the 3.5-inch storage drive out of the rear of the enclosure.

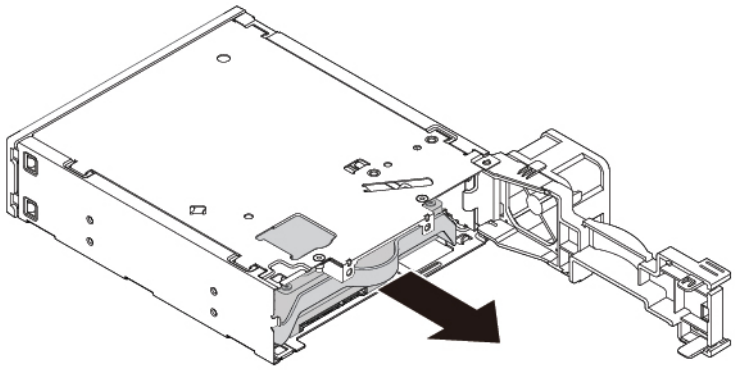

Figure 61. Removing the 3.5-inch storage drive from the rear

   b. Flex two sides of the bracket to remove the 3.5-inch storage drive from the 3.5-inch storage-drive bracket.
6. To install a new 3.5-inch storage drive into the bracket:

a. Slide the 3.5-inch storage-drive bracket out of the rear of the enclosure.

b. Flex the bracket and align pin 1, pin 2, pin 3, and pin 4 on the bracket with the corresponding holes in the 3.5-inch storage drive. Do not touch the circuit board 5 on the 3.5-inch storage drive.

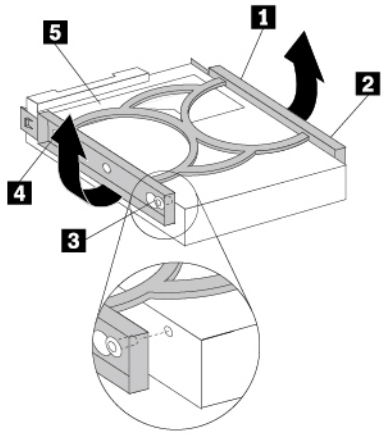

Figure 62. Installing the 3.5-inch storage drive into the bracket

c. Slide the new 3.5-inch storage drive into the enclosure from the rear until the drive snaps into position.

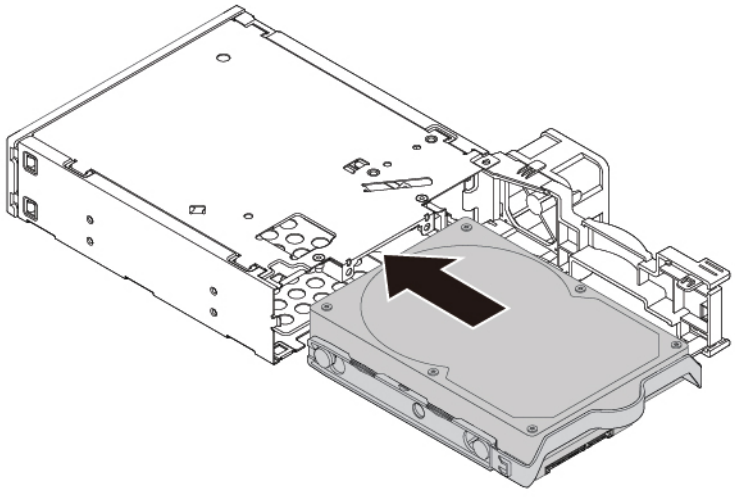

Figure 63. Installing the 3.5-inch storage drive into the enclosure

7. Pivot the rear cover of the enclosure inward until you hear a click. The rear cover is secured in place.

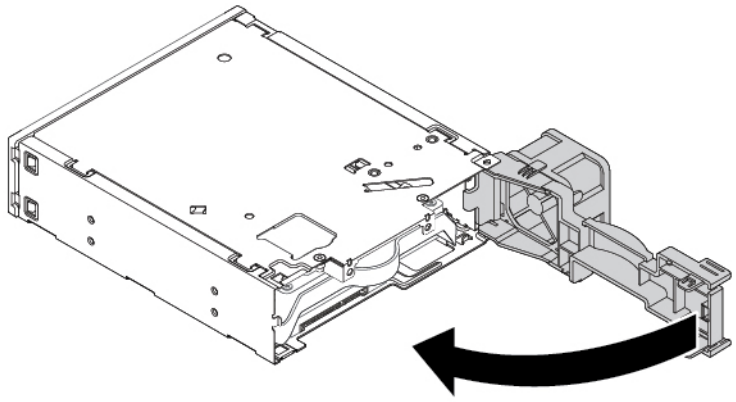

Figure 64. Pivoting the rear cover inward

8. Connect the signal cable and the power cable to the storage drive.

What to do next:

- To work with another piece of hardware, go to the appropriate section.
- To complete the installation or replacement, go to “Completing the parts replacement” on page 87.

2.5-inch storage drive

To remove or install a 2.5-inch storage drive with a 2.5-inch to 3.5-inch storage-drive converter (hereafter referred to as storage-drive converter), do the following:

1. Prepare your computer. See “Preparing your computer” on page 22.
2. Locate the flex bay. See “Internal storage drives” on page 5.
3. Slide the enclosure out of the chassis. See “Device in the flex bay” on page 43.
4. Pinch the two clips toward each other as shown to open the rear cover of the enclosure.

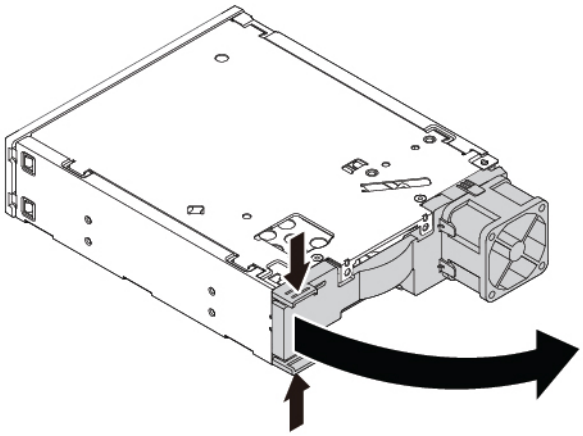

Figure 65. Opening the enclosure from the rear

5. To remove a 2.5-inch storage drive, do the following:
   a. Slide the 2.5-inch storage drive out of the rear of the enclosure.

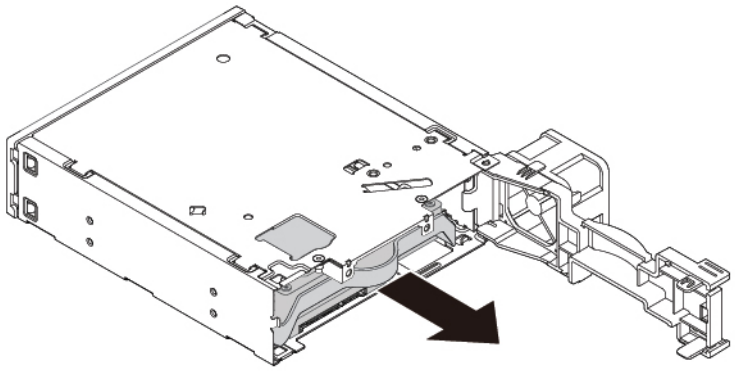

Figure 66. Removing the 2.5-inch storage drive from the rear

   b. Flex the sides of the bracket to remove the storage-drive converter from the 3.5-inch storage-drive bracket.

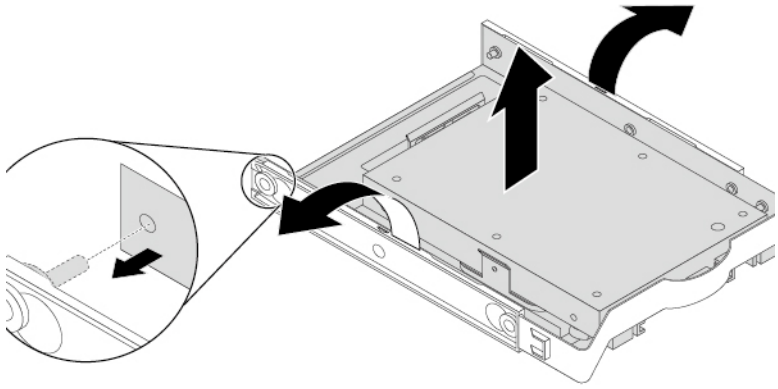

Figure 67. Removing the storage-drive converter from the 3.5-inch storage-drive bracket

   c. Remove the four screws that secure the 2.5-inch storage drive. Then lift the storage drive out of the storage-drive converter.

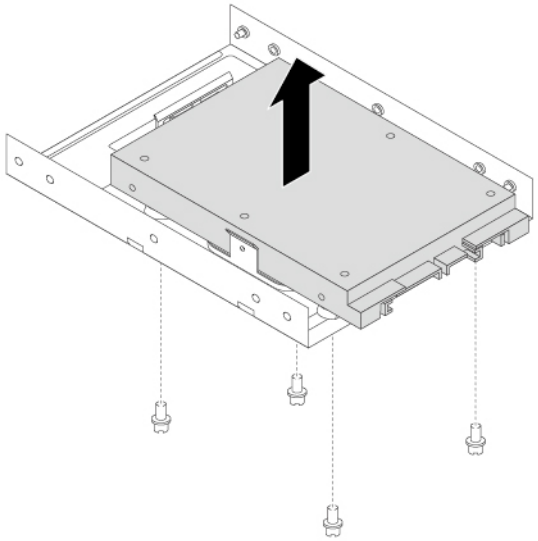

Figure 68. Removing the 2.5-inch storage drive from the storage-drive converter

6. To install a new 2.5-inch storage drive, do the following:
   a. Slide the 3.5-inch storage-drive bracket out of the rear of the enclosure.
   b. Flex the sides of the bracket to remove the storage-drive converter from the bracket.

c. Install a new 2.5-inch storage drive into the storage-drive converter. Then install the four screws to secure the new storage drive to the storage-drive converter.

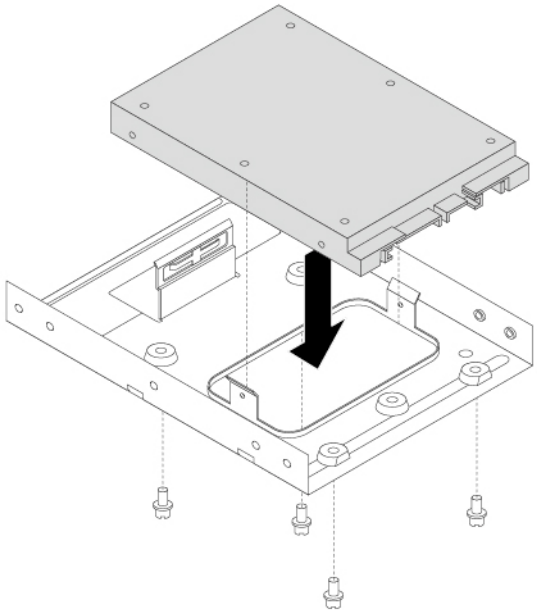

Figure 69. Installing the new solid-state drive into the storage converter

d. To install the storage-drive converter into the 3.5-inch storage-drive bracket, flex the bracket and align pin 1, pin 2, pin 3, and pin 4 on the bracket with the corresponding holes in the storage converter.

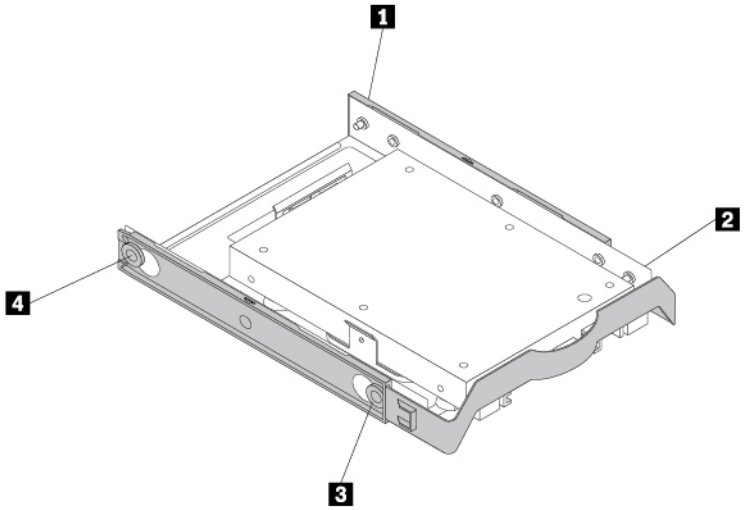

Figure 70. Installing the storage converter together with the solid-state drive into the storage drive bracket

e. Install the storage converter with the bracket into the enclosure from the rear until the drive snaps into position.

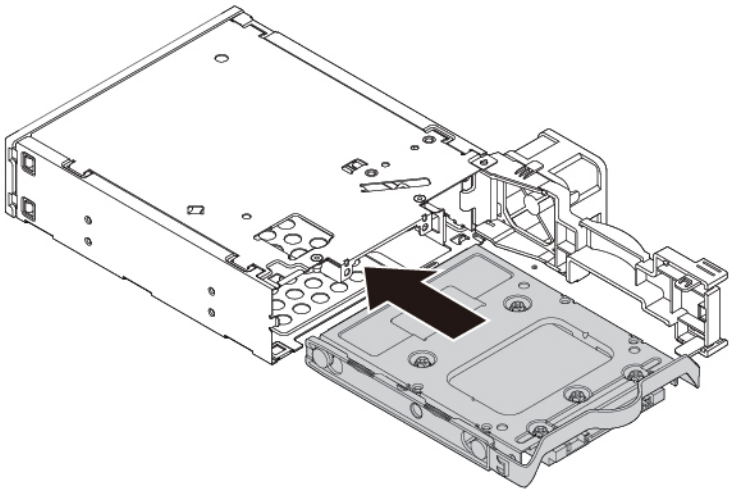

Figure 71. Installing the storage converter with the bracket into the enclosure

7. Pivot the rear cover of the enclosure inward until you hear a click. The rear cover is secured in place.

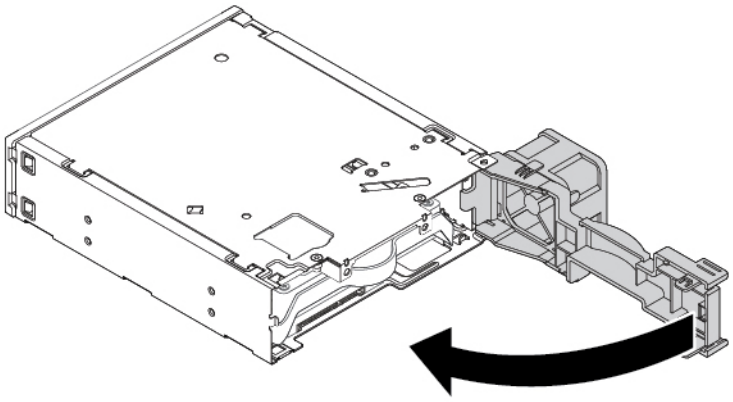

Figure 72. Pivoting the rear cover inward

8. Connect the signal cable and the power cable to the storage drive.

What to do next:

- To work with another piece of hardware, go to the appropriate section.
- To complete the installation or replacement, go to “Completing the parts replacement” on page 87.

Coin-cell battery

Attention: Do not open your computer or attempt any repair before reading and understanding the Appendix B “Important safety information” on page 97.

Your computer has a special type of memory that maintains the date, time, and settings for built-in features, such as parallel-connector assignments (configuration). A battery keeps this information active when you turn off the computer.

The battery normally requires no charging or maintenance throughout its life; however, no battery lasts forever. If the battery fails, the date and time information is lost.

Refer to the “Lithium coin cell battery notice” in the *Safety and Warranty Guide* for information about replacing and disposing of the battery.

To replace the coin-cell battery, do the following:

1. Prepare your computer. See “Preparing your computer” on page 22.
2. Locate the battery.
3. Remove any parts that might impede your access to the battery. Depending on your computer model, you might need to remove the PCI card for easier access to the battery. See “PCIe card” on page 28 or “Full-length PCIe card” on page 31.
4. Remove the old battery.

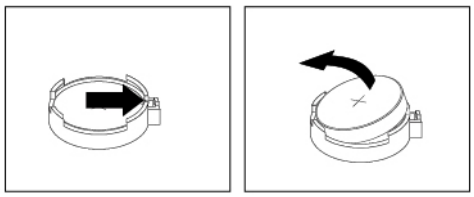

Figure 73. Removing the battery

5. Install a new battery.

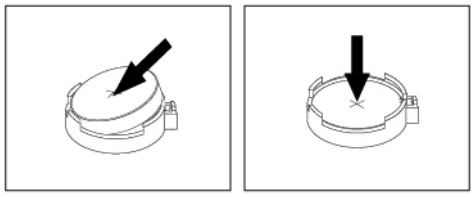

Figure 74. Installing a battery

6. Reinstall the PCI card if you have removed it. See “PCIe card” on page 28 or “Full-length PCIe card” on page 31.
7. Reinstall the computer cover and connect the cables. See “Completing the parts replacement” on page 87.

   Note: When the computer is turned on for the first time after replacing the battery, an error message might be displayed. This is normal after replacing the battery.
8. Turn on the computer and all attached devices.
9. Reset the system date and time in the UEFI BIOS menu.

What to do next:

- To work with another piece of hardware, go to the appropriate section.
- To complete the installation or replacement, go to “Completing the parts replacement” on page 87.

Cover presence switch

Attention: Do not open your computer or attempt any repair before reading and understanding the Appendix B “Important safety information” on page 97.

To remove or install the cover presence switch, do the following:

1. Prepare your computer. See “Preparing your computer” on page 22.
2. Locate the cover presence switch.
3. To remove the cover presence switch, do the following:
   a. Disconnect the cover presence switch cable from the cover presence switch connector on the system board.
   b. Remove the screw that secures the cover presence switch and remove the cover presence switch from the chassis.

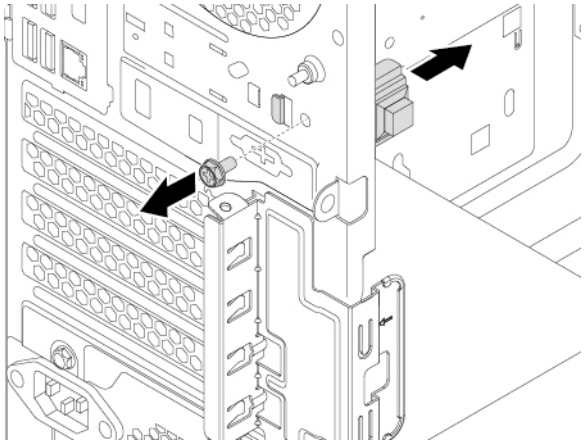

Figure 75. Removing the cover presence switch

4. To install the cover presence switch, do the following:

a. Align the screw hole in the cover presence switch with the corresponding hole in the chassis. Then install the screw to secure the cover presence switch to the chassis.

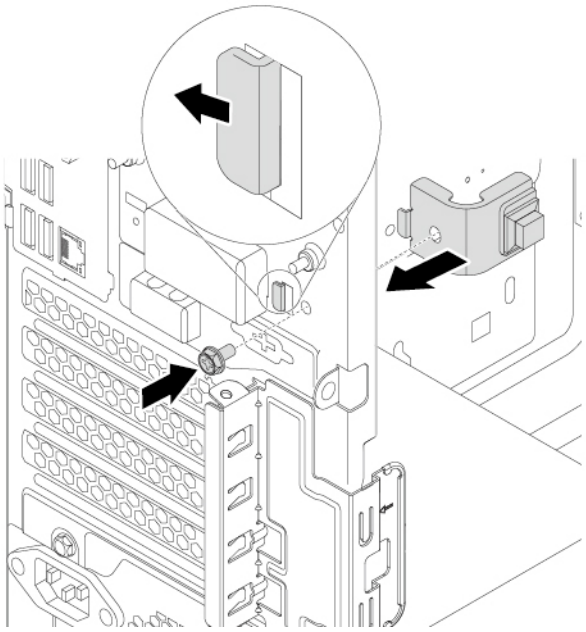

Figure 76. Installing the cover presence switch

b. Connect the cover presence switch cable to the cover presence switch connector on the system board.

What to do next:

- To work with another piece of hardware, go to the appropriate section.
- To complete the installation or replacement, go to “Completing the parts replacement” on page 87.

Power supply assembly

Attention: Do not open your computer or attempt any repair before reading and understanding the Appendix B “Important safety information” on page 97.

Although there are no moving parts in your computer after the power cord has been disconnected, the following warnings are required for your safety.

CAUTION:



Keep fingers and other parts of your body away from hazardous, moving parts. If you suffer an injury, seek medical care immediately.

**DANGER**



Disconnect all power cords from electrical outlets before removing the computer cover or any part that has the above label attached.

DO NOT disassemble components that have the above label attached. There are no serviceable parts inside these components.

Your product is designed for safe use. However, hazardous voltage, current, and energy levels are present inside any component that has this label attached. Disassembling of these components might cause fire or might even result in death. If you suspect a problem with one of these parts, contact a service technician.

To remove and install the power supply assembly, do the following:

1. Prepare your computer. See “Preparing your computer” on page 22.
2. To remove the power supply assembly, do the following:
   a. Disconnect the power supply assembly cables from the system board and all drives.
   b. Release the power supply assembly cables from the cable clips and ties.
   c. Remove the four screws at the rear of the chassis that secure the power supply assembly. Then slide the power supply assembly to the front of the computer and then lift it out of the chassis.

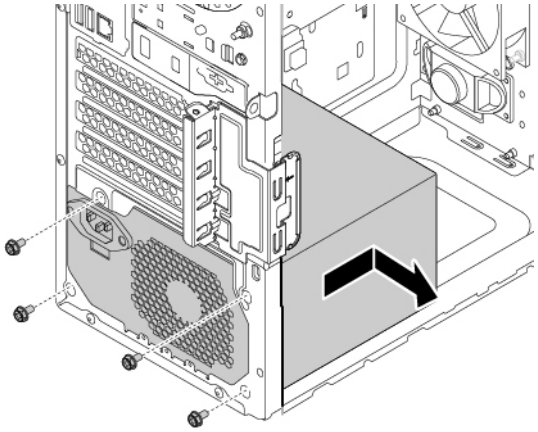

Figure 77. Removing the power supply assembly

3. To install the power supply assembly, do the following:
   a. Ensure that the new power supply assembly is the correct replacement.
   b. Install the new power supply assembly into the chassis so that the screw holes in the power supply assembly align with those in the chassis.
   c. Install and tighten the four screws to secure the power supply assembly.

      Note: Use only screws provided by Lenovo.
   d. Connect the power supply assembly cables to the system board and each of the drives.
   e. Secure the power supply assembly cables with the cable clips and ties in the chassis.

What to do next:

- To work with another piece of hardware, go to the appropriate section.
- To complete the installation or replacement, go to “Completing the parts replacement” on page 87.

Storage drive in the storage-drive bay

Attention: Do not open your computer or attempt any repair before reading and understanding the Appendix B “Important safety information” on page 97.

Your computer comes with a storage-drive bay for installing or replacing a 3.5-inch storage drive or a 2.5-inch storage drive.

3.5-inch storage drive

To replace the 3.5-inch storage drive, do the following:

1. Prepare your computer. See “Preparing your computer” on page 22.
2. Locate the storage-drive bay.
3. To remove the 3.5-inch storage drive, do the following:
   a. Disconnect the signal cable and the power cable from the storage drive.
   b. Push the tab of the plastic 3.5-inch storage-drive bracket as shown and pull the tab outward to remove the storage drive from the storage-drive bay.

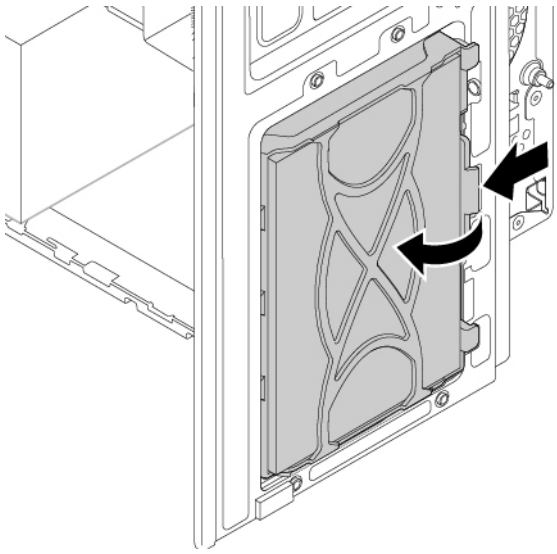

Figure 78. Removing the storage drive

   c. Flex the sides of the bracket to remove the storage drive from the bracket.
4. To install the 3.5-inch storage drive, do the following:
   a. Pull the handle of the plastic 3.5-inch storage-drive bracket to remove it from the storage-drive bay.

b. To install a new storage drive into the bracket, flex the bracket and align pin 1, pin 2, pin 3, and pin 4 on the bracket with the corresponding holes in the storage drive. Do not touch the circuit board 5 on the storage drive.

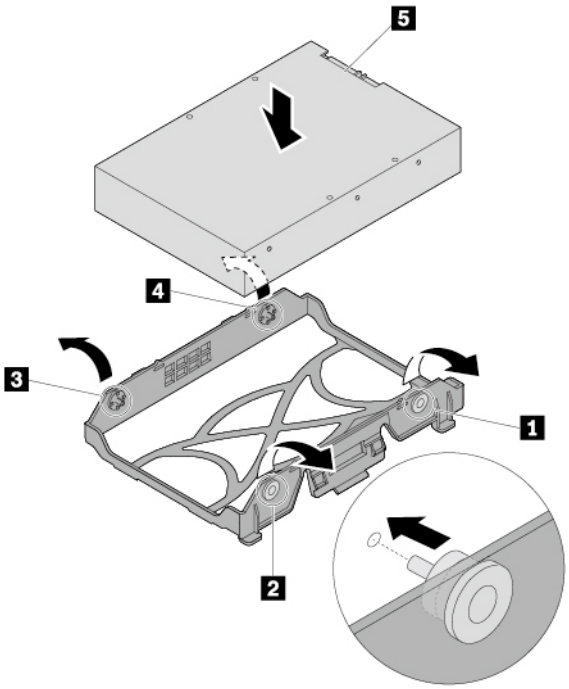

Figure 79. Installing the storage drive into the bracket

c. Align the three plastic tabs on the left side of the storage drive with the corresponding holes in the drive bay assembly. Then pivot the storage drive inward until it snaps into position.

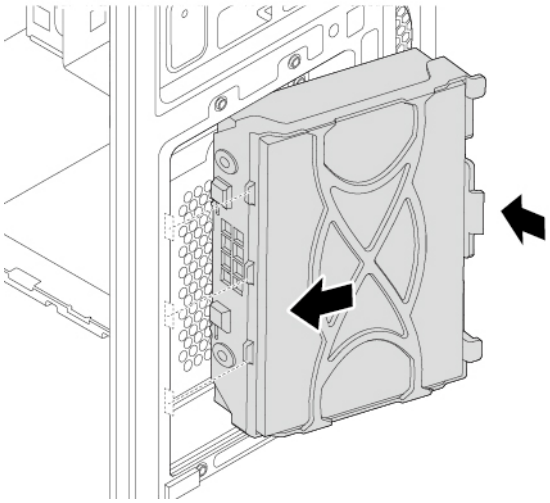

Figure 80. Installing the storage-drive

d. Connect the signal cable and the power cable to the new storage drive.

What to do next:

- To work with another piece of hardware, go to the appropriate section.

- To complete the installation or replacement, go to “Completing the parts replacement” on page 87.

2.5-inch storage drive

To replace the 2.5-inch storage drive, do the following:

1. Prepare your computer. See “Preparing your computer” on page 22.
2. Locate the storage-drive bay.
3. To remove the 2.5-inch storage drive, do the following:
   a. Disconnect the signal cable and the power cable from the storage drive.
   b. Push the tab of the storage-drive bracket as shown and pull the tab outward to remove the storage drive from the storage-drive bay.

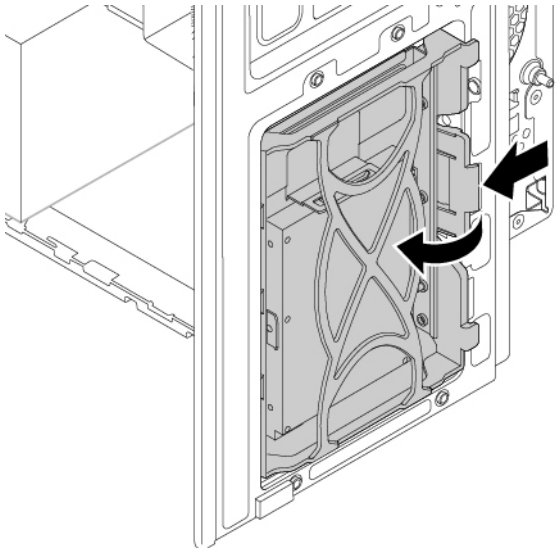

Figure 81. Removing the 2.5-inch storage drive with 3.5-inch storage-drive bracket

c. Flex the sides of the bracket to remove the storage-drive converter from the 3.5-inch storage-drive bracket.

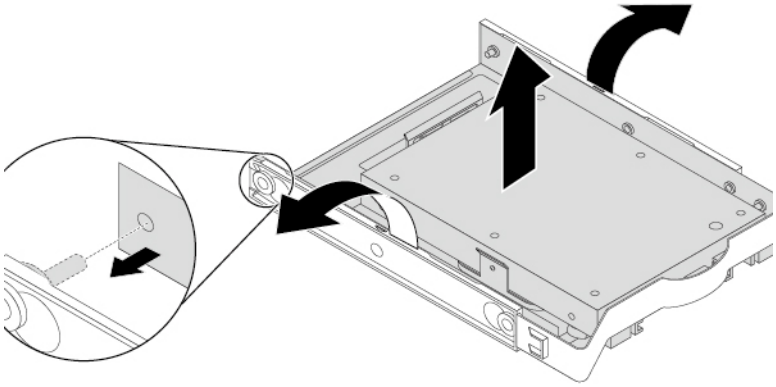

Figure 82. Removing the storage-drive converter from the 3.5-inch storage-drive bracket

d. Remove the four screws that secure the 2.5-inch storage drive. Then lift the storage drive out of the storage-drive converter.

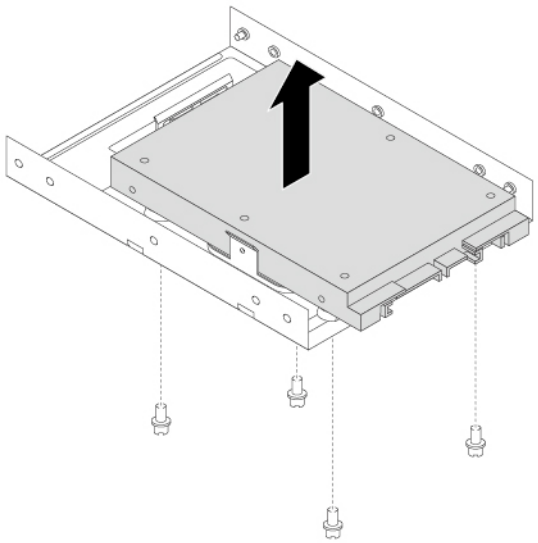

Figure 83. Removing the 2.5-inch storage drive from the storage-drive converter

4. To install the 2.5-inch storage drive, do the following:
   a. Pull the handle of the plastic 3.5-inch storage-drive bracket to remove it from the storage-drive bay.

b. Install a new 2.5-inch storage drive into the storage-drive converter. Then install the four screws to secure the new storage drive to the storage-drive converter.

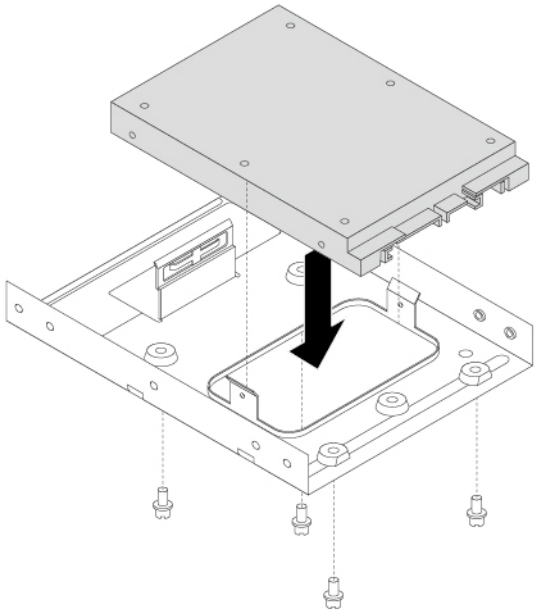

Figure 84. Installing the new 2.5-inch storage drive into the storage-drive converter

c. To install a new 2.5-inch storage drive into the bracket, flex the bracket and align pin 1, pin 2, pin 3, and pin 4 on the bracket with the corresponding holes in the storage drive. Do not touch the circuit board 5 on the storage drive.

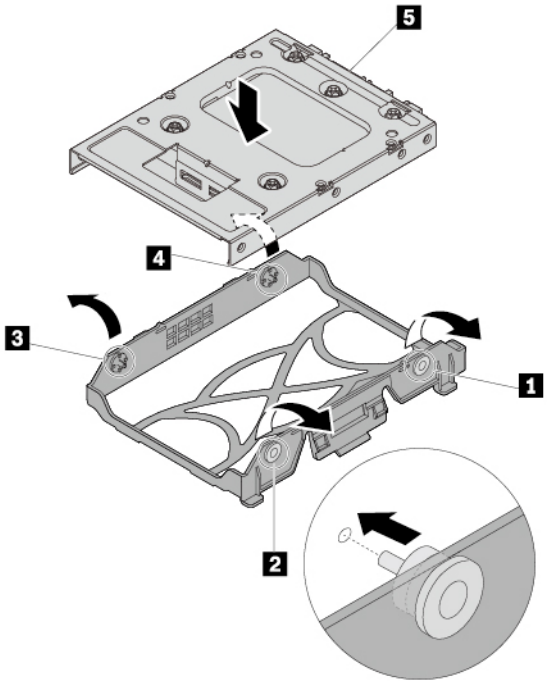

Figure 85. Installing the 2.5-inch storage drive with the storage-drive converter into the bracket

d. Align the three plastic tabs on the left side of the storage drive with the corresponding holes in the drive bay assembly. Then pivot the storage drive inward until it snaps into position.

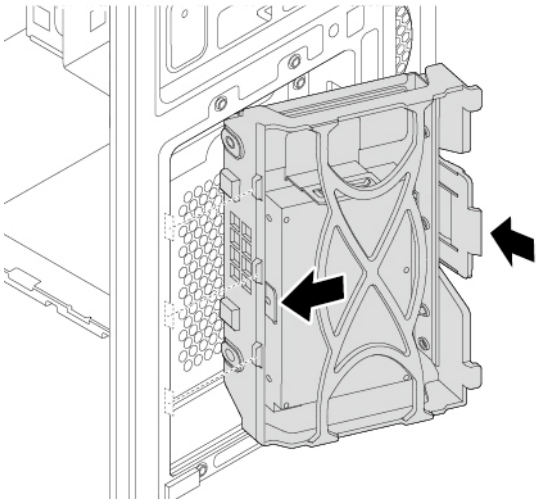

Figure 86. Installing the 2.5-inch storage drive

e. Connect the signal cable and the power cable to the new storage drive.

What to do next:

- To work with another piece of hardware, go to the appropriate section.

- To complete the installation or replacement, go to “Completing the parts replacement” on page 87.

Type-1 storage-drive cage

Attention: Do not open your computer or attempt any repair before reading and understanding the Appendix B “Important safety information” on page 97.

Some computer models come with a type-1 storage-drive cage for installing or replacing a 3.5-inch storage drive or a 2.5-inch storage drive.

3.5-inch storage drive

To remove or install a 3.5-inch storage drive in the type-1 storage-drive cage, do the following:

1. Prepare your computer. See “Preparing your computer” on page 22.
2. Locate the type-1 storage-drive cage.
3. To remove a 3.5-inch storage drive in the type-1 storage-drive cage, do the following:
   a. Disconnect the signal cable and the power cable from the storage drive.
   b. Remove the screw and slide the type-1 storage-drive cage downward to release it from the drive bay assembly.

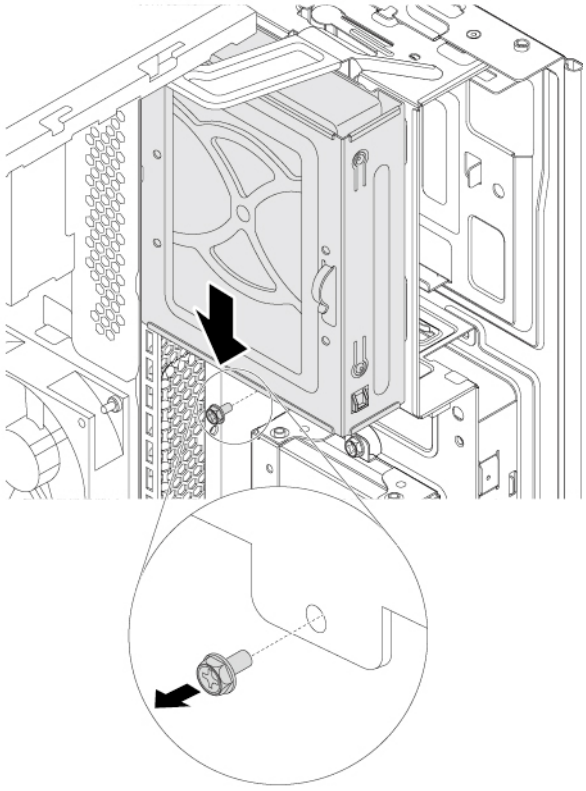

Figure 87. Removing the type-1 storage-drive cage

c. Pull the handle of the plastic 3.5-inch storage-drive bracket to remove the storage drive from the type-1 storage-drive cage.

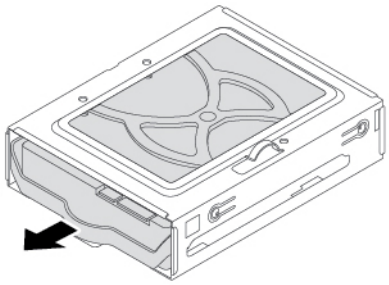

Figure 88. Removing the 3.5-inch storage drive

d. Flex the sides of the bracket to remove the storage drive from the bracket.

4. To install a 3.5-inch storage drive in the type-1 storage-drive cage, do the following:

a. To install a new storage drive into the bracket, flex the bracket and align pin 1, pin 2, pin 3, and pin 4 on the bracket with the corresponding holes in the storage drive. Do not touch the circuit board 5 on the storage drive.

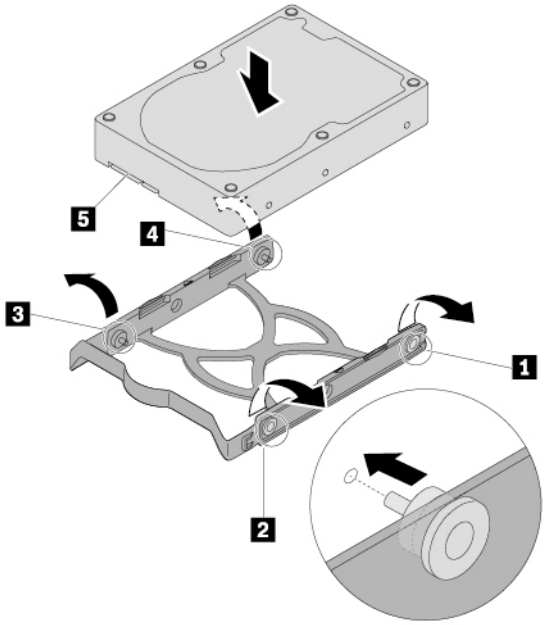

Figure 89. Installing the storage drive into the bracket

b. Slide the new storage drive into the type-1 storage-drive cage until it snaps into position.

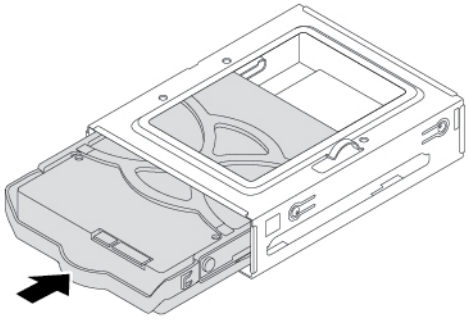

Figure 90. Installing the storage drive

c. Align the four holes in the rear of the type-1 storage-drive cage with the corresponding hooks in the drive bay assembly. Then slide the type-1 storage-drive cage upward until it snaps into position. Reinstall the screw to secure the type-1 storage-drive cage.

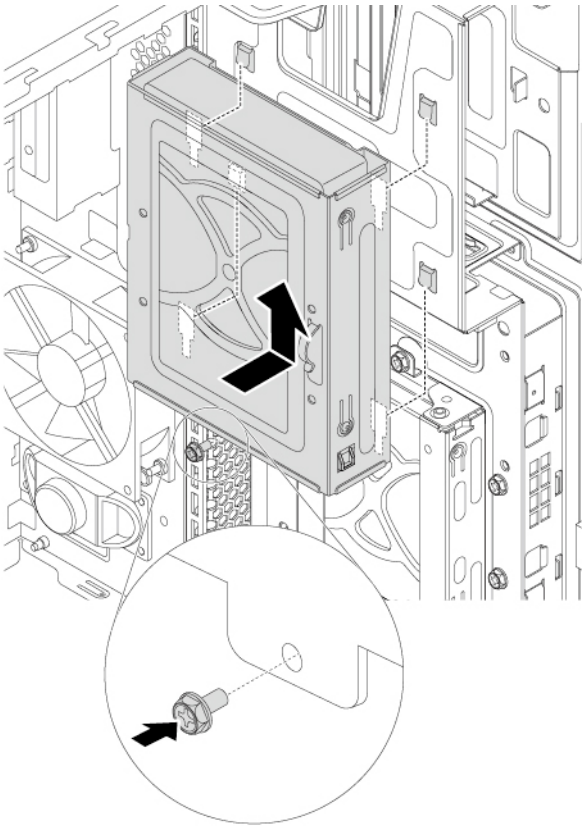

Figure 91. Installing the type-1 storage-drive cage

d. Connect the signal cable and the power cable to the new storage drive.

What to do next:

- To work with another piece of hardware, go to the appropriate section.
- To complete the installation or replacement, go to “Completing the parts replacement” on page 87.

2.5-inch storage drive

To remove or install a 2.5-inch storage drive with a 2.5-inch to 3.5-inch storage-drive converter (hereafter referred to as storage-drive converter), do the following:

1. Prepare your computer. See “Preparing your computer” on page 22.
2. Locate the type-1 storage-drive cage.
3. To remove a 2.5-inch storage drive with a storage-drive converter in the type-1 storage-drive cage, do the following:
   a. Disconnect the signal cable and the power cable from the storage drive.

b. Remove the screw and slide the type-1 storage-drive cage downward to release it from the drive bay assembly.

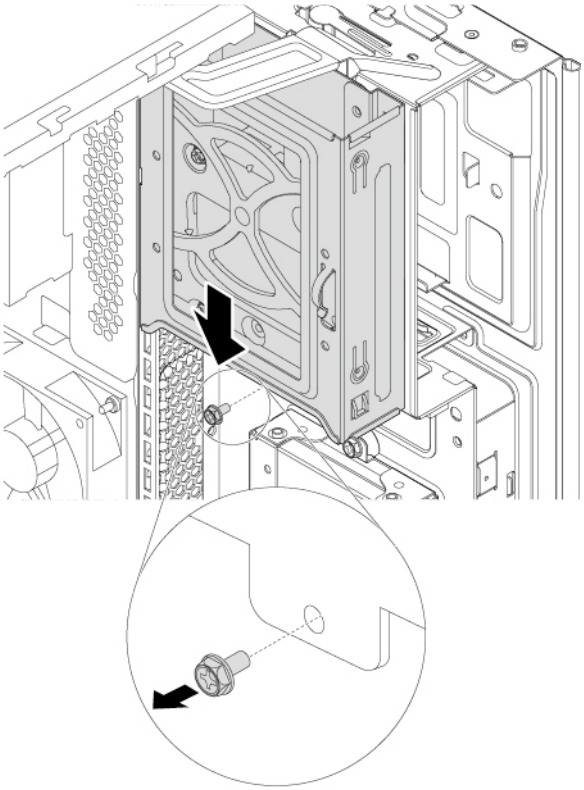

Figure 92. Removing the type-1 storage-drive cage

c. Pull the handle of the storage-drive bracket to remove the storage drive from the type-1 storage-drive cage.

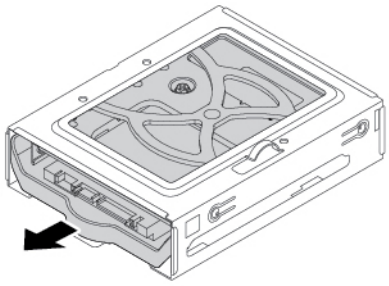

Figure 93. Removing the 2.5-inch storage drive

d. Flex the sides of the bracket to remove the storage-drive converter from the bracket.

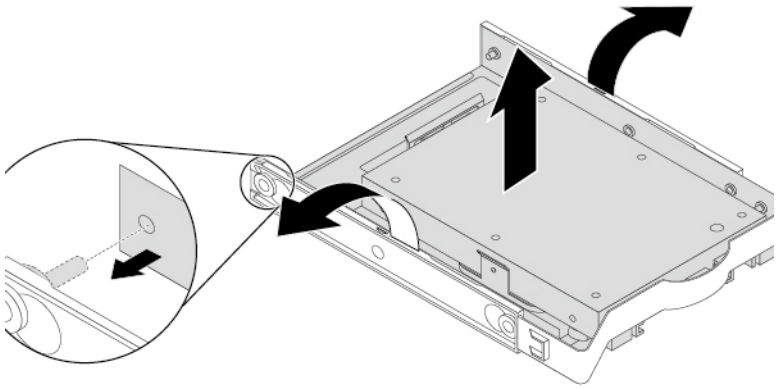

Figure 94. Removing the storage-drive converter from the storage-drive bracket

e. Remove the four screws that secure the 2.5-inch storage drive. Then lift the storage drive out of the storage-drive converter.

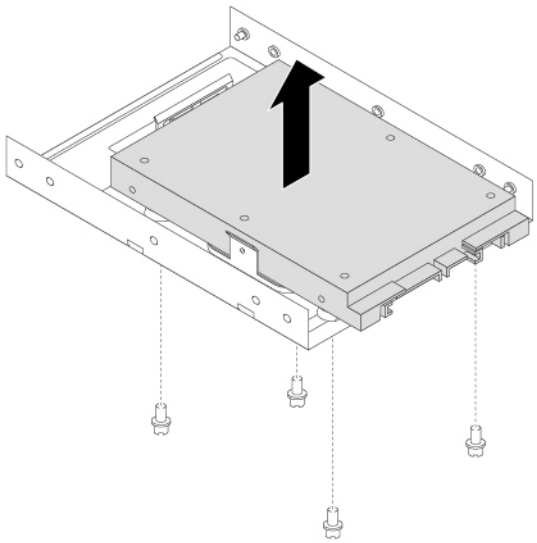

Figure 95. Removing the 2.5-inch storage drive from the storage-drive converter

4. To install a new 2.5-inch storage drive in the type-1 storage-drive cage, do the following:

a. Install the 2.5-inch storage drive with a storage-drive converter into the storage-drive converter. Then install the four screws to secure the new storage drive to the storage-drive converter.

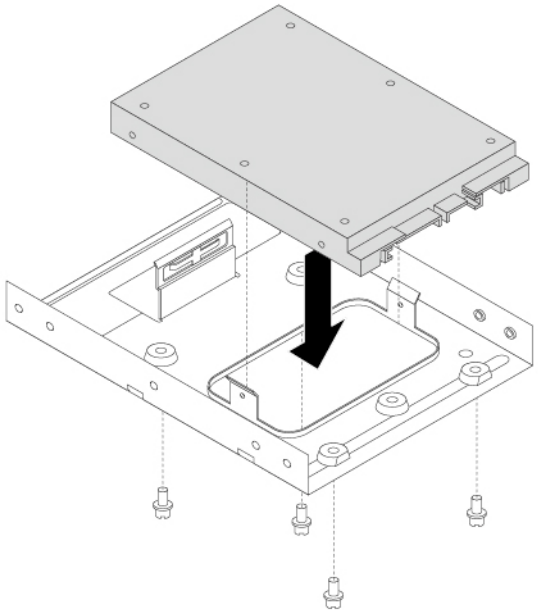

Figure 96. Installing the 2.5-inch storage drive into the storage-drive converter

b. To install a new storage drive into the bracket, flex the bracket and align pin 1, pin 2, pin 3, and pin 4 on the bracket with the corresponding holes in the storage drive. Do not touch the circuit board 5 on the storage drive.

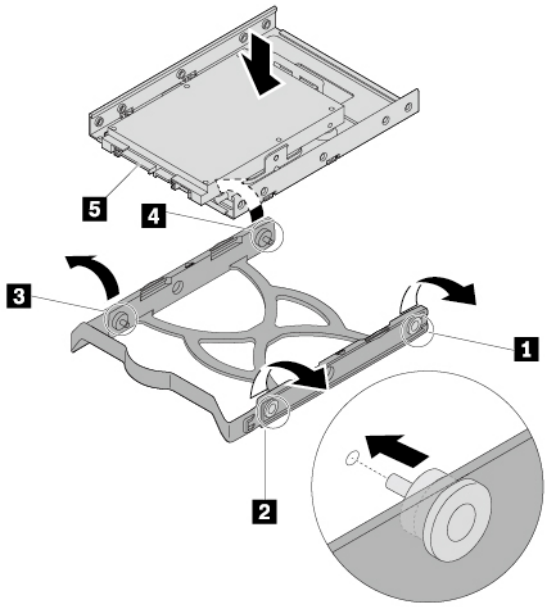

Figure 97. Installing the 2.5-inch storage drive into the bracket

c. Slide the new storage drive with the storage-drive converter into the type-1 storage-drive cage until it snaps into position.

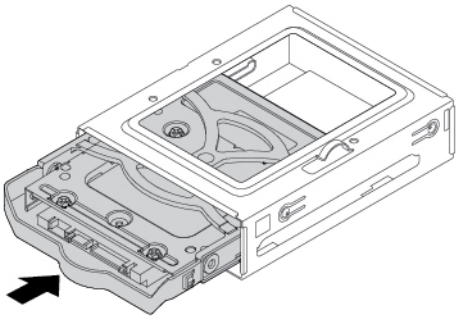

Figure 98. Installing the 2.5-inch storage drive into the type-1 storage-drive cage

d. Align the four holes in the rear of the type-1 storage-drive cage with the corresponding hooks in the drive bay assembly. Then slide the type-1 storage-drive cage upward until it snaps into position. Reinstall the screw to secure the type-1 storage-drive cage.

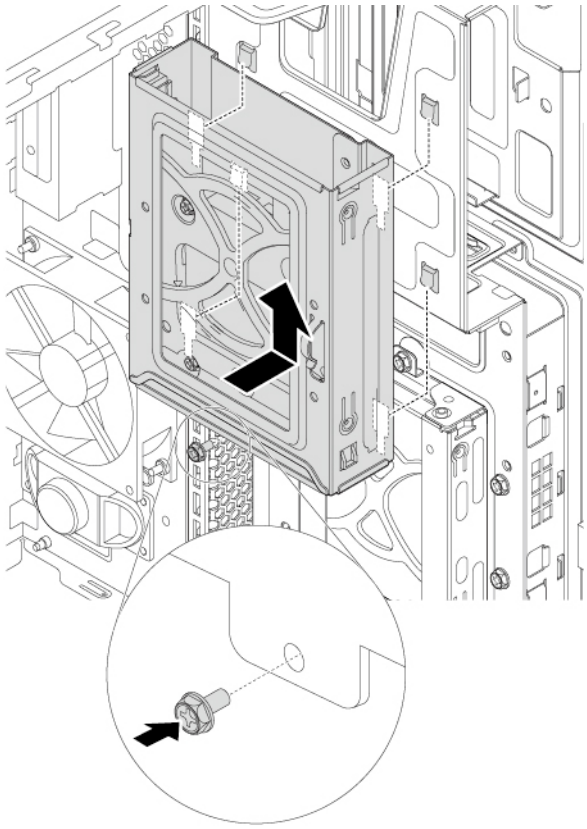

Figure 99. Installing the type-1 storage-drive cage

e. Connect the signal cable and the power cable to the new storage drive.

What to do next:

- To work with another piece of hardware, go to the appropriate section.
- To complete the installation or replacement, go to “Completing the parts replacement” on page 87.

Type-2 storage-drive cage

Attention: Do not open your computer or attempt any repair before reading and understanding the Appendix B “Important safety information” on page 97.

Some computer models come with a type-2 storage-drive cage for installing or replacing a 2.5-inch storage drive.

To replace the 2.5-inch storage drive, do the following:

1. Prepare your computer. See “Preparing your computer” on page 22.
2. Locate the type-2 storage-drive cage.
3. To remove a 2.5-inch storage drive from the type-2 storage-drive cage, do the following:
   a. Disconnect the signal cable and the power cable from the 2.5-inch storage drive.

b. Remove the screw and slide the type-2 storage-drive cage downward to release it from the drive bay assembly.

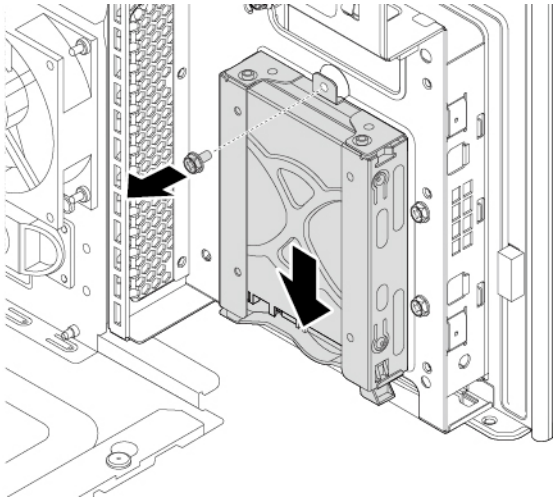

Figure 100. Removing the type-2 storage-drive cage

c. Pull the handle of the plastic 2.5-inch storage-drive bracket to remove it from the type-2 storage-drive cage.

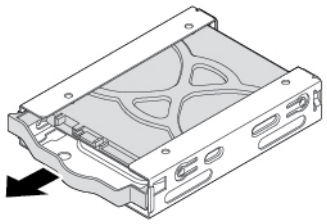

Figure 101. Removing the 2.5-inch storage drive

d. Flex the sides of the bracket to remove the storage drive from the bracket.

4. To install a new 2.5-inch storage drive into the type-2 storage-drive cage, do the following:

a. To install a new 2.5-inch storage drive into the bracket, flex the bracket and align pin 1, pin 2, pin 3, and pin 4 on the bracket with the corresponding holes in the storage drive. Do not touch the circuit board 5 on the storage drive.

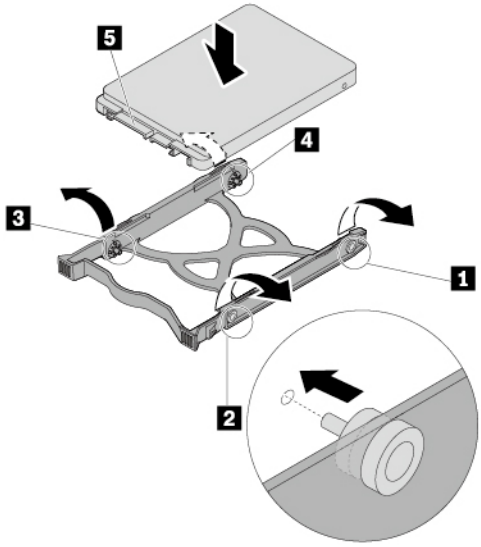

Figure 102. Installing the 2.5-inch storage drive into the bracket

b. Slide the new storage drive into the type-2 storage-drive cage until it snaps into position.

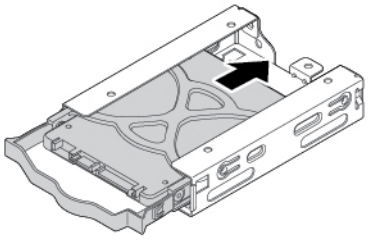

Figure 103. Installing the 2.5-inch storage drive into the type-2 storage-drive cage

c. Align the four holes in the rear of the type-2 storage-drive cage with the corresponding hooks in the drive bay assembly. Then slide the type-2 storage-drive cage upward until it snaps into position. Reinstall the screw to secure the type-2 storage-drive cage.

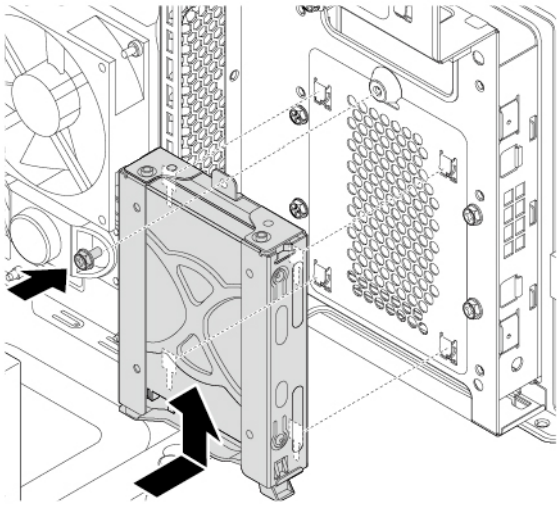

Figure 104. Installing the type-2 storage-drive cage

d. Connect the signal cable and the power cable to the new storage drive.

What to do next:

- To work with another piece of hardware, go to the appropriate section.
- To complete the installation or replacement, go to “Completing the parts replacement” on page 87.

Heat-sink-and-fan assembly

Attention: Do not open your computer or attempt any repair before reading and understanding the Appendix B “Important safety information” on page 97.

CAUTION:



Avoid contact with hot components inside the computer. During operation, some components become hot enough to burn the skin. Before you open the computer cover, turn off the computer, disconnect power, and wait approximately 10 minutes for the components to cool.

To remove or install the heat-sink-and-fan assembly, do the following:

1. Prepare your computer. See “Preparing your computer” on page 22.
2. Lay the computer on its side for easier access to the system board.
3. To remove the heat-sink-and-fan assembly, do the following:
   a. Disconnect the heat-sink-and-fan assembly cable from the microprocessor fan connector on the system board.

b. Follow the following sequence to loosen the four screws that secure the heat-sink-and-fan assembly to the system board:

- Partially loosen screw 1, fully loosen screw 2, and then fully loosen screw 1.
- Partially loosen screw 3, fully loosen screw 4, and then fully loosen screw 3.

Note: Carefully loosen the four screws to avoid any possible damage to the system board. The four screws cannot be removed from the heat-sink-and-fan assembly.

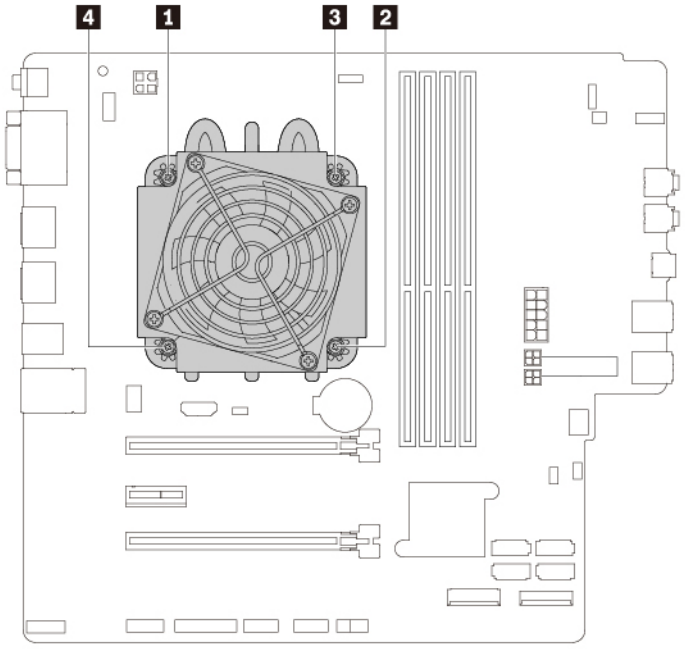

Figure 105. Removing the heat-sink-and-fan assembly

c. Lift the failing heat-sink-and-fan assembly off the system board.

Notes:

- You might have to gently twist the heat-sink-and-fan assembly to free it from the microprocessor.
- Do not touch the thermal grease while handling the heat-sink-and-fan assembly.

4. To install the heat-sink-and-fan assembly, do the following:
   a. Apply appropriate amount of thermal grease to the new heat-sink-and-fan assembly.
   b. Position the heat-sink-and-fan assembly on the system board. Ensure that the four screws are aligned with the holes in the system board.

      Note: Ensure that the heat-sink-and-fan assembly cable is toward the microprocessor fan connector on the system board.

   c. Follow the following sequence to tighten the four screws to secure the new heat-sink-and-fan assembly. Do not over-tighten the screws.

      - Partially tighten screw 1, fully tighten screw 2, and then fully tighten screw 1.
      - Partially tighten screw 3, fully tighten screw 4, and then fully tighten screw 3.

d. Connect the heat-sink-and-fan assembly cable to the microprocessor fan connector on the system board.

What to do next:

- To work with another piece of hardware, go to the appropriate section.
- To complete the installation or replacement, go to “Completing the parts replacement” on page 87.

Completing the parts replacement

CAUTION:



After replacing a CRU, reinstall all protective covers, including the computer cover, before connecting power and operating the computer. This action is important to help prevent unexpected electrical shock and help ensure the containment of an unexpected fire that could happen under extremely rare conditions.

After completing the installation or replacement for all parts, pivot the drive bay assembly inward, reinstall the front bezel, reinstall the computer cover, and reconnect cables.

To complete the parts replacement, do the following:

1. Ensure that all components have been reassembled correctly and that no tools or loose screws are left inside your computer.
2. Ensure that the cables are routed correctly before reinstalling the computer cover. Keep cables clear of the hinges and sides of the computer chassis to avoid interference with reinstalling the computer cover.
3. Press the release tab as shown and pivot the drive bay assembly inward until it snaps into position.

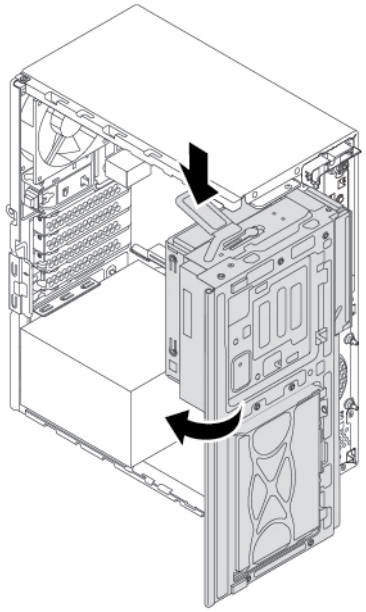

Figure 106. Pivoting the drive bay assembly downward

4. To reinstall the front bezel, first align the three plastic tabs on the front bezel with the corresponding holes in the chassis. Then pivot the front bezel inward until it snaps into position.

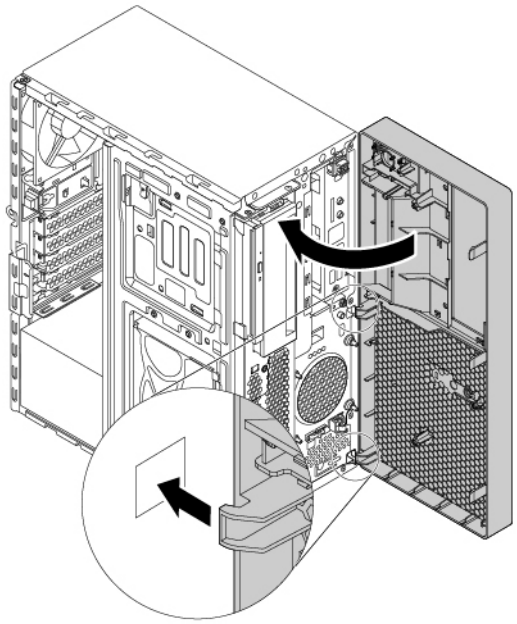

Figure 107. Reinstalling the front bezel

5. Position the computer cover on the chassis so that the rail guides on the bottom of the computer cover engage the rails on the chassis. Then, push the cover to the front of the computer until it snaps into position. Install the screws to secure the computer cover.

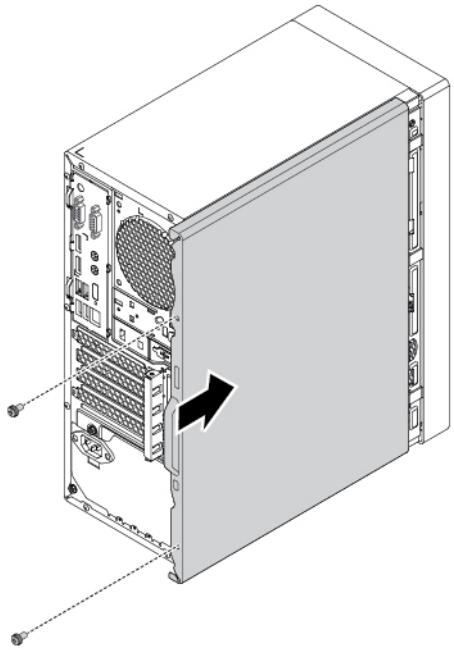

Figure 108. Reinstalling the computer cover

6. Reinstall the dust shield if you have removed it.

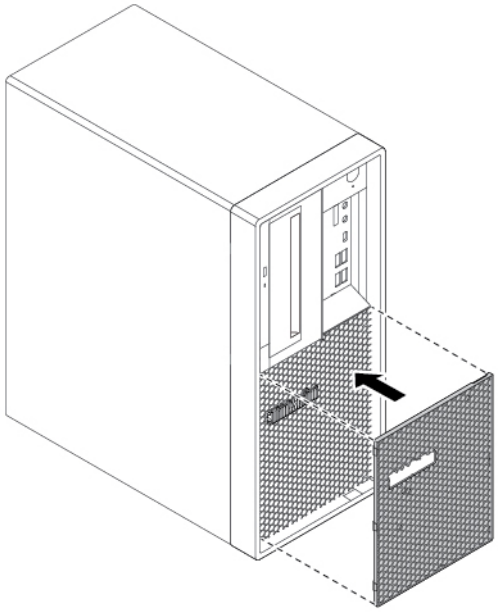

Figure 109. Reinstalling the dust shield

7. If there is any locking device available, lock the computer cover.
8. Reconnect the external cables and power cords to the corresponding connectors on the computer. See Chapter 1 “Meet your computer” on page 1.

Chapter 7. Help and support

Self-help resources

Use the following self-help resources to learn more about the computer and troubleshoot problems.

Resources	How to access?
Product documentation: • *Safety and Warranty Guide* • *Setup Guide* • This *User Guide* • *Regulatory Notice*	Go to https://pcsupport.lenovo.com. Then, follow the on-screen instructions to filter out the documentation you want.
Lenovo Support Web site with the latest support information of the following: • Drivers and software • Diagnostic solutions • Product and service warranty • Product and parts details • Knowledge base and frequently asked questions	https://pcsupport.lenovo.com
Ubuntu help information	https://help.ubuntu.com/lts/ubuntu-help/index.html

© Copyright Lenovo 2020

Call Lenovo

If you have tried to correct the problem yourself and still need help, you can call Lenovo Customer Support Center.

Before you contact Lenovo

Prepare the following before you contact Lenovo:

1. Record the problem symptoms and details:
   - What is the problem? Is it continuous or intermittent?
   - Any error message or error code?
   - What operating system are you using? Which version?
   - Which software applications were running at the time of the problem?
   - Can the problem be reproduced? If so, how?
2. Record the system information:
   - Product name
   - Machine type and serial number

The following illustration shows where to find the machine type and serial number of your computer.

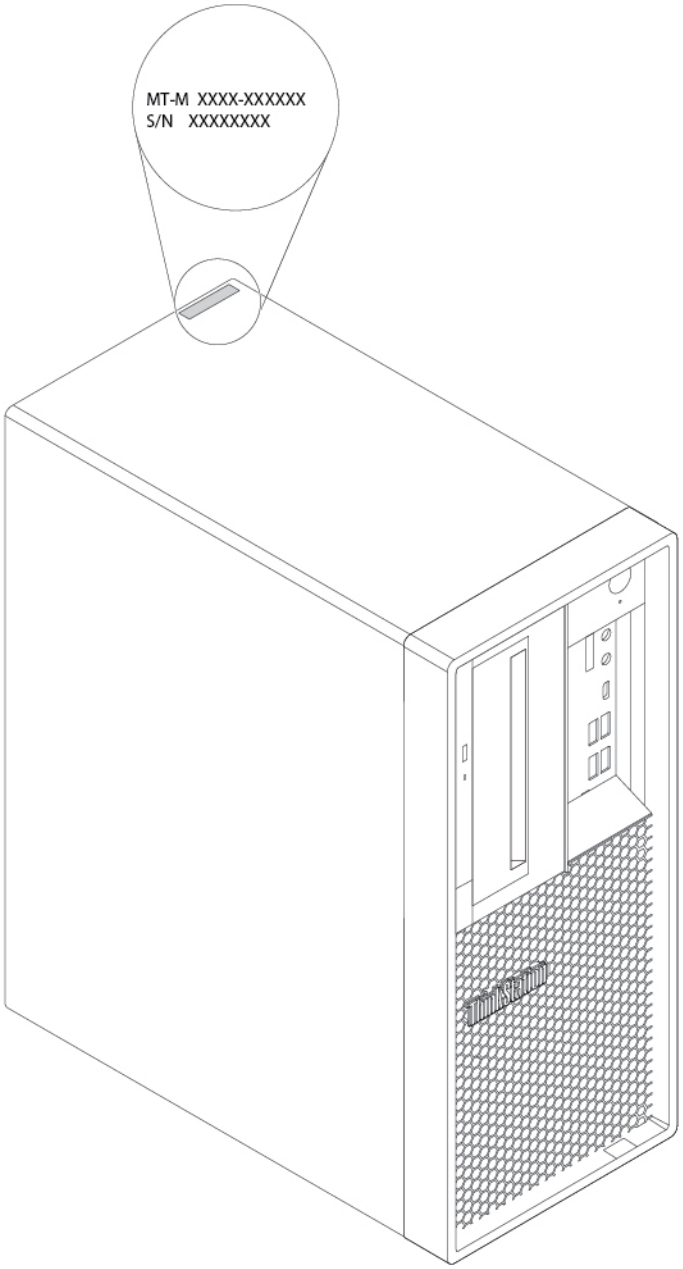

Lenovo Customer Support Center

During the warranty period, you can call Lenovo Customer Support Center for help.

Telephone numbers

For a list of the Lenovo Support phone numbers for your country or region, go to:
https://pcsupport.lenovo.com/supportphonelist

Note: Phone numbers are subject to change without notice. If the number for your country or region is not provided, contact your Lenovo reseller or Lenovo marketing representative.

Services available during the warranty period

- Problem determination - Trained personnel are available to assist you with determining if you have a hardware problem and deciding what action is necessary to fix the problem.
- Lenovo hardware repair - If the problem is determined to be caused by Lenovo hardware under warranty, trained service personnel are available to provide the applicable level of service.
- Engineering change management - Occasionally, there might be changes that are required after a product has been sold. Lenovo or your reseller, if authorized by Lenovo, will make selected Engineering Changes (ECs) that apply to your hardware available.

Services not covered

- Replacement or use of parts not manufactured for or by Lenovo or nonwarranted parts
- Identification of software problem sources
- Configuration of UEFI BIOS as part of an installation or upgrade
- Changes, modifications, or upgrades to device drivers
- Installation and maintenance of network operating systems (NOS)
- Installation and maintenance of programs

For the terms and conditions of the Lenovo Limited Warranty that apply to your Lenovo hardware product, see “Warranty information” in the *Safety and Warranty Guide* that comes with your computer.

Purchase additional services

During and after the warranty period, you can purchase additional services from Lenovo at: https://www.lenovo.com/services

Service availability and service name might vary by country or region.

Appendix A. Supplemental information about the Ubuntu operating system

In limited countries or regions, Lenovo offers customers an option to order computers with the preinstalled Ubuntu® operating system.

If the Ubuntu operating system is available on your computer, read the following information before you use the computer. Ignore any information related to Windows-based programs, utilities, and Lenovo preinstalled applications in this documentation.

Access the Lenovo Limited Warranty

This product is covered by the terms of the Lenovo Limited Warranty (LLW), version L505-0010-02 08/2011. You can view the LLW in a number of languages from the following Web site. Read the Lenovo Limited Warranty at:
https://www.lenovo.com/warranty/llw_02

The LLW also is preinstalled on the computer. To access the LLW, go to the following directory:

```
/opt/lenovo
```

If you cannot view the LLW either from the Web site or from your computer, contact your local Lenovo office or reseller to obtain a printed version of the LLW.

Access the Ubuntu help system

The Ubuntu help system provides information about how to use the Ubuntu operating system. To access the help system from Home Screen, move your pointer to the Launch bar, and then click the **Help** icon. If you cannot find the **Help** icon from the Launch bar, click the **Search** icon on the bottom left, and type Help to search it.

To learn more about the Ubuntu operating system, go to:
https://www.ubuntu.com

Get support information

If you need help, service, technical assistance, or more information about the Ubuntu operating system or other applications, contact the provider of the Ubuntu operating system or the provider of the application. If you need the service and support for hardware components shipped with your computer, contact Lenovo. For more information about how to contact Lenovo, refer to the *User Guide* and *Safety and Warranty Guide*.

To access the latest *User Guide* and *Safety and Warranty Guide*, go to:
https://pcsupport.lenovo.com

Open source information

This “Device” includes software made publicly available by Lenovo, including software licensed under the General Public License and/or the Lesser General Public License (the “open source software”).

You may obtain a copy of the corresponding source code for any such open source software licensed under the General Public License and/or the Lesser General Public License (or any other license requiring us to make a written offer to provide corresponding source code to you) from Lenovo for a period of three years without charge except for the cost of media, shipping, and handling, upon written request to Lenovo. This offer is valid to anyone in receipt of this Device.

© Copyright Lenovo 2020

You may send your request in writing to the address below accompanied by a check or money order for $15 to:

Lenovo Legal Department
Attn: Open Source Team / Source Code Requests
8001 Development Dr.
Morrisville, NC 27560

Please include the version of the OS and the version of the Linux Kernel pre-shipped on this Device as part of your request. Be sure to provide a return address.

The open source software is distributed in hope it will be useful, but WITHOUT ANY WARRANTY; without even the implied warranty of MERCHANTABILITY or FITNESS FOR A PARTICULAR PURPOSE. See for example the GNU General Public License and/or the Lesser General Public License for more information.

To view additional information regarding licenses, acknowledgments and required copyright notices for the open source software shipped on your Device, go to `/usr/share/doc/*/copyright`.

Appendix B. Important safety information

Safety notices

This information can help you safely use your computer. Follow and retain all information included with your computer. The information in this document does not alter the terms of your purchase agreement or the Limited Warranty. For more information, see "Warranty Information" in the *Safety and Warranty Guide* that comes with your computer.

Customer safety is important. Our products are developed to be safe and effective. However, personal computers are electronic devices. Power cords, power adapters, and other features can create potential safety risks that can result in physical injury or property damage, especially if misused. To reduce these risks, follow the instructions included with your product, observe all warnings on the product and in the operating instructions, and review the information included in this document carefully. By carefully following the information contained in this document and provided with your product, you can help protect yourself from hazards and create a safer computer work environment. If the computer is used in a manner not specified by the manufacturer, the protection provided by the computer may be impaired.

Note: This information includes references to power adapters and batteries. In addition, some products (such as speakers and monitors) ship with external power adapters. If you have such a product, this information applies to your product. In addition, computer products contain a coin-sized internal battery that provides power to the system clock even when the computer is unplugged, so the battery safety information applies to all computer products.

Conditions that require immediate action

Products can become damaged due to misuse or neglect. Some product damage is serious enough that the product should not be used again until it has been inspected and, if necessary, repaired by an authorized servicer.

As with any electronic device, pay close attention to the product when it is turned on.

On very rare occasions, you might notice an odor or see a puff of smoke or sparks vent from your product. You might also hear sounds like popping, cracking, or hissing. These might merely mean that an internal electronic component has failed in a safe and controlled manner. Or, they might indicate a potential safety issue. Do not take risks or attempt to diagnose the situation yourself. Contact the Customer Support Center for further guidance. For a list of Service and Support phone numbers, see the following Web site:

https://pcsupport.lenovo.com/supportphonelist

Frequently inspect your computer and its components for damage, wear, or signs of danger. If you have any question about the condition of a component, do not use the product. Contact the Customer Support Center or the product manufacturer for instructions on how to inspect the product and have it repaired, if necessary.

In the unlikely event that you notice any of the following conditions, or if you have any safety concerns with your product, stop using the product and unplug it from the power source and telecommunication lines until you can speak to the Customer Support Center for further guidance.

- Power cords, plugs, power adapters, extension cords, surge protectors, or power supplies that are cracked, broken, or damaged.

© Copyright Lenovo 2020

- Signs of overheating, smoke, sparks, or fire.
- Damage to a battery (such as cracks, dents, or creases), discharge from a battery, or a buildup of foreign substances on the battery.
- A cracking, hissing, or popping sound, or strong odor that comes from the product.
- Signs that liquid has been spilled or an object has fallen onto the computer product, the power cord, or power adapter.
- The computer product, power cord, or power adapter has been exposed to water.
- The product has been dropped or damaged in any way.
- The product does not operate normally when you follow the operating instructions.

Note: If you notice these conditions with a product (such as an extension cord) that is not manufactured for or by Lenovo, stop using that product until you can contact the product manufacturer for further instructions, or until you get a suitable replacement.

Service and upgrades

Do not attempt to service a product yourself unless instructed to do so by the Customer Support Center or your documentation. Only use a Service Provider who is approved to repair your particular product.

Note: Some computer parts can be upgraded or replaced by the customer. Upgrades typically are referred to as options. Replacement parts approved for customer installation are referred to as Customer Replaceable Units, or CRUs. Lenovo provides documentation with instructions when it is appropriate for customers to install options or replace CRUs. You must closely follow all instructions when installing or replacing parts. The Off state of a power indicator does not necessarily mean that voltage levels inside a product are zero. Before you remove the covers from a product equipped with a power cord, always ensure that the power is turned off and that the product is unplugged from any power source. If you have any questions or concerns, contact the Customer Support Center.

Although there are no moving parts in the computer after the power cord has been disconnected, the following warnings are required for your safety.



Moving Parts:

Keep fingers and other parts of your body away from hazardous, moving parts. If you suffer an injury, seek medical care immediately.



Hot Surface:

Avoid contact with hot components inside the computer. During operation, some components become hot enough to burn the skin. Before you open the computer cover, turn off the computer, disconnect power, and wait approximately 10 minutes for the components to cool.



After replacing a CRU, reinstall all protective covers, including the computer cover, before connecting power and operating the computer. This action is important to help prevent unexpected electrical shock and help ensure the containment of an unexpected fire that could happen under extremely rare conditions.



Sharp Edges:

When replacing CRUs, be cautious of sharp edges or corners that might cause injury. If you suffer an injury, seek medical care immediately.

Power cords and power adapters

**DANGER**

Use only the power cords and power adapters supplied by the product manufacturer.

The power cords shall be safety approved. For Germany, it shall be H03VV-F, 3G, 0.75 mm^2, or better. For other countries, the suitable types shall be used accordingly.

Never wrap a power cord around a power adapter or other object. Doing so can stress the cord in ways that can cause the cord to fray, crack, or crimp. This can present a safety hazard.

Always route power cords so that they will not be walked on, tripped over, or pinched by objects.

Protect power cords and power adapters from liquids. For instance, do not leave your power cord or power adapter near sinks, tubs, toilets, or on floors that are cleaned with liquid cleansers. Liquids can cause a short circuit, particularly if the power cord or power adapter has been stressed by misuse. Liquids also can cause gradual corrosion of power cord terminals and/or the connector terminals on a power adapter, which can eventually result in overheating.

Ensure that all power cord connectors are securely and completely plugged into receptacles.

Do not use any power adapter that shows corrosion at the ac input pins or shows signs of overheating (such as deformed plastic) at the ac input pins or anywhere on the power adapter.

Do not use any power cords where the electrical contacts on either end show signs of corrosion or overheating or where the power cord appears to have been damaged in any way.

To prevent possible overheating, do not cover the power adapter with clothing or other objects when the power adapter is plugged into an electrical outlet.

Power cord notice

Note: The power cord and adapter provided with this product are intended to be used with this product only. Do not use them with any other products.

For your safety, Lenovo provides a power cord with a grounded attachment plug to use with this product. To avoid electrical shock, always use the power cord and plug with a properly grounded outlet.

Power cords provided by Lenovo in the United States and Canada are listed by Underwriter's Laboratories (UL) and certified by the Canadian Standards Association (CSA).

For units intended to be operated at 115 volts: Use a UL-listed and CSA-certified cord set consisting of a minimum 18 AWG, Type SVT or SJT, three-conductor cord, a maximum of 15 feet in length and a parallel blade, grounding-type attachment plug rated 10 amperes, 125 volts.

For units intended to be operated at 230 volts (U.S. use): Use a UL-listed and CSA-certified cord set consisting of a minimum 18 AWG, Type SVT or SJT, three-conductor cord, a maximum of 15 feet in length and a tandem blade, grounding-type attachment plug rated 10 amperes, 250 volts.

For units intended to be operated at 230 volts (outside the U.S.): Use a cord set with a grounding-type attachment plug. The cord set should have the appropriate safety approvals for the country in which the equipment will be installed.

Power cords provided by Lenovo for a specific country or region are usually available only in that country or region.

For units intended to be operated in Germany: The power cords must be safety approved. For Germany, it must be H05VV-F, 3G, 0.75 mm2, or better. For other countries, the suitable types must be used accordingly.

For units intended to be operated in Denmark: Use a cord set with a grounding-type attachment plug. The cord set should have the appropriate safety approvals for the country in which the equipment will be installed.

For units intended to be operated in Norway, Sweden, Finland: Use a cord set with a two-prong attachment plug. The cord set should have the appropriate safety approvals for the country in which the equipment will be installed.

If you intend to use your PC in a country or region that is different from your ordering location, please purchase an additional Lenovo power cord for the country or region where the PC will be used. Refer to the power cord guide provided in our Web site, https://pcsupport.lenovo.com, for details. Some countries and regions support multiple voltages, so make sure you order the appropriate power cord for the intended voltage.

Extension cords and related devices

Ensure that extension cords, surge protectors, uninterruptible power supplies, and power strips that you use are rated to handle the electrical requirements of the product. Never overload these devices. If power strips are used, the load should not exceed the power strip input rating. Consult an electrician for more information if you have questions about power loads, power requirements, and input ratings.

Plugs and outlets

DANGER

If a receptacle (power outlet) that you intend to use with your computer equipment appears to be damaged or corroded, do not use the outlet until it is replaced by a qualified electrician.

Do not bend or modify the plug. If the plug is damaged, contact the manufacturer to obtain a replacement.

Do not share an electrical outlet with other home or commercial appliances that draw large amounts of electricity; otherwise, unstable voltage might damage your computer, data, or attached devices.

Some products are equipped with a three-pronged plug. This plug fits only into a grounded electrical outlet. This is a safety feature. Do not defeat this safety feature by trying to insert it into a non-grounded outlet. If you cannot insert the plug into the outlet, contact an electrician for an approved outlet adapter or to replace the outlet with one that enables this safety feature. Never overload an electrical outlet. The overall system load should not exceed 80 percent of the branch circuit rating. Consult an electrician for more information if you have questions about power loads and branch circuit ratings.

Be sure that the power outlet you are using is properly wired, easily accessible, and located close to the equipment. Do not fully extend power cords in a way that will stress the cords.

Be sure that the power outlet provides the correct voltage and current for the product you are installing.

Carefully connect and disconnect the equipment from the electrical outlet.

Power supply statement

Never remove the cover on a power supply or any part that has the following label attached.



Hazardous voltage, current, and energy levels are present inside any component that has this label attached. There are no serviceable parts inside these components. If you suspect a problem with one of these parts, contact a service technician.

External devices

CAUTION:
Do not connect or disconnect any external device cables other than Universal Serial Bus (USB) and 1394 cables while the computer power is on; otherwise, you might damage your computer. To avoid possible damage to attached devices, wait at least five seconds after the computer is shut down to disconnect external devices.

Lithium coin-cell battery notice

DANGER

Danger of explosion if battery is incorrectly replaced.

If the coin-cell battery is not a CRU, do not attempt to replace the coin-cell battery. Replacement of the battery must be done by a Lenovo-authorized repair facility or technician.

The Lenovo-authorized repair facilities or technicians recycle Lenovo batteries according to local laws and regulations.

When replacing the lithium coin-cell battery, use only the same type or equivalent type that is recommended by the manufacturer. The battery contains lithium and can explode if not properly used, handled, or disposed of. Swallowing the lithium coin-cell battery will cause chocking or severe internal burns in just two hours and might even result in death.

Keep batteries away from children. If the lithium coin-cell battery is swallowed or placed inside any part of the body, seek medical care immediately.

Do not:

- Throw or immerse into water
- Heat to more than 100 °C (212°F)
- Repair or disassemble
- Leave in an extremely low air pressure environment
- Leave in an extremely high-temperature environment
- Crush, puncture, cut, or incinerate

Dispose of the battery as required by local ordinances or regulations.

The following statement applies to users in the state of California, U.S.A.

California Perchlorate Information:

Products containing manganese dioxide lithium coin-cell batteries may contain perchlorate.

Perchlorate Material - special handling may apply, see https://www.dtsc.ca.gov/hazardouswaste/perchlorate/.

Heat and product ventilation

Computers, power adapters, and many accessories can generate heat when turned on and when batteries are charging. Always follow these basic precautions:

- Do not leave your computer, power adapter, or accessories in contact with your lap or any part of your body for an extended period when the products are functioning or when the battery is charging. Your

computer, power adapter, and many accessories produce some heat during normal operation. Extended contact with the body could cause discomfort or, potentially, a skin burn.

- Do not charge the battery or operate your computer, power adapter, or accessories near flammable materials or in explosive environments.
- Ventilation slots, fans, and heat sinks are provided with the product for safety, comfort, and reliable operation. These features might inadvertently become blocked by placing the product on a bed, sofa, carpet, or other flexible surface. Never block, cover, or disable these features.

Inspect your desktop computer for dust accumulation at least once every three months. Before inspecting your computer, turn off the power and unplug the computer's power cord from the electrical outlet; then remove any dust from vents and perforations in the bezel. If you notice external dust accumulation, then examine and remove dust from the inside of the computer including heat sink inlet fins, power supply vents, and fans. Always turn off and unplug the computer before opening the cover. If possible, avoid operating your computer within two feet of high-traffic areas. If you must operate your computer in or near a high-traffic area, inspect and, if necessary, clean your computer more frequently.

For your safety and to maintain optimum computer performance, always follow these basic precautions with your desktop computer:

- Keep the cover closed whenever the computer is plugged in.
- Regularly inspect the outside of the computer for dust accumulation.
- Remove dust from vents and any perforations in the bezel. More frequent cleanings might be required for computers in dusty or high-traffic areas.
- Do not restrict or block any ventilation openings.
- Do not store or operate your computer inside furniture, as this might increase the risk of overheating.
- Airflow temperatures into the computer should not exceed 35°C (95°F).
- Do not install air filtration devices. They may interfere with proper cooling.

Electrical current safety information



DANGER

Electric current from power, telephone, and communication cables is hazardous.

To avoid a shock hazard:

- **Do not use your computer during a lightning storm.**
- **Do not connect or disconnect any cables or perform installation, maintenance, or reconfiguration of this product during an electrical storm.**
- **Connect all power cords to a properly wired and grounded electrical outlet.**
- **Connect properly wired outlets to any equipment that will be attached to this product.**
- **Whenever possible, use one hand only to connect or disconnect signal cables.**
- **Never turn on any equipment when there is evidence of fire, water, or structural damage.**
- **Disconnect the attached power cords, battery, and all the cables before you open the device covers, unless instructed otherwise in the installation and configuration procedures.**
- **Do not use your computer until all internal parts enclosures are fastened into place. Never use the computer when internal parts and circuits are exposed.**

DANGER

Connect and disconnect cables as described in the following procedures when installing, moving, or opening covers on this product or attached devices.

To connect:

1. **Turn everything OFF.**
2. **First, attach all cables to devices.**
3. **Attach signal cables to connectors.**
4. **Attach power cords to outlets.**
5. **Turn devices ON.**

To disconnect:

1. **Turn everything OFF.**
2. **First, remove power cords from outlets.**
3. **Remove signal cables from connectors.**
4. **Remove all cables from devices.**

The power cord must be disconnected from the wall outlet or receptacle before installing all other electrical cables connected to the computer.

The power cord may be reconnected to the wall outlet or receptacle only after all other electrical cables have been connected to the computer.

DANGER

During electrical storms, do not perform any replacement and do not connect the telephone cable to or disconnect it from the telephone outlet on the wall.

Laser safety information

CAUTION:
When laser products (such as CD-ROMs, DVD drives, fiber optic devices, or transmitters) are installed, note the following:

- **Do not remove the covers. Removing the covers of the laser product could result in exposure to hazardous laser radiation. There are no serviceable parts inside the device.**
- **Use of controls or adjustments or performance of procedures other than those specified herein might result in hazardous radiation exposure.**

DANGER

Some laser products contain an embedded Class 3B laser diode. Note the following:
Laser radiation when open. Do not stare into the beam, do not view directly with optical instruments, and avoid direct exposure to the beam.

Liquid crystal display (LCD) notice

DANGER

To avoid shock hazards:

- **Do not remove the covers.**
- **Do not operate this product unless the stand is attached.**
- **Do not connect or disconnect this product during an electrical storm.**
- **The power cord plug must be connected to a properly wired and grounded power outlet.**
- **Any equipment to which this product will be attached must also be connected to properly wired and grounded power outlets.**
- **To isolate the monitor from the electrical supply, you must remove the plug from the power outlet. The power outlet should be easily accessible.**

Handling:

- If your monitor weighs more than 18 kg (39.68 lb), we recommend that it be moved or lifted by two people.

Product disposal (TFT monitors):

- The fluorescent lamp in the liquid crystal display contains mercury; dispose according to local, state, or federal laws.

Battery warnings:

- Risk of explosion if battery is replaced by an incorrect type.
- Dispose of used batteries according to the instructions.

Use earphones, headphones, or a headset

- If your computer has both a headphone connector and an audio line-out connector, always use the headphone connector for earphones, headphones, or a headset. However, the headphone connector does not support the microphone of the headset.
- If your computer has both a headset connector and an audio line-out connector, always use the headset connector for earphones, headphones, or a headset.



Excessive sound pressure from earphones and headphones can cause hearing loss. Adjustment of the equalizer to maximum increases the earphone and headphone output voltage and the sound pressure level. Therefore, to protect your hearing, adjust the equalizer to an appropriate level.

Excessive use of headphones or earphones for a long period of time at high volume can be dangerous if the output of the headphone or earphone connectors do not comply with specifications of EN 50332-2. The headphone output connector of your computer complies with EN 50332-2 Sub clause 7. This specification limits the computer's maximum wide band true RMS output voltage to 150 mV. To help protect against hearing loss, ensure that the headphones or earphones you use also comply with EN 50332-2 (Clause 7

Limits) or a wide band characteristic voltage of 75 mV. Using headphones that do not comply with EN 50332-2 can be dangerous due to excessive sound pressure levels.

If your Lenovo computer came with headphones or earphones in the packaging, as a set, the combination of the headphones or earphones and the computer already complies with the specifications of EN 50332-1. If different headphones or earphones are used, ensure that they comply with EN 50332-1 (Clause 6.5 Limitation Values). Using headphones that do not comply with EN 50332-1 can be dangerous due to excessive sound pressure levels.

Choking hazard notice



CHOKING HAZARD – Product contains small parts.

Keep away from children under three years.

Plastic bag notice

DANGER

Plastic bags can be dangerous. Keep plastic bags away from babies and children to avoid danger of suffocation.

Glass parts notice

CAUTION:
Some parts of your product may be made of glass. This glass could break if the product is dropped on a hard surface or receives a substantial impact. If glass breaks, do not touch or attempt to remove it. Stop using your product until the glass is replaced by trained service personnel.

Computer placement notices

Inappropriate computer placement might cause harm to children.

- Place the computer on a sturdy piece of low-rise furniture or furniture that has been anchored.
- Do not place the computer at the edge of the furniture.
- Keep the computer cables out of the reach of children.
- Some items, such as toys, might attract children. Keep such items away from the computer.

Supervise children in rooms where the above safety instructions cannot be fully implemented.

Hazardous energy statement

DANGER

Disconnect all power cords from electrical outlets before removing the computer cover or any part that has the above label attached.

DO NOT disassemble components that have the above label attached. There are no serviceable parts inside these components.

Your product is designed for safe use. However, hazardous voltage, current, and energy levels are present inside any component that has this label attached. Disassembling of these components might cause fire or might even result in death. If you suspect a problem with one of these parts, contact a service technician.

CAUTION:



Bright Light, possible skin or eye damage. Disconnect power before servicing.

CAUTION:



Infrared Light, possible skin or eye damage. Disconnect power before servicing.

Eye comfort

The property of the display in combination with following notes result in reduced eye fatigue and increased comfort.

For tips on how to minimize visual fatigue, please go to https://www.lenovo.com/us/en/safecomp/ to visit “Minimizing Visual Fatigue”.

Tip-over hazard prevention notice

The computer may cause harm to children if it is not located in an appropriate place. Follow the tips below to protect children from harm caused by the computer tipping over:

- Place the computers or monitors on sturdy furniture with a low base or furniture that has been anchored. Push the computers or monitors as far from the edge of the furniture as possible.
- Keep remote controls, toys, and other items that might attract children away from the computers or monitors
- Keep the computer or monitor cables out the reach of the children.
- Supervise children in rooms where these safety tips have not been followed.

CAUTION:
Some parts of your product may be made of glass. This glass could break if the product is dropped on a hard surface or receives a substantial impact. If glass breaks, do not touch it or attempt to remove it. Stop using your product until the glass is replaced by trained service personnel.

Static electricity prevention

Static electricity, although harmless to you, can seriously damage computer components and options. Improper handling of static-sensitive parts can damage the part. When you unpack an option or CRU, do not open the static-protective packaging containing the part until the instructions direct you to install it.

When you handle options or CRUs, or perform any work inside the computer, take the following precautions to avoid static-electricity damage:

- Limit your movement. Movement can cause static electricity to build up around you.
- Always handle components carefully. Handle adapters, memory modules, and other circuit boards by the edges. Never touch exposed circuitry.
- Prevent others from touching components.
- When you install a static-sensitive option or CRU, touch the static-protective packaging containing the part to a metal expansion-slot cover or other unpainted metal surface on the computer for at least two seconds. This reduces static electricity in the packaging and your body.
- When possible, remove the static-sensitive part from the static-protective packaging and install the part without setting it down. When this is not possible, place the static-protective packaging on a smooth, level surface and place the part on it.
- Do not place the part on the computer cover or other metal surface.

Operating environment

Maximum altitude (without pressurization)

- Operating: From -15.2 m (-50 ft) to 3048 m (10 000 ft)
- Storage: From -15.2 m (-50 ft) to 10 668 m (35 000 ft)

Temperature

- Operating: From 10°C (50°F) to 35°C (95°F)
- Storage without package: From -10°C (14°F) to 60°C (140°F)

Note: If your computer is stored or transported in temperatures less than 10°C (50°F), allow the computer to rise slowly to an optimal operating temperature before use. This process might take up to two hours. Using the computer in a lower operating temperature might result in irreparable damage to your computer.

Relative humidity

- Operating: 10%-80% (non-condensing)
- Storage: 10%–90% (non-condensing)

Cleaning and maintenance

With appropriate care and maintenance, your computer will serve you reliably. The following topics offer information to help you keep your computer working with best performance.

Basic maintenance tips

Here are some basic points about keeping your computer functioning properly:

- Keep the computer in a clean, dry environment. Ensure that the computer rests on a flat, steady surface.
- Do not cover any of air vents. These air vents provide airflow to keep the computer from overheating.

- Keep electrical appliances such as an electric fan, radio, high-powered speakers, air conditioner, and microwave oven away from your computer because the strong magnetic fields generated by these appliances can damage the monitor and data on the storage drive.
- Keep food and drinks away from all parts of the computer. Food particles and spills might make the keyboard and mouse stick and unusable.
- Do not get the power switches or other controls wet. Moisture can damage these parts and cause an electrical hazard.
- Always disconnect a power cord by grasping the plug instead of the cord.
- Keep the computer software, device drivers, and operating system up-to-date.
- Empty your recycle bin on a regular basis.
- Clean out your Inbox, Sent Items, and Deleted Items folders in your e-mail application on a regular basis.
- Clean up files and free up storage drive space and memory space occasionally to prevent performance problems.
- Keep a log book. Entries might include major software or hardware changes, device-driver updates, intermittent problems and what you did to resolve them, and other issues you might have experienced. The cause of a problem might be change in hardware, change in software, or any other actions that might have taken place. A log book can help you or a Lenovo technician determine the cause of a problem.
- Back up your data on the storage drive regularly. You can restore the storage drive from a backup.
- Get the most up-to-date operating system update patches, software programs, and device drivers.

Maintenance tips about moving the computer

Before moving the computer, take the following precautions:

1. Back up your data on the storage drive.
2. Remove any media from the drives and turn off all connected devices and the computer. Then, disconnect all power cords from electrical outlets and disconnect all cables that are connected to the computer.
3. If you saved the original shipping cartons and packing materials, use them to pack the units. If you are using different cartons, cushion the units to avoid damage.

When you move the computer to another country or region, you must take local electrical standards into consideration. If the local electrical outlet style is different from the type you are currently using, contact the Lenovo Customer Support Center to purchase either an electrical plug adapter or a new power cord.

Clean your computer

CAUTION:
Remove any media from the drives and turn off all connected devices and the computer. Then, disconnect all power cords from electrical outlets and disconnect all cables that are connected to the computer.

It is a good practice to clean your computer periodically to protect the surfaces and ensure trouble-free operation.

Clean the computer surface: Wipe it with a lint-free cloth dampened in mild soap and water. Avoid applying liquids directly to the surface.

Clean the keyboard: Wipe the keys one by one with a lint-free cloth dampened in mild soap and water. If you wipe several keys at a time, the cloth might hook onto an adjacent key and possibly damage it. Avoid spraying cleaner directly onto the keyboard. To remove any crumbs or dust from beneath the keys, you can use a camera blower with a brush or use cool air from a hair dryer.

Clean the computer screen: Scratches, oil, dust, chemicals, and ultraviolet light can affect the performance of your computer screen. Use a dry, soft lint-free cloth to wipe the screen gently. If you see a scratchlike mark on your screen, it might be a stain. Wipe or dust the stain gently with a soft, dry cloth. If the stain remains, moisten a soft, lint-free cloth with water or eyeglass cleaner, but do not apply liquids directly to your computer screen. Ensure that the computer screen is dry before closing it.

Appendix C. Accessibility and ergonomic information

This chapter provides information about accessibility and ergonomics.

Accessibility information

Lenovo is committed to providing users who have hearing, vision, and mobility limitations with greater access to information and technology. This section provides information about the ways these users can get the most out of their computer experience. You also can get the most up-to-date accessibility information from the following Web site:
https://www.lenovo.com/accessibility

Universal Access

Universal Access on the Ubuntu operating system enables you to configure your computers to suit your physical and cognitive needs.

To access the **Universal Access** menu:

1. Open the system menu from the top-right corner and click **Settings → Universal Access**.
2. Choose the appropriate tool by following the on-screen instructions.

Screen resolution

You can make the text and images on your screen easier to read by adjusting the screen resolution of your computer.

To adjust the screen resolution:

1. Go to **Settings → Devices → Displays**.
2. Follow the on-screen instructions.

Note: Setting a resolution too low might prevent some items from fitting on the screen.

Industry-standard connectors

Your computer provides industry-standard connectors that enable you to connect assistive devices.

Documentation in accessible formats

Lenovo provides electronic documentation in accessible formats, such as properly tagged PDF files or HyperText Markup Language (HTML) files. Lenovo electronic documentation is developed to ensure that visually impaired users can read the documentation through a screen reader. Each image in the documentation also includes adequate alternative text so that visually impaired users can understand the image when they use a screen reader.

Ergonomic information

Good ergonomic practice is important to get the most from your personal computer and to avoid discomfort. Arrange your workplace and the equipment you use to suit your individual needs and the kind of work that you perform. In addition, use healthy work habits to maximize your performance and comfort when using your computer.

© Copyright Lenovo 2020

Working in the virtual office might mean adapting to frequent changes in your environment. Adapting to the surrounding light sources, active seating, and the placement of your computer hardware, can help you improve your performance and achieve greater comfort.

This example shows someone in a conventional setting. Even when not in such a setting, you can follow many of these tips. Develop good habits, and they will serve you well.



General posture: Make minor modifications in your working posture to deter the onset of discomfort caused by long periods of working in the same position. Frequent short breaks from your work also help to prevent minor discomfort associated with your working posture.

Display: Position the display to maintain a comfortable viewing distance of 510 mm to 760 mm (20 inches to 30 inches). Avoid glare or reflections on the display from overhead lighting or outside sources of light. Keep the display screen clean and set the brightness to levels that enable you to see the screen clearly. Press the brightness control keys to adjust display brightness.

Head position: Keep your head and neck in a comfortable and neutral (vertical, or upright) position.

Chair: Use a chair that gives you good back support and seat height adjustment. Use chair adjustments to best suit your comfort posture.

Arm and hand position: If available, use chair arm rests or an area on your working surface to provide weight support for your arms. Keep your forearms, wrists, and hands in a relaxed and neutral (horizontal) position. Type with a soft touch without pounding the keys.

Leg position: Keep your thighs parallel to the floor and your feet flat on the floor or on a footrest.

Appendix D. Compliance and TCO Certified information

This chapter provides regulatory, environmental, RoHS, and ENERGY STAR information about Lenovo products.

Radio frequency compliance statements

Computer models equipped with wireless communications comply with the radio frequency and safety standards of any country or region in which it has been approved for wireless use.

Besides this document, ensure that you read the *Regulatory Notice* for your country or region before using the wireless devices contained in your computer.

Locate wireless regulatory notices

For more information about the wireless regulatory notices, refer to the *Regulatory Notice* at: https://pcsupport.lenovo.com

European Union-compliance with the Radio Equipment Directive

- **For computer models with wireless radio devices:**

  This product is in conformity with all the requirements and essential norms that apply to EU Council Radio Equipment Directive 2014/53/EU on the approximation of the laws of the Member States relating to radio equipment. The full text of the system EU declaration of conformity is available at: https://www.lenovo.com/us/en/compliance/eu-doc

  Lenovo cannot accept responsibility for any failure to satisfy the protection requirements resulting from a non-recommended modification of the product, including the installation of option cards from other manufacturers. This product has been tested and found to comply with the limits for Class B equipment according to European Standards harmonized in the Directives in compliance. The limits for Class B equipment were derived for typical residential environments to provide reasonable protection against interference with licensed communication devices.

- **For computer models without wireless radio devices:**

  The full text of the system EU declaration of conformity is available at: https://www.lenovo.com/us/en/compliance/eu-doc

  Lenovo cannot accept responsibility for any failure to satisfy the protection requirements resulting from a non-recommended modification of the product, including the installation of option cards from other manufacturers. This product has been tested and found to comply with the limits for Class B equipment according to European Standards harmonized in the Directives in compliance. The limits for Class B equipment were derived for typical residential environments to provide reasonable protection against interference with licensed communication devices.

Brazil

Este equipamento não tem direito à proteção contra interferência prejudicial e não pode causar interferência em sistemas devidamente autorizados.

This equipment is not protected against harmful interference and may not cause interference with duly authorized systems.

© Copyright Lenovo 2020

Mexico

Advertencia: En Mexico la operación de este equipo está sujeta a las siguientes dos condiciones: (1) es posible que este equipo o dispositivo no cause interferencia perjudicial y (2) este equipo o dispositivo debe aceptar cualquier interferencia, incluyendo la que pueda causar su operación no deseada.

Singapore

Complies with
IMDA Standards
DB102306

Korea

무선설비 전파 혼신 **(사용주파수 2400~2483.5 , 5725~5825 무선제품해당)**

해당 무선설비가 전파혼신 가능성이 있으므로 인명안전과 관련된 서비스는 할 수 없음

SAR 정보

본 장치는 전파 노출에 대한 가이드라인을 충족합니다.

본 장치는 무선 송수신기 입니다. 본 장치는 국제 가이드라인으로 권장되는 전파 노출에 대한 제한을 초과하지 않도록 설계되었습니다. 장치 액세서리 및 최신 부품을 사용할 경우 SAR 값이 달라질 수 있 습니다. SAR 값은 국가 보고 및 테스트 요구 사항과 네트워크 대역에 따라 다를 수 있습니다. 본 장치 는 사람의 신체에서 20mm 이상의 거리에서 사용할 수 있습니다.

Environmental information of countries and regions

This section provides environmental, recycling, and RoHS information about Lenovo products.

Recycling and environmental information

Lenovo encourages owners of information technology (IT) equipment to responsibly recycle their equipment when it is no longer needed. Lenovo offers a variety of programs and services to assist equipment owners in recycling their IT products. For information about recycling Lenovo products, go to:
https://www.lenovo.com/us/en/compliance/recycling

The latest environmental information about our products is available at:
https://www.lenovo.com/us/en/compliance/eco-declaration

Important WEEE information



The WEEE marking on Lenovo products applies to countries with WEEE and e-waste regulations (for example, the European WEEE Directive, India E-Waste Management Rules). Appliances are labeled in accordance with local regulations concerning waste electrical and electronic equipment (WEEE). These regulations determine the framework for the return and recycling of used appliances as applicable within

each geography. This label is applied to various products to indicate that the product is not to be thrown away, but rather put in the established collection systems for reclaiming these end of life products.

Users of electrical and electronic equipment (EEE) with the WEEE marking must not dispose of end of life EEE as unsorted municipal waste, but use the collection framework available to them for the return, recycle, and recovery of WEEE and to minimize any potential effects of EEE on the environment and human health due to the presence of hazardous substances. Lenovo electrical and electronic equipment (EEE) may contain parts and components, which at end-of-life might qualify as hazardous waste.

EEE and waste electrical and electronic equipment (WEEE) can be delivered free of charge to the place of sale or any distributor that sells electrical and electronic equipment of the same nature and function as the used EEE or WEEE.

For additional WEEE information, go to:
https://www.lenovo.com/us/en/compliance/recycling

WEEE information for Hungary

Lenovo, as a producer, bears the cost incurred in connection with the fulfillment of Lenovo's obligations under Hungary Law No. 197/2014 (VIII.1.) subsections (1)-(5) of section 12.

Japan recycling statements

Collect and recycle a disused Lenovo computer or monitor

If you are a company employee and need to dispose of a Lenovo computer or monitor that is the property of the company, you must do so in accordance with the Law for Promotion of Effective Utilization of Resources. Computers and monitors are categorized as industrial waste and should be properly disposed of by an industrial waste disposal contractor certified by a local government. In accordance with the Law for Promotion of Effective Utilization of Resources, Lenovo Japan provides, through its PC Collecting and Recycling Services, for the collecting, reuse, and recycling of disused computers and monitors. For details, visit the Lenovo Web site at:
https://www.lenovo.com/us/en/social_responsibility/sustainability/ptb_japan

Pursuant to the Law for Promotion of Effective Utilization of Resources, the collecting and recycling of home-used computers and monitors by the manufacturer was begun on October 1, 2003. This service is provided free of charge for home-used computers sold after October 1, 2003. For details, go to:
https://www.lenovo.com/us/en/social_responsibility/sustainability/ptb_japan

Dispose of Lenovo computer components

Some Lenovo computer products sold in Japan may have components that contain heavy metals or other environmental sensitive substances. To properly dispose of disused components, such as a printed circuit board or drive, use the methods described above for collecting and recycling a disused computer or monitor.

Dispose of disused lithium batteries from Lenovo computers

A button-shaped lithium battery is installed inside your Lenovo computer to provide power to the computer clock while the computer is off or disconnected from the main power source. If you need to replace it with a new one, contact your place of purchase or contact Lenovo for service. If you need to dispose of a disused lithium battery, insulate it with vinyl tape, contact your place of purchase or an industrial-waste-disposal operator, and follow their instructions.

Disposal of a lithium battery must comply with local ordinances and regulations.

Brazil recycling information

Declarações de Reciclagem no Brasil

Descarte de um Produto Lenovo Fora de Uso

Equipamentos elétricos e eletrônicos não devem ser descartados em lixo comum, mas enviados à pontos de coleta, autorizados pelo fabricante do produto para que sejam encaminhados e processados por empresas especializadas no manuseio de resíduos industriais, devidamente certificadas pelos orgãos ambientais, de acordo com a legislação local.

A Lenovo possui um canal específico para auxiliá-lo no descarte desses produtos. Caso você possua um produto Lenovo em situação de descarte, ligue para o nosso SAC ou encaminhe um e-mail para: reciclar@lenovo.com, informando o modelo, número de série e cidade, a fim de enviarmos as instruções para o correto descarte do seu produto Lenovo.

Battery recycling information for the European Union



Notice: This mark applies only to countries within the European Union (EU).

Batteries or packaging for batteries are labeled in accordance with European Directive 2006/66/EC concerning batteries and accumulators and waste batteries and accumulators. The Directive determines the framework for the return and recycling of used batteries and accumulators as applicable throughout the European Union. This label is applied to various batteries to indicate that the battery is not to be thrown away, but rather reclaimed upon end of life per this Directive.

In accordance with the European Directive 2006/66/EC, batteries and accumulators are labeled to indicate that they are to be collected separately and recycled at end of life. The label on the battery may also include a chemical symbol for the metal concerned in the battery (Pb for lead, Hg for mercury, and Cd for cadmium). Users of batteries and accumulators must not dispose of batteries and accumulators as unsorted municipal waste, but use the collection framework available to customers for the return, recycling, and treatment of batteries and accumulators. Customer participation is important to minimize any potential effects of batteries and accumulators on the environment and human health due to the potential presence of hazardous substances.

Before placing electrical and electronic equipment (EEE) in the waste collection stream or in waste collection facilities, the end user of equipment containing batteries and/or accumulators must remove those batteries and accumulators for separate collection.

Disposing of lithium batteries and battery packs from Lenovo products

A coin-cell type lithium battery might be installed inside your Lenovo product. You can find details about the battery in the product documentation. If the battery needs to be replaced, contact your place of purchase or contact Lenovo for service. If you need to dispose of a lithium battery, insulate it with vinyl tape, contact your place of purchase or a waste-disposal operator, and follow their instructions.

Disposing of battery packs from Lenovo products

Your Lenovo device might contain a lithium-ion battery pack or a nickel metal hydride battery pack. You can find details on the battery pack in the product documentation. If you need to dispose of a battery pack, insulate it with vinyl tape, contact Lenovo sales, service, or your place of purchase, or a waste-disposal operator, and follow their instructions. You also can refer to the instructions provided in the user guide for your product.

For proper collection and treatment, go to:
https://www.lenovo.com/lenovo/environment

Recycling information for mainland China

《废弃电器电子产品回收处理管理条例》提示性说明

联想鼓励拥有联想品牌产品的用户当不再需要此类产品时，遵守国家废弃电器电子产品回收处理相关法律法规，将其交给当地具有国家认可的回收处理资质的厂商进行回收处理。更多回收服务信息，请点击进入http://support.lenovo.com.cn/activity/551.htm

Battery recycling information for Taiwan



廢電池請回收

Restriction of Hazardous Substances (RoHS) Directive of countries and regions

The latest environmental information about Lenovo products is available at:
https://www.lenovo.com/ecodeclaration

European Union RoHS

This Lenovo product, with included parts (cables, cords, and so on) meets the requirements of Directive 2011/65/EU on the restriction of the use of certain hazardous substances in electrical and electronic equipment ("RoHS recast" or "RoHS 2").

For more information about Lenovo worldwide compliance on RoHS, go to:
https://www.lenovo.com/rohs-communication

Turkish WEEE / RoHS

Türkiye AEEE Yönetmeliğine Uygunluk Beyanı

Bu Lenovo ürünü, T.C. Çevre ve Orman Bakanlığı'nın "Atık Elektrik ve Elektronik Eşyalarda Bazı Zararlı Maddelerin Kullanımının Sınırlandırılmasına Dair Yönetmelik (AEEE)" direktiflerine uygundur.

AEEE Yönetmeliğine Uygundur.

Ukraine RoHS

Цим підтверджуємо, що продукція Леново відповідає вимогам нормативних актів України, які обмежують вміст небезпечних речовин

India RoHS

RoHS compliant as per E-Waste (Management) Rules.

Mainland China RoHS

产品中有害物质的名称及含量

部件名称	有害物质					
	铅(Pb)	汞(Hg)	镉(Cd)	六价铬 (Cr(VI))	多溴连苯 (PBB)	多溴二苯醚 (PBDE)
印刷电路板组件*	X	O	O	O	O	O
硬盘	X	O	O	O	O	O
光驱	X	O	O	O	O	O
内存	X	O	O	O	O	O
电脑I/O 附件	X	O	O	O	O	O
电源	X	O	O	O	O	O
键盘	X	O	O	O	O	O
鼠标	X	O	O	O	O	O
机箱/ 附件	X	O	O	O	O	O
电池	X	O	O	O	O	O

本表格依据 SJ/T 11364 的规定编制。
O：表示该有害物质在该部件所有均质材料中的含量均在 GB/T 26572 规定的限量要求以下。
×：表示该有害物质至少在该部件的某一均质材料中的含量超出 GB/T 26572 规定的限量要求。
注：表中标记“×”的部件，皆因全球技术发展水平限制而无法实现有害物质的替代。
印刷电路板组件*：包括印刷电路板及其零部件、电容和连接器
根据型号的不同，可能不会含有以上的所有部件，请以实际购买机型为准



在中华人民共和国境内销售的电子信息产品必须标识此标志，标志内的数字代表在正常使用状态下的产品的环保使用期限

Taiwan RoHS

單元	限用物質及其化學符號					
	鉛 (Pb)	汞 (Hg)	鎘 (Cd)	六價鉻 (Cr^{+6})	多溴聯苯 (PBB)	多溴二苯醚 (PBDE)
印刷電路板組件	—	○	○	○	○	○
硬碟	—	○	○	○	○	○
光碟機(選配件)	—	○	○	○	○	○
記憶體	—	○	○	○	○	○
電源供應器	—	○	○	○	○	○
鍵盤(選配件)	—	○	○	○	○	○
滑鼠(選配件)	—	○	○	○	○	○
機殼	—	○	○	○	○	○
配件（電源線）	—	○	○	○	○	○
散熱模組	—	○	○	○	○	○

備考1.〝超出0.1 wt %〞及〝超出0.01 wt %〞係指限用物質之百分比含量超出百分比含量基準值。

備考2.〝○〞係指該項限用物質之百分比含量未超出百分比含量基準值。

備考3.〝—〞係指該項限用物質為排除項目。

Electromagnetic emission notices

Federal Communications Commission (FCC) Supplier's Declaration of Conformity

The following information refers to ThinkStation P330, machine types: 30CY, 30D0, and 30D3.

This equipment has been tested and found to comply with the limits for a Class B digital device, pursuant to Part 15 of the FCC Rules. These limits are designed to provide reasonable protection against harmful interference in a residential installation. This equipment generates, uses, and can radiate radio frequency energy and, if not installed and used in accordance with the instructions, may cause harmful interference to radio communications. However, there is no guarantee that interference will not occur in a particular installation. If this equipment does cause harmful interference to radio or television reception, which can be determined by turning the equipment off and on, the user is encouraged to try to correct the interference by one or more of the following measures:

- Reorient or relocate the receiving antenna.
- Increase the separation between the equipment and receiver.
- Connect the equipment into an outlet on a circuit different from that to which the receiver is connected.
- Consult an authorized dealer or service representative for help.

Lenovo is not responsible for any radio or television interference caused by using other than recommended cables and connectors or by unauthorized changes or modifications to this equipment. Unauthorized changes or modifications could void the user's authority to operate the equipment.

This device complies with Part 15 of the FCC Rules. Operation is subject to the following two conditions: (1) this device may not cause harmful interference, and (2) this device must accept any interference received, including interference that may cause undesired operation.

Responsible Party:
Lenovo (United States) Incorporated
7001 Development Drive
Morrisville, NC 27560
Email: FCC@lenovo.com

Industry Canada compliance statement

CAN ICES-3(B)/NMB-3(B)

European Union conformity

EU Contact: Lenovo (Slovakia), Landererova 12, 811 09 Bratislava, Slovakia

Compliance with the EMC Directive

This product is in conformity with the protection requirements of EU Council Directive 2014/30/EU on the approximation of the laws of the Member States relating to electromagnetic compatibility.

This product has been tested and found to comply with the limits for Class B equipment according to European Standards harmonized in the Directives in compliance. The Class B requirements for equipment are intended to offer adequate protection to broadcast services within residential environments.

EU ErP (EcoDesign) Directive (2009/125/EC) - external power adapters (Regulation (EU) 2019/1782)

Lenovo products are designed to work with a range of compatible power adapters. Access https://www.lenovo.com/us/en/compliance/eu-doc to view the compatible power adapters. For the detailed power adapter specifications for your computer, go to https://support.lenovo.com.

German Class B compliance statement

Hinweis zur Einhaltung der Klasse B zur elektromagnetischen Verträglichkeit

Dieses Produkt entspricht den Schutzanforderungen der EU-Richtlinie zur elektromagnetischen Verträglichkeit Angleichung der Rechtsvorschriften über die elektromagnetische Verträglichkeit in den EU-Mitgliedsstaaten und hält die Grenzwerte der Klasse B der Norm gemäß Richtlinie.

Um dieses sicherzustellen, sind die Geräte wie in den Handbüchern beschrieben zu installieren und zu betreiben. Des Weiteren dürfen auch nur von der Lenovo empfohlene Kabel angeschlossen werden. Lenovo übernimmt keine Verantwortung für die Einhaltung der Schutzanforderungen, wenn das Produkt ohne Zustimmung der Lenovo verändert bzw. wenn Erweiterungskomponenten von Fremdherstellern ohne Empfehlung der Lenovo gesteckt/eingebaut werden.

Zulassungsbescheinigung laut dem Deutschen Gesetz über die elektromagnetische Verträglichkeit von Betriebsmitteln, EMVG vom 20. Juli 2007 (früher Gesetz über die elektromagnetische Verträglichkeit von Geräten), bzw. der EU Richtlinie 2014/30/EU, der EU Richtlinie 2014/53/EU Artikel 3.1b), für Geräte der Klasse B.

Dieses Gerät ist berechtigt, in Übereinstimmung mit dem Deutschen EMVG das EG-Konformitätszeichen - CE - zu führen. Verantwortlich für die Konformitätserklärung nach Paragraf 5 des EMVG ist die Lenovo (Deutschland) GmbH, Meitnerstr. 9, D-70563 Stuttgart.

Japan VCCI Class B compliance statement

この装置は、クラスB機器です。この装置は、住宅環境で使用することを目的としていますが、この装置がラジオやテレビジョン受信機に近接して使用されると、受信障害を引き起こすことがあります。
取扱説明書に従って正しい取り扱いをして下さい。

VCCI-B

Japan compliance statement for products which connect to the power mains with rated current less than or equal to 20 A per phase

日本の定格電流が 20A/相 以下の機器に対する高調波電流規制
高調波電流規格 JIS C 61000-3-2 適合品

Japan notice for ac power cord

The ac power cord shipped with your product can be used only for this specific product. Do not use the ac power cord for other devices.

本製品およびオプションに電源コード・セットが付属する場合は、
それぞれ専用のものになっていますので他の電気機器には使用し
ないでください。

Other compliance and TCO Certified information of countries and regions

This section provides other compliance information about Lenovo products.

Certification-related information

Product name: ThinkStation P330

Machine types: 30CY, 30D0, and 30D3

The latest compliance information is available at:
https://www.lenovo.com/us/en/compliance

TCO Certified

Selected models are TCO Certified and bear the TCO Certified logo.

Note: TCO Certified is an international third-party sustainability certification for IT products. For details, go to https://www.lenovo.com/us/en/compliance/tco.

Export classification notice

This product is subject to the United States Export Administration Regulations (EAR) and has an Export Classification Control Number (ECCN) of 5A992.c. It can be re-exported except to any of the embargoed countries in the EAR E1 country list.

Lenovo product service information for Taiwan

委製商/進口商名稱: 荷蘭商聯想股份有限公司台灣分公司
進口商地址: 台北市中山區樂群三路128號16樓
進口商電話: 0800-000-702 (代表號)

Taiwan precautionary vision statement

警語：使用過度恐傷害視力

注意事項：

- 使用30分鐘請休息10分鐘。
- 未滿2歲幼兒不看螢幕，2歲以上每天看螢幕不要超過1小時。

Keyboard and mouse compliance statement for Taiwan

本產品隨貨附已取得經濟部標準檢驗局認可之PS/2或USB的鍵盤與滑鼠一組

Eurasian compliance mark

EAC

Brazil audio notice

Ouvir sons com mais de 85 decibéis por longos períodos pode provocar danos ao sistema auditivo.

ENERGY STAR model information

ENERGY STAR is a joint program of the U.S. Environmental Protection Agency and the U.S. Department of Energy aimed at saving money and protecting the environment through energy efficient products and practices.

Lenovo is proud to offer products with the ENERGY STAR certified designation. Lenovo computers, if carry an ENERGY STAR mark, have been designed and tested to conform to the ENERGY STAR program requirements for computers as prescribed by the U.S. Environmental Protection Agency. For a certified computer, an ENERGY STAR mark may be affixed to the product, the product packaging, or displayed electronically on the E-label screen or the power settings interface.

By using ENERGY STAR compliant products and taking advantage of the power management features of your computer, you reduce the consumption of electricity. Reduced electrical consumption contributes to potential financial savings, a cleaner environment, and the reduction of greenhouse gas emissions. For more information about ENERGY STAR, go to https://www.energystar.gov.

Lenovo encourages you to make efficient use of energy an integral part of your day-to-day operations. To help in this endeavor, Lenovo has preset a default power plan. To change the power plan, see “Set the power plan” on page 11.

Appendix E. Notices and trademarks

Notices

Lenovo may not offer the products, services, or features discussed in this document in all countries. Consult your local Lenovo representative for information on the products and services currently available in your area. Any reference to a Lenovo product, program, or service is not intended to state or imply that only that Lenovo product, program, or service may be used. Any functionally equivalent product, program, or service that does not infringe any Lenovo intellectual property right may be used instead. However, it is the user's responsibility to evaluate and verify the operation of any other product, program, or service.

Lenovo may have patents or pending patent programs covering subject matter described in this document. The furnishing of this document does not give you any license to these patents. You can send license inquiries, in writing, to:

Lenovo (United States), Inc.
8001 Development Drive
Morrisville, NC 27560
U.S.A.
Attention: Lenovo Director of Licensing

LENOVO PROVIDES THIS PUBLICATION "AS IS" WITHOUT WARRANTY OF ANY KIND, EITHER EXPRESS OR IMPLIED, INCLUDING, BUT NOT LIMITED TO, THE IMPLIED WARRANTIES OF NON-INFRINGEMENT, MERCHANTABILITY OR FITNESS FOR A PARTICULAR PURPOSE. Some jurisdictions do not allow disclaimer of express or implied warranties in certain transactions, therefore, this statement may not apply to you.

Changes are made periodically to the information herein; these changes will be incorporated in new editions of the publication. To provide better service, Lenovo reserves the right to improve and/or modify the products and software programs described in the manuals included with your computer, and the content of the manual, at any time without additional notice.

The software interface and function and hardware configuration described in the manuals included with your computer might not match exactly the actual configuration of the computer that you purchase. For the configuration of the product, refer to the related contract (if any) or product packing list, or consult the distributor for the product sales. Lenovo may use or distribute any of the information you supply in any way it believes appropriate without incurring any obligation to you.

The products described in this document are not intended for use in implantation or other life support applications where malfunction may result in injury or death to persons. The information contained in this document does not affect or change Lenovo product specifications or warranties. Nothing in this document shall operate as an express or implied license or indemnity under the intellectual property rights of Lenovo or third parties. All information contained in this document was obtained in specific environments and is presented as an illustration. The result obtained in other operating environments may vary.

Lenovo may use or distribute any of the information you supply in any way it believes appropriate without incurring any obligation to you.

Any references in this publication to non-Lenovo Web sites are provided for convenience only and do not in any manner serve as an endorsement of those Web sites. The materials at those Web sites are not part of the materials for this Lenovo product, and use of those Web sites is at your own risk.

© Copyright Lenovo 2020

Any performance data contained herein was determined in a controlled environment. Therefore, the result obtained in other operating environments may vary significantly. Some measurements may have been made on development-level systems and there is no guarantee that these measurements will be the same on generally available systems. Furthermore, some measurements may have been estimated through extrapolation. Actual results may vary. Users of this document should verify the applicable data for their specific environment.

This document is copyrighted by Lenovo and is not covered by any open source license, including any Linux agreement(s) which may accompany software included with this product. Lenovo may update this document at any time without notice.

For the latest information or any questions or comments, contact or visit the Lenovo Web site:
https://pcsupport.lenovo.com

Trademarks

LENOVO, LENOVO logo, THINKSTATION, and THINKSTATION logo are trademarks of Lenovo. Intel, Optane, and Core are trademarks of Intel Corporation or its subsidiaries in the U.S. and/or other countries. Windows is a trademark of the Microsoft group of companies. DisplayPort is a trademark of the Video Electronics Standards Association. The terms HDMI and HDMI High-Definition Multimedia Interface are trademarks or registered trademarks of HDMI Licensing LLC in the United States and other countries. Wi-Fi and Wi-Fi Alliance are registered trademarks of Wi-Fi Alliance. USB-C is a trademark of USB Implementers Forum. All other trademarks are the property of their respective owners. © 2020 Lenovo.


Lenovo