ThinkStation®

P520c User Guide

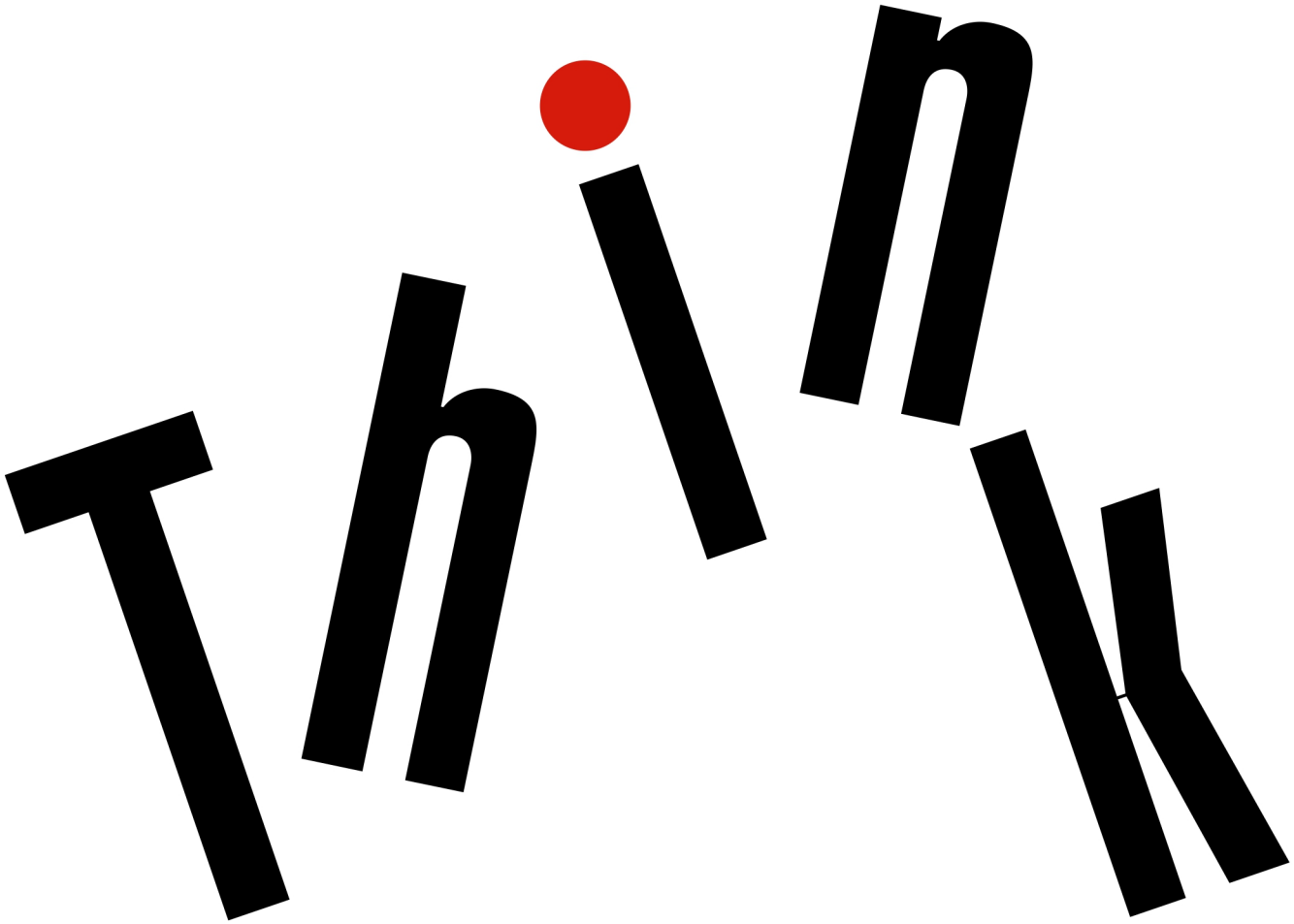

Lenovo

Machine Types: 30BY, 30BX, and 30C0

Note: Before using this information and the product it supports, be sure to read and understand the “Read this first: Important safety information” on page iii and Appendix G “Notices” on page 127.

Fifth Edition (March 2023)

© Copyright Lenovo 2020, 2023.

LIMITED AND RESTRICTED RIGHTS NOTICE: If data or software is delivered pursuant to a General Services Administration “GSA” contract, use, reproduction, or disclosure is subject to restrictions set forth in Contract No. GS-35F-05925.

Contents

Read this first: Important safety information iii
Before using this manual iii
Service and upgrades iii
Static electricity prevention iv
Power cords and power adapters iv
Extension cords and related devices. v
Plugs and outlets v
External devices v
Heat and product ventilation v
Computer placement notices vi
Operating environment vi
Laser compliance statement vii
Hazardous energy statement vii
Lithium coin-cell battery notice vii
Using earphones, headphones, or a headset . . . viii
Cleaning and maintenance ix

Chapter 1. Product overview 1
Hardware locations 1
Front view 1
Rear view 2
Computer components 5
Parts on the system board 6
Internal storage drives 8
Machine type and model label 9
Computer features. 10
Computer specifications 13
Programs 14

Chapter 2. Using your computer . . . 15
Registering your computer 15
Setting the computer volume 15
Using a disc 15
Guidelines about using the optical drive . . . 15
Handling and storing a disc 15
Playing and removing a disc 16
Recording a disc 16
Connecting to a network 16

Chapter 3. You and your computer . . 19
Arranging your workspace 19
Glare and lighting 19
Air circulation 19
Electrical outlet locations and cable lengths . . 19
Comfort 19
Accessibility information 20
Cleaning your computer 21
Maintenance 21
Basic maintenance tips 21
Good maintenance practices 22
Keeping your computer current 22
Moving your computer 22

Chapter 4. Security 25
Locking your computer 25
Locking the computer cover 25
Attaching a Kensington-style cable lock . . . 25
Viewing and changing security settings in the Setup Utility program 26
Using passwords and user accounts 26
Using fingerprint authentication 26
Using the cover presence switch 27
Using firewalls 27
Using the Smart USB Protection function 27
Computrace Agent software embedded in firmware (for selected models) 28
Trusted Platform Module (TPM). 28
Intel BIOS guard 28

Chapter 5. Advanced configuration 29
Using the Setup Utility program 29
Starting the Setup Utility program 29
Changing the display mode of the Setup Utility program 29
Changing the display language of the Setup Utility program 29
Enabling or disabling a device 30
Enabling or disabling the automatic power-on of your computer 30
Enabling or disabling the ErP LPS compliance mode 30
Enabling or disabling the configuration change detection 31
Changing the BIOS settings before installing a new operating system 31
Using BIOS passwords 31
Selecting a startup device 33
Changing the fan speed level 34
Exiting the Setup Utility program 34
Updating and recovering the BIOS 34
Configuring RAID 36
An Introduction to RAID 36
Configuring RAID with Intel RSTe 36
Configuring RAID with AVAGO MegaRAID Configuration Utility 38

© Copyright Lenovo 2020, 2023

Configuring RAID with Intel Virtual RAID on CPU 40

Chapter 6. Troubleshooting, diagnostics, and recovery 43

Basic procedure for resolving computer problems 43
Troubleshooting 43
Startup problems 43
Audio problems 44
CD or DVD problems 44
Intermittent problems 46
Storage drive problems 46
Ethernet LAN problems 46
Wireless LAN problem 47
Bluetooth problems 47
Performance problems 48
Serial connector problem 48
USB device problems 48
Software and driver problems 49
Diagnosing problems 49

Chapter 7. Hardware removal and installation 51

Handling static-sensitive devices 51
Preparing your computer and removing the computer cover 51
Removing and installing hardware 52
External options 52
Front bezel 53
Power button 53
PCIe card 54
Memory module 61
Optical drive 63
Storage drive in the front-access storage enclosure 66
M.2 solid-state drive 73
Device in the multi-drive conversion kit 77
Coin-cell battery 88
Cover presence switch 89
Power supply assembly 90
Heat-sink-and-fan assembly 92
Primary storage drive 94
Secondary storage drive 96
2.5-inch storage drive 98
Front fan assembly 101
Rear fan assembly 103
Completing the parts replacement 104

Chapter 8. Getting information, help, and service 107

Information resources 107
Accessing the user guide in various languages 107
Ubuntu and Gnome system 107
Safety and warranty 107
Lenovo Web site. 107
Lenovo Support Web site 107
Frequently asked questions 108
Help and service 108
Calling for service 108
Using other services 109
Purchasing additional services 109

Appendix A. System memory speed. 111

Appendix B. Supplemental information about the Ubuntu operating system 113

Appendix C. Regulatory and TCO Certified information of countries and regions 115

Appendix D. WEEE and recycling information of countries and regions 119

Appendix E. Restriction of Hazardous Substances (RoHS) Directive of countries and regions 123

Appendix F. ENERGY STAR model information 125

Appendix G. Notices. 127

Appendix H. Trademarks 129

Read this first: Important safety information

This chapter contains the safety information that you must be familiar with.

Before using this manual

CAUTION:
Before using this manual, be sure to read and understand all the related safety information for this product. Refer to the information in this section and the safety information in the *Safety, Warranty, and Setup Guide* **that you received with this product. Reading and understanding this safety information reduces the risk of personal injury and damage to your product.**

If you no longer have a copy of the *Safety, Warranty, and Setup Guide*, you can obtain a Portable Document Format (PDF) version from the Lenovo Support Web site at https://support.lenovo.com. The Lenovo Support Web site also provides the *Safety, Warranty, and Setup Guide* and this *User Guide* in additional languages.

Service and upgrades

Do not attempt to service a product yourself unless instructed to do so by the Customer Support Center or your documentation. Only use a Service Provider who is approved to repair your particular product.

Note: Some computer parts can be upgraded or replaced by the customer. Upgrades typically are referred to as options. Replacement parts approved for customer installation are referred to as Customer Replaceable Units, or CRUs. Lenovo provides documentation with instructions when it is appropriate for customers to install options or replace CRUs. You must closely follow all instructions when installing or replacing parts. The Off state of a power indicator does not necessarily mean that voltage levels inside a product are zero. Before you remove the covers from a product equipped with a power cord, always ensure that the power is turned off and that the product is unplugged from any power source. For more information about CRUs, refer to Chapter 7 “Hardware removal and installation” on page 51. If you have any questions or concerns, contact the Customer Support Center.

Although there are no moving parts in your computer after the power cord has been disconnected, the following warnings are required for your safety.

CAUTION:



Keep fingers and other parts of your body away from hazardous, moving parts. If you suffer an injury, seek medical care immediately.

CAUTION:



Avoid contact with hot components inside the computer. During operation, some components become hot enough to burn the skin. Before you open the computer cover, turn off the computer, disconnect power, and wait approximately 10 minutes for the components to cool.

CAUTION:



After replacing a CRU, reinstall all protective covers, including the computer cover, before connecting power and operating the computer. This action is important to help prevent unexpected electrical shock and help ensure the containment of an unexpected fire that could happen under extremely rare conditions.

CAUTION:

© Copyright Lenovo 2020, 2023



When replacing CRUs, be cautious of sharp edges or corners that might cause injury. If you suffer an injury, seek medical care immediately.

Static electricity prevention

Static electricity, although harmless to you, can seriously damage computer components and options. Improper handling of static-sensitive parts can damage the part. When you unpack an option or CRU, do not open the static-protective package containing the part until the instructions direct you to install it.

When you handle options or CRUs, or perform any work inside the computer, take the following precautions to avoid static-electricity damage:

- Limit your movement. Movement can cause static electricity to build up around you.
- Always handle components carefully. Handle adapters, memory modules, and other circuit boards by the edges. Never touch exposed circuitry.
- Prevent others from touching components.
- When you install a static-sensitive option or CRU, touch the static-protective package containing the part to a metal expansion-slot cover or other unpainted metal surface on the computer for at least two seconds. This reduces static electricity in the package and your body.
- When possible, remove the static-sensitive part from the static-protective packaging and install the part without setting it down. When this is not possible, place the static-protective packaging on a smooth, level surface and place the part on it.
- Do not place the part on the computer cover or other metal surface.

Power cords and power adapters

Use only the power cords and power adapters supplied by the product manufacturer. Do not use the ac power cord for other devices.

The power cords shall be safety approved. For Germany, it shall be H05VV-F, 3G, 0.75 mm^2, or better. For other countries, the suitable types shall be used accordingly.

Never wrap a power cord around a power adapter or other object. Doing so can stress the cord in ways that can cause the cord to fray, crack, or crimp. This can present a safety hazard.

Always route power cords so that they will not be walked on, tripped over, or pinched by objects.

Protect power cord and power adapters from liquids. For instance, do not leave your power cord or power adapter near sinks, tubs, toilets, or on floors that are cleaned with liquid cleansers. Liquids can cause a short circuit, particularly if the power cord or power adapter has been stressed by misuse. Liquids also can cause gradual corrosion of power cord terminals and/or the connector terminals on a power adapter, which can eventually result in overheating.

Ensure that all power cord connectors are securely and completely plugged into receptacles.

Do not use any power adapter that shows corrosion at the ac input pins or shows signs of overheating (such as deformed plastic) at the ac input or anywhere on the power adapter.

Do not use any power cords where the electrical contacts on either end show signs of corrosion or overheating or where the power cord appears to have been damaged in any way.

Extension cords and related devices

Ensure that extension cords, surge protectors, uninterruptible power supplies, and power strips that you use are rated to handle the electrical requirements of the product. Never overload these devices. If power strips are used, the load should not exceed the power strip input rating. Consult an electrician for more information if you have questions about power loads, power requirements, and input ratings.

Plugs and outlets



If a receptacle (power outlet) that you intend to use with your computer equipment appears to be damaged or corroded, do not use the outlet until it is replaced by a qualified electrician.

Do not bend or modify the plug. If the plug is damaged, contact the manufacturer to obtain a replacement.

Do not share an electrical outlet with other home or commercial appliances that draw large amounts of electricity. Otherwise, unstable voltage might damage your computer, data, or connected devices.

Some products are equipped with a three-pronged plug. This plug fits only into a grounded electrical outlet. This is a safety feature. Do not defeat this safety feature by trying to insert it into a non-grounded outlet. If you cannot insert the plug into the outlet, contact an electrician for an approved outlet adapter or to replace the outlet with one that enables this safety feature. Never overload an electrical outlet. The overall system load should not exceed 80 percent of the branch circuit rating. Consult an electrician for more information if you have questions about power loads and branch circuit ratings.

Be sure that the power outlet you are using is properly wired, easily accessible, and located close to the equipment. Do not fully extend power cords in a way that will stress the cords.

Be sure that the power outlet provides the correct voltage and current for the product you are installing.

Carefully connect and disconnect the equipment from the electrical outlet.

External devices

Do not connect or disconnect any external device cables other than Universal Serial Bus (USB) cables while the computer power is on; otherwise, you might damage your computer. To avoid possible damage to connected devices, wait at least five seconds after the computer is shut down to disconnect external devices.

Heat and product ventilation



Computers, power adapters, and many accessories can generate heat when turned on and when batteries are charging. Always follow these basic precautions:

- Do not leave your computer, power adapter, or accessories in contact with your lap or any part of your body for an extended period when the products are functioning or when the battery is charging. Your computer, power adapter, and many accessories produce some heat during normal operation. Extended contact with the body could cause discomfort or, potentially, a skin burn.

© Copyright Lenovo 2020, 2023

- Do not charge the battery or operate your computer, power adapter, or accessories near flammable materials or in explosive environments.
- Ventilation slots, fans, and heat sinks are provided with the product for safety, comfort, and reliable operation. These features might inadvertently become blocked by placing the product on a bed, sofa, carpet, or other flexible surface. Never block, cover, or disable these features.

Inspect your desktop computer for dust accumulation at least once every three months. Before inspecting your computer, turn off the power and unplug the computer's power cord from the electrical outlet; then remove any dust from vents and perforations in the bezel. If you notice external dust accumulation, then examine and remove dust from the inside of the computer including heat sink inlet fins, power supply vents, and fans. Always turn off and unplug the computer before opening the cover. If possible, avoid operating your computer within two feet of high-traffic areas. If you must operate your computer in or near a high-traffic area, inspect and, if necessary, clean your computer more frequently.

For your safety and to maintain optimum computer performance, always follow these basic precautions with your desktop computer:

- Keep the cover closed whenever the computer is plugged in.
- Regularly inspect the outside of the computer for dust accumulation.
- Remove dust from vents and any perforations in the bezel. More frequent cleanings might be required for computers in dusty or high-traffic areas.
- Do not restrict or block any ventilation openings.
- Do not store or operate your computer inside furniture, as this might increase the risk of overheating.
- Airflow temperatures into the computer should not exceed 35°C (95°F).
- Do not install air filtration devices. They may interfere with proper cooling.

Computer placement notices

Inappropriate computer placement might cause harm to children.

- Place the computer on a sturdy piece of low-rise furniture or furniture that has been anchored.
- Do not place the computer at the edge of the furniture.
- Keep the computer cables out of the reach of children.
- Some items, such as toys, might attract children. Keep such items away from the computer.

Supervise children in rooms where the above safety instructions cannot be fully implemented.

Operating environment

The optimal environment in which to use your computer is 10°C–35°C (50°F–95°F) with humidity ranging between 35% and 80%. If your computer is stored or transported in temperatures less than 10°C (50°F), allow the cold computer to rise slowly to an optimal operating temperature of 10°C–35°C (50°F–95°F) before use. This process could take two hours in extreme conditions. Failure to allow your computer to rise to an optimal operating temperature before use could result in irreparable damage to your computer.

If possible, place your computer in a well-ventilated and dry area without direct exposure to sunshine.

Keep electrical appliances such as an electric fan, radio, high-powered speakers, air conditioner, and microwave oven away from your computer because the strong magnetic fields generated by these appliances can damage the monitor and data on the storage drive.

Do not place any beverages on top of or beside the computer or other connected devices. If liquid is spilled on or in the computer or a connected device, a short circuit or other damage might occur.

Do not eat or smoke over your keyboard. Particles that fall into your keyboard can cause damage.

Laser compliance statement

CAUTION:



When laser products (such as CD-ROMs, DVD drives, fiber optic devices, or transmitters) are installed, note the following:

- **Do not remove the covers. Removing the covers of the laser product could result in exposure to hazardous laser radiation. There are no serviceable parts inside the device.**
- **Use of controls or adjustments or performance of procedures other than those specified herein might result in hazardous radiation exposure.**

**DANGER**

Some laser products contain an embedded Class 3A or Class 3B laser diode. Note the following: Laser radiation when open. Do not stare into the beam, do not view directly with optical instruments, and avoid direct exposure to the beam.

Hazardous energy statement

**DANGER**



Disconnect all power cords from electrical outlets before removing the computer cover or any part that has the above label attached.

DO NOT disassemble components that have the above label attached. There are no serviceable parts inside these components.

Your product is designed for safe use. However, hazardous voltage, current, and energy levels are present inside any component that has this label attached. Disassembling of these components might cause fire or might even result in death. If you suspect a problem with one of these parts, contact a service technician.

Lithium coin-cell battery notice

**DANGER**

Danger of explosion if battery is incorrectly replaced.



© Copyright Lenovo 2020, 2023

When replacing the lithium coin-cell battery, use only the same type or equivalent type that is recommended by the manufacturer. The battery contains lithium and can explode if not properly used, handled, or disposed of. Swallowing the lithium coin-cell battery will cause chocking or severe internal burns in just two hours and might even result in death.

Keep batteries away from children. If the lithium coin-cell battery is swallowed or placed inside any part of the body, seek medical care immediately.

Do not:

- Throw or immerse into water
- Heat to more than 100 °C (212°F).
- Repair or disassemble
- Leave in an extremely low air pressure environment
- Leave in an extremely high-temperature environment
- Crush, puncture, cut, or incinerate

Dispose of the battery as required by local ordinances or regulations.

The following statement applies to users in the state of California, U.S.A.

California Perchlorate Information:

Products containing manganese dioxide lithium coin-cell batteries may contain perchlorate.

Perchlorate Material - special handling may apply, see https://www.dtsc.ca.gov/hazardouswaste/perchlorate/.

Using earphones, headphones, or a headset

- If your computer has both a headphone connector and an audio line-out connector, always use the headphone connector for earphones, headphones, or a headset. However, the headphone connector does not support the microphone of the headset.
- If your computer has both a headset connector and an audio line-out connector, always use the headset connector for earphones, headphones, or a headset.

CAUTION:



Excessive sound pressure from earphones and headphones can cause hearing loss. Adjustment of the equalizer to maximum increases the earphone and headphone output voltage and the sound pressure level. Therefore, to protect your hearing, adjust the equalizer to an appropriate level.

Excessive use of headphones or earphones for a long period of time at high volume can be dangerous if the output of the headphone or earphone connectors do not comply with specifications of EN 50332-2. The headphone output connector of your computer complies with EN 50332-2 Sub clause 7. This specification limits the computer's maximum wide band true RMS output voltage to 150 mV. To help protect against hearing loss, ensure that the headphones or earphones you use also comply with EN 50332-2 (Clause 7 Limits) or a wide band characteristic voltage of 75 mV. Using headphones that do not comply with EN 50332-2 can be dangerous due to excessive sound pressure levels.

If your Lenovo computer came with headphones or earphones in the package, as a set, the combination of the headphones or earphones and the computer already complies with the specifications of EN 50332-1. If different headphones or earphones are used, ensure that they comply with EN 50332-1 (Clause 6.5 Limitation Values). Using headphones that do not comply with EN 50332-1 can be dangerous due to excessive sound pressure levels.

Cleaning and maintenance

Keep your computer and workspace clean. Shut down the computer and then disconnect the power cord before cleaning the computer. Do not spray any liquid detergent directly on the computer or use any detergent containing flammable material to clean the computer. Spray the detergent on a soft cloth and then wipe the computer surfaces.

© Copyright Lenovo 2020, 2023

Chapter 1. Product overview

This chapter provides basic information to help you get familiar with your computer.

Hardware locations

This section provides information about the locations of your computer hardware.

Front view

Note: The computer hardware might look slightly different from the illustration.

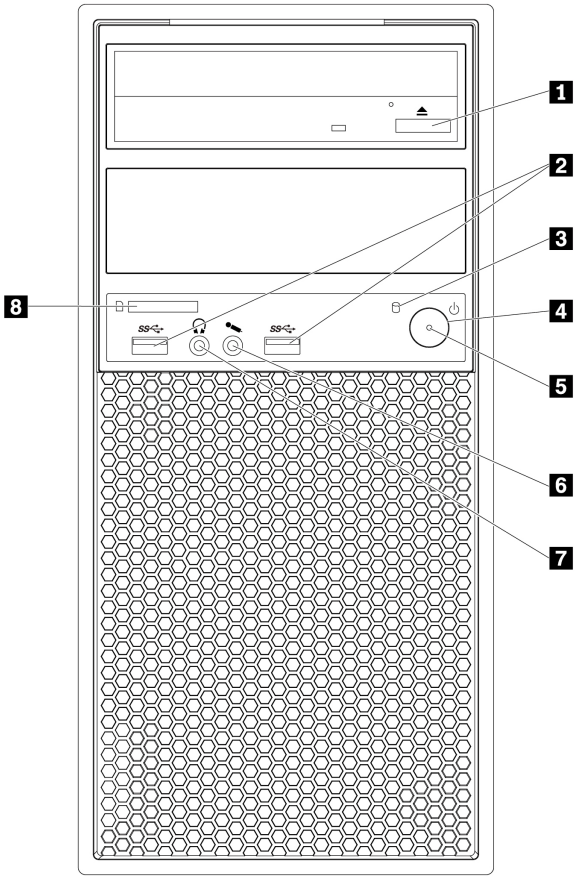

Figure 1. Front connectors, controls, and indicators

1 Optical-drive eject/close button (available on some models)	2 USB 3.0 connectors (2)
3 Storage drive activity indicator	4 Power button
5 Power indicator	6 Microphone connector
7 Headphone connector	8 SD card slot

© Copyright Lenovo 2020, 2023

1 Optical-drive eject/close button

Press the button to eject or close the tray of the optical drive.

2 USB 3.0 connectors (2)

Use this connector to attach a USB-compatible device, such as a USB keyboard, mouse, storage drive, or printer.

3 Storage drive activity indicator

This indicator shows the status of the internal storage drives (such as hard disk drives or solid-state drives).

On: The storage drives are active and data is being transferred.

Off (when the computer is powered on): The storage drives are not in use or no data is being transferred.

4 Power button

Press the power button to turn on your computer. If your computer is unresponsive, you can turn off the computer by pressing and holding the power button for four or more seconds.

5 Power indicator

When the power indicator is on, the computer is turned on.

6 Microphone connector

Connect the microphone to your computer through the microphone connector.

7 Headphone connector

Connect the headphone to your computer through the headphone connector.

8 SD card slot

Insert a secure digital (SD) card into the slot to access the data on the card.

Rear view

Some connectors on the rear of your computer are color-coded to help you determine where to connect the cables on your computer.

Note: The computer hardware might look slightly different from the illustration.

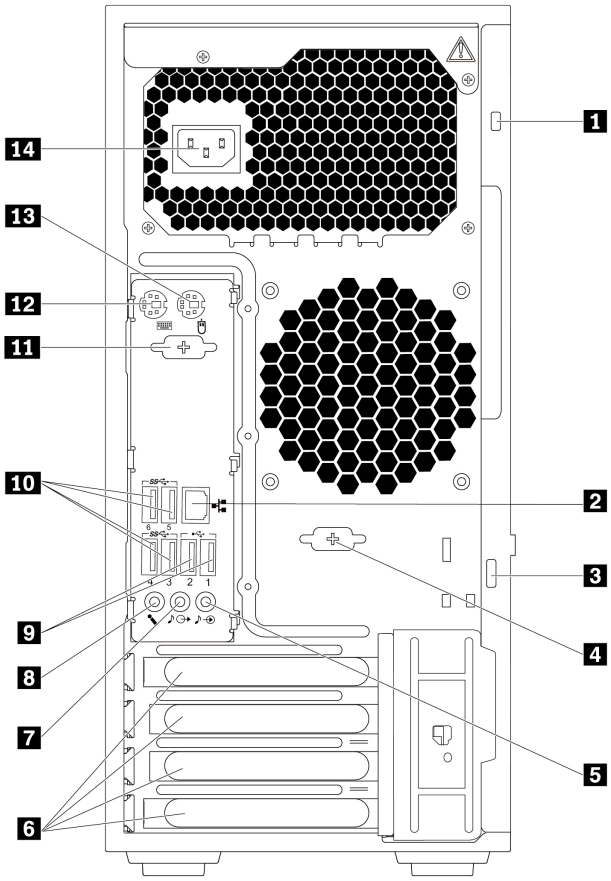

Figure 2. Rear view

1 Security-lock slot	2 Ethernet connector
3 Padlock loop	4 Serial connector (available on some models)
5 Audio line-in connector	6 PCIe card area*
7 Audio line-out connector	8 Microphone connector
9 USB 2.0 connectors (2)	10 USB 3.0 connectors (4)
11 Serial connector (available on some models)	12 PS/2 keyboard connector
13 PS/2 mouse connector	14 Power-cord connector

Notes:

- * A discrete graphics card or a network adapter can be installed in the appropriate Peripheral Component Interconnect Express (PCIe) card slot. If such a card is installed, use the connectors on the card instead of the corresponding connectors on the computer to optimize the performance.
- Depending on your computer model, the preinstalled cards might vary. One or more graphics cards might be installed to provide the following connectors:
  - DisplayPort® connector
  - Digital Visual Interface (DVI) connector
  - Mini DisplayPort® connector

DisplayPort connector

Use this connector to attach a high-performance monitor, a direct-drive monitor, or other compatible devices.

DVI monitor connector

Use this connector to attach a DVI monitor or other compatible devices.

Mini DisplayPort connector

Use this connector to attach a high-performance monitor, a direct-drive monitor, or other compatible devices. The Mini DisplayPort connector is a miniaturized version of a DisplayPort connector.

1 Security-lock slot

Attach a Kensington-style cable lock to the security-lock slot to secure your computer. For more information, see “Attaching a Kensington-style cable lock” on page 25.

2 Ethernet connector

Connect an Ethernet cable for a local area network (LAN).

Note: To operate the computer within Federal Communications Commission (FCC) Class B limits, use a Category 5 Ethernet cable.

3 Padlock loop

Attach a padlock to secure your computer. For more information, see “Locking the computer cover” on page 25.

4 11 Serial connector (available on some models)

Connect an external modem, a serial printer, or other devices that use a 9-pin serial connector to the serial connector.

5 Audio line-in connector

The audio line-in connector is used to receive audio signals from an external audio device, such as a stereo system. When you attach an external audio device, a cable connection is established between the audio line-out connector of the device and the audio line-in connector of the computer.

6 PCIe card area

To further improve the computer performance, you can install PCIe cards into this area. Depending on your computer model, the preinstalled cards might vary.

7 Audio line-out connector

The audio line-out connector is used to send audio signals from the computer to external devices, such as headphones.

8 Microphone connector

Use this connector to attach a microphone to your computer when you want to record sound or if you use speech-recognition software.

9 USB 2.0 connector(2)

Use this connector to attach a USB-compatible device, such as a USB keyboard, mouse, storage drive, or printer.

10 USB 3.0 connector(4)

Use this connector to attach a USB-compatible device, such as a USB keyboard, mouse, storage drive, or printer.

12 PS/2 keyboard connector

Use this connector to attach a Personal System/2 (PS/2) keyboard.

13 PS/2 mouse connector

Use this connector to attach a PS/2 mouse, a trackball, or other pointing devices.

14 Power-cord connector

Connect the power cord to your computer for power supply.

Computer components

Notes:

- Depending on the model, your computer might look slightly different from the illustration.
- To remove the computer cover, see “Preparing your computer and removing the computer cover” on page 51.

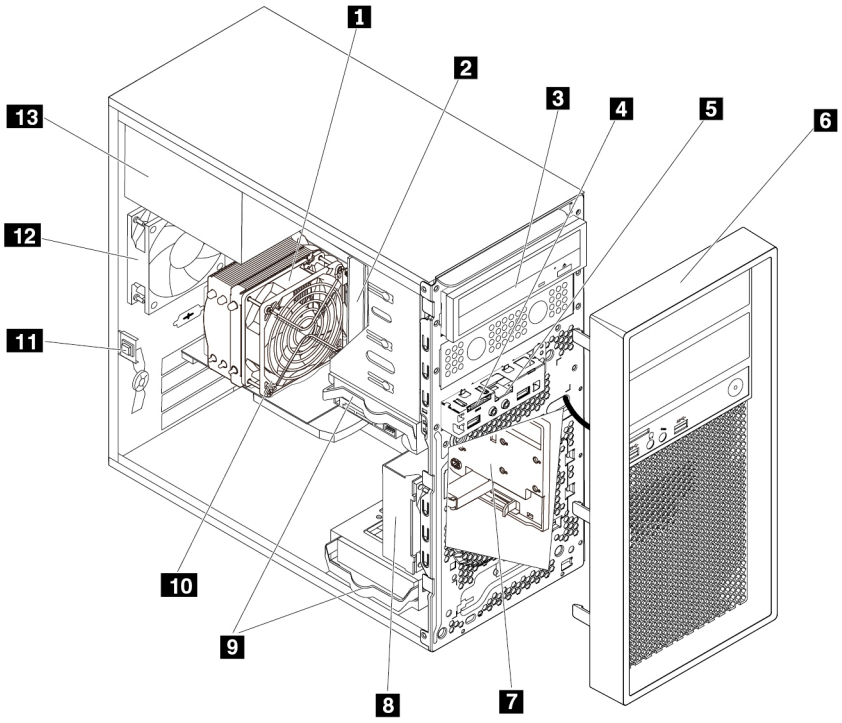

Figure 3. Component locations

1 Heat-sink-and-fan assembly	2 Memory module
3 Optical drive (available on some models)	4 Card reader
5 Front audio and USB assembly	6 Front bezel
7 M.2 solid-state drive assembly (available on some models)	8 Front fan assembly
9 Storage drives	10 Graphics card (available on some models)
11 Cover presence switch (also called intrusion switch) (available on some models)	12 Rear fan assembly
13 Power supply assembly	

Parts on the system board

The following illustration shows the locations of the parts on the system board.

Note: The system board might look slightly different from the illustration.

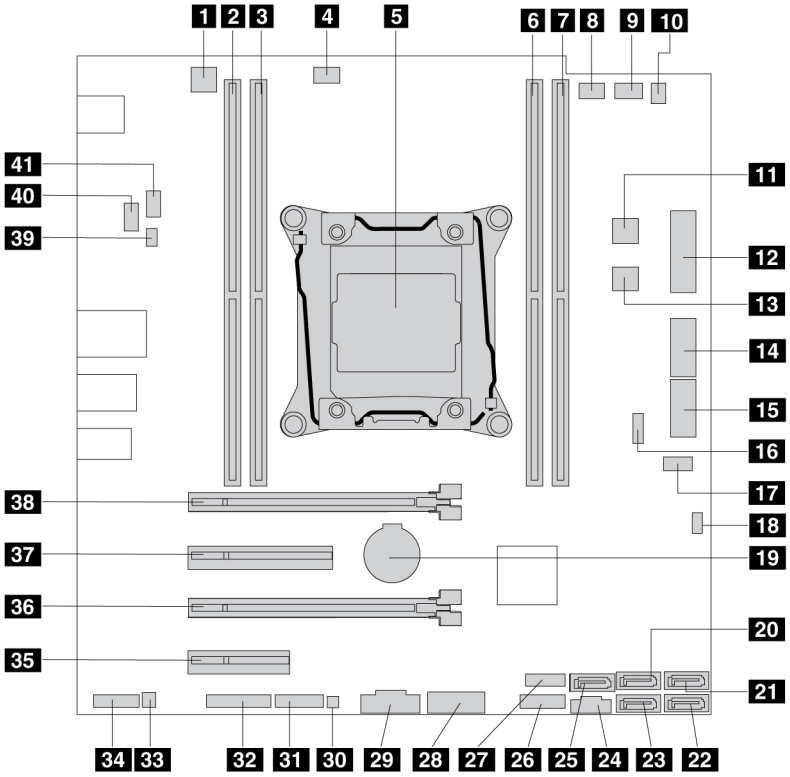

Figure 4. System board part locations

1 4-pin power connector	2 Memory slot
3 Memory slot	4 Microprocessor fan connector
5 Microprocessor	6 Memory slot
7 Memory slot	8 Flex bay 1 fan connector
9 Flex bay 2 fan connector	10 Thermal sensor connector
11 4-pin SATA power connector	12 14-pin power connector
13 4-pin SATA power connector	14 M.2 solid-state drive slot 1
15 M.2 solid-state drive slot 2	16 VROC connector
17 Front-fan connector	18 Clear CMOS /Recovery jumper
19 Coin-cell battery	20 SATA 4 connector
21 SATA 2 connector	22 SATA 1 connector
23 SATA 3 connector	24 Thunderbolt™ control connector
25 SATA 7 connector (eSATA connector)	26 Front-bezel connector (for connecting LED indicators and the power button)
27 USB 2.0 connector (for connecting the Wi-Fi connector or 9-in-1 card reader connector)	28 Front USB 3.0 connector (for connecting USB connectors on the front panel)
29 Internal USB 3.0 connector	30 Storage-drive activity indicator connector
31 Four-digit-diagnostics display connector	32 Trusted Cryptography Module (TCM) connector
33 Internal-speaker connector	34 Front-audio connector

35 PCIe x4 card slot	36 PCIe x16 card slot
37 PCIe x8 card slot	38 PCIe x16 card slot (graphics card available on some models)
39 Cover presence switch connector (intrusion switch connector)	40 Rear-fan connector
41 SATA Serial (COM) connector	

Internal storage drives

Internal storage drives are devices that your computer uses to read and store data. You can add drives to your computer to increase storage capacity and enable your computer to read other types of media. Internal storage drives are installed in bays.

When you install or replace an internal storage drive, note the type and size of the drive that each bay supports and correctly connect the required cables. Refer to the appropriate section in “Removing and installing hardware” on page 52 for instructions on how to install or replace internal storage drives for your computer.

The following illustration shows the locations of the storage drive bays.

Note: The computer hardware might look slightly different from the illustration.

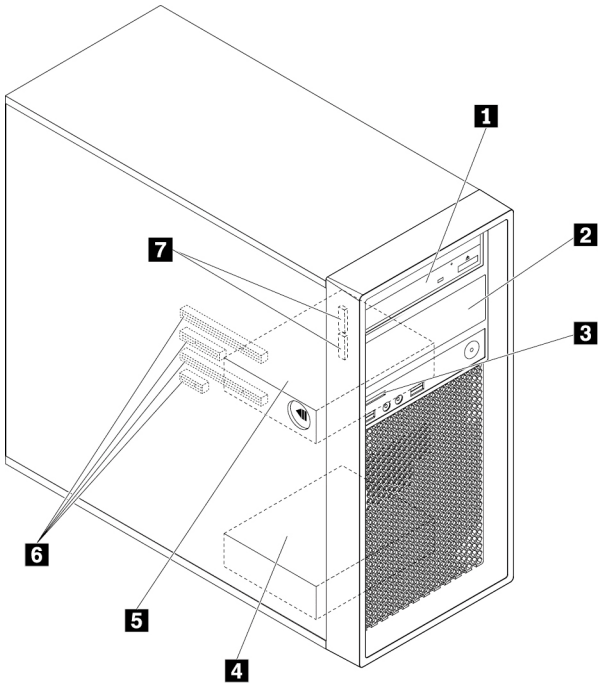

Figure 5. Storage drive bay locations

1 Primary flex bay	2 Secondary flex bay (available on some models)
3 SD card slot	4 Secondary storage drive bay
5 Primary storage drive bay	6 PCIe card slots (4)
7 M.2 solid-state drive slots (2)	

1 2 Flex bays (2)

Depending on your computer model, the following devices might be installed in the flex bays:

- Flex module

  Depending on your computer model, the following parts might be preinstalled in the flex module:

  – 15-in-1 card reader
  – External Serial Advanced Technology Attachment (eSATA) connector
  – Four-digit diagnostics display
  – Institute of Electrical and Electronics Engineers (IEEE) 1394 connector
  – Slim optical drive
  – Front Thunderbolt adapter kit
  – USB-C connector
- Front-access storage enclosure
- Multi-drive conversion kit

  Depending on your computer model, the following parts might be preinstalled in the multi-drive conversion kit:

  – Storage drive (such as hard disk drive, solid-state drive, or hybrid drive)
  – Slim optical drive
- Optical drive
- Slim-optical-drive adapter

3 SD card slot

An SD card is installed in some models.

4 5 Storage drive bays (2)

You can install hard disk drives, solid-state drives, or hybrid drives in the storage drive bays.

6 PCIe card slots (4)

You can install compatible PCIe cards and PCIe solid-state drives in the PCIe card slots.

7 M.2 solid-state drive slots (2)

One or two M.2 solid state drives are installed in some models.

Machine type and model label

The machine type and model label identifies your computer. When you contact Lenovo for help, the machine type and model information helps support technicians to identify your computer and provide faster service.

The following is a sample of the machine type and model label.

Note: The computer hardware might look slightly different from the illustration.

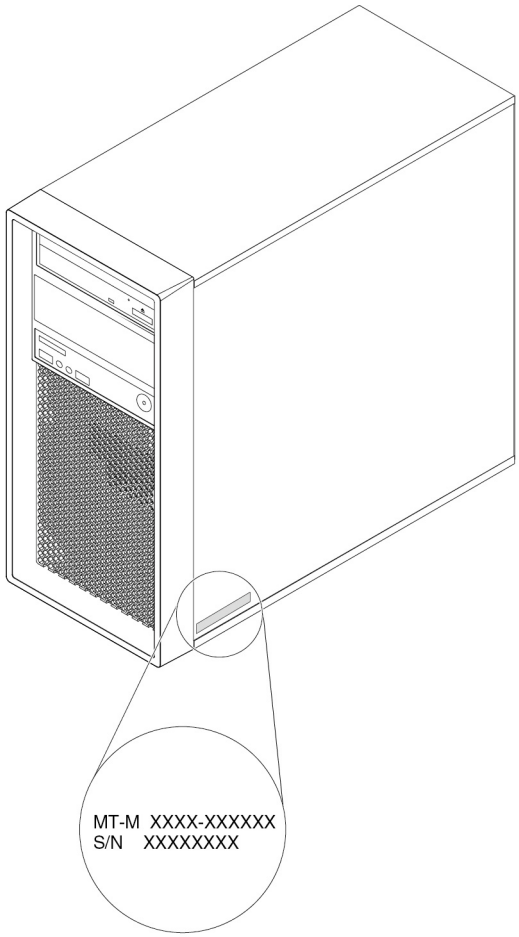

Figure 6. Machine type and model label

Computer features

For your specific computer model, some features might vary or not apply.

Information about your computer

To view basic information (such as microprocessor and memory information) about your computer, do the following:

1. Open the system menu from the top-right corner and click **Settings**.
2. Click **About**.

Memory

Your computer supports up to four double data rate 4 (DDR4) error correction code (ECC) registered dual inline memory modules (RDIMMs).

Storage drives

Your computer supports the following storage drives:

- Hard disk drive
- Hybrid drive (available on some models)
- M.2 solid-state drive (available on some models)

- Optical drive (available on some models)
- SD card (available on some models)
- Solid-state drive (available on some models)

To view the amount of storage drive space, use the Disks utility:

1. Click **Activities** .
2. Type `Disks` in the search box.
3. Click on the Disks utility icon.

Video features

- PCIe x16 card slots on the system board for a discrete graphics card
- Video connectors on a discrete graphics card:
  - DVI connector (available on some models)
  - DisplayPort connector (available on some models)
  - Mini DisplayPort connector (available on some models)

Audio features

Integrated audio controller supports the following connectors and devices on your computer:

- Audio line-in connector
- Audio line-out connector
- Internal speaker
- Microphone connector

Input/Output (I/O) features

- 100/1000 Mbps Ethernet connector
- 9-pin serial connector
- Audio connectors (audio line-in connector, audio line-out connector, and microphone connector)
- Display connectors (DisplayPort connector, DVI connector, and Mini DisplayPort connector) (vary by graphics card)
- eSATA connector
- Institute of Electrical and Electronics Engineer (IEEE) 1394 connector (available on some models)
- PS/2 keyboard connector
- PS/2 mouse connector
- SATA connectors
- USB connectors

Expansion

- Flex bay
- M.2 solid-state drive slots
- Memory slots
- PCIe x4 card slot
- PCIe x8 card slot
- PCIe x16 card slots

- SD card slot
- Storage drive bays

Power supply

Your computer comes with one of the following power supplies:

- 500-watt automatic 92% voltage-sensing power supply
- 625-watt automatic voltage-sensing power supply

Wireless features

Depending on your computer model, the following wireless features are supported:

- Wireless LAN
- Bluetooth

System management features

- Ability to store power-on self-test (POST) hardware test results
- Desktop Management Interface (DMI)

  Desktop Management Interface provides a common path for users to access information about all aspects of a computer. The information includes the processor type, installation date, attached printers and other peripherals, power sources, and maintenance history.
- ErP LPS compliance mode

  The energy-related products directive (ErP) lowest power state (LPS) compliance mode reduces the consumption of electricity when your computer is in sleep or off mode. For more information, see “Enabling or disabling the ErP LPS compliance mode” on page 30.
- Intel® Standard Manageability (ISM)

  Intel Standard Manageability builds certain functionalities into computer hardware and firmware. Therefore, computers are less expensive for businesses and easier to monitor, maintain, update, upgrade, and repair.
- Intel Active Management Technology (Intel AMT)

  With specific Intel platform capabilities and third-party management and security applications, Intel Active Management Technology enables IT administrators or managed service providers to easily and remotely discover, repair, and protect their networked computing assets.
- Intel Rapid Storage Technology enterprise (Intel RSTe)

  The Intel RSTe configuration utility enables you to configure Redundant Array of Independent Disks (RAID) for computers with specific Intel chipset system boards. It supports RAID levels 0, 1, 5, and 10 on computers installed with Serial Advanced Technology Attachment (SATA) devices.
- Preboot Execution Environment (PXE)

  Preboot Execution Environment enables you to start computers using a network interface. This manner is independent of starting computers from data storage devices (such as the hard disk drive) or installed operating systems.
- System Management (SM) basic input/output system (BIOS) and SM software

  The SM BIOS specification defines data structures and access methods in a BIOS. Therefore, a user or an application can store and retrieve information specific about the computer in question.
- Wake on LAN (WOL)

  Wake on LAN is an Ethernet computer networking standard that allows a computer to be turned on or woken up by a network message. The message is usually sent by a program running on another computer on the same local area network.

- Windows Management Instrumentation (WMI)

  Windows Management Instrumentation is a set of extensions to the Windows Driver Model. It provides an operating system interface through which instrumented components provide information and notification.

Security features

- Ability to enable and disable a device
- Ability to enable and disable USB connectors individually
- Antivirus program
- BIOS passwords and account login to deter unauthorized use of your computer
- Computrace Agent software embedded in firmware
- Cover presence switch (also called intrusion switch)
- Finger authentication (available on some models)
- Firewalls
- Intel BIOS guard
- Startup sequence control
- Startup without a keyboard or mouse
- Support for a computer cover lock
- Support for a Kensington-style cable lock
- Support for a padlock
- Trusted Platform Module (TPM)

Preinstalled operating system

Your computer is preinstalled with the Ubuntu operating system. Additional operating systems might be identified by Lenovo as compatible with your computer. To determine if an operating system has been certified or tested for compatibility, check the Web site of the operating system provider.

Computer specifications

This section lists the physical specifications for your computer.

Dimensions

- Width: 175 mm (6.89 inches)
- Height: 375.5 mm (14.78 inches)
- Depth: 426 mm (16.77 inches)

Weight

Maximum configuration as shipped: 14.5 kg (31.97 lb)

Environment

- Air temperature:

  Operating: From 10°C (50°F) to 35°C (95°F)

  Storage in original shipping package: From -40°C (-40°F) to 60°C (140°F)

  Storage without package: From -10°C (14°F) to 60°C (140°F)
- Humidity:

  Operating: 10%–80% (non-condensing)

Storage: 10%–90% (non-condensing)

- Altitude:

  Operating: From -15.2 m (-50 ft) to 3048 m (10 000 ft)

  Storage: From -15.2 m (-50 ft) to 10 668 m (35 000 ft)

Electrical input

- Input voltage: From 100 V ac to 240 V ac
- Input frequency: 50/60 Hz

Programs

This section provides information about the programs on your computer.

To access a program on your computer, do one of the following:

- Press the super key (with the Windows logo) or open the Activities menu on the top left and type in the name of the application you want to launch.
- Click the **Show application** button on the lower left, and then select the application you want to launch.

Chapter 2. Using your computer

This chapter provides information to help you use the various features provided by your computer.

Registering your computer

When you register your computer with Lenovo, you enter required information into a Lenovo database. The information enables Lenovo to contact you when there is a recall or other severe problem and provide quicker service when you call Lenovo for help. In addition, some locations offer extended privileges and services to registered users.

To register your computer with Lenovo, go to https://support.lenovo.com/productregistration and follow the instructions on the screen.

Setting the computer volume

To set the computer volume, do the following:

1. Open the system menu from the top-right corner and click **Settings**.
2. Click **Sound**.
3. Change the settings as you prefer.

Using a disc

This section provides instructions on how to use a disc and the optical drive.

Guidelines about using the optical drive

When using the optical drive, follow these guidelines:

- Do not place the computer in a location where the drive is exposed to any of the following conditions:
  - High temperature
  - High humidity
  - Excessive dust
  - Excessive vibration or sudden shock
  - An inclined surface
  - Direct sunlight
- Do not insert any object other than a disc into the drive.
- Do not insert damaged discs into the drive. Warped, scratched, or dirty discs can damage the drive.
- Before moving the computer, remove the disc from the drive.

Handling and storing a disc

When handling and storing a disc, follow these guidelines:

- Hold the disc by its edges. Do not touch the surface of the side that is not labelled.
- To remove dust or fingerprints, wipe the disc with a clean, soft cloth from the center to the outside. Wiping the disc in a circular direction might cause loss of data.
- Do not write or stick paper on the disc.

© Copyright Lenovo 2020, 2023

- Do not scratch or mark the disc.
- Do not place or store the disc in direct sunlight.
- Do not use benzene, thinners, or other cleaners to clean the disc.
- Do not drop or bend the disc.

Playing and removing a disc

To play a disc, do the following:

1. With the computer on, press the eject/close button on the front of the optical drive. The tray slides out of the drive.
2. Insert a disc into the tray. Some optical drive has a snap hub in the center of the tray. If your drive has a snap hub, support the tray with one hand and then push the center of the disc until it snaps into place.
3. Press the eject/close button again or gently push the tray forward to close the tray. The disc player program starts automatically. For more information, refer to the help system of the disc player program.

To remove a disc from the optical drive, do the following:

1. With the computer on, press the eject/close button on the front of the optical drive. The tray slides out of the drive.
2. Carefully remove the disc from the tray.
3. Press the eject/close button again or gently push the tray forward to close the tray.

Note: If the tray does not slide out of the drive when you press the eject/close button, turn off your computer. Then, insert a straightened paper clip into the emergency-eject hole adjacent to the eject/close button. Use the emergency eject only in an emergency.

Recording a disc

If your optical drive supports recording, you can record a disc by doing the following:

1. Insert a recordable disc into the optical drive that supports recording.
2. In the **Blank CD/DVD-R Disc** notification that pops up at the bottom of the screen, select **Open with CD/DVD Creator**.
3. Follow the on-screen instructions.

Connecting to a network

This section provides instructions on how to connect to a network.

Connecting to an Ethernet LAN

You can connect your computer to an Ethernet LAN by connecting an Ethernet cable to the Ethernet connector.

DANGER

To avoid the risk of electrical shock, do not connect the telephone cable to the Ethernet connector.

Connecting to a wireless LAN

You can connect your computer to a wireless LAN without the use of an Ethernet cable but by means of radio waves only.

Note: The wireless LAN feature is available only on some models.

To establish a wireless-LAN connection, do the following:

1. Open the system menu from the top-right corner and expand the Wi-Fi section of the menu.
2. Click **Select Network**. A list of available wireless networks is displayed.
3. Select a network available for connection. Provide required information, if needed.

Connecting to a Bluetooth-enabled device

Bluetooth is a short-range wireless communications technology. Use Bluetooth to establish a wireless connection between your computer and another Bluetooth-enabled device within a distance of about 10 m (32.8 ft).

Note: The Bluetooth feature is available only on some models.

To connect to a Bluetooth-enabled device, do the following:

1. Open the system menu from the top-right corner and click **Settings**.
2. Choose the Bluetooth menu and enable Bluetooth with the toggle button at the top. Any discoverable devices will be shown in the **Devices** list.
3. Select a Bluetooth device, and then follow the on-screen instructions.

Your Bluetooth-enabled device and computer will automatically connect the next time if the two devices are in range of each other with Bluetooth turned on. You can use Bluetooth for data transfer or remote control and communication.

Chapter 3. You and your computer

This chapter provides information about accessibility, ergonomic, and cleaning and maintenance.

Arranging your workspace

Arrange your workspace to suit your needs and the kind of work you do. This section provides information about the factors that affect the way you arrange your workspace.

Glare and lighting

Position the monitor to minimize glare and reflections from overhead lights, windows, and other light sources. Reflected light from shiny surfaces can cause annoying reflections on your screen. When possible, place the monitor at right angles to windows and other light sources. If necessary, reduce overhead lighting by turning off lights or using lower wattage bulbs. If you install the monitor near a window, use curtains or blinds to block the sunlight. You can adjust the brightness and contrast controls on the monitor as the room lighting changes throughout the day.

Where it is impossible to avoid reflections or to adjust the lighting, an antiglare filter placed over the screen might be helpful. However, these filters might affect the clarity of the image on the screen; try them only after you have exhausted other methods of reducing glare.

Air circulation

Your computer produces heat. The computer has a fan that pulls in fresh air and forces out hot air through the air vents. Blocking the air vents can cause overheating, which might result in a malfunction or damage. Position the computer so that nothing blocks the air vents; usually, 51 mm (2 inches) of air space is sufficient. Ensure that the vented air is not blowing on people.

Electrical outlet locations and cable lengths

The following factors might determine the final placement of your computer:

- Locations of electrical outlets
- Length of power cords or power adapters
- Length of the cables that are connected to other devices

For more information about power cords or power adapters, see “Power cords and power adapters” on page iv.

Comfort

Although no single working position is ideal for everyone, here are a few guidelines to help you find a position that suits you best. The following figure sets an example for your reference.

© Copyright Lenovo 2020, 2023



- Screen position: Keep the screen at a comfortable viewing distance, usually 51–61 cm (20–24 inches). Then, adjust the screen so that the top of the screen is at or slightly below eye level and you can view it without twisting your body.
- Chair position: Use a chair that gives you good back support and seat height adjustment. Use chair adjustments to best suit your desired posture.
- Head position: Keep your head and neck in a comfortable and neutral (vertical or upright) position.
- Arm and hand positions: Keep your forearms, wrists, and hands in a relaxed and neutral (horizontal) position. Type with a soft touch without pounding the keys.
- Leg position: Keep your thighs parallel to the floor and your feet flat on the floor or on a footrest.

Make minor modifications in your working posture to deter the onset of discomfort caused by long periods of working in the same position. Frequent short breaks from your work also help to prevent minor discomfort associated with your working posture.

Accessibility information

Lenovo is committed to providing users who have hearing, vision, and mobility limitations with greater access to information and technology. This section provides information about the ways these users can get the most out of their computer experience. You also can get the most up-to-date accessibility information from the following Web site:
https://www.lenovo.com/accessibility

Universal Access

Universal Access on the Ubuntu operating system enables you to configure your computer to suit your physical and cognitive needs.

To use Universal Access, do the following:

1. Open the system menu from the top-right corner and click **Settings**.
2. Click **Universal Access**.
3. Choose the appropriate tool by following the instructions on the screen.

Please see the gnome documentation for more details on the available features:
https://help.gnome.org/users/gnome-help/stable/a11y.html.en

Screen resolution

You can make the text and images on your screen easier to read by adjusting the screen resolution of your computer.

To adjust the screen resolution, do the following:

1. Go to **Settings → Devices → Displays**.

2. Follow the on-screen instructions.

Note: Setting the resolution too low might prevent some items from fitting on the screen.

Industry-standard connectors

Your computer provides industry-standard connectors that enable you to connect assistive devices.

For more information about the location and function of each connector, see “Hardware locations” on page 1.

TTY/TDD conversion modem

Your computer supports the use of a text telephone (TTY) or the telecommunications device for the deaf (TDD) conversion modem. The modem must be connected between your computer and a TTY/TDD telephone. Then, you can type a message on your computer and send it to the telephone.

Documentation in accessible formats

Lenovo provides electronic documentation in accessible formats, such as properly tagged PDF files or HyperText Markup Language (HTML) files. Lenovo electronic documentation is developed to ensure that visually impaired users can read the documentation through a screen reader. Each image in the documentation also includes adequate alternative text so that visually impaired users can understand the image when they use a screen reader.

Cleaning your computer

Attention: Do not open your computer or attempt any repair before reading and understanding the “Read this first: Important safety information” on page iii. Properly remove or install your computer cover. See Chapter 7 “Hardware removal and installation” on page 51.

CAUTION:
Remove any media from the drives and turn off all connected devices and the computer. Then, disconnect all power cords from electrical outlets and disconnect all cables that are connected to the computer.

It is a good practice to clean your computer periodically to protect the surfaces and ensure trouble-free operation. Use only mild cleaning solutions and a damp cloth to clean the painted surfaces of the computer.

Dust buildup compounds problems associated with glare, so remember to clean the screen periodically. Wipe the screen surface gently with a soft, dry cloth, or blow on the screen to remove grit and other loose particles. Depending on the type of the screen, moisten a soft, lint-free cloth with an LCD cleaner or liquid glass cleaner and then wipe the screen surface.

Maintenance

With appropriate care and maintenance, your computer will serve you reliably. This section provides instructions on how to maintain your computer so that it can keep working in better condition.

Basic maintenance tips

Here are some basic points about keeping your computer functioning properly:

- Keep your computer in a clean, dry environment. Ensure that the computer rests on a flat, steady surface.
- Do not cover any of air vents. These air vents provide airflow to keep your computer from overheating.
- Keep food and drinks away from all parts of your computer. Food particles and spills might make the keyboard and mouse stick and unusable.

- Do not get the power switches or other controls wet. Moisture can damage these parts and cause an electrical hazard.
- Always disconnect a power cord by grasping the plug instead of the cord.

Good maintenance practices

By performing a few good maintenance practices, you can maintain good computer performance, protect your data, and be prepared in case of a computer failure.

- Empty your recycle bin on a regular basis.
- Clean out your Inbox, Sent Items, and Deleted Items folders in your e-mail application on a regular basis.
- Back up critical data regularly on removable media memory, such as discs and USB storage devices, and store the removable media in a safe location. The frequency of making backup copies depends on how critical the data is to you or your business.
- Back up your data on the storage drive regularly.
- Keep your computer software, device drivers, and operating system up-to-date. See “Keeping your computer current” on page 22.
- Keep a log book. Entries might include major software or hardware changes, device-driver updates, intermittent problems and what you did to resolve them, and other issues you might have experienced. The cause of a problem might be change in hardware, change in software, or any other actions that might have taken place. A log book can help you or a Lenovo technician determines the cause of a problem.

Keeping your computer current

In most cases, it is a good practice to have the most up-to-date operating system update patches, software programs, and device drivers. This section provides instructions on how to get the latest updates for your computer.

Getting the latest system updates

To get the latest system updates for your computer, ensure that your computer is connected to the Internet and do the following:

1. Launch the Software Utility.
2. Go to the updates tab.
3. Choose **Update**.

Moving your computer

Before moving your computer, take the following precautions:

1. Back up your data on the storage drive. See “Good maintenance practices” on page 22.
2. Remove any media from the drives and turn off all connected devices and the computer. Then, disconnect all power cords from electrical outlets and disconnect all cables that are connected to the computer.
3. If you saved the original shipping cartons and packing materials, use them to pack the units. If you are using different cartons, cushion the units to avoid damage.

Moving your computer to another country or region

When you move your computer to another country or region, you must take local electrical standards into consideration. If the local electrical outlet style is different from the type you are using, use either an electrical plug adapter or a new power cord. To purchase such items, contact the Lenovo Customer Support Center.

For a list of Lenovo Support phone numbers, go to https://pcsupport.lenovo.com/supportphonelist. If you cannot find the support telephone number for your country or region, contact your Lenovo reseller.

Chapter 4. Security

This chapter provides information about how to protect your computer from unauthorized use.

Locking your computer

This section provides instructions on how to lock your computer with the locking devices to keep your computer safe.

Locking the computer cover

Locking the computer cover helps prevent unauthorized people from gaining access to the inside of your computer. Your computer comes with a padlock loop so that the computer cover cannot be removed when a padlock is installed.

Note: The computer hardware might look slightly different from the illustration.

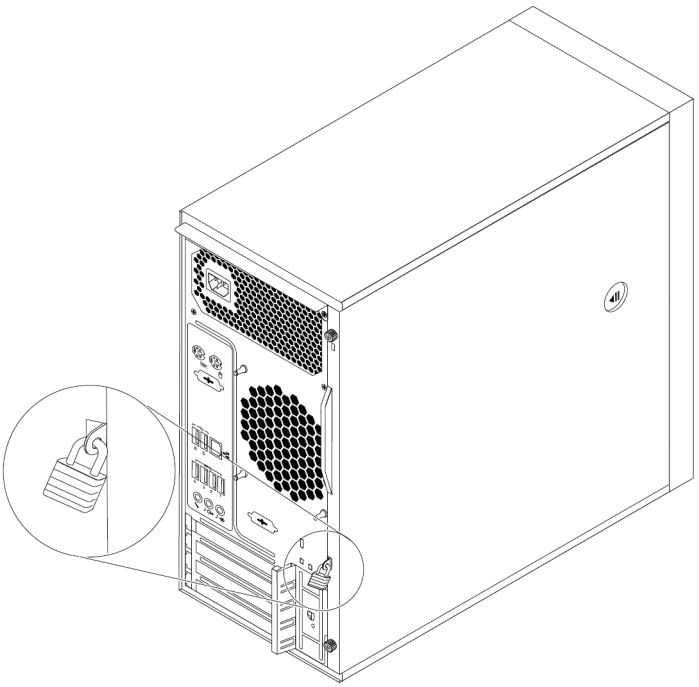

Figure 7. Installing a padlock

Attaching a Kensington-style cable lock

You can use a Kensington-style cable lock to secure your computer to a desk, table, or other non-permanent fixture. The cable lock attaches to the security-lock slot at the rear of your computer. Depending on the type selected, the cable lock can be operated with a key or combination. The cable lock also locks the buttons used to open the computer cover. This is the same type of lock used with many notebook computers. You can order such a cable lock directly from Lenovo by searching for *Kensington* at: http://www.lenovo.com/support

Note: The computer hardware might look slightly different from the illustration.

© Copyright Lenovo 2020, 2023

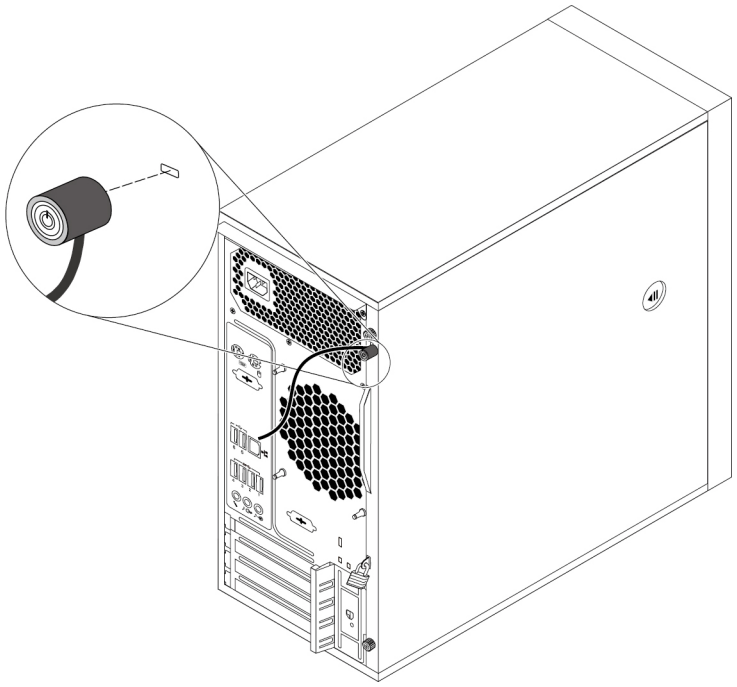

Figure 8. Kensington-style cable lock

Viewing and changing security settings in the Setup Utility program

To view and change security settings in the Setup Utility program, do the following:

1. Start the Setup Utility program. See “Starting the Setup Utility program” on page 29.
2. Select **Security**.
3. Follow the instructions on the right side of the screen to view and change security settings. You can refer to “Using the Setup Utility program” on page 29 to get basic information about some major security settings.
4. To save settings and exit the Setup Utility program, press F10 or Fn+F10 (depending on the keyboard settings). Then, select **Yes** in the window displayed, and press Enter.

Using passwords and user accounts

You can use BIOS passwords and user accounts to prevent unauthorized access to your computer and data.

- To use BIOS passwords, see “Using BIOS passwords” on page 31.
- To use user accounts, do the following:
    1. Open the system menu from the top-right corner and click **Settings**.
    2. Choose **Users**.
    3. Follow the instructions on the screen. You might need to unlock the settings to be able to add a new user account.

Using fingerprint authentication

If your keyboard has a fingerprint reader, you can use fingerprint authentication to replace passwords for simple and secure user access.

To use fingerprint authentication, use the fingerprint enrol tool provided.

1. Open the system menu from the top-right corner and click **Settings**.
2. Click **Users**.
3. Click **Fingerprint Login** and follow the on-screen instructions.

Using the cover presence switch

The cover presence switch prevents your computer from logging in to the operating system when the computer cover is not properly installed or closed.

To use the cover presence switch, enable the cover-presence-switch connector on the system board first. To achieve this, do the following:

1. Start the Setup Utility program. See “Starting the Setup Utility program” on page 29.
2. Select **Security → Chassis Intrusion Detection** and press Enter.
3. Select **Enabled** and press Enter.
4. To save settings and exit the Setup Utility program, press F10 or Fn+F10 (depending on the keyboard settings), select **Yes** in the window displayed, and press Enter. The cover-presence-switch connector on the system board is enabled.

The cover presence switch starts functioning. If the switch detects that the computer cover is not correctly installed or closed, an error message is displayed when you turn on the computer. To fix the error and log in to the operating system, do the following:

1. Properly remove or install your computer cover. See Chapter 7 “Hardware removal and installation” on page 51.
2. Start and then exit the Setup Utility program. See “Starting the Setup Utility program” on page 29 and “Exiting the Setup Utility program” on page 34.

Using firewalls

A firewall can be hardware, software, or a combination of both depending on the level of security required. Firewalls work on a set of rules to determine which inbound and outbound connections are authorized. If your computer is preinstalled with a firewall program, it helps protect against computer Internet security threats, unauthorized access, intrusions, and Internet attacks. It also protects your privacy. For more information about how to use the firewall program, refer to the help system of your firewall program.

Using the Smart USB Protection function

The Smart USB Protection function is a security function that helps prevent data from being copied from the computer to USB storage devices connected to the computer. You can set the Smart USB Protection function to one of the following modes:

- **Disabled** (default setting): You can use the USB storage devices without limitation.
- **Read Only**: You cannot copy data from the computer to the USB storage devices. However, you can access or modify data on the USB storage devices.
- **No Access**: You cannot access the USB storage devices from the computer.

To configure the Smart USB Protection function, do the following:

1. Start the Setup Utility program. See “Starting the Setup Utility program” on page 29.
2. Select **Security → Smart USB Protection** and press Enter.

3. Select the desired setting and press Enter.
4. To save settings and exit the Setup Utility program, press F10 or Fn+F10 (depending on the keyboard settings). Then, select **Yes** in the window displayed, and press Enter.

Computrace Agent software embedded in firmware (for selected models)

The Computrace Agent software is an IT asset management and computer theft recovery solution. The software detects if changes have been made on the computer, such as hardware, software, or the computer call-in location. You might have to purchase a subscription to activate the Computrace Agent software.

Trusted Platform Module (TPM)

TPM is a secure cryptoprocessor that stores cryptographic keys, which in turn protects information stored in your computer.

Intel BIOS guard

The BIOS guard module cryptographically verifies all the BIOS updates to the system BIOS flash. Therefore, the malware is blocked from attacking the BIOS.

Chapter 5. Advanced configuration

This chapter provides information to help you further configure the computer.

Using the Setup Utility program

The Setup Utility program is used to view and change the configuration settings of your computer. This section provides information about only the major configuration settings available in the program.

Note: The operating system settings might override any similar settings in the Setup Utility program.

Starting the Setup Utility program

To start the Setup Utility program, do the following:

1. Turn on or restart your computer.
2. Before the operating system starts up, repeatedly press and release F1 or Fn+F1 (depending on the keyboard settings). Based on the Setup Utility display mode setting, one of the following situations occurs:
   - Text mode: The Setup Utility program opens.
   - Graphic mode (available on some models): The start screen is displayed. Then, select **Setup** and press Enter to open the Setup Utility program.

   Note: If a BIOS password has been set, the Setup Utility program will not open until you enter the correct password. For more information, see “Using BIOS passwords” on page 31.

To view and change the configuration settings, follow the instructions on the screen.

Changing the display mode of the Setup Utility program

You can use the Setup Utility program in the graphic mode or the text mode according to your needs.

- Text mode: The keys on the keyboard used to perform various tasks are displayed at the bottom of the screen.

  Note: The Serial Port Console Redirection item is available only in the text mode.
- Graphic mode (available on some models): In addition to the keyboard, you also can use the mouse to make selections.

To change the display mode of the Setup Utility program, do the following:

1. Start the Setup Utility program. See “Starting the Setup Utility program” on page 29.
2. From the main interface, select **Setup mode select** and press Enter.
3. Select **Graphic** or **Text** and press Enter.
4. To save settings and exit the Setup Utility program, press F10 or Fn+F10 (depending on the keyboard settings), select **Yes** in the window displayed, and press Enter.

Changing the display language of the Setup Utility program

The Setup Utility program supports three display languages: English, French, and simplified Chinese.

To change the display language of the Setup Utility program, do the following:

© Copyright Lenovo 2020, 2023

1. Start the Setup Utility program. See “Starting the Setup Utility program” on page 29.
2. From the main interface, locate **System Language** and press Enter.
3. Select the display language according to your needs.

Enabling or disabling a device

This section provides information about how to enable or disable user access to hardware devices (such as USB connectors or storage drives).

To enable or disable a device, do the following:

1. Start the Setup Utility program. See “Starting the Setup Utility program” on page 29.
2. Select **Devices**.
3. Select the device you want to enable or disable and press Enter.
4. Select the desired setting and press Enter.
5. To save settings and exit the Setup Utility program, press F10 or Fn+F10 (depending on the keyboard settings). Then, select **Yes** in the window displayed, and press Enter.

Enabling or disabling the automatic power-on of your computer

The Automatic Power On item in the Setup Utility program provides various options for you to make your computer start up automatically.

To enable or disable the Automatic Power On features, do the following:

1. Start the Setup Utility program. See “Starting the Setup Utility program” on page 29.
2. Select **Power → Automatic Power On** and press Enter.
3. Select the feature you want to enable or disable and press Enter.
4. Select the desired setting and press Enter.
5. To save settings and exit the Setup Utility program, press F10 or Fn+F10 (depending on the keyboard settings). Then, select **Yes** in the window displayed, and press Enter.

Enabling or disabling the ErP LPS compliance mode

Lenovo computers meet the eco-design requirements of the ErP Lot 3 regulation. For more information, go to:
https://www.lenovo.com/ecodeclaration

You can enable the ErP LPS compliance mode in the Setup Utility program to reduce the consumption of electricity when your computer is off or in sleep mode.

To enable or disable the ErP LPS compliance mode, do the following:

1. Start the Setup Utility program. See “Starting the Setup Utility program” on page 29.
2. Select **Power → Enhanced Power Saving Mode** and press Enter.
3. Select **Enabled** or **Disabled** depending on your needs, and then press Enter. If you select **Enabled**, you also need to disable the Wake on LAN feature. See “Enabling or disabling the automatic power-on of your computer” on page 30.
4. To save settings and exit the Setup Utility program, press F10 or Fn+F10 (depending on the keyboard settings). Then, select **Yes** in the window displayed, and press Enter.

When the ErP LPS compliance mode is enabled, you can wake up your computer by doing one of the following:

- Press the power button.
- Enable the Wake Up on Alarm feature to make your computer wake up at a set time. See “Enabling or disabling the automatic power-on of your computer” on page 30.
- Enable the After Power Loss feature to make your computer wake up when the power supply resumes after a sudden loss of electricity.

  To enable the After Power Loss feature, do the following:

  1. Start the Setup Utility program. See “Starting the Setup Utility program” on page 29.
  2. Select **Power → After Power Loss** and press Enter.
  3. Select **Power On** and press Enter.
  4. To save settings and exit the Setup Utility program, press F10 or Fn+F10 (depending on the keyboard settings). Then, select **Yes** in the window displayed, and press Enter.

Enabling or disabling the configuration change detection

With the configuration-change detection enabled, if the POST detects configuration changes of some hardware devices (such as storage drives or memory modules), an error message is displayed.

To enable or disable the configuration change detection, do the following:

1. Start the Setup Utility program. See “Starting the Setup Utility program” on page 29.
2. Select **Security → Configuration Change Detection** and press Enter.
3. Select the desired setting and press Enter.
4. To save settings and exit the Setup Utility program, press F10 or Fn+F10 (depending on the keyboard settings). Then, select **Yes** in the window displayed, and press Enter.

To bypass the error message and log in to the operating system, do one of the following:

- Press F2 or Fn+F2 (depending on the keyboard settings).
- Start and then exit the Setup Utility program. See “Starting the Setup Utility program” on page 29 and “Exiting the Setup Utility program” on page 34.

Changing the BIOS settings before installing a new operating system

BIOS settings vary by operating system. Change the BIOS settings before installing a new operating system.

To change the BIOS settings, do the following:

1. Start the Setup Utility program. See “Starting the Setup Utility program” on page 29.
2. From the main interface, select **Exit → OS Optimized Defaults** and press Enter.
3. Depending on the operating system to be installed, do one of the following:
   - To install the Windows 10 (64-bit) operating system, select **Enabled** and press Enter.
   - To install a Linux based operating system, select **Disabled** and press Enter.
4. Select **Yes** in the window displayed and press Enter to confirm your selection.
5. To save settings and exit the Setup Utility program, press F10 or Fn+F10 (depending on the keyboard settings). Then, select **Yes** in the window displayed, and press Enter.

Using BIOS passwords

By using the Setup Utility program, you can set passwords to prevent unauthorized access to your computer and data.

You do not have to set any passwords to use your computer. However, using passwords improves computer security. If you decide to set any passwords, read the following topics.

Password types

The following types of passwords are available in the Setup Utility program:

- Power-on password

  When a power-on password is set, you are prompted to enter a valid password each time the computer is turned on. The computer cannot be used until the valid password is entered.

- Administrator password

  Setting an administrator password deters unauthorized users from changing configuration settings. If you are responsible for maintaining the configuration settings of several computers, you might want to set an administrator password.

  When an administrator password is set, you are prompted to enter a valid password each time you try to access the Setup Utility program. The Setup Utility program cannot be accessed until a valid password is entered.

  If both the power-on password and administrator password are set, you can enter either password. However, you must use your administrator password to change any configuration settings.

- Hard disk password

  Setting a hard disk password prevents unauthorized access to the data on the internal storage drive (such as a hard disk drive). When a hard disk password is set, you are prompted to enter a valid password each time you try to access the storage drive.

  Notes:

  – Even if the storage drive is removed from one computer and installed in another, the hard-disk password is still valid.

  – If the hard disk password is forgotten, there is no way to reset the password or recover data from the storage drive.

Password considerations

A password can be any combination of up to 64 alphabetic and numeric characters. For security reasons, it is recommended to use a strong password that cannot be easily compromised.

Note: The Setup Utility program passwords are case-sensitive.

To set a strong password, consider the following guidelines:

- Have at least eight characters in length
- Contain at least one alphabetic character and one numeric character
- Not be your name or your user name
- Not be a common word or a common name
- Be significantly different from your previous passwords

Setting, changing, or deleting a password

To set, change, or delete a password, do the following:

1. Start the Setup Utility program. See “Starting the Setup Utility program” on page 29.
2. Select **Security**.
3. Depending on the password type, select **Set Power-On Password**, **Set Administrator Password**, or **Hard Disk Password** and press Enter.

4. Follow the instructions on the right side of the screen to set, change, or delete a password.

   Note: A password can be any combination of up to 64 alphabetic and numeric characters. For more information, see “Password considerations” on page 32.

5. To save settings and exit the Setup Utility program, press F10 or Fn+F10 (depending on the keyboard settings). Then, select **Yes** in the window displayed, and press Enter.

Erasing lost or forgotten passwords (clearing CMOS)

This section provides instructions on how to erase lost or forgotten passwords, such as a user password.

Note: The instructions in this section do not apply to the hard disk password.

To erase a lost or forgotten password, do the following:

1. Remove any media from the drives and turn off all connected devices and the computer. Then, disconnect all power cords from electrical outlets and disconnect all cables that are connected to the computer.
2. Remove the computer cover. See Chapter 7 “Hardware removal and installation” on page 51.
3. Locate the Clear Complementary Metal Oxide Semiconductor (CMOS) /Recovery jumper on the system board. See “Hardware locations” on page 1.
4. Move the jumper from the standard position (pin 1 and pin 2) to the maintenance position (pin 2 and pin 3).
5. Reinstall the computer cover and connect the power cord. See Chapter 7 “Hardware removal and installation” on page 51.
6. Turn on the computer and leave it on for approximately 10 seconds. Then, turn off the computer by holding the power button for approximately five seconds.
7. Repeat step 1 and step 2.
8. Move the Clear CMOS /Recovery jumper back to the standard position (pin 1 and pin 2).
9. Reinstall the computer cover and connect the power cord.
10. Turn on the computer and the monitor. When the logo screen is displayed, press F1 or Fn+F1.
11. To prevent data loss, ensure that BIOS settings are restored to an earlier point.

Selecting a startup device

If your computer does not start up from the expected device, you can either change the startup device sequence or select a temporary startup device.

Changing the startup device sequence permanently

To change the startup device sequence permanently, do the following:

1. Depending on the type of the storage device, do one of the following:
   - If the storage device is internal, go to step 2.
   - If the storage device is a disc, ensure that your computer is turned on. Then, insert the disc into the optical drive.
   - If the storage device is an external device other than a disc, connect the storage device to the computer.
2. Start the Setup Utility program. See “Starting the Setup Utility program” on page 29.
3. Select **Startup**.
4. Follow the instructions on the right side of the screen to change the startup device sequence.

5. To save settings and exit the Setup Utility program, press F10 or Fn+F10 (depending on the keyboard settings). Then, select **Yes** in the window displayed, and press Enter.

Selecting a temporary startup device

Note: Not all discs and storage drives are bootable.

To select a temporary startup device, do the following:

1. Depending on the type of the storage device, do one of the following:
   - If the storage device is internal, go to step 2.
   - If the storage device is a disc, ensure that your computer is turned on. Then, insert the disc into the optical drive.
   - If the storage device is an external device other than a disc, connect the storage device to the computer.
2. Turn on or restart the computer. Before the OS starts up, repeatedly press and release F12 or Fn+F12 (depending on the keyboard settings) until Startup Device Menu is displayed.
3. Select the desired storage device and press Enter. The computer then starts up from the device you select.

If you want to select a permanent startup device, select **Enter Setup** on Startup Device Menu and press Enter to start the Setup Utility program. For more information about how to select a permanent startup device, see “Changing the startup device sequence permanently” on page 33.

Changing the fan speed level

The Fan Control Stepping item enables you to adjust the thermal performance of your computer. From level 1 to level 7, a higher fan speed level indicates better thermal performance with more noise.

To change the fan speed level, do the following:

1. Start the Setup Utility program. See “Starting the Setup Utility program” on page 29.
2. Select **Power → Fan Control Stepping** and press Enter.
3. Select a fan speed level and press Enter.
4. To save settings and exit the Setup Utility program, press F10 or Fn+F10 (depending on the keyboard settings), select **Yes** in the window displayed, and press Enter.

Exiting the Setup Utility program

To exit the Setup Utility program, do one of the following:

- If you want to save the new settings, press F10 or Fn+F10 (depending on the keyboard settings). Then, select **Yes** in the window displayed and press Enter.
- If you do not want to save the new settings, select **Exit → Discard Changes and Exit** and press Enter. Then, select **Yes** in the window displayed and press Enter.

Updating and recovering the BIOS

The BIOS is the first program that the computer runs when you turn on the computer. The BIOS initializes the hardware components and loads the operating system and other programs.

Updating the BIOS

When you install a new program, hardware device, or device driver, you might be informed to update the BIOS. You can update the BIOS from your operating system or a flash update disc (available only on some models).

Lenovo provides BIOS updates using the LVFS service and updates should be delivered as part of the standard system update procedure.

To manually install a BIOS update, do the following:

1. Go to https://support.lenovo.com.
2. To update the BIOS from your operating system, download the flash BIOS update driver according to your operating system version. To update the BIOS from a flash update disc, download the ISO image version (used to create a flash update disc). Then, download the installation instructions for the flash BIOS update driver.
3. Print the installation instructions you download and follow the instructions to update the BIOS.

   Note: If you want to update the BIOS from a flash update disc, the installation instructions might not provide the instructions on how to record the update disc. See “Recording a disc” on page 16.

Recovering from a BIOS update failure

To recover from a BIOS update failure, do the following:

1. Remove any media from the drives and turn off all connected devices and the computer. Then, disconnect all power cords from electrical outlets and disconnect all cables that are connected to the computer.
2. Remove the computer cover. See Chapter 7 “Hardware removal and installation” on page 51.
3. Locate the Clear CMOS /Recovery jumper on the system board. See “Hardware locations” on page 1.
4. Remove any parts and cables that impede your access to the Clear CMOS /Recovery jumper.
5. Move the jumper from the standard position (pin 1 and pin 2) to the maintenance position (pin 2 and pin 3).
6. Reinstall the parts and cables that were removed.
7. Reinstall the computer cover and reconnect any cables that were disconnected. See Chapter 7 “Hardware removal and installation” on page 51.
8. Turn on the computer and insert the BIOS update disc into the optical drive. Wait a few minutes. The recovery process begins. After the recovery process is completed, your computer will shut down automatically.

   Note: If the computer does not start up from the disc, select the disc as the startup device. See “Selecting a temporary startup device” on page 34.
9. Repeat steps 1–4.
10. Move the Clear CMOS /Recovery jumper back to the standard position (pin 1 and pin 2).
11. Repeat step 6 and step 7.
12. Turn on the computer and the monitor. When the logo screen is displayed, press F1 or Fn+F1.
13. To prevent data loss, ensure that BIOS settings are restored to an earlier point before the BIOS update.

Configuring RAID

This section provides information about storage drive requirements for RAID levels, and instructions on how to configure RAID for your computer. Depending on your computer model and configuration, you can configure RAID using one of the following utilities:

- Intel Rapid Storage Technology enterprise (RSTe) configuration utility
- AVAGO MegaRAID Configuration Utility
- Intel Virtual RAID on CPU configuration utility

An Introduction to RAID

RAID is a technology that provides increased storage functions and reliability through redundancy.

When a group of independent physical storage drives is set up to use RAID technology, they are in a RAID array. This array distributes data across multiple storage drives, but the array appears to the host computer as one single storage unit. Creating and using RAID arrays provides high performance, such as the expedited I/O performance, because several drives can be accessed simultaneously.

RAID drive groups configured according to certain RAID levels also improve data storage reliability and fault tolerance compared with single-drive storage systems. Data loss resulting from a drive failure can be prevented by reconstructing missing data from the remaining drives.

Note: For RAID 0, the missing data resulting from a drive failure cannot be reconstructed.

Configuring RAID with Intel RSTe

If your computer comes with the Intel RSTe configuration utility, you can follow the sections below to configure RAID with Intel RSTe.

Storage drive requirements for RAID levels

Your computer supports the following RAID levels:

- RAID 0: striped disk array
  - Consists of at least two SATA storage drives
  - Supported strip size: 4 KB, 8 KB, 16 KB, 32 KB, 64 KB, or 128 KB
  - Better performance without fault tolerance
- RAID 1: mirrored disk array
  - Consists of two SATA storage drives
  - Improved reading performance and 100% redundancy
- RAID 10: striped and mirrored disk array (a combination of RAID 0 and RAID 1)
  - Consists of four SATA storage drives
  - Supported strip size: 4 KB, 8 KB, 16 KB, 32 KB, or 64 KB
- RAID 5: block-level striped disk array with distributed parity
  - Consists of at least three SATA storage drives
  - Supported strip size: 16 KB, 32 KB, 64 KB, or 128 KB
  - Better performance and fault tolerance

Creating a RAID volume

Attention: All the existing data stored on the selected drives will be erased while the RAID volume is being created.

To create a RAID volume, do the following:

1. Enable **RAID** by doing the following:
   a. Start the Setup Utility program. See “Starting the Setup Utility program” on page 29.
   b. Select **Devices → PCH SATA Configuration** and press Enter.
   c. Select **Configure SATA as** and press Enter. Then, select **RAID** and press Enter.
   d. To save settings and exit the Setup Utility program, press F10 or Fn+F10 (depending on the keyboard settings), select **Yes** in the window displayed, and press Enter.
2. Start the Setup Utility program again. See “Starting the Setup Utility program” on page 29.
3. Select **Advanced → Intel RSTe SATA Controller** and press Enter.
4. Select **Create RAID Volume** and press Enter. The Create RAID Volume window is displayed.
5. Select and configure the options one by one.
   a. **Name**: You can use the default name **Volume0** or type a preferred name for the RAID volume.
   b. **RAID Level**: You can set the RAID level to one of the following:
      - **RAID0**
      - **RAID1**
      - **RAID10**
      - **RAID5**

      Note: Some of the RAID levels might not be displayed because the number of installed SATA storage drives varies.
   c. **Select Disks**: Select a storage drive and press Enter. Then, select **X** and press Enter to add it to a group.
   d. **Strip Size** (if applicable): Select a strip size and press Enter.
   e. **Capacity**: Customize the capacity of the RAID volume. The default RAID volume is the largest value.
6. Select **Create Volume** and press Enter to create a RAID volume.
7. To save settings and exit the Setup Utility program, press F10 or Fn+F10 (depending on the keyboard settings), select **Yes** in the window displayed, and press Enter.

Viewing the information about a RAID volume

To view the information about a RAID volume, do the following:

1. Start the Setup Utility program. See “Starting the Setup Utility program” on page 29.
2. Select **Advanced → Intel RSTe SATA Controller** and press Enter.
3. Select **RAID Volumes** and press Enter.
4. Select a RAID volume and press Enter to view the detailed information.

Deleting a RAID volume

Attention: All the existing data stored on the selected drives will be erased after you delete RAID volumes.

To delete a RAID volume, do the following:

1. Start the Setup Utility program. See “Starting the Setup Utility program” on page 29.
2. Select **Advanced → Intel RSTe SATA Controller** and press Enter.

3. Under **RAID Volumes**, select the RAID volume that you want to delete and press Enter. The RAID VOLUME INFO window is displayed.
4. Select **Delete** under **Volume Actions** and press Enter. When prompted, select **Yes** and press Enter to confirm the deletion of the selected RAID volume.
5. To save settings and exit the Setup Utility program, press F10 or Fn+F10 (depending on the keyboard settings), select **Yes** in the window displayed, and press Enter.

Configuring RAID with AVAGO MegaRAID Configuration Utility

To configure RAID with AVAGO MegaRAID Configuration Utility, ensure that:

- An AVAGO MegaRAID adapter is installed in your computer.
- The storage drives used for RAID configuration are connected to the installed AVAGO MegaRAID adapter instead of the system board.

Storage drive requirements for RAID levels

Your computer supports the following RAID levels:

- RAID 0: striped disk array
  - Consists of at least two SATA or Serial Attached SCSI (SAS) storage drives
  - Supported strip size: 64 KB, 128 KB, 256 KB, 512 KB, or 1 MB
  - Better performance without fault tolerance
- RAID 1: mirrored disk array
  - Consists of two or four SATA or SAS storage drives
  - Improved read performance and 100% redundancy
- RAID 10: striped and mirrored disk array (a combination of RAID 0 and RAID 1)
  - Consists of four SATA or SAS storage drives
  - Data being striped across storage drive groups
  - Provides both high data transfer rates and complete data redundancy
- RAID 5: block-level striped disk array with distributed parity
  - Consists of at least three SATA or SAS storage drives
  - Supported strip size: 64 KB, 128 KB, 256 KB, 512 KB, or 1 MB
  - Better performance and fault tolerance
  - Available only on some models of AVAGO MegaRAID adapters
- RAID 6: block-level striped disk array with dual distributed parity
  - Consists of at least four SATA or SAS storage drives
  - Supported strip size: 64 KB, 128 KB, 256 KB, 512 KB, or 1 MB
  - Better performance and fault tolerance that can stand up to loss of two storage drives
  - Available only on some models of AVAGO MegaRAID adapters

Creating a RAID volume

Attention: All the existing data stored on the selected drives will be erased while the RAID volume is being created.

To create a RAID volume, do the following:

1. Start the Setup Utility program. See “Starting the Setup Utility program” on page 29.

2. Select **Advanced → AVAGO MegaRAID Configuration Utility** and press Enter.
3. Select **Main Menu** and press Enter.
4. Select **Configuration Management** and press Enter.
5. Select **Create Virtual Drive** and press Enter.
6. Select and configure the options one by one.
   a. **Select RAID Level**: You can set the RAID level to one of the following:
      - **RAID0**
      - **RAID1**
      - **RAID5**
      - **RAID6**
      - **RAID10**

      Note: Some of the RAID levels might not be displayed because the number of installed SATA storage drives and the model of the AVAGO MegaRAID adapter vary.
   b. **Select Drives From**: Select **Unconfigured capacity** or **Free capacity** depending on your needs and press Enter.
   c. **Select Drives**: Select a storage drive and press Enter. After selecting all storage drives for creating the RAID volume, select **Apply Changes** and press Enter. When promoted, select **Confirm** and press Enter. Then, select **Yes** and press Enter to save the storage drive selection. Finally, select **OK** and press Enter.
   d. **Virtual Drive Name**: You can type a preferred name for the volume name.
   e. **Strip Size** (if applicable): Select a strip size and press Enter.
7. Select **Save Configuration** and press Enter. When promoted, select **Confirm** and press Enter. Then, select **Yes** and press Enter to confirm the creation of the RAID volume.
8. To save settings and exit the Setup Utility program, press F10 or Fn+F10 (depending on the keyboard settings), select **Yes** in the window displayed, and press Enter.

Viewing the information about a RAID volume

To view the information about a RAID volume, do the following:

1. Start the Setup Utility program. See “Starting the Setup Utility program” on page 29.
2. Select **Advanced → AVAGO MegaRAID Configuration Utility** and press Enter.
3. Select **Main Menu** and press Enter.
4. Select **Virtual Drive Management** and press Enter.
5. Select a RAID volume and press Enter to view the detailed information.

Deleting a RAID volume

Attention: All the existing data stored on the selected drives will be erased after you delete RAID volumes.

To delete a RAID volume, do the following:

1. Start the Setup Utility program. See “Starting the Setup Utility program” on page 29.
2. Select **Advanced → AVAGO MegaRAID Configuration Utility**.
3. Select **Main Menu** and press Enter.
4. Select **Virtual Drive Management** and press Enter.
5. Select the RAID volume that is not needed and press Enter.
6. Under **Operation**, select **Delete Virtual Drive** and press Enter.

7. Select **Go** and press Enter. When prompted, select **Confirm** and press Enter. Then, select **Yes** and press Enter to delete the RAID volume.
8. To save settings and exit the Setup Utility program, press F10 or Fn+F10 (depending on the keyboard settings), select **Yes** in the window displayed, and press Enter.

Configuring RAID with Intel Virtual RAID on CPU

To configure RAID with the Intel Virtual RAID on CPU configuration utility, ensure that:

- An upgrade key module is connected to the Virtual RAID on CPU (VROC) connector on the system board. See “Hardware locations” on page 1.
- M.2 solid-state drives are installed in your computer.

Storage drive requirements for RAID levels

Your computer supports the following RAID levels:

- RAID 0: striped disk array
  - Consists of at least two M.2 solid-state drives
  - Supported strip size: 4 KB, 8 KB, 16 KB, 32 KB, 64 KB, or 128 KB
  - Better performance without fault tolerance
- RAID 1: mirrored disk array
  - Consists of two M.2 solid-state drives
  - Improved reading performance and 100% redundancy
- RAID 10: striped and mirrored disk array (a combination of RAID 0 and RAID 1)
  - Consists of four M.2 solid-state drives
  - Supported strip size: 4 KB, 8 KB, 16 KB, 32 KB, or 64 KB
- RAID 5: block-level striped disk array with distributed parity
  - Consists of at least three M.2 solid-state drives
  - Supported strip size: 16 KB, 32 KB, 64 KB, or 128 KB
  - Better performance and fault tolerance
  - Available only on some models of upgrade key modules

Creating a RAID volume

Attention: All the existing data stored on the selected drives will be erased while the RAID volume is being created.

To create a RAID volume, do the following:

1. Enable **VMD** for the selected M.2 solid-state drives by doing the following:
   a. Start the Setup Utility program. See “Starting the Setup Utility program” on page 29.
   b. Select **Advanced → Intel(R) VMD technology** and press Enter.
   c. Select each menu item and press Enter. Then, select **Enabled** and press Enter.
   d. Select an occupied M.2 solid-state drive slot as you need and press Enter. Then, select **VMD** and press Enter.
   e. To save settings and exit the Setup Utility program, press F10 or Fn+F10 (depending on the keyboard settings), select **Yes** in the window displayed, and press Enter.
2. Start the Setup Utility program again. See “Starting the Setup Utility program” on page 29.

3. Select **Advanced → Intel Virtual RAID on CPU** and press Enter.
4. Select **All Intel VMD Controllers** and press Enter.
5. Select **Create Volumes** and press Enter.
6. Select and configure the options one by one.
   a. **Name**: You can use the default name **Volume0** or type a preferred name for the RAID volume.
   b. **RAID Level**: You can set the RAID level to one of the following:
      - **RAID0**
      - **RAID1**
      - **RAID10**
      - **RAID5**

      Note: Some of the RAID levels might not be displayed because the number of installed M.2 solid-state drives and the model of the upgrade key module vary.
   c. **Select Disks**: Select an M.2 solid-state drive and press Enter. Then, select **X** and press Enter to add it to a group.
   d. **Stripe Size** (if applicable): Select a stripe size and press Enter.
   e. **Capacity**: Customize the capacity of the RAID volume. The default RAID volume is the largest value.
7. Select **Create Volume** and press Enter to create a RAID volume.
8. To save settings and exit the Setup Utility program, press F10 or Fn+F10 (depending on the keyboard settings), select **Yes** in the window displayed, and press Enter.

Viewing the information about a RAID volume

To view the information about a RAID volume, do the following:

1. Start the Setup Utility program. See “Starting the Setup Utility program” on page 29.
2. Select **Advanced → Intel Virtual RAID on CPU** and press Enter.
3. Select **RAID Volumes** and press Enter.
4. Select a RAID volume and press Enter to view the detailed information.

Deleting a RAID volume

Attention: All the existing data stored on the selected drives will be erased after you delete RAID volumes.

To delete a RAID volume, do the following:

1. Start the Setup Utility program. See “Starting the Setup Utility program” on page 29.
2. Select **Advanced → Intel Virtual RAID on CPU** and press Enter.
3. Select **Intel VROC Mananged Volumes** and press Enter.
4. Under **Volume Actions**, select **Delete** and press Enter.
5. When prompted, select **Yes** and press Enter to confirm the deletion of the selected RAID volume.
6. To save settings and exit the Setup Utility program, press F10 or Fn+F10 (depending on the keyboard settings), select **Yes** in the window displayed, and press Enter.

Chapter 6. Troubleshooting, diagnostics, and recovery

This chapter provides solutions to resolve your computer problems. Follow the steps in the basic procedure for resolving computer problems, which helps you make good use of the troubleshooting, diagnostics, and recovery information.

Basic procedure for resolving computer problems

It is recommended that you use the following procedure to resolve computer problems you are experiencing:

1. Ensure that:
   a. The cables for all connected devices are connected correctly and securely.
   b. All connected devices that require ac power are connected to properly grounded, functioning electrical outlets.
   c. All connected devices are enabled in the BIOS settings of your computer. See “Enabling or disabling a device” on page 30.

   If these actions do not resolve your problem, continue with the next step.
2. Use an antivirus program to see if your computer has been infected by a virus. If the program detects a virus, remove the virus. If the antivirus program does not resolve your problem, continue with the next step.
3. Go to “Troubleshooting” on page 43 and follow the instructions for the type of problem you are experiencing. If these troubleshooting instructions do not resolve your problem, continue with the next step.
4. Run the diagnostic program. See “Diagnosing problems” on page 49. If the diagnostic program does not resolve your problem, continue with the next step.
5. Recover your operating system.
6. If none of these actions solve your problem, contact the Lenovo Customer Support Center. For a list of Lenovo Support phone numbers, go to http://www.lenovo.com/support/phone. For more information about help, service, and technical assistance, see Chapter 8 “Getting information, help, and service” on page 107.

Troubleshooting

Attention: Do not open your computer or attempt any repair before reading and understanding the “Read this first: Important safety information” on page iii.

Use the troubleshooting information to find solutions to problems that have definite symptoms.

Startup problems

The computer does not start up when you press the power button.

Solutions:

Ensure that:

- The power cord is correctly connected to the rear of the computer and to a working electrical outlet.
- If your computer has a secondary power switch on the rear of the computer, ensure that it is switched on.
- The power indicator on the front of the computer is on.

© Copyright Lenovo 2020, 2023

- The computer voltage matches the voltage available at the electrical outlet for your country or region.

The operating system fails to start up.

Solution:

Ensure that the startup device sequence set in the Setup Utility program includes the device where the operating system resides. Usually, the operating system is on the internal storage drive. For more information, see “Changing the startup device sequence permanently” on page 33.

The computer beeps multiple times before the operating system starts up.

Solution:

Ensure that no keys are stuck.

Audio problems

The audio cannot be heard on the Ubuntu operating system.

Solutions:

- If you are using powered external speakers that have an On/Off control, ensure that:
  - The On/Off control is set to the **On** position.
  - The speaker power cable is connected to a properly grounded, functional ac electrical outlet.
- If your external speakers have a volume control, ensure that the volume is not set too low.
- Click the volume icon in the notification area on the taskbar. Ensure that the mute speakers settings are not selected and none of the volume settings is set too low.
- For some computers that have a front audio panel, ensure that the volume is not set too low.
- Ensure that your external speakers (and headphones, if used) are connected to the correct audio connectors on the computer. Most speaker cables are color-coded to match the connectors.

  Note: When external-speaker or headphone cables are connected to the audio connectors, the internal speaker, if present, is disabled. In most cases, if an audio adapter is installed in one of the expansion slots, the audio function built into the system board is disabled. Therefore, you must use the audio connectors on the audio adapter.
- Ensure that the audio device drivers are correctly installed.

The sound comes from one of the external speakers.

Solutions:

- Ensure that the speaker cable is inserted completely into the connector on the computer.
- Ensure that the cable that connects the left speaker to the right speaker is securely connected.
- Ensure that the balance settings are set correctly.

CD or DVD problems

A CD or DVD does not work.

Solutions:

- Ensure that the power cable and signal cable are securely connected to the drive.
- Ensure that the disc is inserted correctly, with its label up.

- Ensure that the disc you are using is clean. To remove dust or fingerprints, wipe the disc clean with a soft cloth from the center to the outside. Wiping a disc in a circular motion might cause loss of data.
- Ensure that the disc you are using is not scratched or damaged. Try inserting another disc that you know is good. If you cannot read from a known-good disc, you might have a problem with your optical drive or the cabling to your optical drive.
- If you have multiple CD or DVD drives installed (or a combination of CD and DVD drives), try inserting the disc into the other drive. In some cases, only one of the drives is connected to the audio subsystem.

A bootable recovery medium, such as the Product Recovery CD, cannot be used to start your computer.

Solution:

Ensure that the CD or DVD drive is set as the top priority of the Boot Priority Order in the Setup Utility program. Refer to “Selecting a temporary startup device” on page 34 for information about viewing and changing the startup sequence.

Note: On some computer models, the startup sequence is permanently set and cannot be changed.

A black screen is displayed instead of the DVD video.

Solutions:

- Restart the DVD player program.
- Try a lower screen resolution or color depth.
- Close any open files, and then restart the computer.

A DVD movie does not play.

Solutions:

- Ensure that the disc surface is clean and not scratched.
- Check the disc or package for regional coding. You might need to purchase a disc with coding for the region where you are using your computer.

No audio or only an intermittent audio comes out while a DVD movie is playing.

Solutions:

- Check the volume control settings on your computer and on your speakers.
- Ensure that the disc surface is clean and not scratched.
- Check all cable connections to and from the speakers.
- Use the DVD menu for the video to select a different audio track.

The playback is slow or choppy.

Solutions:

- Disable any background programs that are using CPU or memory resources.
- Ensure that video resolution is lower than 1152 x 864 pixels.

A message indicating invalid disc or no disc found is displayed.

Solutions:

- Ensure that the disc is in the drive with the shiny side of the disc facing down.
- Ensure that video resolution is lower than 1152 x 864 pixels.

- Ensure that the DVD or CD is inserted into an appropriate optical drive. For example, do not insert a DVD into a CD-only drive.

Intermittent problems

Intermittent problems refer to the problems occur only occasionally and are difficult to repeat.

Solutions:

- Ensure that all cables and cords are securely connected to the computer and attached devices.
- Ensure that when the computer is on, the fan grill is not blocked (there is air flow around the grill), and the fans are working. If airflow is blocked or the fans are not working, the computer might overheat.
- If Small Computer System Interface (SCSI) devices are installed, ensure that the last external device in each SCSI chain is terminated correctly. For more information, see your SCSI documentation.

Storage drive problems

Some or all storage drives are missing from the Setup Utility program.

Solutions:

- Ensure that the signal cables and power cables for all the storage drives are connected correctly.
- If the computer is installed with SAS storage drives, ensure that the AVAGO MegaRAID adapter is correctly connected.

The computer cannot start up from the correct storage drive or the message "No Operating System Found" is displayed.

Solutions:

- Ensure that the signal cables and power cables for all the storage drives are connected correctly.
- Ensure that the computer starts up from the correct storage drive. Set the storage drive, on which the operating system resides, as the first startup device in the Setup Utility program. Refer to "Changing the startup device sequence permanently" on page 33.

Note: In rare cases, the storage drive with the operating system might get corrupted or damaged. If this problem occurs, replace the storage drive. Refer to Chapter 7 "Hardware removal and installation" on page 51.

Ethernet LAN problems

The computer cannot connect to an Ethernet LAN.

Solutions:

- Connect the cable from the Ethernet connector to the RJ45 connector of the hub.
- Enable the Ethernet LAN feature in the Setup Utility program.
- Enable the Ethernet LAN adapter.
  1. Go to **Settings** and select **Network**.
  2. Ensure the **Ethernet** option is enabled.
- Update or reinstall the Ethernet LAN driver. See "Keeping your computer current" on page 22.
- Install all networking software that is necessary for your network environment. Check with your LAN administrator for the necessary networking software.

- Set the same duplex for the switch port and the adapter. If you configured the adapter for full duplex, ensure that the switch port is also configured for full duplex. Setting the wrong duplex mode might degrade performance, cause data loss, or result in lost connections.

When a Gigabit Ethernet model computer is used at a speed of 1000 Mbps, the Ethernet LAN connection fails or errors occur.

Solution:

Connect the network cable to the Ethernet connector using Category 5 wiring and a 100 BASE-T hub/switch (not 100 BASE-X).

A Gigabit Ethernet model computer should connect to the network at a speed of 1000 Mbps but at only a speed of 100 Mbps.

Solutions:

- Try another cable.
- Set the link partner to auto-negotiate.
- Set the switch to be 802.3ab-compliant (gigabit over copper).

The Wake On LAN feature does not work.

Solution:

Enable the Wake On LAN feature in the Setup Utility program.

Wireless LAN problem

Note: The wireless LAN feature is available only on some models.

The wireless LAN feature does not work.

Solutions:

- Enable the wireless LAN feature in the Setup Utility program.
- Enable the wireless LAN adapter.
  1. Go to **Settings** and select **Wi-Fi**.
  2. Make sure that the toggle at the top of the window is enabled and that airplane mode is disabled.
- Update or reinstall the wireless LAN driver. See “Keeping your computer current” on page 22.

Bluetooth problems

Note: The Bluetooth feature is available only on some models.

The Bluetooth feature does not work.

Solutions:

- Enable the Bluetooth feature in the Setup Utility program.
- Enable the Bluetooth devices. Do the following:
  1. Launch **Settings** and choose **Bluetooth**.
  2. Make sure that Bluetooth is enabled by the toggle button at the top.
  3. Click on each device to enable and start pairing.
  4. You can modify sound settings for the device by clicking on the device and choosing **Sound Settings**.

- Update or reinstall the Bluetooth driver. See “Keeping your computer current” on page 22.

No sound comes from the Bluetooth headset or headphones.

Solution:

Set the Bluetooth headset or headphones as the default device.

1. Exit the application that uses the sound device.
2. Follow the steps above to modify the sound settings for your Bluetooth.
3. Make sure that the volume is set and the device is enabled.

Performance problems

The free storage drive space is insufficient.

Solutions:

Free up the storage drive space.

- Clean out your Inbox, Sent Items, and Deleted Items folders from your e-mail application.
- Clean up your disk.
  1. Launch the **Disk Usage Analyzer** application.
  2. Click on the disk with low free space.
  3. Analyze where space is used and which files you can delete.

The free memory space is insufficient.

Solutions:

- Launch the **System Monitor** application.
- Select and stop any process that you no longer need.
- Install additional memory modules. See Chapter 7 “Hardware removal and installation” on page 51. To purchase memory modules, go to:
  https://www.lenovo.com

Serial connector problem

The serial connector cannot be accessed.

Solutions:

- Connect the serial cable from the serial connector on the computer to the serial device. If the serial device has its own power cord, connect the power cord to a grounded electrical outlet.
- Turn on the serial device and keep the device online.
- Install any programs supplied with the serial device. Refer to the documentation that comes with the serial device for more information.
- If you added one serial-connector adapter, ensure that the adapter is installed correctly.

USB device problems

A USB device cannot be accessed.

Solutions:

- Connect the USB cable from the USB connector to the USB device. If the USB device has its own power cord, connect the power cord to a grounded electrical outlet.
- Turn on the USB device and keep the device online.
- Install any device drivers or programs supplied with the USB device. Refer to the documentation that comes with the USB device for more information.
- Disconnect and reconnect the USB connector to reset the USB device.
- Ensure that the Smart USB Protection function is disabled. To configure the Smart USB Protection function, see “Using the Smart USB Protection function” on page 27.

Software and driver problems

For some programs, dates cannot be sorted in correct order.

Solution:

Some programs developed before the year 2000 use only the last two digits of a year to sort dates, assuming the first two digits are 19. Consequently, dates cannot be sorted in correct order nowadays. Check with your software manufacturer to see if any updates are available. Many software manufacturers make updates available from the World Wide Web.

Some programs do not work as expected.

Solutions:

1. Check whether the problem is caused by a program.
   a. Ensure that the software is compatible with your computer. Refer to the information supplied with the software for more information.
   b. Verify that other software works properly on your computer.
   c. Verify that the software you are using works on another computer.
2. If the problem is caused by a program:
   - Refer to the printed documentation that comes with the program or the help system of the program for troubleshooting information.
   - Update the program. See “Keeping your computer current” on page 22.
   - Uninstall the program and then reinstall it. To download a program that is preinstalled on your computer, go to https://support.lenovo.com and follow the instructions on the screen.

A device does not work properly due to device driver problems.

Solution:

Update the device driver. See “Keeping your computer current” on page 22.

Diagnosing problems

Many computer problems can be solved without outside assistance. If you experience a problem with your computer, the first place to start is the troubleshooting information in your computer documentation. If you suspect a software problem, see the documentation, including readme files and help information systems, that come with the operating system or program.

Hardware diagnostics

The hardware diagnostics function enables your computer to monitor hardware components in real time for potential issues or errors without impacting the performance. When an issue or error is detected, hardware diagnostic information is presented in either of the following ways:

- If your computer has the four-digit diagnostic display installed, an error code is displayed on the four- digit diagnostic display on the front of the computer. Check the error code at the following Web site: https://thinkworkstationsoftware.com/diags
- If the signal diagnostic LED indicator is available on your computer, the diagnostic LED indicator blinks to indicate that an issue or error is detected. Then you can use the Lenovo PC Diagnostics application installed in your smartphone to transfer the error code from the computer to the smartphone for further analysis. The application is available for download at both Google Play and iTunes App Store.

The hardware diagnostics function is enabled on your computer by default. If you want to disable the function, do the following:

1. Start the Setup Utility program. See “Starting the Setup Utility program” on page 29.
2. From the main interface, select **Advanced → Diagnostics**, and then press Enter.
3. Select **Real-time Diagnostics Monitoring** and press Enter. Then select **Disabled** and press Enter.
4. To save settings and exit the Setup Utility program, press F10 or Fn+F10 (depending on the keyboard settings). Then, select **Yes** in the window displayed, and press Enter.

Chapter 7. Hardware removal and installation

This chapter provides instructions on how to remove and install hardware for your computer.

Handling static-sensitive devices

Do not open the static-protective package containing the new part until the defective part has been removed and you are ready to install the new part. Static electricity, although harmless to you, can seriously damage computer components and options.

When you handle options and other computer components, take these precautions to avoid static-electricity damage:

- Limit your movement. Movement can cause static electricity to build up around you.
- Always handle options and other computer components carefully. Handle PCI/PCIe cards, memory modules, system boards, and microprocessors by the edges. Never touch any exposed circuitry.
- Prevent others from touching the options and other computer components.
- Touch the static-protective package containing the part to a metal expansion-slot cover or other unpainted metal surface on the computer for at least two seconds. This reduces static electricity from the package and your body before you install or replace a new part.
- When possible, remove the new part from the static-protective package, and install it directly in the computer without setting the part down. When this is not possible, place the static-protective package on a smooth, level surface and place the part on the package.
- Do not place the part on the computer cover or other metal surface.

Preparing your computer and removing the computer cover

Attention: Do not open your computer or attempt any repair before reading and understanding the “Read this first: Important safety information” on page iii.

CAUTION:



Avoid contact with hot components inside the computer. During operation, some components become hot enough to burn the skin. Before you open the computer cover, turn off the computer, disconnect power, and wait approximately 10 minutes for the components to cool.

Before installing or removing any hardware component in your computer, do the following to prepare your computer and remove the computer cover:

1. Remove any media from the drives and turn off all attached devices and the computer. Then, disconnect all power cords from electrical outlets and disconnect all cables that are connected to the computer.
2. Unlock any locking device that secures the computer cover. See “Locking your computer” on page 25.
3. Remove the two screws that secure the computer cover.
4. Press the cover-release button on the side of the computer and slide the cover to the rear of the computer to remove the cover.

© Copyright Lenovo 2020, 2023

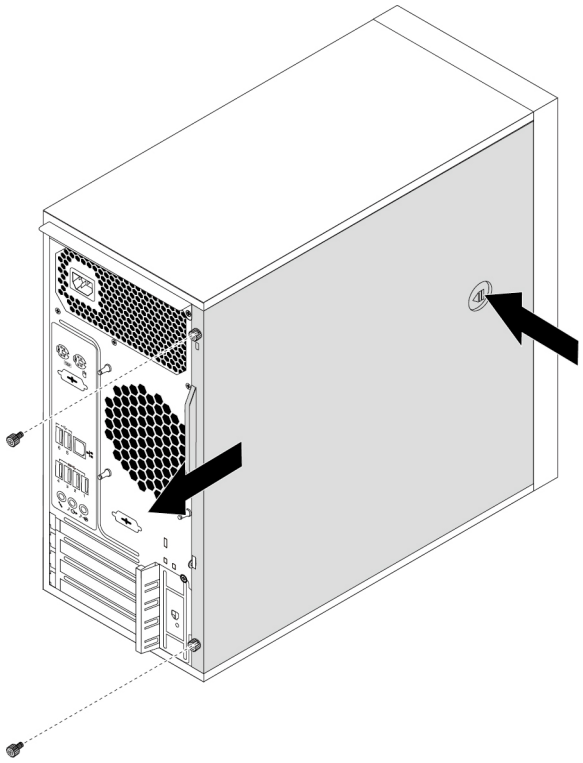

Figure 9. Removing the computer cover

Notes:

- Depending on your computer model, some of the hardware parts in the removing or installing section might not be available.
- Use computer parts provided only by Lenovo.
- When removing or installing an option, use the appropriate instructions in this section along with the instructions that come with the option.
- In most areas of the world, Lenovo requires the return of the defective CRU. Information about this will come with the CRU or will come a few days after the CRU arrives.

Removing and installing hardware

This section provides instructions on how to remove and install hardware for your computer. You can expand the capabilities of your computer and maintain your computer by removing or installing hardware.

Attention: Do not open your computer or attempt any repair before reading and understanding the “Read this first: Important safety information” on page iii.

External options

You can connect external options to your computer, such as external speakers, a printer, or a scanner. For some external options, you must install additional software in addition to making the physical connection. When installing an external option, see “Hardware locations” on page 1 to identify the required connector. Then, use the instructions that come with the option to help you make the connection and install any required software or device drivers.

Front bezel

Attention: Do not open your computer or attempt any repair before reading and understanding the “Read this first: Important safety information” on page iii.

To remove and install the front bezel, do the following:

1. Prepare your computer. See “Preparing your computer and removing the computer cover” on page 51.
2. Release the three plastic tabs on the left side and pivot the front bezel outward to remove it from the computer.

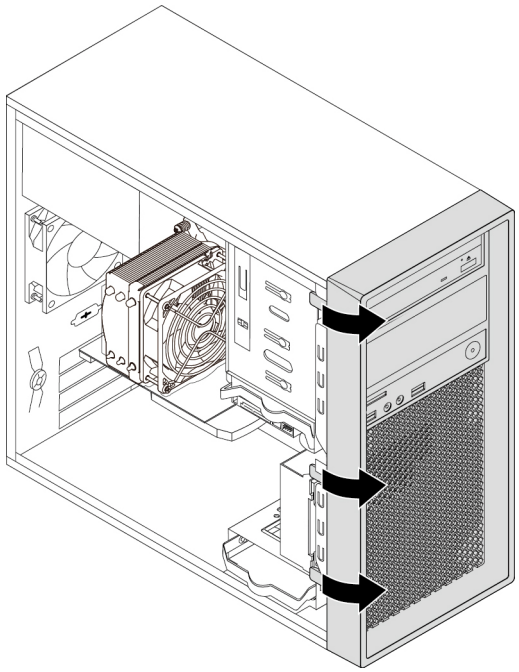

Figure 10. Removing the front bezel

3. To install the front bezel, align the three plastic tabs on the right side of the front bezel with the corresponding holes in the chassis. Then pivot the front bezel inwards until it snaps into position on the left side.

What to do next:

- To work with another piece of hardware, go to the appropriate section.
- To complete the installation or replacement, go to “Completing the parts replacement” on page 104.

Power button

Attention: Do not open your computer or attempt any repair before reading and understanding the “Read this first: Important safety information” on page iii.

To remove and install the power button, do the following:

1. Prepare your computer. See “Preparing your computer and removing the computer cover” on page 51.
2. Remove the front bezel. See “Front bezel” on page 53.
3. Locate the power button. See “Computer components” on page 5.
4. Disconnect the power button cable from the power button connector on the system board. See “Parts on the system board” on page 6.

5. Remove the screw that secures the power button to the front bezel. Then, remove the power button from the front bezel.

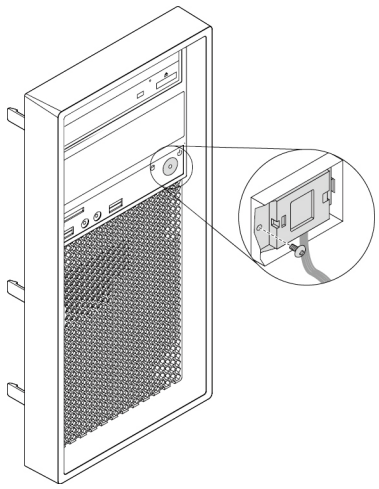

Figure 11. Removing the power button

6. Align the screw hole in the power button with the corresponding hole in the front bezel. Then install the screw to secure the power button to the front bezel.

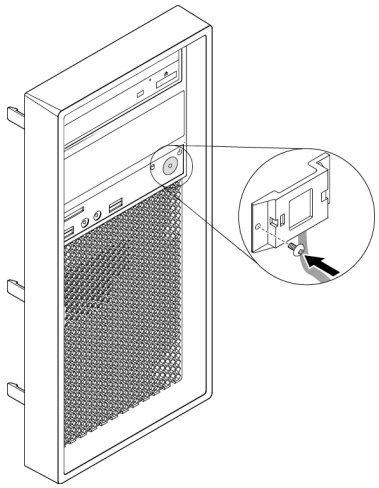

Figure 12. Installing the power button

7. Connect the power button cable to the front-bezel connector on the system board. See “Parts on the system board” on page 6.
8. Reinstall the front bezel. See “Front bezel” on page 53.

What to do next:

- To work with another piece of hardware, go to the appropriate section.
- To complete the installation or replacement, go to “Completing the parts replacement” on page 104.

PCIe card

Attention: Do not open your computer or attempt any repair before reading and understanding the “Read this first: Important safety information” on page iii.

Your computer has one PCIe x4 card slot, one PCIe x8 card slot, and two PCIe x16 card slots (graphics card available on some models).

Half-length PCIe card

To remove or install a half-length PCIe card, do the following:

1. Prepare your computer. See “Preparing your computer and removing the computer cover” on page 51.
2. At the rear of the computer, press the release button 1 to open the card latch 2.

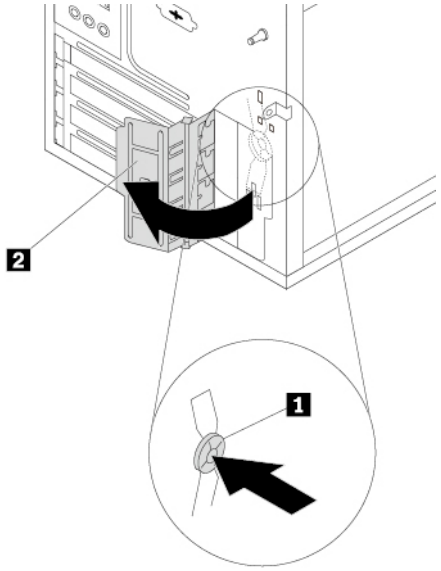

Figure 13. Opening the PCIe card latch

3. Locate the PCIe card slot. See “Parts on the system board” on page 6.
4. If the PCIe card slot is a PCIe x16 card slot, press the retaining latch 1 as shown to disengage the latch.

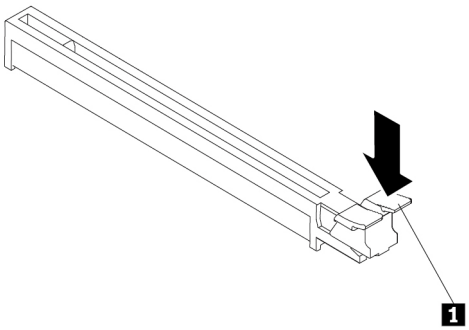

Figure 14. Disengaging the retaining latch

5. To remove a half-length PCIe card, grasp the old card that is currently installed and gently pull it out of the slot.

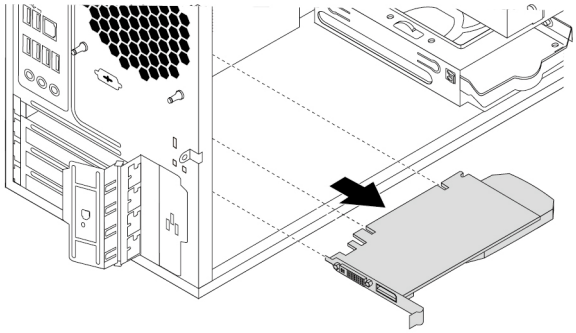

Figure 15. Removing a PCIe card

Notes:

- If the card is connected to other device, disconnect the cables from the card.
- The card might fit tightly into the slot. If necessary, alternately move each side of the card a small amount until the card is removed from the slot.

6. To install a half-length PCIe card, do the following:
   a. Remove the new PCIe card from its static-protective package.
   b. If necessary, remove the appropriate metal slot cover.
   c. Install the new card into the card slot on the system board until it is securely seated. See “Parts on the system board” on page 6.

      Note: If you are installing a PCIe x16 graphics card, ensure that the memory-slot retaining clips are closed before you install the card to avoid any interference during the installation.

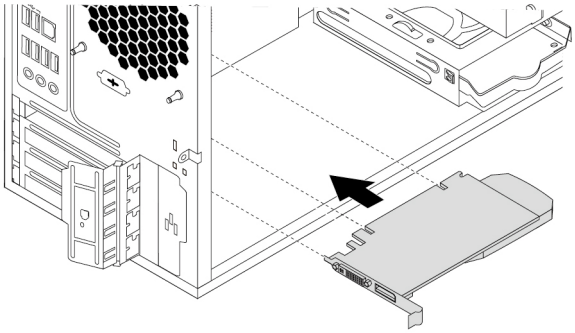

Figure 16. Installing a PCIe card

d. Pivot the card latch to the closed position to secure the PCIe card.

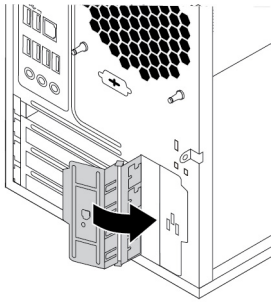

Figure 17. Closing the PCIe card latch

What to do next:

- To work with another piece of hardware, go to the appropriate section.
- To complete the installation or replacement, go to “Completing the parts replacement” on page 104.

Full-length PCIe card

To remove or install a full-length PCIe card, do the following:

1. Prepare your computer. See “Preparing your computer and removing the computer cover” on page 51.
2. Lay the computer on its side for easier access to the PCIe card slots.
3. At the rear of the computer, press the release button **1** to open the card latch **2**.

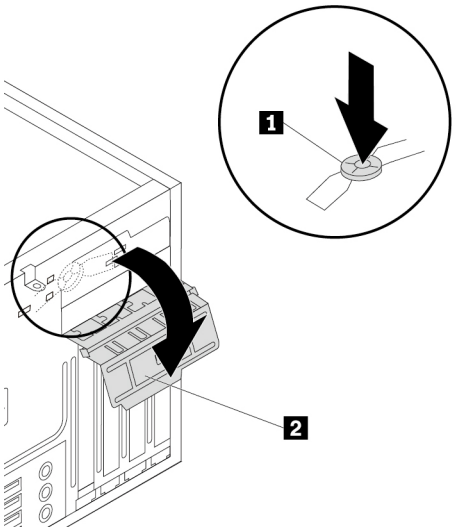

Figure 18. Opening the PCIe card latch

4. Locate the PCIe card slot. See “Parts on the system board” on page 6.

5. If the PCIe card slot is a PCIe x16 card slot, press the retaining latch 1 as shown to disengage the latch.

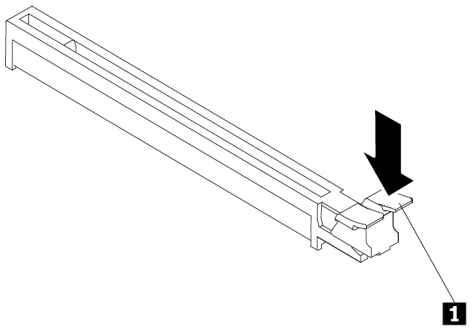

Figure 19. Disengaging the retaining latch

6. To remove a full-length PCIe card, do the following:
   a. Pivot the tab on the front fan assembly outward to open the latch inside.

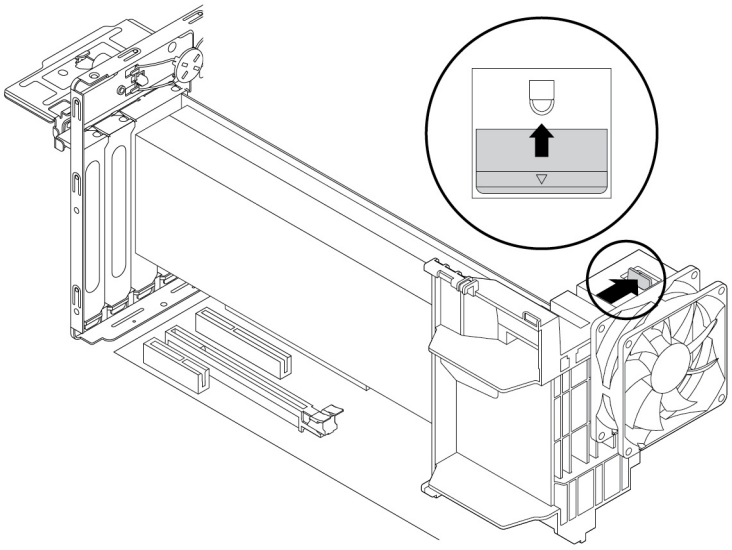

Figure 20. Opening the latch on the front fan assembly

b. Grasp the old card that is currently installed and gently pull it out of the slot.

Notes:

- If the card is connected to other device, disconnect the cables from the card.
- The card might fit tightly into the slot. If necessary, alternately move each side of the card a small amount until the card is removed from the slot.

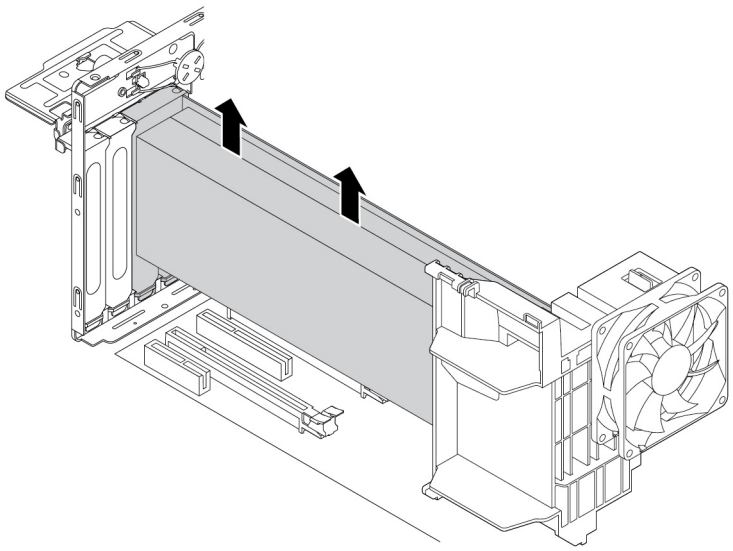

Figure 21. Removing the full-length PCIe card

7. To install a full-length PCIe card, do the following:
   a. Remove the new full-length PCIe card from its static-protective package.

b. Align the notch on the new full-length PCIe card with the slot key in a PCIe x16 card slot on the system board. Then, insert the new card downward into the card slot until it is secured tightly. See “Parts on the system board” on page 6.

Note: Ensure that the memory-slot retaining clips are closed before you install the card to avoid any interference during the installation.

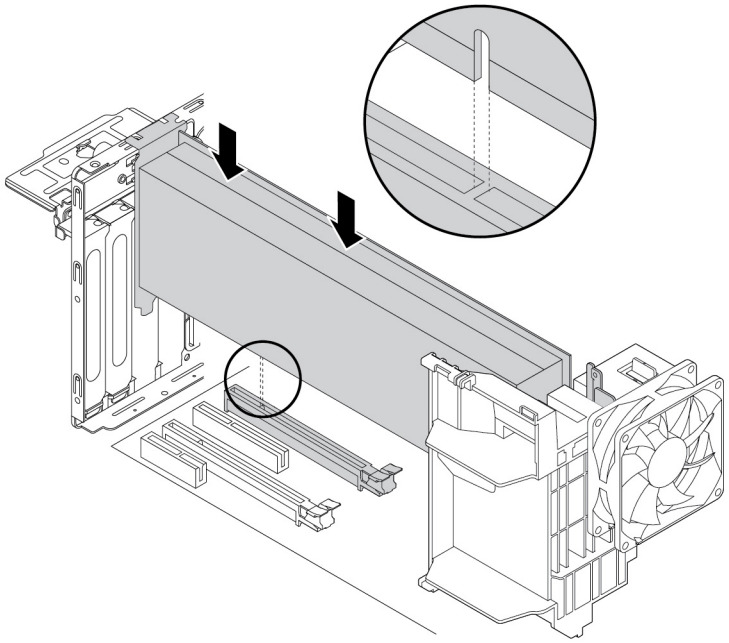

Figure 22. Installing a full-length PCIe card

c. Pivot the tab on the front fan assembly inward to close the latch inside.

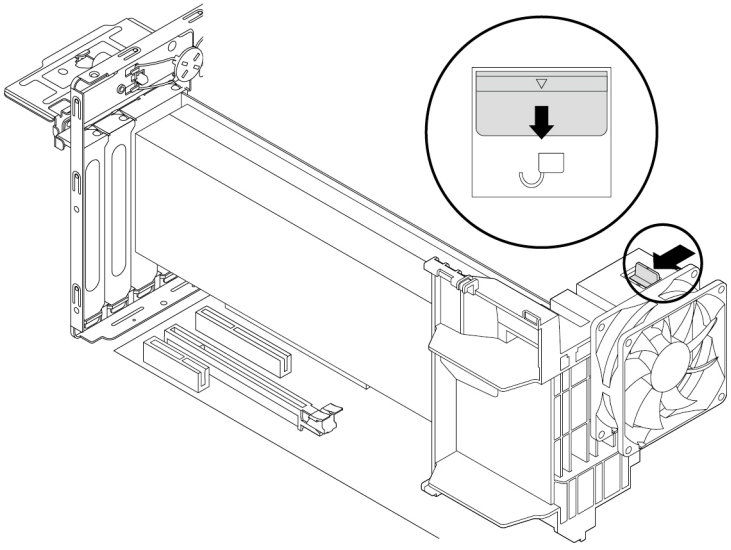

Figure 23. Closing the latch on the front fan assembly

8. Pivot the card latch to the closed position to secure the full-length PCIe card.

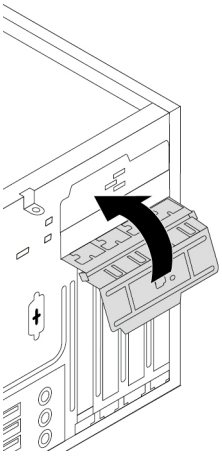

Figure 24. Closing the PCIe card latch

What to do next:

- To work with another piece of hardware, go to the appropriate section.
- To complete the installation or replacement, go to “Completing the parts replacement” on page 104.

Memory module

Attention: Do not open your computer or attempt any repair before reading and understanding the “Read this first: Important safety information” on page iii.

Your computer has four memory slots for installing or replacing DDR4 RDIMMs. When installing or replacing a memory module, use the following guidelines:

- Use any of DDR4 ECC RDIMMs for your computer.
- Use 8 GB, 16 GB, or 32 GB DDR4-2666 RDIMMs ECC in any combination up to a maximum of 128 GB system memory.
- Use 8 GB, 16 GB, 32 GB, or 64 GB DDR4-2933 RDIMMs ECC in any combination up to a maximum of 256GB system memory.

- Install memory modules in the alphabetic order as shown.

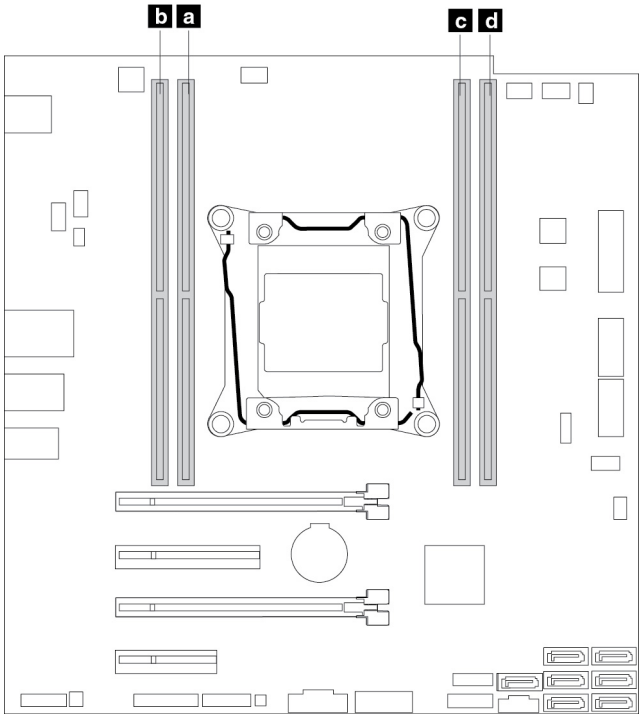

Figure 25. Memory module installation order

To remove or install a memory module, do the following:

1. Prepare your computer. See “Preparing your computer and removing the computer cover” on page 51.
2. Lay the computer on its side for easier access to the system board.
3. Locate the memory slots. See “Parts on the system board” on page 6.
4. Remove any parts that might prevent your access to the memory slots. Depending on your computer model, you might need to remove the PCIe x16 graphics card for easier access to the memory slots. See “Full-length PCIe card” on page 57.
5. To remove a memory module, open the retaining clips and gently pull the memory module out of the memory slot.

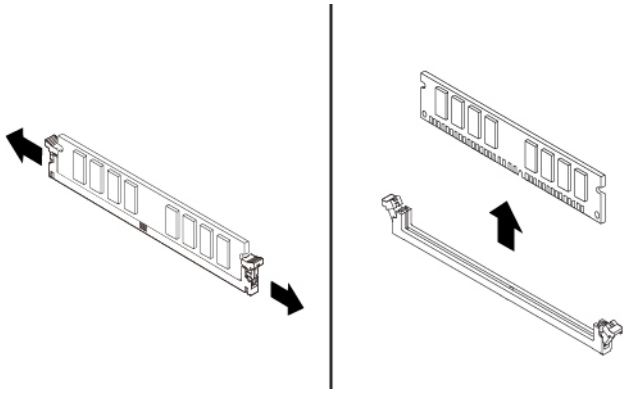

Figure 26. Removing a memory module

6. To install a memory module, do the following:
   a. Open the retaining clips of the memory slot into which you want to install the memory module.

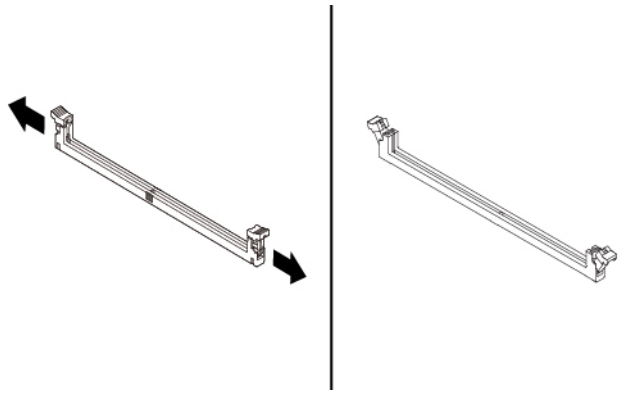

Figure 27. Opening the retaining clips

   b. Position the new memory module over the memory slot. Ensure that the notch 1 on the memory module is aligned with the key 2 in the slot. Push the memory module straight down into the slot until the retaining clips completely close.

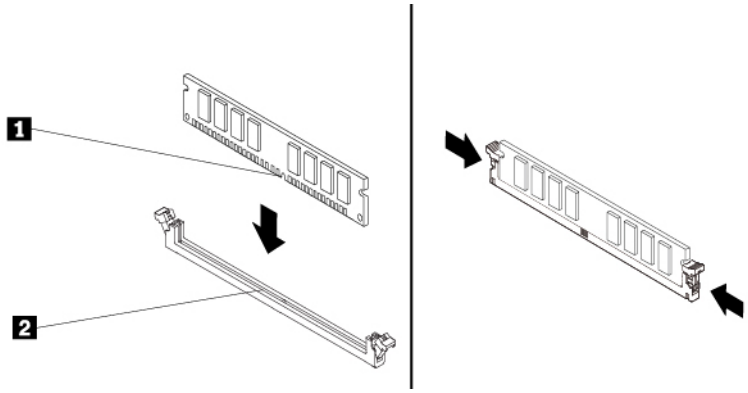

Figure 28. Installing a memory module

7. Reinstall the PCIe x16 graphics card if you have removed it.

What to do next:

- To work with another piece of hardware, go to the appropriate section.
- To complete the installation or replacement, go to “Completing the parts replacement” on page 104.

Optical drive

Attention: Do not open your computer or attempt any repair before reading and understanding the “Read this first: Important safety information” on page iii.

Depending on your computer model, the following devices might be installed in the flex bays:

- 5.25-inch flex module
- Front-access storage enclosure
- Multi-drive conversion kit

- Optical drive
- Slim-optical-drive adapter
- Storage drive bracket

Note: The following instructions on how to remove or install an optical drive also apply to other supported devices in the flex bay.

To remove or install an optical drive, do the following:

1. Prepare your computer. See “Preparing your computer and removing the computer cover” on page 51.
2. Remove the front bezel. See “Front bezel” on page 53.
3. If you are removing an optical drive, do the following:
   a. Disconnect cables from the rear of the optical drive, press the release button 1, and then slide the optical drive out of the chassis.

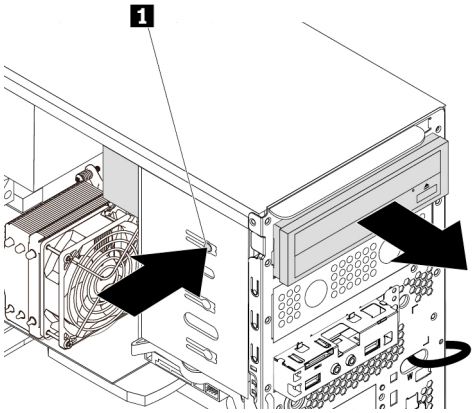

Figure 29. Removing the optical drive

   b. Remove the optical-drive retainer from the left side of the optical drive.
4. If you are installing an optical drive, do the following:

a. Locate the optical-drive retainer from the left side of the computer. Push the retainer downwards to unlock the retainer. Then lift the retainer out of the chassis.

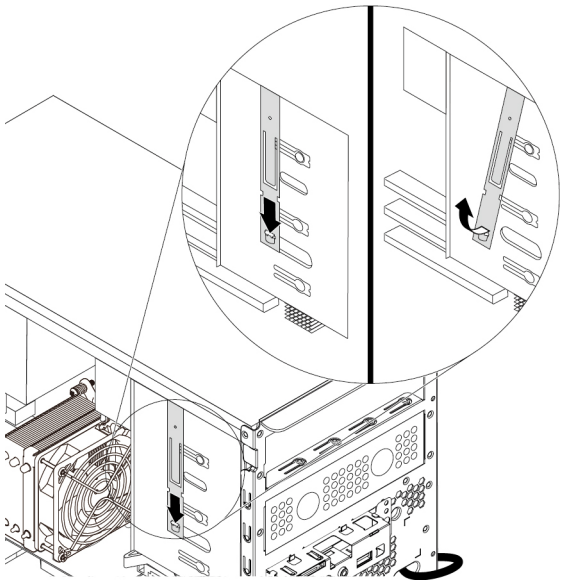

Figure 30. Removing the optical-drive retainer from the computer

b. Install the optical-drive retainer onto the left side of the new optical drive.

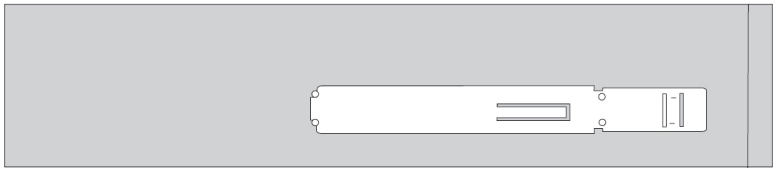

Figure 31. Installing the optical-drive retainer

c. If necessary, remove the plastic panel in the front bezel for the desired flex bay.

d. Slide the new optical drive into the flex bay from the front of the computer until the optical drive snaps into position.

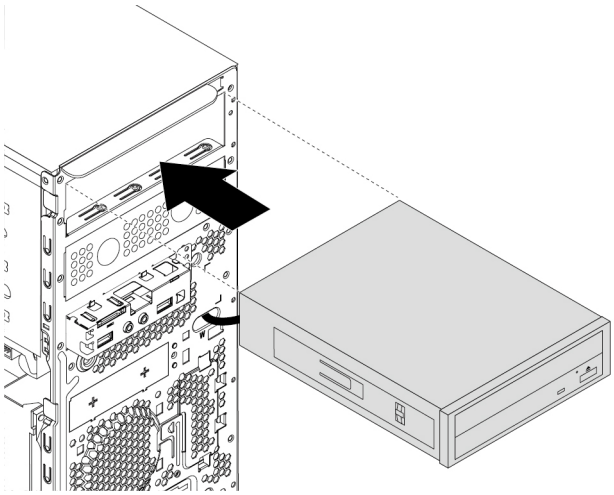

Figure 32. Installing the optical drive

e. Connect the cables to the rear of the new optical drive.

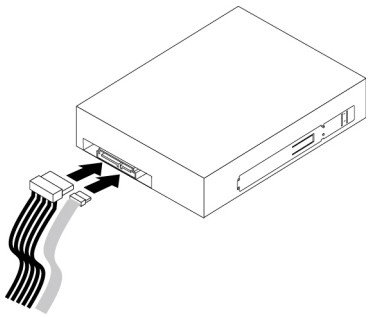

Figure 33. Connecting the cables to the rear of the new optical drive

5. Reinstall the front bezel. See “Front bezel” on page 53.

What to do next:

- To work with another piece of hardware, go to the appropriate section.
- To complete the installation or replacement, go to “Completing the parts replacement” on page 104.

Storage drive in the front-access storage enclosure

Attention: Do not open your computer or attempt any repair before reading and understanding the “Read this first: Important safety information” on page iii.

You can install or replace a storage drive in the front-access storage enclosure. The storage drive also can be hot-swappable, which means that you can install or replace the drive without even turning off your computer. Therefore, lock the enclosure cover to prevent the unexpected removal. The keys are attached at the rear of the computer. Store the keys in a secure place.

The storage drive in the front-access storage enclosure is hot-swappable only when the following requirements are met:

- The SATA cable of the front-access storage enclosure is connected to the eSATA connector on the system board. To verify the cable connection, see “Preparing your computer and removing the computer cover” on page 51 and “Parts on the system board” on page 6 for more information.
- The operating system of your computer does not reside on the storage drive installed in the front-access storage enclosure.

Attention: If any of the above requirements are not met, do not remove or install the storage drive when the computer is turned on. Otherwise, data on the storage drive might get damaged.

3.5-inch storage drive

To remove or install a 3.5-inch storage drive, do the following:

1. Before removing an old 3.5-inch storage drive, safely eject the old storage drive from the operating system first. For more information, see the Linux help system.
2. Unlock the enclosure cover with the provided key as shown. Press the notch a to open the enclosure cover.

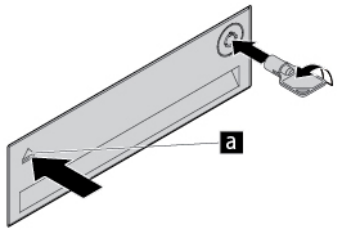

Figure 34. Opening the front-access storage enclosure cover

3. Press the pit on the bracket cover, and then grasp the tilted cover to pull the bracket out of the front-access storage enclosure.

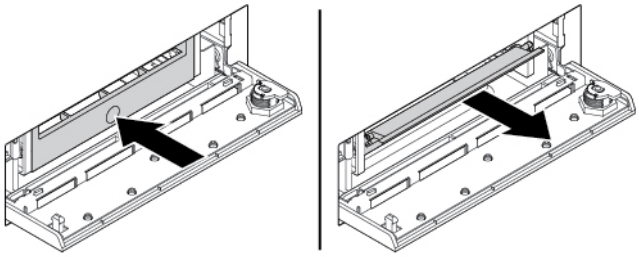

Figure 35. Removing the bracket from the front-access storage enclosure

4. To remove the 3.5-inch storage drive, flex both sides of the bracket to remove the 3.5-inch storage drive from the bracket.

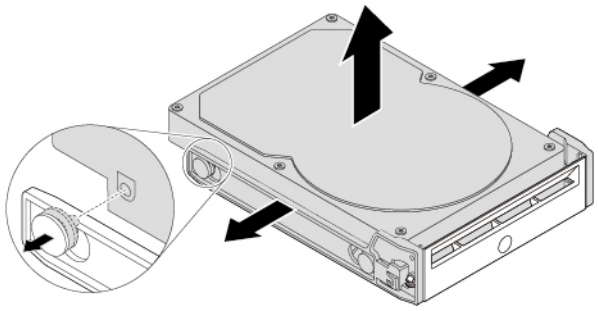

Figure 36. Removing the 3.5-inch storage drive from the bracket

5. To install a new 3.5-inch storage drive into the front-access storage enclosure, do the following:

a. Flex both sides of the bracket and align pins 1 on the bracket with the corresponding holes in the new 3.5-inch storage drive.

Notes:

- Ensure that the circuit board faces downward and the connectors face toward the rear of the bracket.
- Do not touch the circuit board on the storage drive.

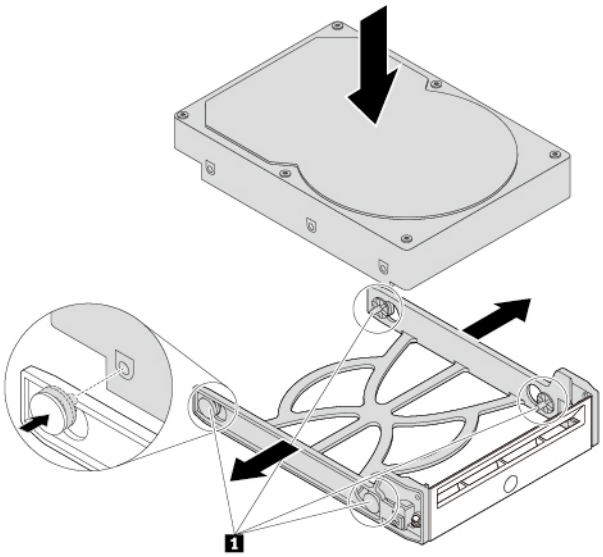

Figure 37. Installing the 3.5-inch storage drive into the bracket

b. Slide the bracket with the new 3.5-inch storage drive into the front-access storage enclosure until it snaps into position.

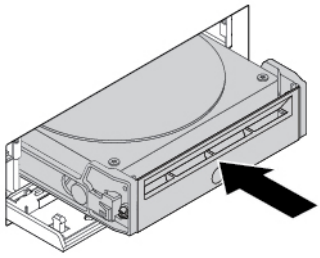

Figure 38. Installing the 3.5-inch storage drive into the front-access storage enclosure

c. Press the notch to secure the enclosure cover and lock the enclosure cover with the key.

What to do next:

- To work with another piece of hardware, go to the appropriate section.
- To complete the installation or replacement, go to “Completing the parts replacement” on page 104.

2.5-inch storage drive

To remove or install a 2.5-inch storage drive, do the following:

1. Before removing an old 2.5-inch storage drive, safely eject the old storage drive from the operating system first. For more information, see the Linux help system.
2. Unlock the enclosure cover with the provided key as shown. Press the notch **a** to open the enclosure cover.

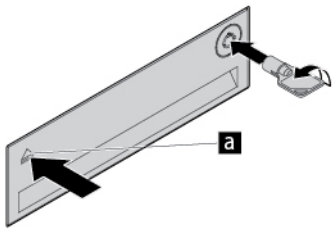

Figure 39. Opening the front-access storage enclosure cover

3. Press the pit on the bracket cover, and then grasp the tilted cover to pull the bracket out of the front-access storage enclosure.

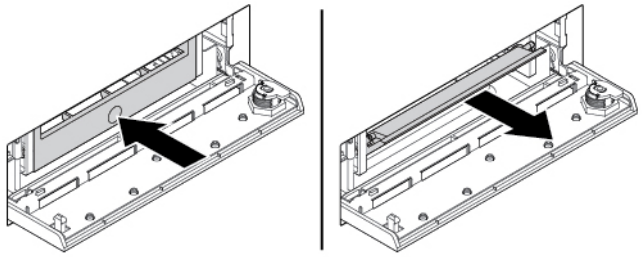

Figure 40. Removing the bracket from the front-access storage enclosure

4. To remove the 2.5-inch storage drive, do the following:
   a. Flex both sides of the bracket to remove the 2.5-inch storage drive from the bracket.

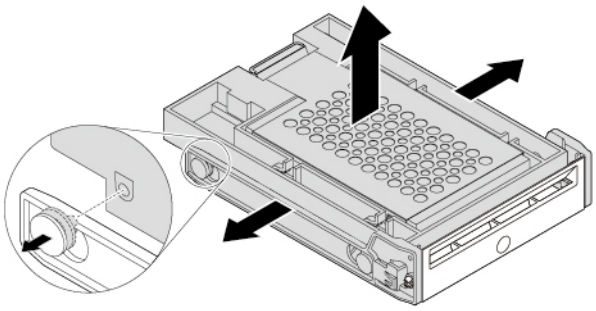

Figure 41. Removing the 2.5-inch storage drive from the bracket

b. Pivot the tab 1 of the metal adapter upward. Then, push the adapter as shown until the four tabs on the adapter slide into the notches 2. Pivot the adapter as shown to remove it with the storage drive from the converter.

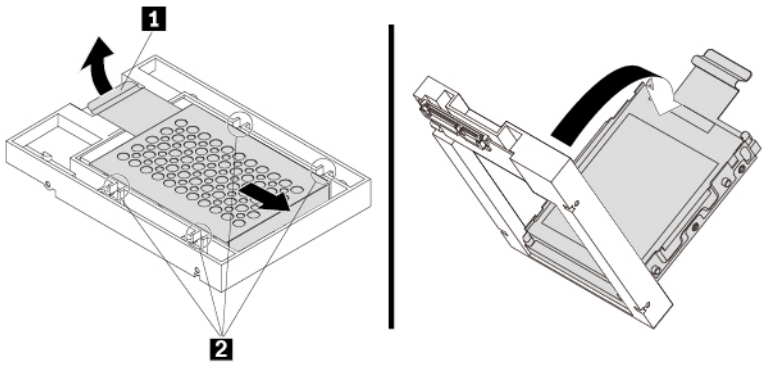

Figure 42. Removing the adapter from the converter

c. Flex both sides of the adapter to release the four pins 1 from the storage drive. Then, remove the storage drive from the adapter.

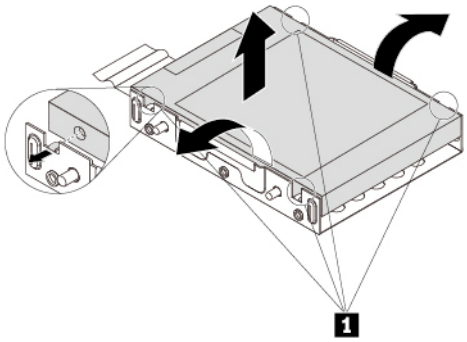

Figure 43. Removing the storage drive from the adapter

5. To install a new 2.5-inch storage drive, do the following:

a. Note the orientation of the connector on the new storage drive. Then, flex both sides of the adapter and align the four pins 1 with the corresponding holes in the storage drive.

   Note: Do not touch the circuit board (if accessible) of the 2.5-inch storage drive.

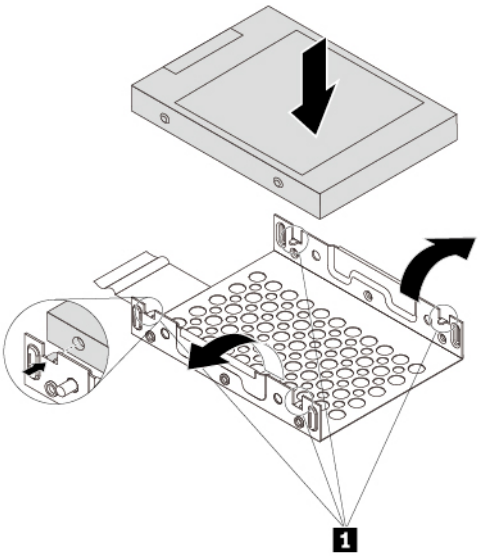

Figure 44. Installing the storage drive into the adapter

b. Align the four tabs on the adapter with the corresponding notches 1 in the converter. Then, slide the storage drive as shown until the tab 2 snaps into position. The adapter with the storage drive is installed into the converter.

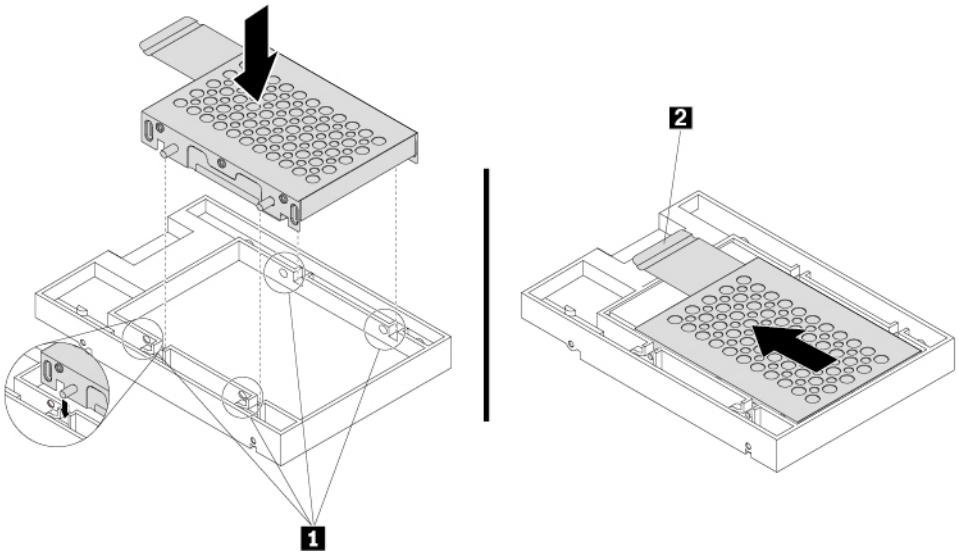

Figure 45. Installing the adapter into the converter

c. Flex both sides of the plastic bracket and align pins 1 on the plastic bracket with the corresponding holes in the plastic frame of the converter.

Notes:

- Ensure that the circuit board faces downward and the connectors face toward the rear of the bracket.
- Do not touch the circuit board on the storage drive.

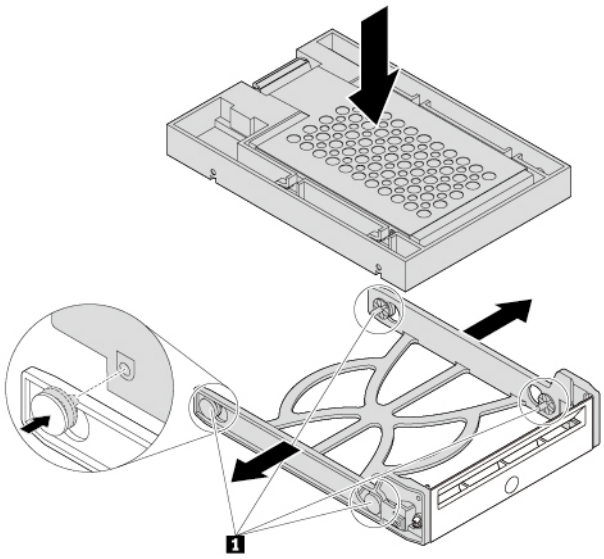

Figure 46. Installing the converter with the 2.5-inch storage drive into the plastic bracket

d. Slide the plastic bracket with the new 2.5-inch storage drive into the front-access storage enclosure until it snaps into position.

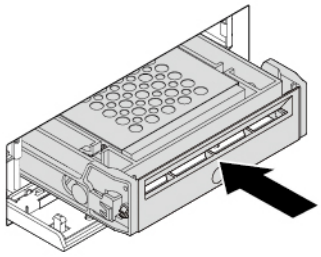

Figure 47. Installing the plastic bracket with the 2.5-inch storage drive into the front-access storage enclosure

e. Press the notch to secure the enclosure cover and lock the enclosure cover with the key.

What to do next:

- To work with another piece of hardware, go to the appropriate section.
- To complete the installation or replacement, go to “Completing the parts replacement” on page 104.

M.2 solid-state drive

Attention: Do not open your computer or attempt any repair before reading and understanding the “Read this first: Important safety information” on page iii.

M.2 solid-state drive in the storage drive bracket

To remove or install the M.2 solid-state drive in the storage drive bracket, do the following:

1. Prepare your computer. See “Preparing your computer and removing the computer cover” on page 51.
2. To remove the failing M.2 solid-state drive, do the following:
   a. Unlock the M.2 solid-state drive carrier with the provided key as shown. Store the key in a secure place for later use. Press the eject button to eject the carrier from the storage drive bracket. Then, grasp the M.2 solid-state drive carrier by its edge and gently pull it out of the bracket.

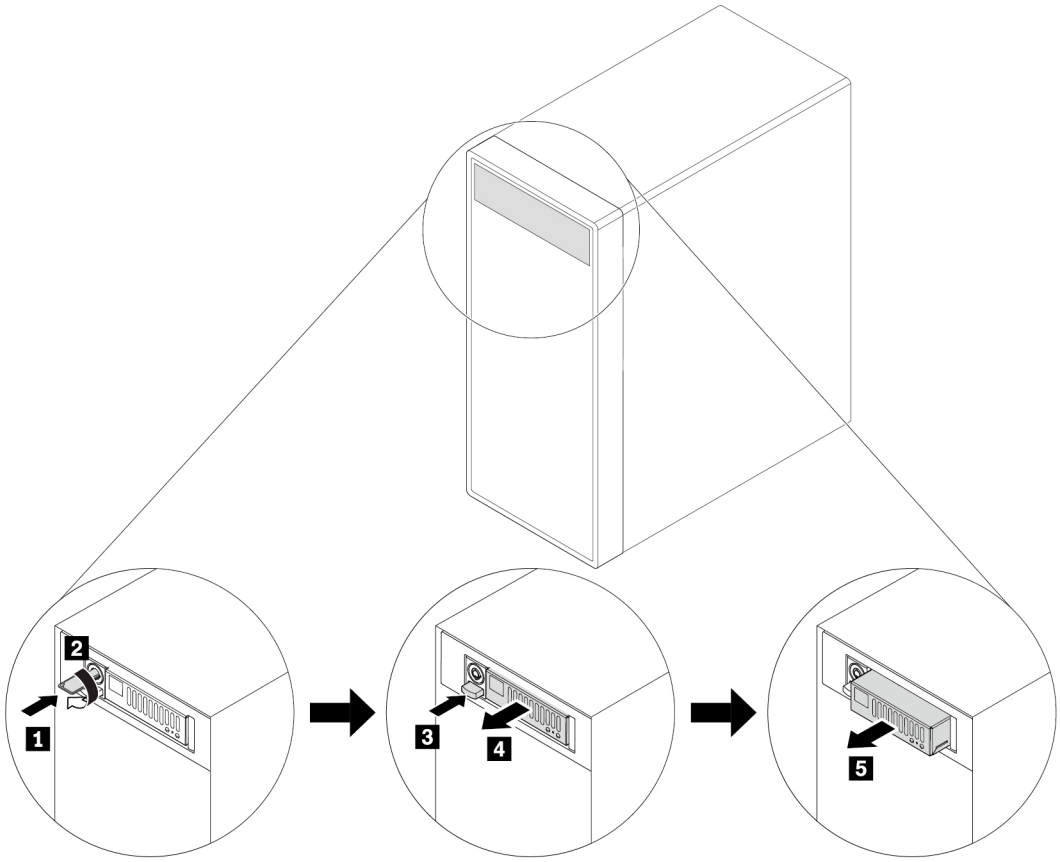

Figure 48. Removing the M.2 solid-state drive carrier

b. Remove two screws and slide the cover as shown to remove the cover from the carrier.

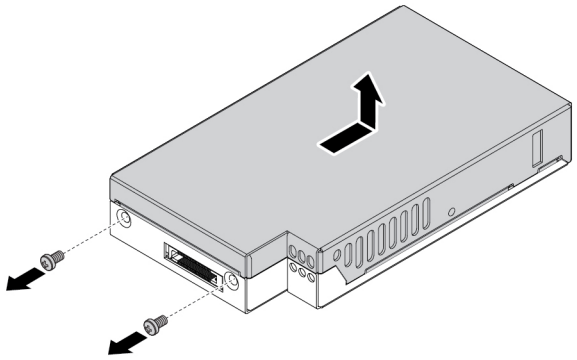

Figure 49. Removing the cover of the M.2 solid-state drive carrier

c. Loosen the screw that secures the M.2 solid-state drive. Then, remove the M.2 solid-state drive out of the slot at an angle of about 20 degrees.

Note: Do not touch the circuit board of the M.2 solid-state drive.

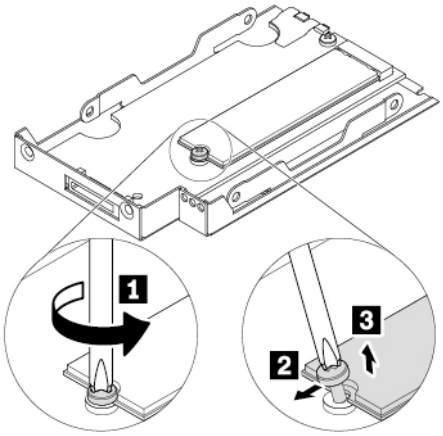

Figure 50. Removing the M.2 solid-state drive

3. To install the M.2 solid-state drive, do the following:

a. Insert the new M.2 solid-state drive into the slot at an angle of about 20 degrees. Pivot the M.2 solid-state drive downward. Then, tighten the screw to secure the M.2 solid-state drive.

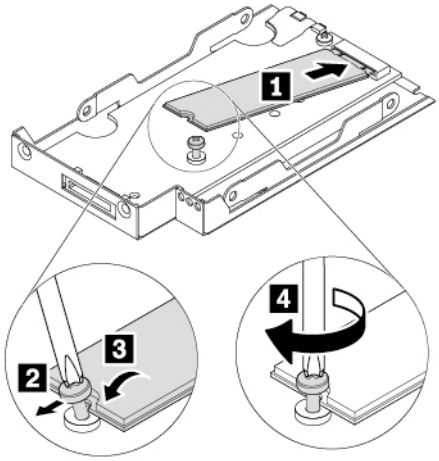

Figure 51. Installing the M.2 solid-state drive

b. Reinstall the cover of the carrier as shown and reinstall the screws to secure the cover.

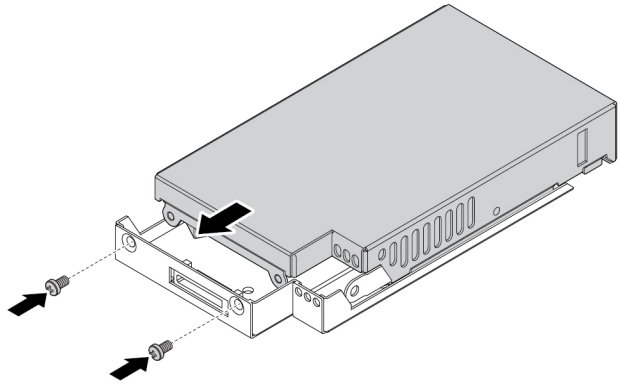

Figure 52. Installing the cover of the M.2 solid-state drive carrier

c. Reinstall the carrier into the bracket as shown until it snaps in to position. Lock the carrier with the key. Always store the key in a secure place.

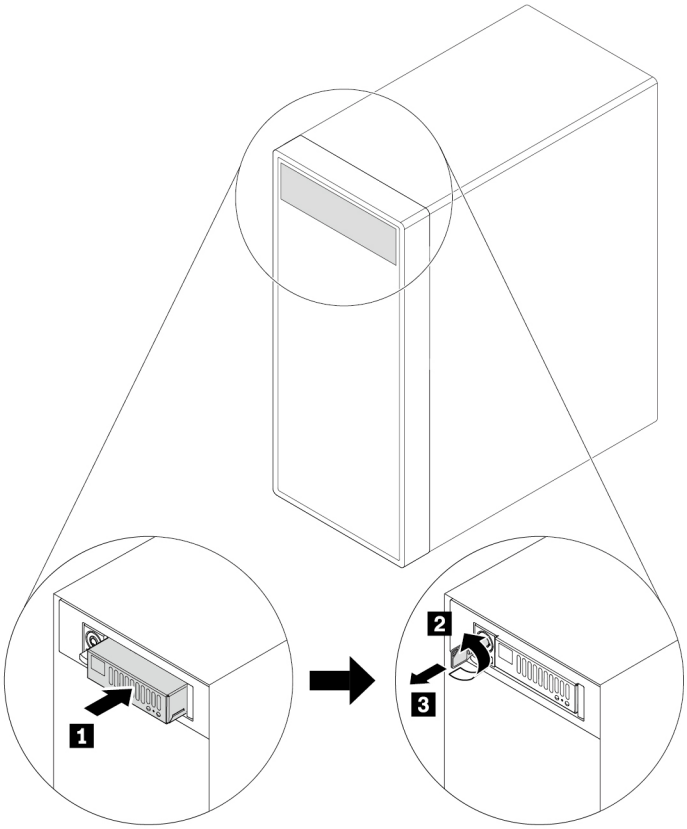

Figure 53. Reinstalling the M.2 solid-state drive carrier

What to do next:

- To work with another piece of hardware, go to the appropriate section.
- To complete the installation or replacement, go to "Completing the parts replacement" on page 104.

Device in the multi-drive conversion kit

Attention: Do not open your computer or attempt any repair before reading and understanding the "Read this first: Important safety information" on page iii.

The multi-drive conversion kit (hereafter referred to as kit) might be equipped with either one or both of the following components:

- Slim optical drive
- Storage drive (such as hard disk drive, hybrid drive, or solid-state drive)

Slim optical drive

Note: The instructions on how to remove or install a slim optical drive in the kit also apply to the slim-optical-drive adapter.

To remove or install a slim optical drive, do the following:

1. Prepare your computer. See "Preparing your computer and removing the computer cover" on page 51.

2. Ensure that all the cables are disconnected from the kit. Remove the kit from the front of the computer. See “Optical drive” on page 63.
3. To remove the slim optical drive from the kit, do the following:
   a. Press the clip through the hole in the top of the kit as shown and push forward the slim optical drive. Then, remove the slim optical drive out of the kit.

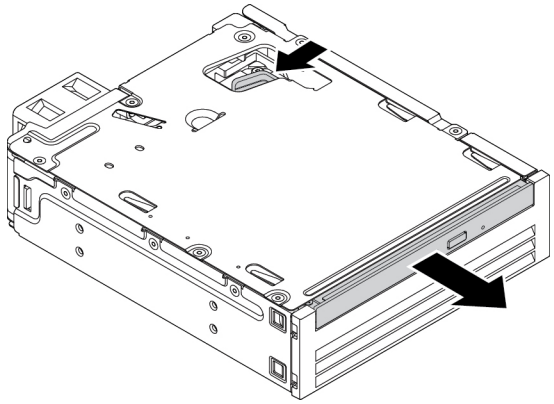

Figure 54. Removing the slim optical drive from the kit

   b. Detach the bracket as shown to remove it from the slim optical drive.

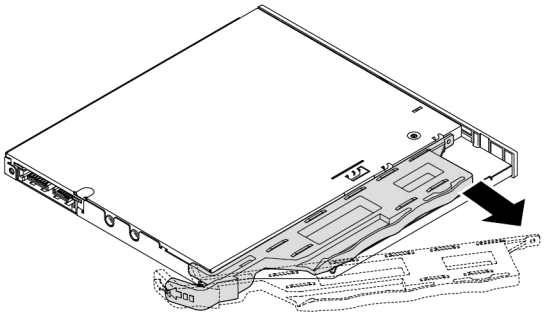

Figure 55. Removing the bracket from the slim optical drive

4. To install a new slim optical drive into the kit, do the following:

a. Align the three tabs on the bracket with the corresponding holes in the new slim optical drive. Then, install the bracket to the new slim optical drive.

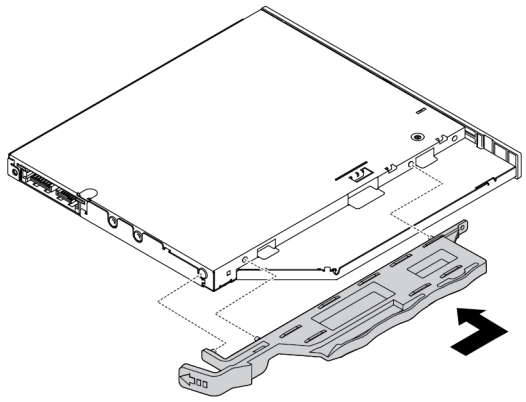

Figure 56. Installing the bracket to the new slim optical drive

b. Insert the new slim optical drive into the kit until you hear a click. The slim optical drive is secured in place.

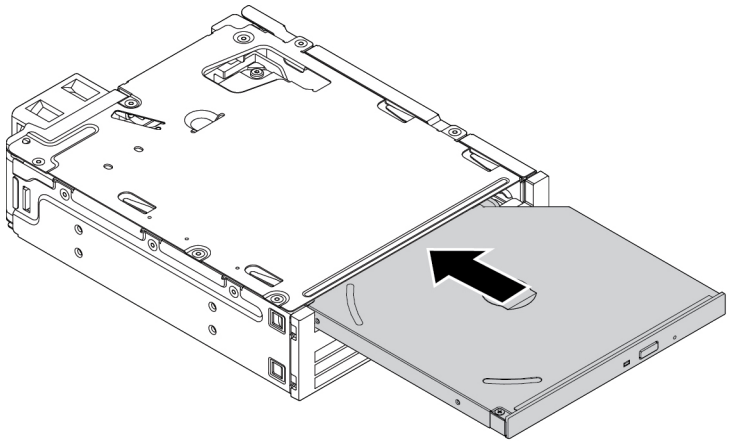

Figure 57. Installing the slim optical drive into the kit

5. Slide the kit into the flex bay and reconnect the cables.

What to do next:

- To work with another piece of hardware, go to the appropriate section.
- To complete the installation or replacement, go to “Completing the parts replacement” on page 104.

3.5-inch storage drive

To remove or install a 3.5-inch storage drive, do the following:

1. Prepare your computer. See “Preparing your computer and removing the computer cover” on page 51.
2. Ensure that all the cables are disconnected from the kit. Remove the kit from the front of the computer. See “Optical drive” on page 63.

3. Press the clip as shown to open the rear cover of the kit.

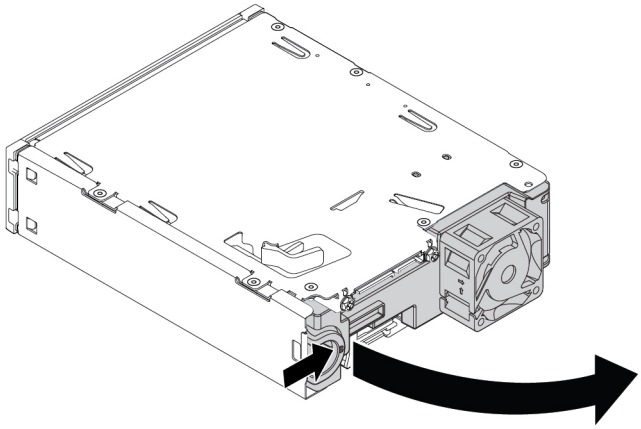

Figure 58. Opening the rear cover of the kit

4. Press both clips simultaneously toward each other and pull the conversion bracket out of the rear of the kit.

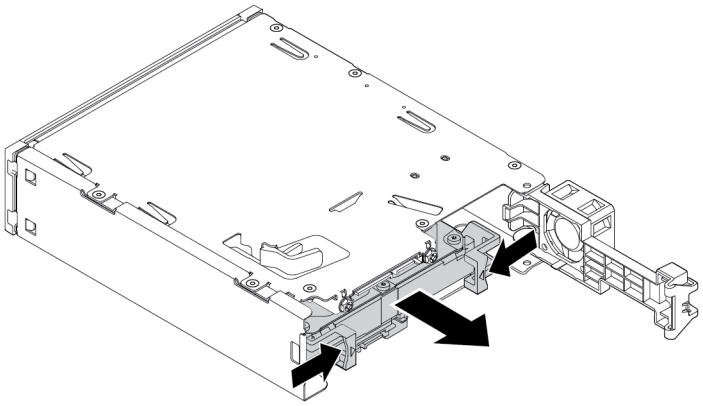

Figure 59. Removing the conversion bracket from the kit

5. To remove the 3.5-inch storage drive, flex both sides of the conversion bracket and then remove the drive out of the bracket. Do not touch the circuit board 1 on the drive.

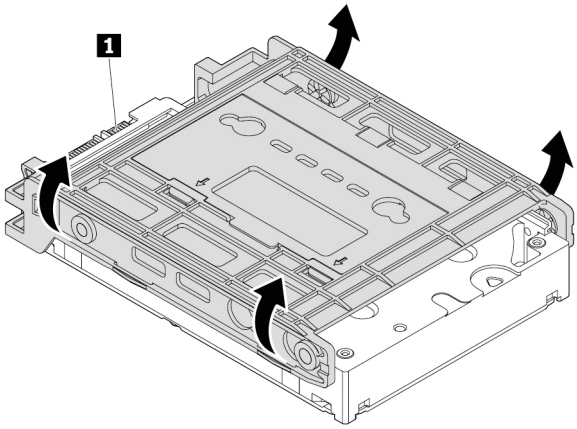

Figure 60. Removing the storage drive from the bracket

6. To install a 3.5-inch storage drive, ensure that the conversion bracket is unfolded. To unfold the bracket, do the following:
   a. Remove pins 1 and install them into slots 2.

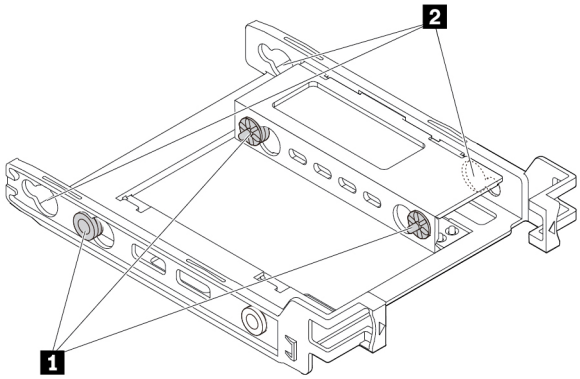

Figure 61. Removing pins and installing them into slots

b. Release tabs 1, 2, and 3 from the corresponding slots.

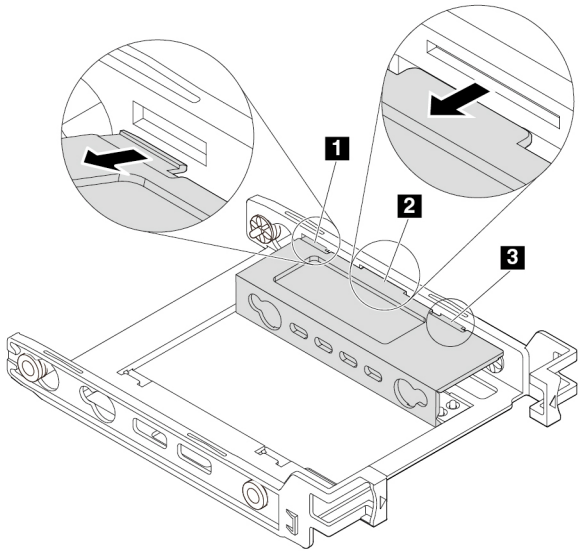

Figure 62. Releasing tabs from the corresponding slots

c. Unfold the bracket as shown.

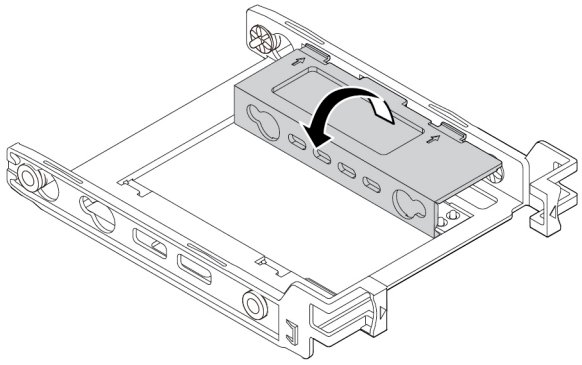

Figure 63. Unfolding the bracket

d. Insert tabs 1, 2, and 3 into the corresponding slots. Ensure that the tabs are secured in place.

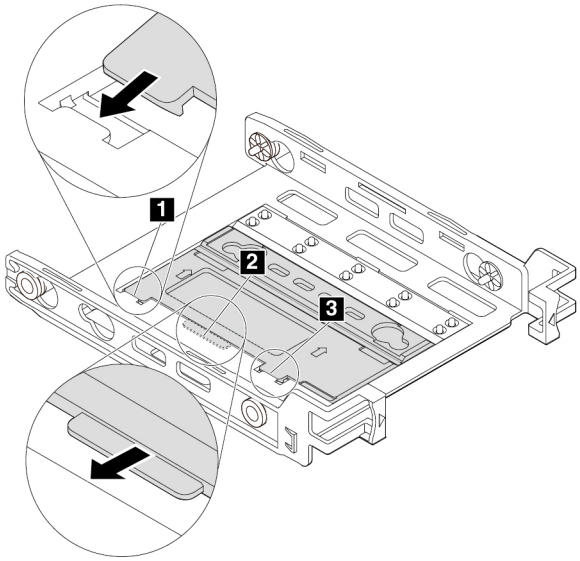

Figure 64. Inserting tabs into the corresponding slots

7. Install a 3.5-inch storage drive into the bracket by doing the following:
   a. Flex both sides of the bracket and align pins 1, 2, 3, and 4 on the bracket with the corresponding holes in the new 3.5-inch storage drive.
   b. Install the new 3.5-inch storage drive into the bracket. Do not touch the circuit board 5 on the drive.

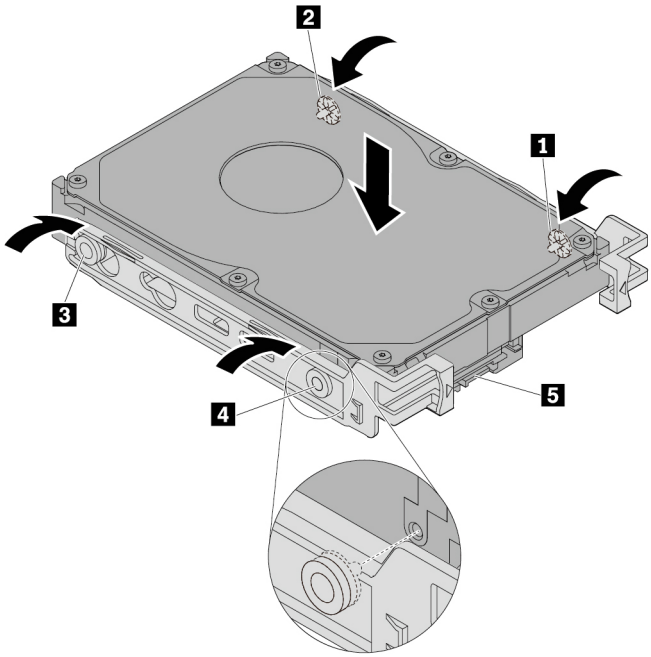

Figure 65. Installing the new 3.5-inch storage drive into the bracket

c. Slide the new 3.5-inch storage drive with bracket into the kit from the rear until the drive snaps into position.

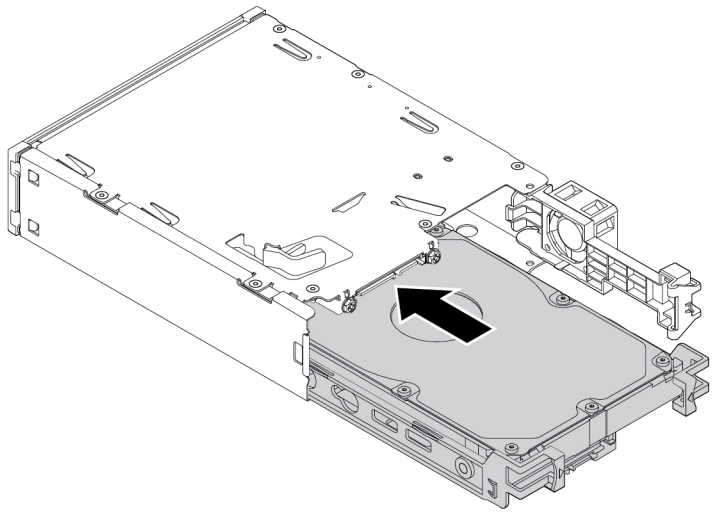

Figure 66. Installing the new 3.5-inch storage drive with bracket into the kit

8. Pivot the rear cover of the kit inward until you hear a click. Ensure that the rear cover is secured in place.

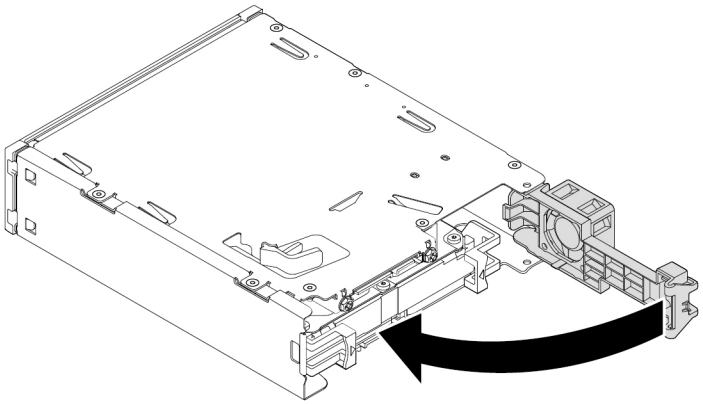

Figure 67. Pivoting the rear cover inward

9. Slide the kit into the flex bay and reconnect the cables.

What to do next:

- To work with another piece of hardware, go to the appropriate section.
- To complete the installation or replacement, go to “Completing the parts replacement” on page 104.

2.5-inch storage drive

To remove or install a 2.5-inch storage drive, do the following:

1. Prepare your computer. See “Preparing your computer and removing the computer cover” on page 51.
2. Ensure that all the cables are disconnected from the kit. Remove the kit from the front of the computer. See “Optical drive” on page 63.

3. Press the clip as shown to open the rear cover of the kit.

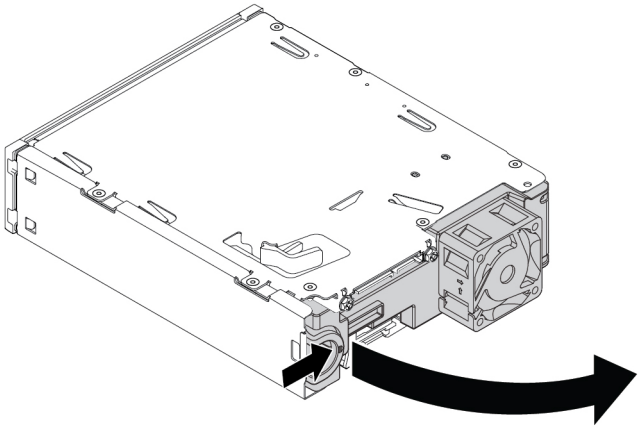

Figure 68. Opening the rear cover of the kit

4. Press both clips simultaneously toward each other and pull the conversion bracket out of the rear of the kit.

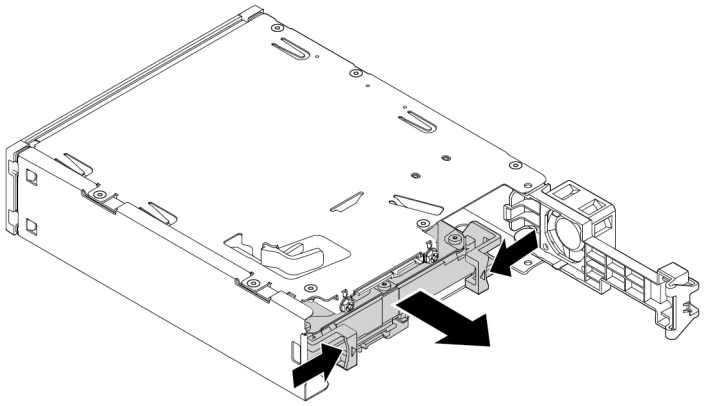

Figure 69. Removing the 2.5-inch storage drive from the kit

5. To remove the 2.5-inch storage drive, flex both sides of the conversion bracket and then remove the drive out of the bracket. Do not touch the circuit board on the drive.

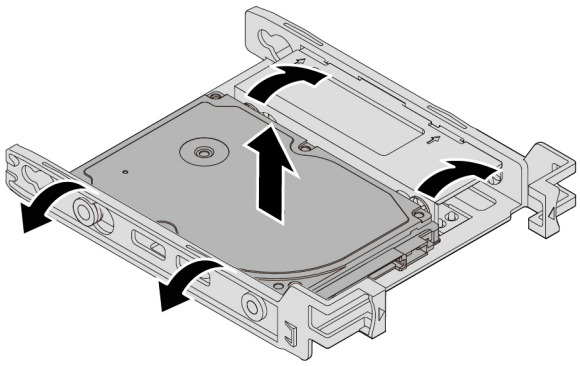

Figure 70. Removing the 2.5-inch storage drive from the bracket

6. To install a 2.5-inch storage drive, ensure that the conversion bracket is folded. To fold the bracket, do the following:
   a. Remove pins 1 and install them into slots 2.

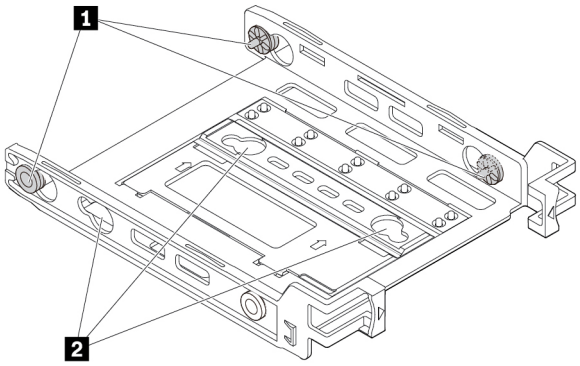

Figure 71. Removing pins and installing them into new slots

   b. Pivot the bracket as shown to release tabs 1, 2, and 3 from the slots.

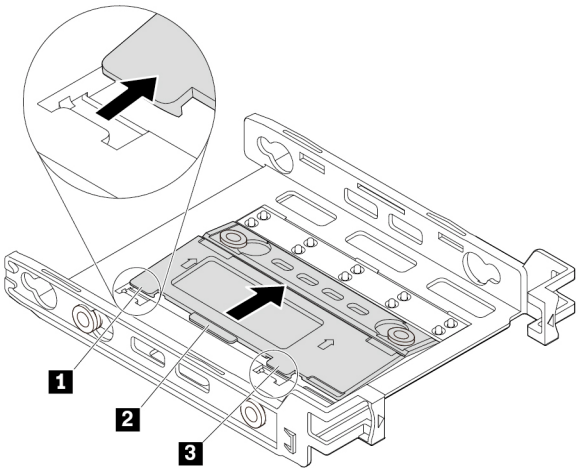

Figure 72. Pivoting the bracket

   c. Fold the bracket as shown.

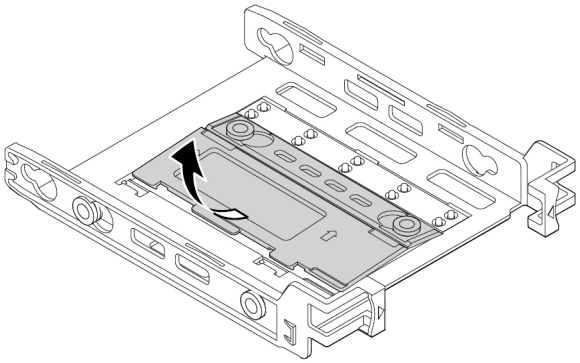

Figure 73. Folding the bracket

d. Insert tabs 1, 2, and 3 into the corresponding slots. Ensure that the tabs are secured in place.

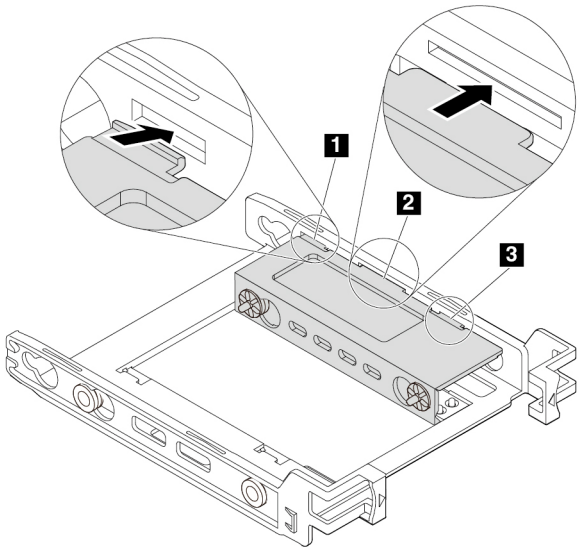

Figure 74. Inserting the tabs into the corresponding slots

7. To install a 2.5-inch storage drive, do the following:
   a. Flex the bracket and align pins 1, 2, 3, and 4 on the bracket with the corresponding holes in the new 2.5-inch storage drive.
   b. Install the new 2.5-inch storage drive into the bracket. Do not touch the circuit board 5 on the drive.

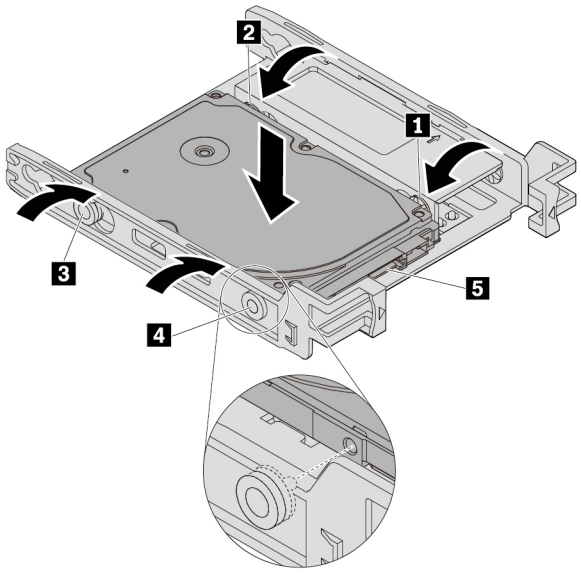

Figure 75. Installing the new 2.5-inch storage drive into the bracket

c. Slide the new 2.5-inch storage drive with bracket into the kit from the rear until the drive snaps into position.

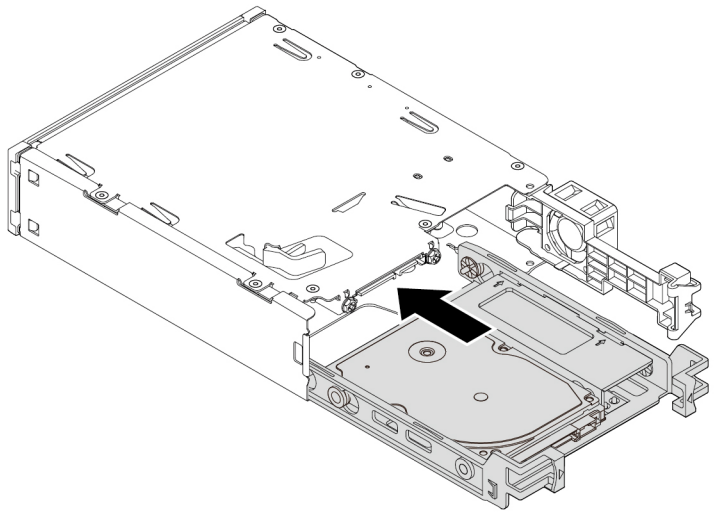

Figure 76. Installing the new 2.5-inch storage drive with bracket into the kit

8. Pivot the rear cover of the kit inward until you hear a click. Ensure that the rear cover is secured in place.

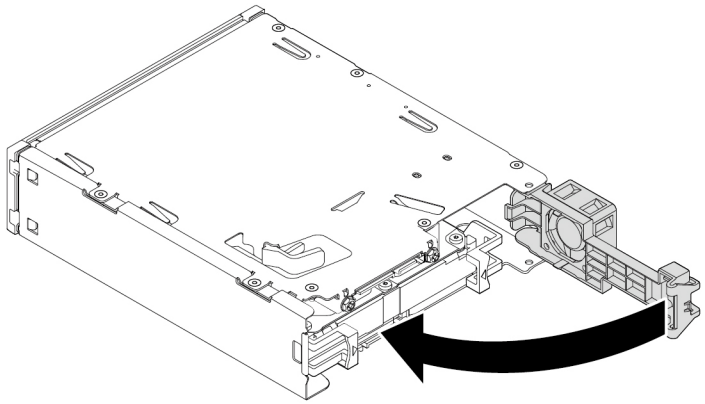

Figure 77. Pivoting the rear cover inward

9. Slide the kit into the flex bay and reconnect the cables.

What to do next:

- To work with another piece of hardware, go to the appropriate section.
- To complete the installation or replacement, go to “Completing the parts replacement” on page 104.

Coin-cell battery

Attention: Do not open your computer or attempt any repair before reading and understanding the “Read this first: Important safety information” on page iii.

Your computer has a special type of memory that maintains the date, time, and settings for built-in features, such as parallel-connector assignments (configuration). A coin-cell battery keeps this information active when you turn off the computer.

The coin-cell battery normally requires no charging or maintenance throughout its life; however, no battery lasts forever. If the coin-cell battery fails, the date and time information is lost.

Refer to the “Lithium coin-cell battery notice” in the *Safety, Warranty, and Setup Guide* for information about disposing of the coin-cell battery.

To remove and install the coin-cell battery, do the following:

1. Prepare your computer. See “Preparing your computer and removing the computer cover” on page 51.
2. Locate the coin-cell battery. See “Parts on the system board” on page 6.
3. Remove any PCIe cards that might prevent your access to the coin-cell battery. See “PCIe card” on page 54.
4. Remove the old coin-cell battery as shown.

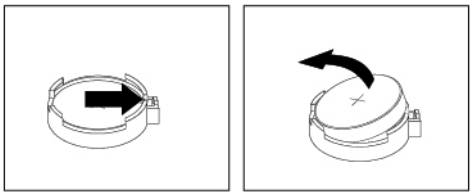

Figure 78. Removing the coin-cell battery

5. Install the new coin-cell battery as shown.

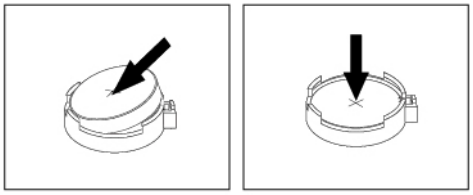

Figure 79. Installing the coin-cell battery

6. Reinstall the PCIe cards if you have removed them. See “PCIe card” on page 54.
7. Reinstall the computer cover and reconnect the cables. See “Completing the parts replacement” on page 104.

   Note: When the computer is turned on for the first time after the coin-cell battery is replaced, an error message might be displayed. This is normal after the coin-cell battery is replaced.
8. Turn on the computer and all attached devices.
9. Use the Setup Utility program to set the date and time. See “Using the Setup Utility program” on page 29.

Cover presence switch

Attention: Do not open your computer or attempt any repair before reading and understanding the “Read this first: Important safety information” on page iii.

To remove or install the cover presence switch, do the following:

1. Prepare your computer. See “Preparing your computer and removing the computer cover” on page 51.
2. Locate the cover presence switch. See “Computer components” on page 5.
3. To remove the cover presence switch, do the following:

a. Disconnect the cover presence switch cable from the cover presence switch connector on the system board. See “Parts on the system board” on page 6.
b. Remove the screw that secures the cover presence switch and remove the cover presence switch from the chassis.

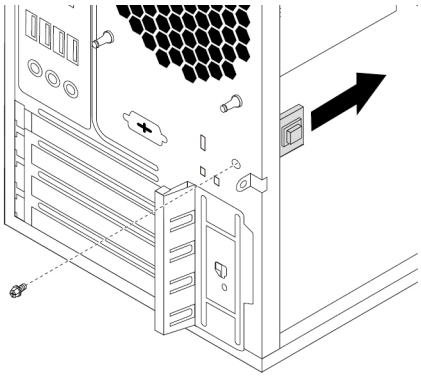

Figure 80. Removing the cover presence switch

4. To install the cover presence switch, do the following:
   a. Align the screw hole in the cover presence switch with the corresponding hole in the chassis. Then install the screw to secure the cover presence switch to the chassis.

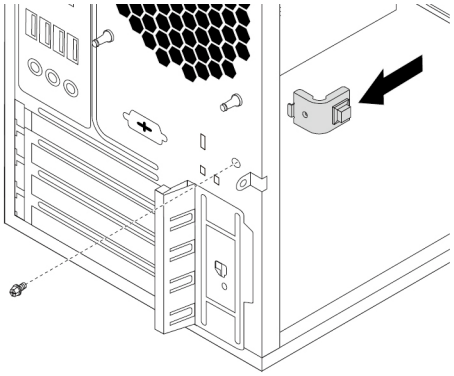

Figure 81. Installing the cover presence switch

   b. Connect the cover presence switch cable to the cover presence switch connector on the system board. See “Parts on the system board” on page 6.

What to do next:

- To work with another piece of hardware, go to the appropriate section.
- To complete the installation or replacement, go to “Completing the parts replacement” on page 104.

Power supply assembly

Attention: Do not open your computer or attempt any repair before reading and understanding the “Read this first: Important safety information” on page iii.

Although there are no moving parts in your computer after the power cord has been disconnected, the following warnings are required for your safety and proper Underwriters Laboratories (UL) certification.

CAUTION:

Keep fingers and other parts of your body away from hazardous, moving parts. If you suffer an injury, seek medical care immediately.

DANGER

Disconnect all power cords from electrical outlets before removing the computer cover or any part that has the above label attached.

To remove and install the power supply assembly, do the following:

1. Prepare your computer. See “Preparing your computer and removing the computer cover” on page 51.
2. To remove the power supply assembly, do the following:
   a. Disconnect the power supply assembly cables from the system board and all drives. See “Parts on the system board” on page 6.
   b. Release the power supply assembly cables from the cable clips and ties.
   c. Lay the computer on its side and remove the four screws at the rear of the chassis that secure the power supply assembly. Then slide the power supply assembly to the front of the computer and then lift it out of the chassis.

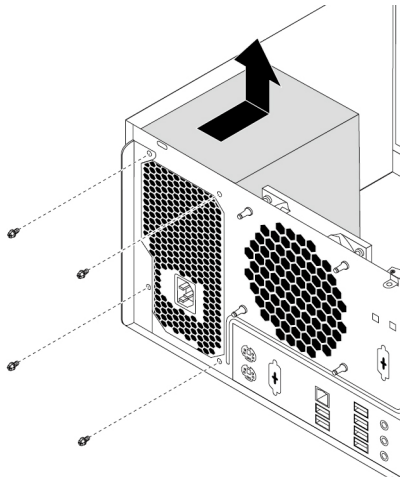

Figure 82. Removing the screws for the power supply assembly

3. To install the power supply assembly, do the following:
   a. Ensure that the new power supply assembly is the correct replacement.
   b. Install the new power supply assembly into the chassis so that the screw holes in the power supply assembly align with those in the chassis.
   c. Install and tighten the four screws to secure the power supply assembly.

      Note: Use only screws provided by Lenovo.
   d. Connect the power supply assembly cables to the system board and each of the drives.
   e. Secure the power supply assembly cables with the cable clips and ties in the chassis.

What to do next:

- To work with another piece of hardware, go to the appropriate section.
- To complete the installation or replacement, go to “Completing the parts replacement” on page 104.

Heat-sink-and-fan assembly

Attention: Do not open your computer or attempt any repair before reading and understanding the “Read this first: Important safety information” on page iii.

CAUTION:



Avoid contact with hot components inside the computer. During operation, some components become hot enough to burn the skin. Before you open the computer cover, turn off the computer, disconnect power, and wait approximately 10 minutes for the components to cool.

To remove or install the heat-sink-and-fan assembly, do the following:

1. Prepare your computer. See “Preparing your computer and removing the computer cover” on page 51.
2. Lay the computer on its side for easier access to the system board.
3. Locate the heat-sink-and-fan assembly. See “Parts on the system board” on page 6.
4. To remove the heat-sink-and-fan assembly, do the following:
   a. Disconnect the heat-sink-and-fan assembly cable from the microprocessor fan connector on the system board. See “Parts on the system board” on page 6.

b. Follow the following sequence to remove the four screws that secure the heat-sink-and-fan assembly to the system board:

- Partially remove screw a, then fully remove screw b, and then fully remove screw a.
- Partially remove screw c, then fully remove screw d, and then fully remove screw c.

Note: Carefully remove the four screws to avoid any possible damage to the system board. The four screws cannot be removed from the heat-sink-and-fan assembly.

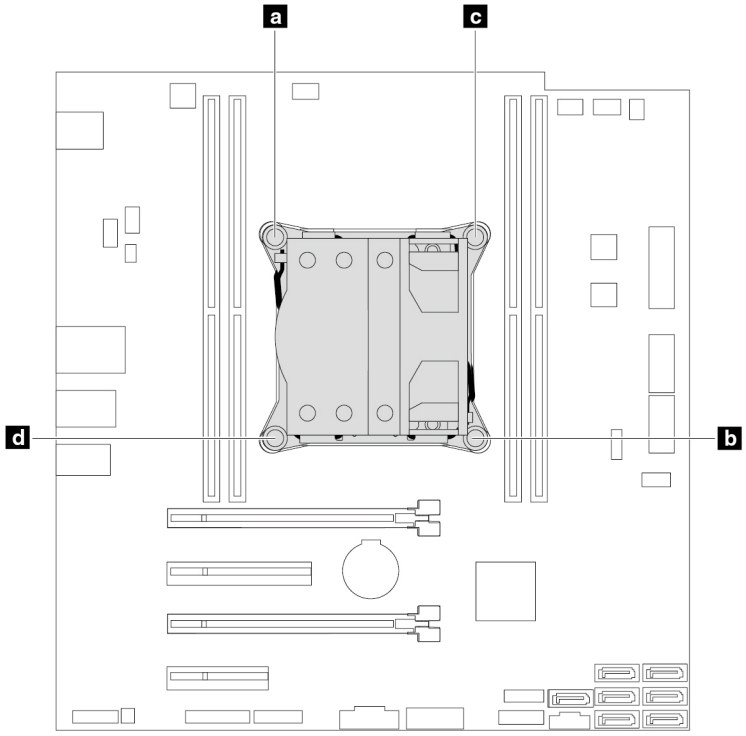

Figure 83. Removing the heat-sink-and-fan assembly

c. Lift the failing heat-sink-and-fan assembly off the system board.

Notes:

- You might have to gently twist the heat-sink-and-fan assembly to free it from the microprocessor.
- Do not touch the thermal grease while handling the heat-sink-and-fan assembly.

5. To install the heat-sink-and-fan assembly, do the following:
   a. Apply appropriate amount of thermal grease to the new heat-sink-and-fan assembly.
   b. Position the heat-sink-and-fan assembly on the system board. Ensure that the four screws are aligned with the holes in the system board.

   Note: Ensure that the heat-sink-and-fan assembly cable is toward the microprocessor fan connector on the system board.

   c. Follow the following sequence to install the four screws to secure the new heat-sink-and-fan assembly. Do not over-tighten the screws.

   - Partially tighten screw a, then fully tighten screw b, and then fully tighten screw a.
   - Partially tighten screw c, then fully tighten screw d, and then fully tighten screw c.

d. Connect the heat-sink-and-fan assembly cable to the microprocessor fan connector on the system board. See “Parts on the system board” on page 6.

What to do next:

- To work with another piece of hardware, go to the appropriate section.
- To complete the installation or replacement, go to “Completing the parts replacement” on page 104.

Primary storage drive

Attention: Do not open your computer or attempt any repair before reading and understanding the “Read this first: Important safety information” on page iii.

To remove or install the primary storage drive, do the following:

1. Prepare your computer. See “Preparing your computer and removing the computer cover” on page 51.
2. Locate the primary storage drive. See “Computer components” on page 5.
3. To remove the primary storage drive, do the following:
   a. Disconnect the signal cable and the power cable from the storage drive.
   b. Pull the handle of the plastic 3.5-inch storage-drive bracket to remove the storage drive from the storage drive bay.

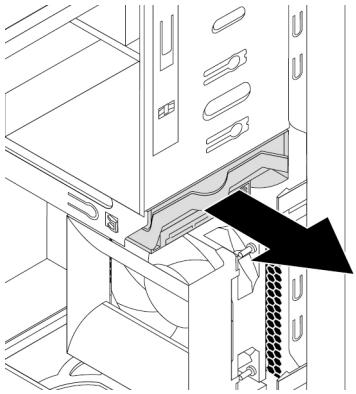

Figure 84. Removing the primary storage drive

   c. Flex the sides of the bracket to remove the storage drive from the bracket.
4. To install the primary storage drive, do the following:
   a. Pull the handle of the plastic 3.5-inch storage-drive bracket to remove it from the storage drive bay.

b. To install a new storage drive into the bracket, flex the bracket and align pin 1, pin 2, pin 3, and pin 4 on the bracket with the corresponding holes in the storage drive. Do not touch the circuit board 5 on the bottom of the storage drive.

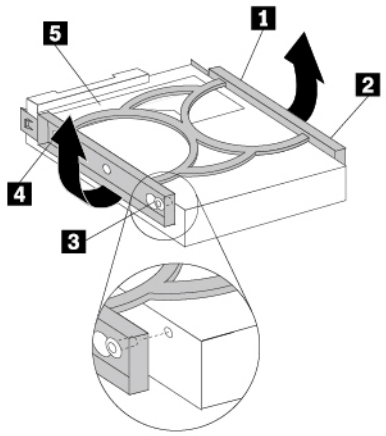

Figure 85. Installing the storage drive into the bracket

c. Slide the new storage drive into the storage drive bay until it snaps into position.

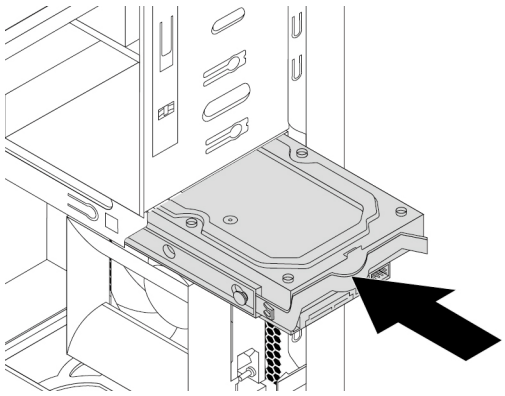

Figure 86. Installing the primary storage drive

d. Connect the signal cable and the power cable to the new storage drive.

What to do next:

- To work with another piece of hardware, go to the appropriate section.
- To complete the installation or replacement, go to “Completing the parts replacement” on page 104.

Secondary storage drive

Attention: Do not open your computer or attempt any repair before reading and understanding the “Read this first: Important safety information” on page iii.

Note: Your computer comes with a secondary storage drive bay for installing or replacing a secondary 3.5-inch storage drive or a 2.5-inch storage drive.

To remove or install the secondary storage drive, do the following:

1. Prepare your computer. See “Preparing your computer and removing the computer cover” on page 51.
2. Locate the secondary storage drive. See “Computer components” on page 5.
3. To remove the secondary storage drive, do the following:
   a. Disconnect the signal cable and the power cable from the storage drive.
   b. Pull the handle of the plastic 3.5-inch storage-drive bracket to remove the storage drive from the storage drive bay.

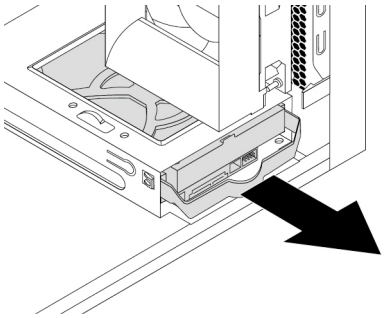

Figure 87. Removing the secondary storage drive

   c. Flex the sides of the bracket to remove the storage drive from the bracket.
4. To install the secondary storage drive, do the following:
   a. Pull the handle of the plastic 3.5-inch storage-drive bracket to remove it from the storage drive bay.

b. To install a new storage drive into the bracket, flex the bracket and align pin 1, pin 2, pin 3, and pin 4 on the bracket with the corresponding holes in the storage drive. Do not touch the circuit board 5 on the bottom of the storage drive.

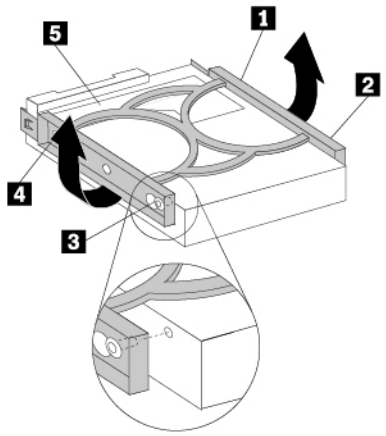

Figure 88. Installing the storage drive into the bracket

c. Slide the new storage drive into the storage drive bay until it snaps into position.

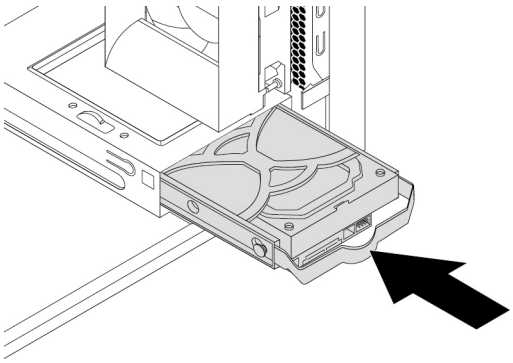

Figure 89. Installing the secondary storage drive

d. Connect the signal cable and the power cable to the new storage drive.

What to do next:

- To work with another piece of hardware, go to the appropriate section.
- To complete the installation or replacement, go to “Completing the parts replacement” on page 104.

2.5-inch storage drive

Attention: Do not open your computer or attempt any repair before reading and understanding the “Read this first: Important safety information” on page iii.

The 2.5-inch storage drive is only available on some models.

To remove or install a 2.5-inch storage drive, do the following:

1. Prepare your computer. See “Preparing your computer and removing the computer cover” on page 51.
2. Locate the desired storage drive bay. See “Internal storage drives” on page 8.
3. To remove a 2.5-inch storage drive, do the following:
   a. Disconnect the signal cable and power cable from the storage drive.
   b. Remove the plastic 3.5-inch storage-drive bracket with the 2.5-inch storage drive from the storage drive bay. See “Primary storage drive” on page 94 or “Secondary storage drive” on page 96.
   c. Flex the sides of the bracket to remove the 2.5-inch to 3.5-inch storage-drive converter from the bracket.

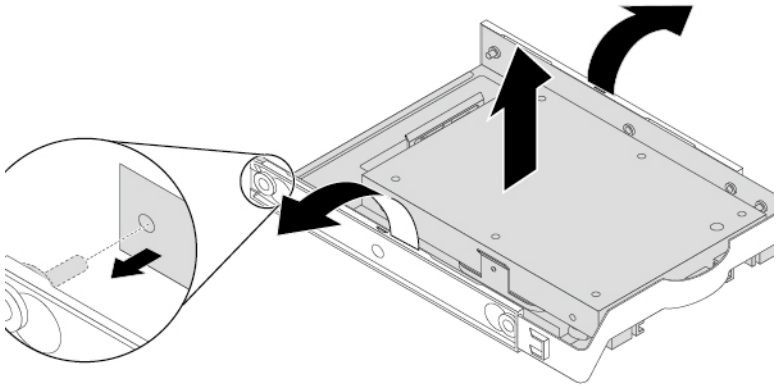

Figure 90. Removing the 2.5-inch to 3.5-inch storage-drive converter from the 3.5-inch storage-drive bracket

d. Remove the four screws that secure the 2.5-inch storage drive. Then lift the storage drive out of the storage-drive converter.

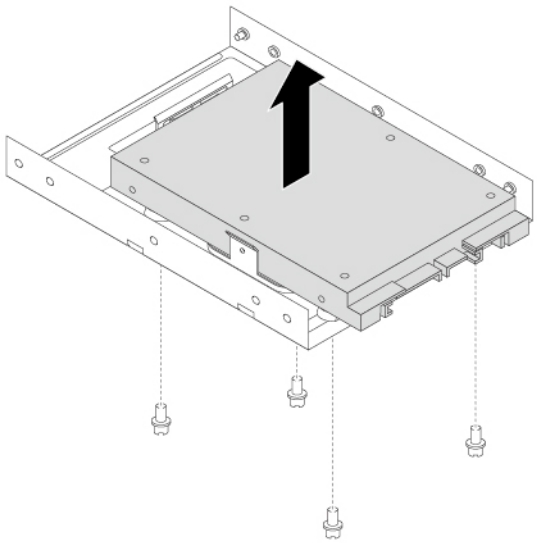

Figure 91. Removing the 2.5-inch storage drive from the storage-drive converter

4. To install a 2.5-inch storage drive, do the following:
   a. Remove the plastic 3.5-inch storage-drive bracket from the storage drive bay. See “Primary storage drive” on page 94 or “Secondary storage drive” on page 96.
   b. Flex the sides of the bracket to remove the 2.5-inch to 3.5-inch storage-drive converter from the bracket.

c. Install a new 2.5-inch storage drive into the storage-drive converter. Then install the four screws to secure the new storage drive to the storage-drive converter.

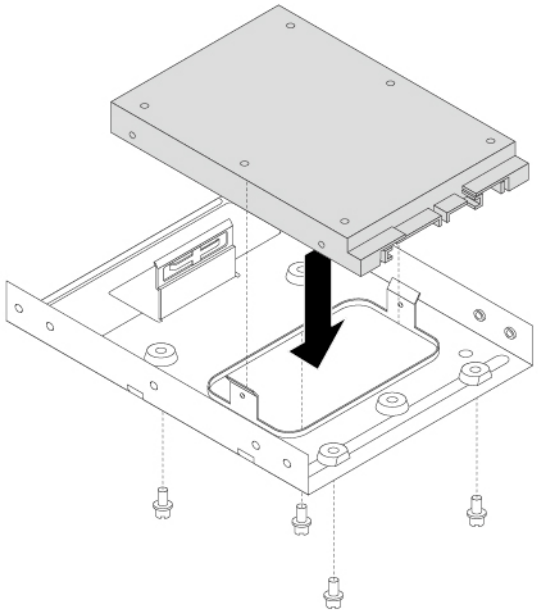

Figure 92. Installing a new 2.5-inch storage drive into the storage-drive converter

d. To install the storage-drive converter into the 3.5-inch storage-drive bracket, flex the bracket and align pin 1, pin 2, pin 3, and pin 4 on the bracket with the corresponding holes in the converter.

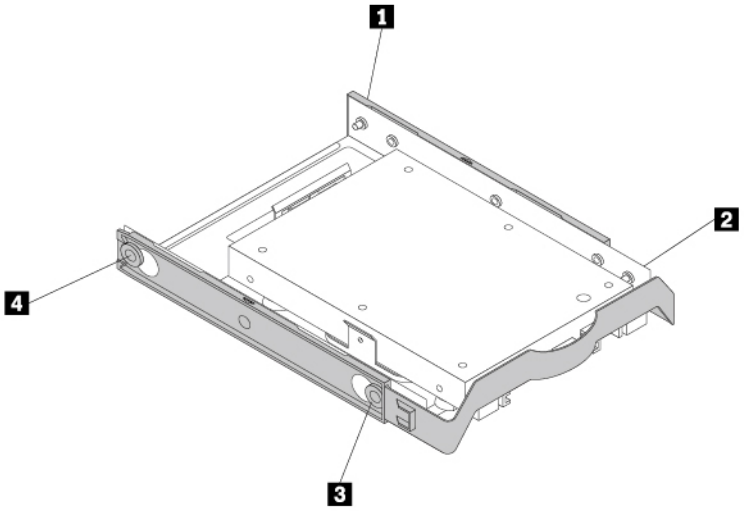

Figure 93. Installing the storage-drive converter together with the 2.5-inch storage drive into the storage-drive bracket

e. Install the storage-drive converter with the bracket into the desired storage drive bay. See “Primary storage drive” on page 94 or “Secondary storage drive” on page 96.

f. Connect the signal cable and the power cable to the storage drive.

What to do next:

- To work with another piece of hardware, go to the appropriate section.
- To complete the installation or replacement, go to “Completing the parts replacement” on page 104.

Front fan assembly

Attention: Do not open your computer or attempt any repair before reading and understanding the “Read this first: Important safety information” on page iii.

Note: The front fan assembly is only available on some models.

To remove or install the front fan assembly, do the following:

1. Prepare your computer. See “Preparing your computer and removing the computer cover” on page 51.
2. Remove the front bezel. See “Front bezel” on page 53.
3. Locate the front fan assembly. See “Computer components” on page 5.
4. To remove the front fan assembly, do the following:

a. Disconnect the front fan assembly cable from the power fan connector on the system board. See “Parts on the system board” on page 6.

b. The front fan assembly is attached to the chassis by four rubber mounts. Stretch the tips of the rubber mounts and gently pull the front fan assembly out of the chassis.

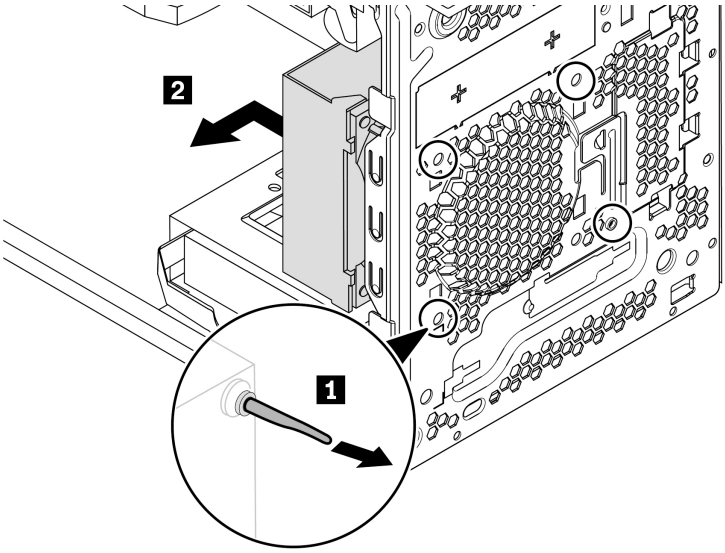

Figure 94. Removing the front fan assembly

5. To install the front fan assembly, do the following:

a. Align the rubber mounts of the front fan assembly with the corresponding holes in the chassis. Push the rubber mounts through the holes.

b. Rotate and pull the tips of the rubber mounts until the front fan assembly is secured.

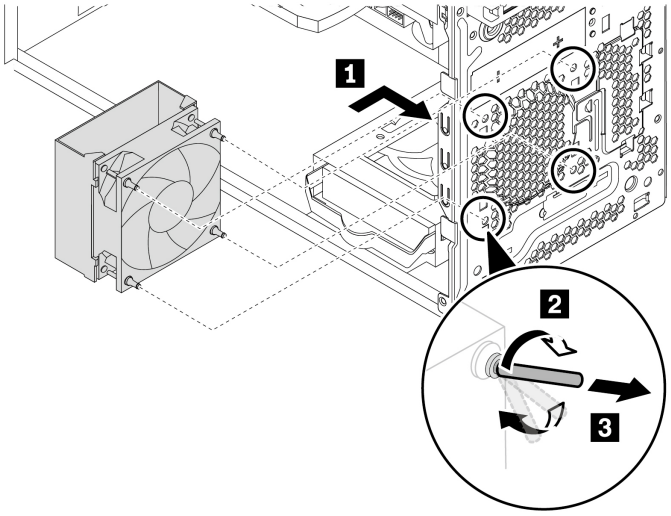

Figure 95. Installing the front fan assembly

c. Connect the front fan assembly cable to the front fan connector on the system board. See “Parts on the system board” on page 6.

What to do next:

- To work with another piece of hardware, go to the appropriate section.
- To complete the installation or replacement, go to “Completing the parts replacement” on page 104.

Rear fan assembly

Attention: Do not open your computer or attempt any repair before reading and understanding the “Read this first: Important safety information” on page iii.

To remove or install the rear fan assembly, do the following:

1. Prepare your computer. See “Preparing your computer and removing the computer cover” on page 51.
2. Locate the rear fan assembly. See “Computer components” on page 5.
3. To remove the rear fan assembly, do the following:
   a. Disconnect the rear fan assembly cable from the system fan connector on the system board. See “Parts on the system board” on page 6.
   b. The rear fan assembly is attached to the chassis by four rubber mounts. Stretch the tips of the rubber mounts and gently pull the rear fan assembly out of the chassis.

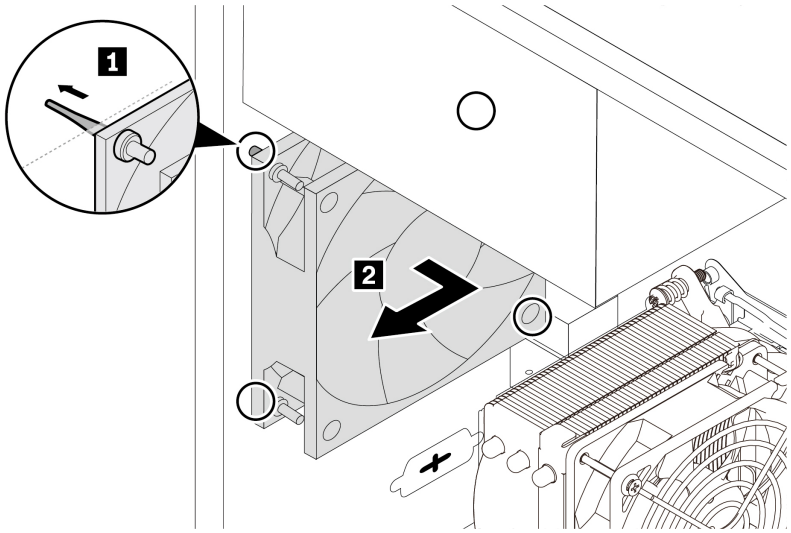

Figure 96. Removing the rear fan assembly

4. To install the rear fan assembly, do the following:
   a. Align the rubber mounts of the rear fan assembly with the corresponding holes in the chassis. Push the rubber mounts through the holes.

b. Rotate and pull the tips of the rubber mounts until the rear fan assembly is secured.

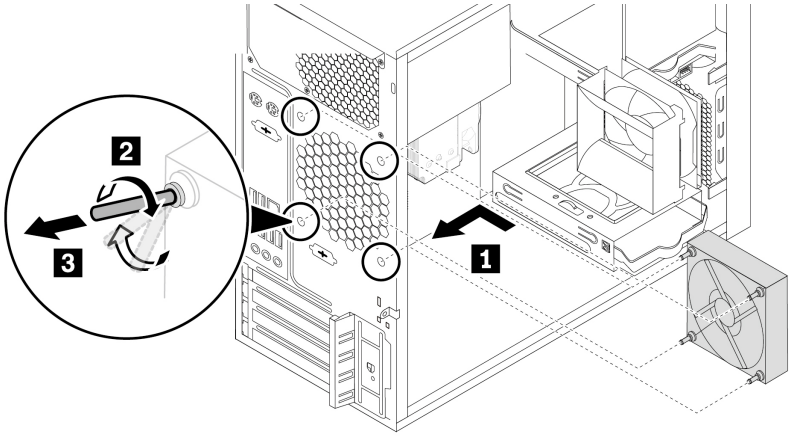

Figure 97. Installing the rear fan assembly

c. Connect the rear fan assembly cable to the rear fan connector on the system board. See “Parts on the system board” on page 6.

What to do next:

- To work with another piece of hardware, go to the appropriate section.
- To complete the installation or replacement, go to “Completing the parts replacement” on page 104.

Completing the parts replacement

CAUTION:

After replacing a CRU, reinstall all protective covers, including the computer cover, before connecting power and operating the computer. This action is important to help prevent unexpected electrical shock and help ensure the containment of an unexpected fire that could happen under extremely rare conditions.

After completing the installation or replacement for all parts, reinstall the computer cover and reconnect cables. Depending on the parts you installed or replaced, you might need to confirm the updated information in the Setup Utility program. Refer to “Using the Setup Utility program” on page 29.

To reinstall the computer cover and reconnect cables to your computer, do the following:

1. Ensure that all components have been reassembled correctly and that no tools or loose screws are left inside your computer. See “Computer components” on page 5 for the locations of various components in your computer.
2. Ensure that the cables are routed correctly before reinstalling the computer cover. Keep cables clear of the hinges and sides of the computer chassis to avoid interference with reinstalling the computer cover.

3. Position the computer cover on the chassis so that the rail guides on the bottom of the computer cover engage the rails on the chassis. Then, push the cover to the front of the computer until it snaps into position.

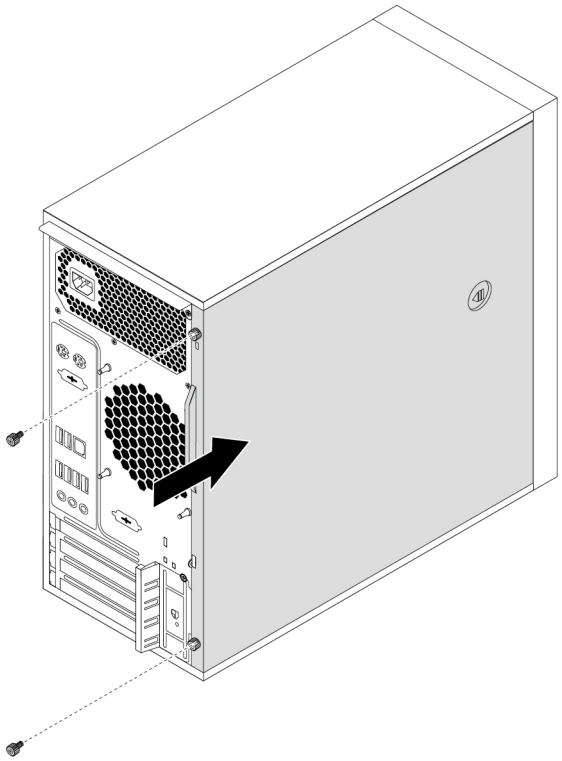

Figure 98. Reinstalling the computer cover

4. Install the screws to secure the computer cover.
5. Place the computer in an upright position.
6. If there is any locking device available, lock the computer cover. See “Preparing your computer and removing the computer cover” on page 51.
7. Reconnect the external cables and power cords to the corresponding connectors on the computer. See “Hardware locations” on page 1.
8. Update the configuration of your computer if necessary. See “Using the Setup Utility program” on page 29.
9. If a newly installed hardware component does not work correctly, update the device driver. See “Keeping your computer current” on page 22.

Chapter 8. Getting information, help, and service

This chapter provides information about getting help and support from Lenovo.

Information resources

You can use the information in this section to access useful resources relating to your computing needs.

Accessing the user guide in various languages

To access the user guide in various languages, go to:
https://support.lenovo.com

Ubuntu and Gnome system

Ubuntu comes with the Gnome desktop by default. Both Ubuntu and Gnome have extensive online help resources:

- https://help.ubuntu.com/lts/ubuntu-help/index.html
- https://help.gnome.org/users/

Safety and warranty

The *Safety, Warranty, and Setup Guide* provided with your computer contains important safety information, product warranty terms, initial setup procedure, and legal notices. Ensure that you read and understand all safety information in the *Safety, Warranty, and Setup Guide* before using your computer.

In addition, read and understand “Read this first: Important safety information” on page iii before using your computer. This preface provides additional safety information that applies to topics and tasks described in this *User Guide*.

Lenovo Web site

The Lenovo Web site (https://www.lenovo.com) provides up-to-date information and services to help you buy, upgrade, and maintain your computer. You also can do the following:

- Shop for desktop and notebook computers, monitors, projectors, upgrades, and accessories for your computer, and special offers.
- Purchase additional services, such as support for hardware, operating systems, programs, network setup and configuration, and custom installations.
- Purchase upgrades and extended hardware repair services.
- Access troubleshooting and support information for your computer model and other supported products.
- Find a Service Provider located near you.

Lenovo Support Web site

Technical support information is available on the Lenovo Support Web site at:
https://support.lenovo.com

This Web site is updated with the latest support information such as the following:

- Drivers and software

© Copyright Lenovo 2020, 2023

- Diagnostic solutions
- Product and service warranty
- Product and parts details
- User guides and manuals
- Knowledge base and frequently asked questions
- Lenovo Support phone numbers

Frequently asked questions

For the answers to frequently asked questions about your computer, go to:
http://www.lenovo.com/support/faq

Help and service

This section provides information about obtaining help and service.

Calling for service

During the warranty period, you can get help and information by telephone through the Customer Support Center. For the warranty period of your computer, go to https://www.lenovo.com/warranty-status. For a list of Lenovo Support phone numbers, go to https://pcsupport.lenovo.com/supportphonelist.

Note: Phone numbers are subject to change without notice. If the number for your country or region is not provided, contact your Lenovo reseller or Lenovo marketing representative.

The following services are available during the warranty period:

- **Problem determination** - Trained service personnel are available to assist you with determining a hardware problem and deciding what action is necessary to fix the problem.
- **Hardware repair** - If the problem is caused by hardware under warranty, trained service personnel are available to provide the applicable level of service.
- **Engineering Change management** - There might be changes that are required after a product has been sold. Lenovo or your reseller will make selected Engineering Changes (ECs) that apply to your hardware available.

These items are not covered by the warranty:
- Replacement or use of parts not manufactured for or by Lenovo or non-warranted Lenovo parts
- Identification of software problem sources
- Configuration of BIOS as part of an installation or upgrade
- Changes, modifications, or upgrades to device drivers
- Installation and maintenance of network operating systems (NOS)
- Installation and maintenance of programs

If possible, be at your computer when you call. Have the following information available:
- Machine type and model
- Serial numbers of your hardware products
- Description of the problem
- Exact wording of any error messages
- Hardware and software configuration information

Using other services

You might travel with your computer or relocate it to a country or region where the machine type for your desktop or notebook computer is sold. In such a situation, your computer might be eligible for International Warranty Service, which automatically entitles you to obtain warranty service throughout the warranty period. Service will be performed by service providers authorized to perform warranty service.

Service methods and procedures vary by country, and some services might not be available in all countries. International Warranty Service is delivered through the method of service (such as depot, carry-in, or on-site service) that is provided in the servicing country. Service centers in certain countries might not be able to service all models of a particular machine type. In some countries, fees and restrictions might apply at the time of service.

To determine whether your computer is eligible for International Warranty Service and to view a list of the countries or regions where service is available, go to https://support.lenovo.com.

Purchasing additional services

During and after the warranty period, you can purchase additional services. Examples of these additional services include:

- Support for hardware, operating systems, and programs
- Network setup and configuration services
- Upgraded or extended hardware repair services
- Custom installation services

Service availability and service name might vary by country or region. For more information about these services, go to the Lenovo Web site at:
https://www.lenovo.com

Appendix A. System memory speed

The Intel Xeon® microprocessor families compatible with this ThinkStation computer feature an integrated memory controller. The memory controller provides the microprocessor with direct access to the system memory. Therefore, the system memory speed will be determined by the memory module type, frequency, size (capacity), the number of memory modules installed, and the microprocessor model.

Notes:

- The actual system memory speed of the memory modules varies depending on the microprocessor model. For example, your computer comes with 2666 MT/s memory modules, but microprocessor only supports up to 2400 MT/s memory modules. Then the system memory speed will be no faster than 2400 MT/s.
- The microprocessor models supported in your computer might vary. For a list of supported microprocessor models, contact the Lenovo Customer Support Center.

© Copyright Lenovo 2020, 2023

Appendix B. Supplemental information about the Ubuntu operating system

In limited countries or regions, Lenovo offers customers an option to order computers with the preinstalled Ubuntu® operating system.

If the Ubuntu operating system is available on your computer, read the following information before you use the computer. Ignore any information related to Windows-based programs, utilities, and Lenovo preinstalled applications in this documentation.

Access the Lenovo Limited Warranty

This product is covered by the terms of the Lenovo Limited Warranty (LLW), version L505-0010-02 08/2011. You can view the LLW in a number of languages from the following Web site. Read the Lenovo Limited Warranty at:
https://www.lenovo.com/warranty/llw_02

The LLW also is preinstalled on the computer. To access the LLW, go to the following directory:

```
/opt/lenovo
```

If you cannot view the LLW either from the Web site or from your computer, contact your local Lenovo office or reseller to obtain a printed version of the LLW.

Access the Ubuntu help system

The Ubuntu help system provides information about how to use the Ubuntu operating system. To access the help system from Home Screen, move your pointer to the Launch bar, and then click the **Help** icon. If you cannot find the **Help** icon from the Launch bar, click the **Search** icon on the bottom left, and type Help to search it.

To learn more about the Ubuntu operating system, go to:
https://www.ubuntu.com

Get support information

If you need help, service, technical assistance, or more information about the Ubuntu operating system or other applications, contact the provider of the Ubuntu operating system or the provider of the application. If you need the service and support for hardware components shipped with your computer, contact Lenovo. For more information about how to contact Lenovo, refer to the *User Guide* and *Safety and Warranty Guide*.

To access the latest *User Guide* and *Safety and Warranty Guide*, go to:
https://pcsupport.lenovo.com

Open source information

This “Device” includes software made publicly available by Lenovo, including software licensed under the General Public License and/or the Lesser General Public License (the “open source software”).

You may obtain a copy of the corresponding source code for any such open source software licensed under the General Public License and/or the Lesser General Public License (or any other license requiring us to make a written offer to provide corresponding source code to you) from Lenovo for a period of three years without charge except for the cost of media, shipping, and handling, upon written request to Lenovo. This offer is valid to anyone in receipt of this Device.

© Copyright Lenovo 2020, 2023

You may send your request in writing to the address below accompanied by a check or money order for $15 to:

Lenovo Legal Department
Attn: Open Source Team / Source Code Requests
8001 Development Dr.
Morrisville, NC 27560

Please include the version of the OS and the version of the Linux Kernel pre-shipped on this Device as part of your request. Be sure to provide a return address.

The open source software is distributed in hope it will be useful, but WITHOUT ANY WARRANTY; without even the implied warranty of MERCHANTABILITY or FITNESS FOR A PARTICULAR PURPOSE. See for example the GNU General Public License and/or the Lesser General Public License for more information.

To view additional information regarding licenses, acknowledgments and required copyright notices for the open source software shipped on your Device, go to `/usr/share/doc/*/copyright`.

Appendix C. Regulatory and TCO Certified information of countries and regions

The latest compliance information is available at:
https://www.lenovo.com/compliance

TCO Certified

Selected models are TCO Certified and bear the TCO Certified logo.

Note: TCO Certified is an international third-party sustainability certification for IT products. For details, go to https://www.lenovo.com/us/en/compliance/tco.

Export classification notice

This product is subject to the United States Export Administration Regulations (EAR) and has an Export Classification Control Number (ECCN) of 5A992.c. It can be re-exported except to any of the embargoed countries in the EAR E1 country list.

Electronic emissions notices

Federal Communications Commission Declaration of Conformity

The following information refers to Lenovo personal computer machine types 30BY, 30BX, and 30C0.

This equipment has been tested and found to comply with the limits for a Class B digital device, pursuant to Part 15 of the FCC Rules. These limits are designed to provide reasonable protection against harmful interference in a residential installation. This equipment generates, uses, and can radiate radio frequency energy and, if not installed and used in accordance with the instructions, may cause harmful interference to radio communications. However, there is no guarantee that interference will not occur in a particular installation. If this equipment does cause harmful interference to radio or television reception, which can be determined by turning the equipment off and on, the user is encouraged to try to correct the interference by one or more of the following measures:

- Reorient or relocate the receiving antenna.
- Increase the separation between the equipment and receiver.
- Connect the equipment into an outlet on a circuit different from that to which the receiver is connected.
- Consult an authorized dealer or service representative for help.

Lenovo is not responsible for any radio or television interference caused by using other than specified or recommended cables and connectors or by unauthorized changes or modifications to this equipment. Unauthorized changes or modifications could void the user's authority to operate the equipment.

This device complies with Part 15 of the FCC Rules. Operation is subject to the following two conditions: (1) this device may not cause harmful interference, and (2) this device must accept any interference received, including interference that may cause undesired operation.

Responsible Party:
Lenovo (United States) Incorporated
1009 Think Place - Building One
Morrisville, NC 27560
Phone Number: 919-294-5900

© Copyright Lenovo 2020, 2023

Industry Canada Class B emission compliance statement

CAN ICES-3(B)/NMB-3(B)

European Union (EU) / United Kingdom (UK) – Radio Equipment Compliance

EU Contact: Lenovo (Slovakia), Landererova 12, 811 09 Bratislava, Slovakia

UK contact: Lenovo, Redwood, Crockford Lane, Basingstoke, RG24 8WQ, UK.

This product is in conformity with all the requirements and essential norms that apply to EU Council Radio Equipment Directive 2014/53/EU on the approximation of the laws of the Member States, as well as the UK Radio Equipment Regulations SI 2017 No. 1206, relating to radio equipment.

The full text of the system EU declaration of conformity is available at:
https://www.lenovo.com/us/en/compliance/eu-doc

The full text of the system UK declaration of conformity is available at:
https://www.lenovo.com/us/en/compliance/uk-doc

Lenovo cannot accept responsibility for any failure to satisfy the protection requirements resulting from a non-recommended modification of the product, including the installation of option cards from other manufacturers. This product has been tested and found to comply with the limits for Class B equipment according to European and UK compliance standards. The limits for Class B equipment were derived for typical residential environments to provide reasonable protection against interference with certified communication devices.

European Union (EU) / United Kingdom (UK) — Electromagnetic Compatibility Compliance

This product is in conformity with the protection requirements of EU Council Directive 2014/30/EU on the approximation of the laws of the Member States, as well as UK SI 2016 No. 1091 with amendments, relating to the electromagnetic compatibility limits for Class B equipment. These Class B requirements are intended to offer adequate protection to broadcast services within residential environments.

German Class B compliance statement

Deutschsprachiger EU Hinweis:

Hinweis für Geräte der Klasse B EU-Richtlinie zur Elektromagnetischen Verträglichkeit

Dieses Produkt entspricht den Schutzanforderungen der EU-Richtlinie 2014/30/EU zur Angleichung der Rechtsvorschriften über die elektromagnetische Verträglichkeit in den EU-Mitgliedsstaaten und hält die Grenzwerte der Klasse B der Norm gemäß Richtlinie.

Um dieses sicherzustellen, sind die Geräte wie in den Handbüchern beschrieben zu installieren und zu betreiben. Des Weiteren dürfen auch nur von der Lenovo empfohlene Kabel angeschlossen werden. Lenovo übernimmt keine Verantwortung für die Einhaltung der Schutzanforderungen, wenn das Produkt ohne

Zustimmung der Lenovo verändert bzw. wenn Erweiterungskomponenten von Fremdherstellern ohne Empfehlung der Lenovo gesteckt/eingebaut werden.

Deutschland:

Einhaltung des Gesetzes über die elektromagnetische Verträglichkeit von Betriebsmitteln

Dieses Produkt entspricht dem „Gesetz über die elektromagnetische Verträglichkeit von Betriebsmitteln“ EMVG (früher „Gesetz über die elektromagnetische Verträglichkeit von Geräten“). Dies ist die Umsetzung der EMV EU-Richtlinie 2014/30/EU in der Bundesrepublik Deutschland.

Zulassungsbescheinigung laut dem Deutschen Gesetz über die elektromagnetische Verträglichkeit von Betriebsmitteln, EMVG vom 20. Juli 2007 (früher Gesetz über die elektromagnetische Verträglichkeit von Geräten), bzw. der EMV EU Richtlinie 2014/30/EU, für Geräte der Klasse B.

Dieses Gerät ist berechtigt, in Übereinstimmung mit dem Deutschen EMVG das EG-Konformitätszeichen - CE - zu führen. Verantwortlich für die Konformitätserklärung nach Paragraf 5 des EMVG ist die Lenovo (Deutschland) GmbH, Meitnerstr. 9, D-70563 Stuttgart.

Informationen in Hinsicht EMVG Paragraf 4 Abs. (1) 4:

Das Gerät erfüllt die Schutzanforderungen nach EN 55024 und EN 55032 Klasse B.

Korean wireless-radio compliance information

무선설비 전파 혼신 (사용주파수 **2400**～**2483.5**, **5725**～**5825** 무선제품해당)
해당 무선설비가 전파혼신 가능성이 있으므로 인명안전과 관련된 서비스는 할 수 없음

Japan VCCI Class B compliance statement

この装置は、クラスB情報技術装置です。この装置は家庭環境で使用する事を目的としていますが、この装置がラジオやテレビジョン受信機に近接して使用されると、受信障害を引き起こすことがあります。取扱書に従って正しい取り扱いをして下さい。

VCCI-B

Japan compliance statement for products which connect to the power mains with rated current less than or equal to 20 A per phase

日本の定格電流が 20A/相 以下の機器に対する高調波電流規制
高調波電流規格 JIS C 61000-3-2 適合品

Japan notice for ac power cord

The ac power cord shipped with your product can be used only for this specific product. Do not use the ac power cord for other devices.

本製品およびオプションに電源コード・セットが付属する場合は、
それぞれ専用のものになっていますので他の電気機器には使用し
ないでください。

Lenovo product service information for Taiwan

委製商/進口商名稱: 荷蘭商聯想股份有限公司台灣分公司
進口商地址: 台北市中山區樂群三路128號16樓
進口商電話: 0800-000-702 (代表號)

Keyboard and mouse compliance statement for Taiwan

本產品隨貨附已取得經濟部標準檢驗局認可之PS/2或USB的鍵盤與滑鼠一組

Eurasian compliance mark



Brazil audio notice

Ouvir sons com mais de 85 decibéis por longos períodos pode provocar danos ao sistema auditivo.

Mexico wireless-radio compliance information

Advertencia: En Mexico la operación de este equipo estásujeta a las siguientes dos condiciones: (1) es posible que este equipo o dispositivo no cause interferencia perjudicial y (2) este equipo o dispositivo debe aceptar cualquier interferencia, incluyendo la que pueda causar su operación no deseada.

Additional regulatory information

For additional regulatory information, refer to the *Regulatory Notice* shipped with your computer. Depending on the configuration of your computer and the country or region where the computer was purchased, you might have received additional printed regulatory notices. All regulatory notices are available on the Lenovo Support Web site in electronic format. To access electronic copies of the documentation, go to https://support.lenovo.com.

Appendix D. WEEE and recycling information of countries and regions

Lenovo encourages owners of information technology (IT) equipment to responsibly recycle their equipment when it is no longer needed. Lenovo offers various programs and services to assist equipment owners in recycling their IT products. The latest environmental information is available at: https://www.lenovo.com/ecodeclaration

Important battery recycling and WEEE information

Take back and recycling information for WEEE and batteries/accumulators in the European Union and the United Kingdom



The crossed-out wheeled bin marking applies only to countries with WEEE and batteries waste regulations including the European Union (EU), and United Kingdom (UK).

Appliances and batteries/accumulators are labeled in accordance with local regulations concerning waste electrical and electronic equipment (WEEE) and waste batteries and waste accumulators. These regulations determine the framework for the return and recycling of used appliances and used batteries/accumulators as applicable within each geography. This label is applied to various products to indicate that the product is not to be thrown away, but rather put in the established collection systems for reclaiming these end of life products.

The label on the battery may also include a chemical symbol for the metal concerned in the battery (Pb for lead, Hg for mercury, and Cd for cadmium).

Users of electrical and electronic equipment (EEE) and users of batteries/accumulators with the crossed-out wheeled bin marking must not dispose of end of life products as unsorted municipal waste, but use the collection framework available to them for the return, recycle, and recovery of WEEE and waste batteries/ accumulators and to minimize any potential effects of EEE and batteries on the environment and human health due to the presence of hazardous substances.

Lenovo electrical and electronic equipment (EEE) may contain parts and components, which at end-of-life might qualify as hazardous waste.

EEE and waste electrical and electronic equipment (WEEE) can be delivered free of charge to the place of sale or any distributor that sells electrical and electronic equipment of the same nature and function as the used EEE or WEEE.

Before placing electrical and electronic equipment (EEE) in the waste collection stream or in waste collection facilities, the end user of equipment containing batteries and/or accumulators must remove those batteries and accumulators for separate collection.

Dispose of lithium batteries and battery packs from Lenovo products:
A coin-cell type lithium battery might be installed inside your Lenovo product. You can find details about the battery in the product documentation. If the battery needs to be replaced, contact your place of purchase or

© Copyright Lenovo 2020, 2023

contact Lenovo for service. If you need to dispose of a lithium battery, insulate it with vinyl tape, contact your place of purchase or a waste-disposal operator, and follow their instructions.

Your Lenovo device might contain a lithium-ion battery pack or a nickel metal hydride battery pack. You can find details on the battery pack in the product documentation. If you need to dispose of a battery pack, insulate it with vinyl tape, contact Lenovo sales, service, or your place of purchase, or a waste-disposal operator, and follow their instructions. You also can refer to the instructions provided in the user guide for your product.

For proper collection and treatment, go to:

https://www.lenovo.com/environment

For additional WEEE information, go to:

https://www.lenovo.com/recycling

WEEE information for Hungary

Lenovo, as a producer, bears the cost incurred in connection with the fulfillment of Lenovo's obligations under Hungary Law No. 197/2014 (VIII.1.) subsections (1)-(5) of section 12.

EU ErP (EcoDesign) Directive (2009/125/EC) - external power adapters (Regulation (EU) 2019/1782), Ecodesign for Energy-Related Products Regulations 2010 - UK SI 2010 No. 2617 (Ext PSU), SI 2020 No. 485 (Ntwk Standby), SI 2014 No. 1290 as amended

Lenovo products are compliant with the EU EcoDesign (ErP) Directive and UK EcoDesign for Energy-related Products Regulations. Refer to the following for details. For EU, refer to the system declaration https://www.lenovo.com/us/en/compliance/eu-doc, and for UK refer to the system declaration https://www.lenovo.com/us/en/compliance/uk-doc.

Recycling information for Japan

Collecting and recycling a disused Lenovo computer or monitor

If you are a company employee and need to dispose of a Lenovo computer or monitor that is the property of the company, you must do so in accordance with the Law for Promotion of Effective Utilization of Resources. Computers and monitors are categorized as industrial waste and should be properly disposed of by an industrial waste disposal contractor certified by a local government. In accordance with the Law for Promotion of Effective Utilization of Resources, Lenovo Japan provides, through its PC Collecting and Recycling Services, for the collecting, reuse, and recycling of disused computers and monitors. For details, visit the Lenovo Web site at https://www.lenovo.com/recycling/japan. Pursuant to the Law for Promotion of Effective Utilization of Resources, the collecting and recycling of home-used computers and monitors by the manufacturer was begun on October 1, 2003. This service is provided free of charge for home-used computers sold after October 1, 2003. For details, visit the Lenovo Web site at https://www.lenovo.com/recycling/japan.

Disposing of Lenovo computer components

Some Lenovo computer products sold in Japan may have components that contain heavy metals or other environmental sensitive substances. To properly dispose of disused components, such as a printed circuit board or drive, use the methods described above for collecting and recycling a disused computer or monitor.

Disposing of disused lithium batteries from Lenovo computers

A button-shaped lithium battery is installed inside your Lenovo computer to provide power to the computer clock while the computer is off or disconnected from the main power source. If you need to replace it with a new one, contact your place of purchase or contact Lenovo for service. If you need to dispose of a disused lithium battery, insulate it with vinyl tape, contact your place of purchase or an industrial-waste-disposal operator, and follow their instructions. Disposal of a lithium battery must comply with local ordinances and regulations.

Recycling information for Brazil

Declarações de Reciclagem no Brasil

Descarte de um Produto Lenovo Fora de Uso

Equipamentos elétricos e eletrônicos não devem ser descartados em lixo comum, mas enviados à pontos de coleta, autorizados pelo fabricante do produto para que sejam encaminhados e processados por empresas especializadas no manuseio de resíduos industriais, devidamente certificadas pelos orgãos ambientais, de acordo com a legislação local.

A Lenovo possui um canal específico para auxiliá-lo no descarte desses produtos. Caso você possua um produto Lenovo em situação de descarte, ligue para o nosso SAC ou encaminhe um e-mail para: reciclar@lenovo.com, informando o modelo, número de série e cidade, a fim de enviarmos as instruções para o correto descarte do seu produto Lenovo.

Battery recycling information for Taiwan



Appendix E. Restriction of Hazardous Substances (RoHS) Directive of countries and regions

The latest environmental information about Lenovo products is available at:
https://www.lenovo.com/ecodeclaration

European Union (EU) / United Kingdom (UK) RoHS

This Lenovo product, with included parts (cables, cords, and so on) meets the requirements of EU Directive 2011/65/EU (as amended by Directive 2015/863/EU) and UK SI 2012 No. 3032 on the restriction of the use of certain hazardous substances in electrical and electronic equipment ("RoHS recast" or "RoHS 2").

For more information about Lenovo worldwide compliance on RoHS, go to:

https://www.lenovo.com/rohs-communication

Turkish RoHS

The Lenovo product meets the requirements of the Republic of Turkey Directive on the Restriction of the Use of Certain Hazardous Substances in Waste Electrical and Electronic Equipment (WEEE).

Türkiye AEEE Yönetmeliğine Uygunluk Beyanı

Bu Lenovo ürünü, T.C. Çevre ve Orman Bakanlığı'nın "Atık Elektrik ve Elektronik Eşyalarda Bazı Zararlı Maddelerin Kullanımının Sınırlandırılmasına Dair Yönetmelik (AEEE)" direktiflerine uygundur.

AEEE Yönetmeliğine Uygundur.

Ukraine RoHS

Цим підтверджуємо, що продукція Леново відповідає вимогам нормативних актів України, які обмежують вміст небезпечних речовин

India RoHS

RoHS compliant as per E-Waste (Management) Rules.

© Copyright Lenovo 2020, 2023

Mainland China RoHS

产品中有害物质的名称及含量

部件名称	有害物质					
	铅(Pb)	汞(Hg)	镉(Cd)	六价铬 (Cr(VI))	多溴连苯 (PBB)	多溴二苯醚 (PBDE)
印刷电路板组件*	X	O	O	O	O	O
硬盘	X	O	O	O	O	O
光驱	X	O	O	O	O	O
内存	X	O	O	O	O	O
电脑I/O 附件	X	O	O	O	O	O
电源	X	O	O	O	O	O
键盘	X	O	O	O	O	O
鼠标	X	O	O	O	O	O
机箱/ 附件	X	O	O	O	O	O
电池	X	O	O	O	O	O

本表格依据 SJ/T 11364 的规定编制。
O：表示该有害物质在该部件所有均质材料中的含量均在 GB/T 26572 规定的限量要求以下。
×：表示该有害物质至少在该部件的某一均质材料中的含量超出 GB/T 26572 规定的限量要求。
注：表中标记“×”的部件，皆因全球技术发展水平限制而无法实现有害物质的替代。
印刷电路板组件*：包括印刷电路板及其零部件、电容和连接器
根据型号的不同，可能不会含有以上的所有部件，请以实际购买机型为准



在中华人民共和国境内销售的电子信息产品必须标识此标志，标志内的数字代表在正常使用状态下的产品的环保使用期限

Taiwan RoHS

單元	限用物質及其化學符號					
	鉛 (Pb)	汞 (Hg)	鎘 (Cd)	六價鉻 (Cr^{+6})	多溴聯苯 (PBB)	多溴二苯醚 (PBDE)
印刷電路板組件	–	○	○	○	○	○
硬碟	–	○	○	○	○	○
光碟機	–	○	○	○	○	○
記憶體	–	○	○	○	○	○
電腦I/O配件	–	○	○	○	○	○
電源供應器	–	○	○	○	○	○
鍵盤	–	○	○	○	○	○
滑鼠	–	○	○	○	○	○
機殼/配件	–	○	○	○	○	○

備考1. 〝超出0.1 wt %〞及〝超出0.01 wt %〞係指限用物質之百分比含量超出百分比含量基準值。
備考2. 〝○〞係指該項限用物質之百分比含量未超出百分比含量基準值。
備考3. 〝–〞係指該項限用物質為排除項目。

Appendix F. ENERGY STAR model information

ENERGY STAR® is a joint program of the U.S. Environmental Protection Agency and the U.S. Department of Energy aimed at saving money and protecting the environment through energy efficient products and practices.

Lenovo is proud to offer products with the ENERGY STAR certified designation. Lenovo computers, if carry an ENERGY STAR mark, have been designed and tested to conform to the ENERGY STAR program requirements for computers as prescribed by the U.S. Environmental Protection Agency. For a certified computer, an ENERGY STAR mark may be affixed to the product, the product packaging, or displayed electronically on the E-label screen or the power settings interface.

By using ENERGY STAR compliant products and taking advantage of the power-management features of your computer, you reduce the consumption of electricity. Reduced electrical consumption contributes to potential financial savings, a cleaner environment, and the reduction of greenhouse gas emissions. For more information about ENERGY STAR, go to https://www.energystar.gov/.

Lenovo encourages you to make efficient use of energy an integral part of your day-to-day operations. To help in this endeavor, set the following power-management features to take effect when your computer has been inactive for a specified duration:

Table 1. Default power plan (when plugged into ac power)

• Turn off the display: After 5 minutes • Put the computer to sleep: After 60 minutes

To awaken your computer from Sleep mode, press any key on your keyboard.

To change power settings, do the following:

1. Open the system menu from the top-right corner and click **Settings**.
2. Click **Power**.
3. Modify the power settings as desired.

© Copyright Lenovo 2020, 2023

Appendix G. Notices

Lenovo may not offer the products, services, or features discussed in this document in all countries. Consult your local Lenovo representative for information on the products and services currently available in your area. Any reference to a Lenovo product, program, or service is not intended to state or imply that only that Lenovo product, program, or service may be used. Any functionally equivalent product, program, or service that does not infringe any Lenovo intellectual property right may be used instead. However, it is the user's responsibility to evaluate and verify the operation of any other product, program, or service.

Lenovo may have patents or pending patent applications covering subject matter described in this document. The furnishing of this document does not give you any license to these patents. You can send license inquiries, in writing, to:

Lenovo (United States), Inc.
8001 Development Drive
Morrisville, NC 27560
U.S.A.
Attention: Lenovo Director of Licensing

LENOVO PROVIDES THIS PUBLICATION "AS IS" WITHOUT WARRANTY OF ANY KIND, EITHER EXPRESS OR IMPLIED, INCLUDING, BUT NOT LIMITED TO, THE IMPLIED WARRANTIES OF NON-INFRINGEMENT, MERCHANTABILITY OR FITNESS FOR A PARTICULAR PURPOSE. Some jurisdictions do not allow disclaimer of express or implied warranties in certain transactions, therefore, this statement may not apply to you.

This information could include technical inaccuracies or typographical errors. Changes are periodically made to the information herein; these changes will be incorporated in new editions of the publication. Lenovo may make improvements and/or changes in the products and/or the programs described in this publication at any time without notice.

The products described in this document are not intended for use in implantation or other life support applications where malfunction may result in injury or death to persons. The information contained in this document does not affect or change Lenovo product specifications or warranties. Nothing in this document shall operate as an express or implied license or indemnity under the intellectual property rights of Lenovo or third parties. All information contained in this document was obtained in specific environments and is presented as an illustration. The result obtained in other operating environments may vary.

Lenovo may use or distribute any of the information you supply in any way it believes appropriate without incurring any obligation to you.

Any references in this publication to non-Lenovo Web sites are provided for convenience only and do not in any manner serve as an endorsement of those Web sites. The materials at those Web sites are not part of the materials for this Lenovo product, and use of those Web sites is at your own risk.

Any performance data contained herein was determined in a controlled environment. Therefore, the result obtained in other operating environments may vary significantly. Some measurements may have been made on development-level systems and there is no guarantee that these measurements will be the same on generally available systems. Furthermore, some measurements may have been estimated through extrapolation. Actual results may vary. Users of this document should verify the applicable data for their specific environment.

© Copyright Lenovo 2020, 2023

Appendix H. Trademarks

LENOVO, LENOVO logo, THINKSTATION, and THINKSTATION logo are trademarks of Lenovo.

Microsoft, Windows, and Windows Media are trademarks of the Microsoft group of companies.

Intel, Thunderbolt, and Xeon are trademarks of Intel Corporation in the U.S. and/or other countries.

Linux is a registered trademark of Linus Torvalds.

DisplayPort and Mini DisplayPort are trademarks of the Video Electronics Standards Association.

Ubuntu is a registered trademark of Canonical Ltd.

All other trademarks are the property of their respective owners. © 2021 Lenovo.

© Copyright Lenovo 2020, 2023