P360 Tower
Hardware Maintenance Manual



Sixth Edition (August 2025)

© Copyright Lenovo 2022, 2025.

LIMITED AND RESTRICTED RIGHTS NOTICE: If data or software is delivered pursuant to a General Services Administration “GSA” contract, use, reproduction, or disclosure is subject to restrictions set forth in Contract No. GS-35F-05925.

Contents

Chapter 1. Important safety information 1

General safety 1
Electrical safety 2
Safety inspection guide 3
Handling electrostatic discharge-sensitive devices 4
Grounding requirements 4
Safety notices (multi-lingual translations) 4

Chapter 2. Important service information 27

Strategy for replacing FRUs 27
- Strategy for replacing a hard disk drive or a solid-state drive 27
- Important notice for replacing a system board 27
- How to use error codes 28

Strategy for replacing FRUs for CTO, special-bid, and standard models. 28
- Product definition 28
- FRU identification 28

Chapter 3. Product overview 29

Front 29
Rear 30

Chapter 4. Service checkout and symptom-to-FRU index 31

Service checkout 31
- Problem determination tips 31

Symptom-to-FRU index 32
- Hard disk drive boot error 32
- Power supply problems 33
- Beep symptoms 33
- POST error codes 34
- Miscellaneous error conditions 34
- Undetermined problems 36

Chapter 5. RAID 38

What is RAID 38
RAID Level 38
Configure the system BIOS to enable RAID functionality 38
Configure RAID in UEFI mode 39

Chapter 6. Diagnostics 40

Basic procedure for resolving computer problems 40
UEFI diagnostic program 40
Lenovo diagnostic tools 41
The Vantage app 41
Self-help resources 41

Chapter 7. Hardware replacement . . 43

Handling static-sensitive devices 43
Service tool kit 43
Major FRUs and CRUs 45
System board 49
Internal storage drives 51
Removing and installing hardware 52
- External options 52
- Computer cover 52
- Slim optical drive 53
- Front bezel 54
- Primary storage drives 55
- 3.5-inch primary storage drive cage 60
- Slim-optical-drive cage 61
- Secondary storage drives 62
- Storage drive in the front-access storage enclosure 64
- PCI-Express card 69
- Graphics card fan 71
- Graphics card holder 72
- Graphics card. 73
- M.2 solid-state drive and heat sink 76
- M.2 solid-state drive bracket 80
- Front fan 81
- Rear fan 82
- Heat-sink-and-fan assembly 83
- Chassis beam. 86
- Memory module 87
- Power supply assembly 88
- E-lock 89
- Front IO bracket, power button cable, and card reader. 90
- Flexible IO board 92
- Internal speaker 92
- Wi-Fi card 93
- Front Wi-Fi antenna 93
- Rear Wi-Fi antenna. 94
- ThinkStation LED 96
- Thermal sensor 97
- Cover presence switch cable and bracket . . . 98
- Microprocessor 99
- System board 100
- VRM heat sink 102

© Copyright Lenovo 2022, 2025

Chapter 8. Notices and trademarks 104

About this manual

This manual provides service and reference information for ThinkStation® computers listed on the front cover.

Illustrations in this manual might look different from your product.

Use this manual along with the advanced diagnostic tests to troubleshoot problems.

Important: It is recommended that these products be repaired by trained service technicians. For customers electing to repair their own ThinkStation products, please follow all instructions carefully. Use this manual along with the advanced diagnostic tests to troubleshoot problems effectively. Before servicing a ThinkStation computer, be sure to read and understand Chapter 1 “Important safety information” on page 1.

Chapter 1. Important safety information

General safety

Follow these rules to ensure general safety:

- Observe good housekeeping in the area of the machines during and after maintenance.
- When lifting any heavy object:
  1. Ensure you can stand safely without slipping.
  2. Distribute the weight of the object equally between your feet.
  3. Use a slow lifting force. Never move suddenly or twist when you attempt to lift.
  4. Lift by standing or by pushing up with your leg muscles; this action removes the strain from the muscles in your back.

     Attention: Do not attempt to lift any objects that weigh more than 16 kg (35 lb) or objects that you think are too heavy for you.
- Do not perform any action that causes hazards to the customer, or that makes the equipment unsafe.
- Before you start the machine, ensure that other people are not in a hazardous position.
- Place removed covers and other parts in a safe place, away from all personnel, while you are servicing the machine.
- Keep your tool case away from walk areas so that other people will not trip over it.
- Do not wear loose clothing that can be trapped in the moving parts of a machine. Ensure that your sleeves are fastened or rolled up above your elbows. If your hair is long, fasten it.
- Insert the ends of your necktie or scarf inside clothing or fasten it with a nonconductive clip, approximately 8 centimeters (3 inches) from the end.
- Do not wear jewelry, chains, metal-frame eyeglasses, or metal fasteners for your clothing.

  Remember: Metal objects are good electrical conductors.
- Wear safety glasses when you are: hammering, drilling, soldering, cutting wire, attaching springs, using solvents, or working in any other conditions that might be hazardous to your eyes.
- After service, reinstall all safety shields, guards, labels, and ground wires. Replace any safety device that is worn or defective.
- Reinstall all covers correctly before returning the machine to the customer.

CAUTION:



Keep fingers and other parts of your body away from hazardous, moving parts. If you suffer an injury, seek medical care immediately.

CAUTION:



Avoid contact with hot components inside the computer. During operation, some components become hot enough to burn the skin. Before you open the computer cover, turn off the computer, disconnect power, and wait approximately 10 minutes for the components to cool.

© Copyright Lenovo 2022, 2025

Electrical safety



CAUTION:
Electrical current from power, telephone, and communication cables can be hazardous. To avoid personal injury or equipment damage, disconnect the attached power cords, telecommunication systems, networks, and modems before you open the computer covers, unless instructed otherwise in the installation and configuration procedures.

Observe the following rules when working on electrical equipment.

Important: Use only approved tools and test equipment. Some hand tools have handles covered with a soft material that does not insulate you when working with live electrical currents. Many customers have, near their equipment, rubber floor mats that contain small conductive fibers to decrease electrostatic discharges. Do not use this type of mat to protect yourself from electrical shock.

- Find the room emergency power-off (EPO) switch, disconnecting switch, or electrical outlet. If an electrical accident occurs, you can then operate the switch or unplug the power cord quickly.
- Do not work alone under hazardous conditions or near equipment that has hazardous voltages.
- Disconnect all power before:
  - Performing a mechanical inspection
  - Working near power supplies
  - Removing or installing Field Replaceable Units (FRUs)
- Before you start to work on the machine, unplug the power cord. If you cannot unplug it, ask the customer to power-off the wall box that supplies power to the machine and to lock the wall box in the off position.
- If you need to work on a machine that has exposed electrical circuits, observe the following precautions:
  - Ensure that another person, familiar with the power-off controls, is near you.
    Remember: Another person must be there to switch off the power, if necessary.
  - Use only one hand when working with powered-on electrical equipment; keep the other hand in your pocket or behind your back.
    Remember: There must be a complete circuit to cause electrical shock. By observing the above rule, you may prevent a current from passing through your body.
  - When using a tester, set the controls correctly and use the approved probe leads and accessories for that tester.
  - Stand on suitable rubber mats (obtained locally, if necessary) to insulate you from grounds such as metal floor strips and machine frames.

  Observe the special safety precautions when you work with very high voltages; these instructions are in the safety sections of maintenance information. Use extreme care when measuring high voltages.
- Regularly inspect and maintain your electrical hand tools for safe operational condition.
- Do not use worn or broken tools and testers.
- *Never assume* that power has been disconnected from a circuit. First, *check* that it has been powered-off.
- Always look carefully for possible hazards in your work area. Examples of these hazards are moist floors, nongrounded power extension cables, power surges, and missing safety grounds.
- Do not touch live electrical circuits with the reflective surface of a plastic dental mirror. The surface is conductive; such touching can cause personal injury and machine damage.
- Do not service the following parts with the power on when they are removed from their normal operating places in a machine:

  - Power supply units
  - Pumps
  - Blowers and fans
  - Motor generators

  and similar units. (This practice ensures correct grounding of the units.)
- If an electrical accident occurs:
  - Use caution; do not become a victim yourself.
  - Switch off power.
  - Send another person to get medical aid.

Safety inspection guide

The intent of this inspection guide is to assist you in identifying potentially unsafe conditions on these products. Each machine, as it was designed and built, had required safety items installed to protect users and service personnel from injury. This guide addresses only those items. However, good judgment should be used to identify potential safety hazards due to attachment of features or options not covered by this inspection guide.

If any unsafe conditions are present, you must determine how serious the apparent hazard could be and whether you can continue without first correcting the problem.

Consider these conditions and the safety hazards they present:

- Electrical hazards, especially primary power (primary voltage on the frame can cause serious or fatal electrical shock).
- Explosive hazards, such as a damaged CRT face or bulging capacitor
- Mechanical hazards, such as loose or missing hardware

The guide consists of a series of steps presented in a checklist. Begin the checks with the power off, and the power cord disconnected.

Checklist:

1. Check exterior covers for damage (loose, broken, or sharp edges).
2. Power-off the computer. Disconnect the power cord.
3. Check the power cord for:
   a. A third-wire ground connector in good condition. Use a meter to measure third-wire ground continuity for 0.1 ohm or less between the external ground pin and frame ground.
   b. The power cord should be the appropriate type as specified in the parts listings.
   c. Insulation must not be frayed or worn.
4. Remove the cover.
5. Check for any obvious alterations. Use good judgment as to the safety of any alterations.
6. Check inside the unit for any obvious unsafe conditions, such as metal filings, contamination, water or other liquids, or signs of fire or smoke damage.
7. Check for worn, frayed, or pinched cables.
8. Check that the power-supply cover fasteners (screws or rivets) have not been removed or tampered with.

Handling electrostatic discharge-sensitive devices

Any computer part containing transistors or integrated circuits (ICs) should be considered sensitive to electrostatic discharge (ESD). ESD damage can occur when there is a difference in charge between objects. Protect against ESD damage by equalizing the charge so that the machine, the part, the work mat, and the person handling the part are all at the same charge.

Notes:

1. Use product-specific ESD procedures when they exceed the requirements noted here.
2. Make sure that the ESD protective devices you use have been certified (ISO 9000) as fully effective.

When handling ESD-sensitive parts:

- Keep the parts in protective packages until they are inserted into the product.
- Avoid contact with other people while handling the part.
- Wear a grounded wrist strap against your skin to eliminate static on your body.
- Prevent the part from touching your clothing. Most clothing is insulative and retains a charge even when you are wearing a wrist strap.
- Use the black side of a grounded work mat to provide a static-free work surface. The mat is especially useful when handling ESD-sensitive devices.
- Select a grounding system, such as those listed below, to provide protection that meets the specific service requirement.

  Note: The use of a grounding system is desirable but not required to protect against ESD damage.

  – Attach the ESD ground clip to any frame ground, ground braid, or green-wire ground.
  – Use an ESD common ground or reference point when working on a double-insulated or battery-operated system. You can use coax or connector-outside shells on these systems.
  – Use the round ground-prong of the ac plug on ac-operated computers.

Grounding requirements

Electrical grounding of the computer is required for operator safety and correct system function. Proper grounding of the electrical outlet can be verified by a certified electrician.

Safety notices (multi-lingual translations)

The caution and danger safety notices in this section are provided in the following languages:

- English
- Arabic
- Brazilian/Portuguese
- Chinese (simplified)
- Chinese (traditional)
- French
- German
- Hebrew
- Italian
- Korean

- Spanish



DANGER

Electrical current from power, telephone and communication cables is hazardous.

To avoid a shock hazard:

- **Do not connect or disconnect any cables or perform installation, maintenance, or reconfiguration of this product during an electrical storm.**
- **Connect all power cords to a properly wired and grounded electrical outlet.**
- **Connect to properly wired outlets any equipment that will be attached to this product.**
- **When possible, use one hand only to connect or disconnect signal cables.**
- **Never turn on any equipment when there is evidence of fire, water, or structural damage.**
- **Disconnect the attached power cords, telecommunications systems, networks, and modems before you open the device covers, unless instructed otherwise in the installation and configuration procedures.**
- **Connect and disconnect cables as described in the following tables when installing, moving, or opening covers on this product or attached devices.**

To Connect	To Disconnect
1. Turn everything OFF. 2. First, attach all cables to devices. 3. Attach signal cables to connectors. 4. Attach power cords to outlet. 5. Turn device ON.	1. Turn everything OFF. 2. First, remove power cords from outlet. 3. Remove signal cables from connectors. 4. Remove all cables from devices.



CAUTION:
If your system has a module containing a lithium battery, replace it only with the same module type made by the same manufacturer. The battery contains lithium and can explode if not properly used, handled, or disposed of. *Do not:*

- **Throw or immerse into water**
- **Heat to more than 100°C (212°F)**
- **Repair or disassemble**

Dispose of the battery as required by local ordinances or regulations.



CAUTION:
When laser products (such as CD-ROMs, DVD-ROM drives, fiber optic devices, or transmitters) are installed, note the following:

- **Do not remove the covers. Removing the covers of the laser product could result in exposure to hazardous laser radiation. There are no serviceable parts inside the device.**
- **Use of controls or adjustments or performance of procedures other than those specified herein might result in hazardous radiation exposure.**

DANGER

Some laser products contain an embedded Class 3A or Class 3B laser diode. Note the following: Laser radiation when open. Do not stare into the beam, do not view directly with optical instruments, and avoid direct exposure to the beam.





≥18 kg (37 lb)



≥32 kg (70.5 lb)



≥55 kg (121.2 lb)

CAUTION:
Use safe practices when lifting.



CAUTION:
The power control button on the device and the power switch on the power supply do not turn off the electrical current supplied to the device. The device also might have more than one power cord. To remove all electrical current from the device, ensure that all power cords are disconnected from the power source.

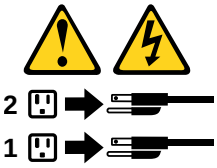



خـــطر

التيـار الكـهربـي المـوجـود بمصـدر الطـاقـة أو أجـهزة التليفـون أو أسـلاك الإتـصالات يشـكل خـطورة.

لـتفادي مخـاطـر الصـدمـات الكـهربـائـية:

لا تحاول توصيل أو فصل أي أسـلاك أو القـيام بعـمليات تـركيب أو صـيانـة أوإعـادة توصـيف لـهذا المنتج أثـناء وجـود عاصـفة كـهربـائـية.

يجـب تـوصـيل كـل أسـلاك الكـهربـاء فـي مخـارج كـهربـاء ذات تـوصـيلات أسـلاك وتـوصـيلات أرضـية صحيـحة
يجـب تـوصـيل أي جـهاز سـيتم الحـاقه بـهذا المـنتج فـي مخارج كـهربـاء ذات تـوصـيلات أسـلاك صحيحة.

وإن أمـكن يـجب اسـتخدام يـد واحـدة فـقط فـي تـوصـيل أو فصـل أسلاك الإشـارة.

لا تحـاول تشغـيل أي جـهاز إذا كـان هنـاك أثـر لحـرق أو مـياه أو تـلف بالمكـونـات
يجـب فصـل أسـلاك الكـهربـاء وأنـظمة الاتصـالات وشـبكات الاتصـال وأجـهزة المـودم الملحـقة قـبل فـتح أغطية الجهاز، مـالـم يـتم طـلب خـلاف ذلك فـي التـعليـمات الخـاصة بالتـركيب والتـوصـيف.
قم بتوصيل وفصل الأسلاك كما هو موضح في الجدول التالي وذلك عند القيام بعمليات التركيب أو النقل أو فتح أغطية هذا المنتج أو الأجهزة الملحقة.

للتوصيل:	للفصل:
قم بإيقاف كل شيء.	قم بإيقاف كل شيء.
أولا، قم بتوصيل كل الأسلاك بالأجهزة.	أولا، قم بفصل كل أسلاك الكهرباء من المخرج.
قم بتوصيل أسلاك الإشارة في لموصلات.	قم بفصل أسلاك الإشارة من الموصلات.
قم بتوصيل أسلاك الكهرباء في المخارج.	قم بفصل كل الأسلاك من الأجهزة.
قم بتشغيل الجهاز.	



تنبيـــه :

اذا كان النظام الخاص يستخدم معه بطارية ليثيوم قم باستبدالها بنفس النوع الذي تم صناعته من خلال نفس المصنع. تحتوي البطارية على مادة الليثيوم ويمكن أن تنفجرفي حالة عدم استخدامها أو التعامل معها بطريقة صحيحة أو عند التخلص منها بطريقة خطأ.

لا تقم بـــ:

- **القاء البطارية أو غمرها في الماء**
- **تسخينها أعلى من ١٠٠ درجة مئوية°و(٢١٢ ° فهرنـهيت)**
- **بتصليحها أو فكها**

تخلص من البطارية طبقا للقانون أو النظام المحلي .



تنبيـــه :
أثناء تركيب منتجات ليزر (مثل CD-ROMsأو وحدة تشغيل DVDأو أجهزة Fiber Optic أو وحدات الارسال) يجب مراعاة الآتي:

لا تنزع الأغطية. قد ينتج عن نزع أغطية منتج الليزر انفجار أشعة الليزر شديدة الخطورة.
لا يوجد أجزاء يمكن تغييرها داخل الجهاز. قد ينتج عن استخدام تحكمات أو تعديلات أو عمل أي تصرفات أخرى تخالف ما هو محددا هنا الى انفجار أشعة شديدة الخطورة.



خطـــر

تحتوى بعض منتجات الليزر على الفئة دايود ليزر مدمج من الفئة Class 3Aأو Class 3B. يجب مراعاة الآتي .

أشعة الليزر عند الفتح. لا تحدق الى الاشعاع و لا تنظر اليه مباشرة بواسطة أي أجهزة مرئية وتجنب التعرض المباشر للاشعاع .



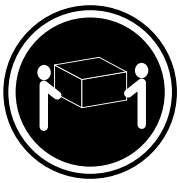

≥18 kg (37 lb)

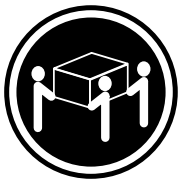

≥32 kg (70.5 lb)

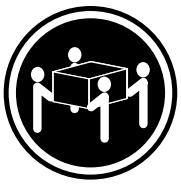

≥55 kg (121.2 lb)

تنبيه :
يجب استخدام ممارسات آمنة عند الرفع



تنبيـــه :
لا يقم زر التحكم في التشغيل الموجود على الجهاز والمفتاح الكهربائي الموجود على لوحة التحكم بايقاف التيار الكهربائي المار بالجهاز. قد يكون للجهاز أكثر من سلك كهربائي واحد. لايقاف التيار الكهربائي المار بالجهاز، تأكد من فصل جميع أسلاك الكهرباء من مصدر الكهرباء .

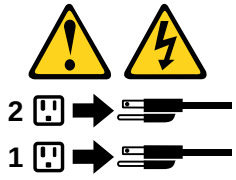



PERIGO

A corrente elétrica proveniente de cabos de alimentação, de telefone e de comunicações é perigosa.

Para evitar risco de choque elétrico:

- Não conecte nem desconecte nenhum cabo ou execute instalação, manutenção ou reconfiguração deste produto durante uma tempestade com raios.
- Conecte todos os cabos de alimentação a tomadas elétricas corretamente instaladas e aterradas.
- Todo equipamento que for conectado a este produto deve ser conectado a tomadas corretamente instaladas.
- Quando possível, utilize apenas uma das mãos para conectar ou desconectar cabos de sinal.
- Nunca ligue nenhum equipamento quando houver evidência de fogo, água ou danos estruturais.
- Antes de abrir tampas de dispositivos, desconecte cabos de alimentação, sistemas de telecomunicação, redes e modems conectados, a menos que especificado de maneira diferente nos procedimentos de instalação e configuração.
- Conecte e desconecte os cabos conforme descrito na tabela apresentada a seguir ao instalar, mover ou abrir tampas deste produto ou de dispositivos conectados.

Para Conectar:	**Para Desconectar:**
1. DESLIGUE Tudo. 2. Primeiramente, conecte todos os cabos aos dispositivos. 3. Conecte os cabos de sinal aos conectores. 4. Conecte os cabos de alimentação às tomadas. 5. LIGUE os dispositivos.	1. DESLIGUE Tudo. 2. Primeiramente, remova os cabos de alimentação das tomadas. 3. Remova os cabos de sinal dos conectores. 4. Remova todos os cabos dos dispositivos.



CUIDADO:

Se o seu sistema possui um módulo com uma bateria de lítio, substitua-o apenas por um módulo do mesmo tipo e do mesmo fabricante. A bateria contém lítio e pode explodir se não for utilizada, manuseada ou descartada de maneira correta.

Não:

- Jogue ou coloque na água
- Aqueça a mais de 100°C (212°F)
- Conserte nem desmonte

Descarte a bateria conforme requerido pelas leis ou regulamentos locais.



PRECAUCIÓN:

Quando produtos a laser (como unidades de CD-ROMs, unidades de DVD-ROM, dispositivos de fibra ótica ou transmissores) estiverem instalados, observe o seguinte:

- Não remova as tampas. A remoção das tampas de um produto a laser pode resultar em exposição prejudicial à radiação de laser. Não existem peças que podem ser consertadas no interior do dispositivo.
- A utilização de controles ou ajustes ou a execução de procedimentos diferentes dos especificados aqui pode resultar em exposição prejudicial à radiação.

PERIGO

Alguns produtos a laser contêm diodo de laser integrado da Classe 3A ou da Classe 3B. Observe o seguinte:

Radiação a laser quando aberto. Não olhe diretamente para o feixe a olho nu ou com instrumentos ópticos e evite exposição direta ao feixe.



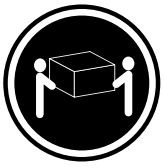

≥18 kg (37 lb)



≥32 kg (70.5 lb)



≥55 kg (121.2 lb)

CUIDADO:

Utilize procedimentos de segurança para levantar equipamentos.



CUIDADO:

O botão de controle de alimentação do dispositivo e o botão para ligar/desligar da fonte de alimentação não desligam a corrente elétrica fornecida ao dispositivo. O dispositivo também pode ter mais de um cabo de alimentação. Para remover toda a corrente elétrica do dispositivo, assegure que todos os cabos de alimentação estejam desconectados da fonte de alimentação.

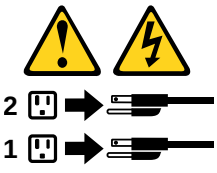



危险

电源、电话和通信电缆中的电流是危险的。

为避免电击危险：

- 请勿在雷电期间连接或断开任何电缆的连接，或者对本产品进行安装、维护或重新配置。
- 将所有电源线连接到正确连线和妥善接地的电源插座。
- 将所有要连接到该产品的设备连接到正确连线的插座。
- 如果可能，请仅使用一只手来连接或断开信号电缆的连接。
- 切勿在有火、水、结构损坏迹象的情况下开启任何设备。
- 在打开设备外盖之前请断开已连接的电源线、远程通信系统、网络和调制解调器，除非在安装和配置过程中另有说明。
- 当安装、移动或打开该产品或连接设备的外盖时，请按照下表所述来连接或断开电缆的连接。

要连接	要断开连接
1. 切断所有电源。 2. 首先将所有电缆连接到设备。 3. 将信号电缆连接到接口。 4. 将电源线连接到插座。 5. 开启设备。	1. 切断所有电源。 2. 首先从插座上拔出电源线。 3. 从接口上拔出信号电缆。 4. 从设备上拔出所有电缆。



警告：
如果您的系统有包含锂电池的模块,请仅使用同一制造商生产的相同模块类型来替换该模块。
该电池中含有锂，如果使用、操作或处理不当，可能会发生爆炸。

切勿：

- 投入或浸入水中
- 加热到 100°C（212°F）以上
- 维修或拆卸

请按照当地法令或条例的要求处理电池。



警告：
安装激光产品（例如 CD-ROM、DVD-ROM 驱动器、光纤设备或发射设备）时，请注意以下声明：

- 请勿卸下外盖。卸下激光产品的外盖可能导致遭受激光辐射的危险。该设备内没有可维修的部件。
- 如果不按照此处指定的过程进行控制、调整或操作，则有可能导致遭受辐射的危险。



危险

某些激光产品包含嵌入式 3A 类或 3B 类激光二极管。请注意以下声明：

打开后有激光辐射。请勿注视光束，请勿直接用光学仪器查看，并请避免直接暴露在光束中。





≥18 千克（37 磅）



≥32 千克（70.5 磅）



≥55 千克（121.2 磅）

警告：
抬起时请采取安全措施。



警告：
设备上的电源控制按钮和电源上的电源开关不会切断供给该设备的电流。该设备还可能有多条电源线。要切断该设备的所有电流，请确保所有电源线都与电源断开连接。

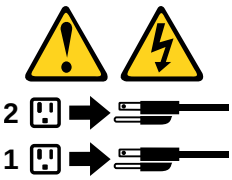



危險

電源、電話及通訊纜線上的電流都具有危險性。
若要避免觸電危險：
- 請勿在雷雨期間，連接或拔除纜線、執行安裝、維護或重新配置本產品。
- 將所有電源線連接到正確配線及接地的電源插座。
- 任何與本產品連接的設備都必須連接到配線妥當的電源插座。
- 請盡可能用單手連接或拔除信號線。
- 發生火災、水災或結構損害時，絕對不要開啟任何設備。
- 除非在安裝及配置程序中另有指示，否則在開啟裝置機蓋之前，請拔掉連接的電源線、電信系統、網路及數據機。
- 安裝、移動或開啟本產品或附屬裝置的機蓋時，請遵循下列說明連接及拔掉纜線。

連線	切斷連線
1. 關閉所有開關。	1. 關閉所有開關。
2. 首先，連接所有接線到裝置。	2. 首先，拔掉插座上的電源線。
3. 連接信號線到接頭。	3. 拔掉接頭上的信號線。
4. 連接電源線到插座。	4. 拔掉裝置上所有接線。
5. 開啟裝置。	



警告：
如果您的系統中含有鋰電池模組，請僅使用同一家製造商所生產的相同模組進行更換。
如果未以正確方式使用、處理或棄置含鋰的電池，會有爆炸的危險。
請勿：

- 沾溼或浸入水中
- 置於 **100°C (212°F)** 以上的高溫環境
- 修理或拆開

請按照各地區有關廢棄電池的法令和規定處理舊電池。



警告：
- 請勿移除機蓋。移除雷射產品的機蓋，可能會導致暴露在危險的雷射輻射中。裝置內部並無可自行維修的零件。
- 利用或執行非本文中所指定的控制、調整及執行程序，可能會導致危險的輻射外洩。



危險

部分雷射產品含有內嵌式 **Class 3A** 或 **Class 3B** 雷射二極體。請注意下列事項：
在開啟光碟機時，會發生雷射輻射。請勿直視光束或用光學儀器直接檢視，並避免直接暴露在光束中。





≥ 18 公斤（37 磅） ≥ 32 公斤（70.5 磅） ≥ 55 公斤（121.2 磅）

警告：
搬運時請注意安全。



警告：
裝置上的電源控制按鈕及電源供應器上的電源開關，無法關閉裝置所產生的電流。
該裝置可能有多條電源線。若要除去裝置流出的所有電流，請確認已切斷所有電源線的電源。

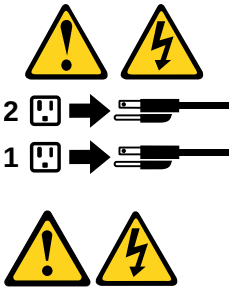

DANGER

Le courant électrique provenant de l'alimentation, du téléphone et des câbles de transmission peut présenter un danger.

Pour éviter tout risque de choc électrique :

- Ne manipulez aucun câble et n'effectuez aucune opération d'installation, d'entretien ou de reconfiguration de ce produit au cours d'un orage.
- Branchez tous les cordons d'alimentation sur un socle de prise de courant correctement câblé et mis à la terre.
- Branchez sur des socles de prise de courant correctement câblés tout équipement connecté à ce produit.
- Lorsque cela est possible, n'utilisez qu'une seule main pour connecter ou déconnecter les câbles d'interface.
- Ne mettez jamais un équipement sous tension en cas d'incendie ou d'inondation, ou en présence de dommages matériels.
- Avant de retirer les carters de l'unité, mettez celle-ci hors tension et déconnectez ses cordons d'alimentation, ainsi que les câbles qui la relient aux réseaux, aux systèmes de télécommunication et aux modems (sauf instruction contraire mentionnée dans les procédures d'installation et de configuration).
- Lorsque vous installez, que vous déplacez, ou que vous manipulez le présent produit ou des périphériques qui lui sont raccordés, reportez-vous aux instructions ci-dessous pour connecter et déconnecter les différents cordons.

Connexion	Déconnexion
1. Mettez les unités HORS TENSION. 2. Commencez par brancher tous les cordons sur les unités. 3. Branchez les câbles d'interface sur des connecteurs. 4. Branchez les cordons d'alimentation sur des prises. 5. Mettez les unités SOUS TENSION.	1. Mettez les unités HORS TENSION. 2. Débranchez les cordons d'alimentation des prises. 3. Débranchez les câbles d'interface des connecteurs. 4. Débranchez tous les câbles des unités.



ATTENTION:

Si votre système est doté d'un module contenant une pile au lithium, vous devez le remplacer uniquement par un module identique, produit par le même fabricant. La pile contient du lithium et peut exploser en cas de mauvaise utilisation, de mauvaise manipulation ou de mise au rebut inappropriée.

Ne pas :

- **la jeter à l'eau,**
- **l'exposer à des températures supérieures à 100°C,**
- **chercher à la réparer ou à la démonter.**

Ne pas mettre la pile à la poubelle. Pour la mise au rebut, se reporter à la réglementation en vigueur.



ATTENTION:

Si des produits à laser (tels que des unités de CD-ROM, de DVD-ROM, des unités à fibres optiques, ou des émetteurs) sont installés, prenez connaissance des informations suivantes :

- **Ne retirez pas le carter. En ouvrant l'unité de CD-ROM ou de DVD-ROM, vous vous exposez au rayonnement dangereux du laser. Aucune pièce de l'unité n'est réparable.**
- **Pour éviter tout risque d'exposition au rayon laser, respectez les consignes de réglage et d'utilisation des commandes, ainsi que les procédures décrites dans le présent manuel.**



DANGER

Certains produits à laser contiennent une diode à laser intégrée de classe 3A ou 3B. Prenez connaissance des informations suivantes:

Rayonnement laser lorsque le carter est ouvert. Evitez toute expositiondirecte au rayon laser. Evitez de regarder fixement le faisceau ou del'observer à l'aide d'instruments optiques.



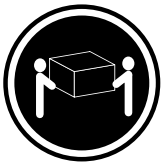

≥18 kg (37 lb)



≥32 kg (70.5 lb)



≥55 kg (121.2 lb)

ATTENTION:

Soulevez la machine avec précaution.



ATTENTION:

L'interrupteur de contrôle d'alimentation de l'unité et l'interrupteur dubloc d'alimentation ne coupent pas le courant électrique alimentantl'unité. En outre, le système peut être équipé de plusieurs cordonsd'alimentation. Pour mettre l'unité hors tension, vous devez déconnectertous les cordons de la source d'alimentation.

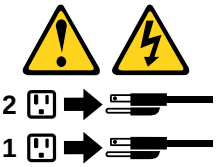



VORSICHT

An Netz-, Telefon- und Datenleitungen können gefährliche Spannungen anliegen.

Aus Sicherheitsgründen:

- **Bei Gewitter an diesem Gerät keine Kabel anschließen oder lösen. Ferner keine Installations-, Wartungs- oder Rekonfigurationsarbeiten durchführen.**
- **Gerät nur an eine Schutzkontaktsteckdose mit ordnungsgemäß geerdetem Schutzkontakt anschließen.**
- **Alle angeschlossenen Geräte ebenfalls an Schutzkontaktsteckdosen mit ordnungsgemäß geerdetem Schutzkontakt anschließen.**
- **Die Signalkabel nach Möglichkeit einhändig anschließen oder lösen, um einen Stromschlag durch Berühren von Oberflächen mit unterschiedlichem elektrischem Potenzial zu vermeiden.**

- **Geräte niemals einschalten, wenn Hinweise auf Feuer, Wasser oder Gebäudeschäden vorliegen.**
- **Die Verbindung zu den angeschlossenen Netzkabeln, Telekommunikationssystemen, Netzwerken und Modems ist vor dem Öffnen des Gehäuses zu unterbrechen, sofern in den Installations- und Konfigurationsprozeduren keine anders lautenden Anweisungen enthalten sind.**
- **Zum Installieren, Transportieren und Öffnen der Abdeckungen des Computers oder der angeschlossenen Einheiten die Kabel gemäß der folgenden Tabelle anschließen und abziehen.**

Zum Anschließen der Kabel gehen Sie wie folgt vor	Zum Abziehen der Kabel gehen Sie wie folgt vor
1. Schalten Sie alle Einheiten AUS. 2. Schließen Sie erst alle Kabel an die Einheiten an. 3. Schließen Sie die Signalkabel an die Buchsen an. 4. Schließen Sie die Netzkabel an die Steckdose an. 5. Schalten Sie die Einheit EIN.	1. Schalten Sie alle Einheiten AUS. 2. Ziehen Sie zuerst alle Netzkabel aus den Netzsteckdosen. 3. Ziehen Sie die Signalkabel aus den Buchsen. 4. Ziehen Sie alle Kabel von den Einheiten ab.



CAUTION:

Enthält das System ein Modul mit einer Lithiumbatterie, dieses nur durch ein Modul desselben Typs und von demselben Hersteller ersetzen. Die Batterie enthält Lithium und kann bei unsachgemäßer Verwendung, Handhabung oder Entsorgung explodieren.

Die Batterie nicht:

- mit Wasser in Berührung bringen.
- über 100 C erhitzen.
- reparieren oder zerlegen.

Die örtlichen Bestimmungen für die Entsorgung von Sondermüll beachten.



ACHTUNG:

Bei der Installation von Lasergeräten (wie CD-ROM-Laufwerken, DVD- aufwerken, Einheiten mit Lichtwellenleitertechnik oder Sendern) Folgendes beachten:

- **Die Abdeckungen nicht entfernen. Durch Entfernen der Abdeckungen des Lasergeräts können gefährliche Laserstrahlungen freigesetzt werden. Das Gerät enthält keine zu wartenden Teile.**
- **Werden Steuerelemente, Einstellungen oder Durchführungen von Prozeduren anders als hier angegeben verwendet, kann gefährliche Laserstrahlung auftreten.**



VORSICHT

Einige Lasergeräte enthalten eine Laserdiode der Klasse 3A oder 3B. Beachten Sie Folgendes:

Laserstrahlung bei geöffneter Verkleidung. Nicht in den Strahl blicken. Keine Lupen oder Spiegel verwenden. Strahlungsbereich meiden.





≥18 kg ≥32 kg ≥55 kg

ACHTUNG:

Arbeitsschutzrichtlinien beim Anheben der Maschine beachten.



ACHTUNG:

Mit dem Netzschalter an der Einheit und am Netzteil wird die Stromversorgung für die Einheit nicht unterbrochen. Die Einheit kann auch mit mehreren Netzkabeln ausgestattet sein. Um die Stromversorgung für die Einheit vollständig zu unterbrechen, müssen alle zum Gerät führenden Netzkabel vom Netz getrennt werden.

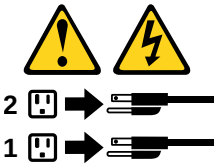



סכנה

זרם חשמלי המועבר בכבלי חשמל, טלפון ותקשורת הוא מסוכן.

כדי להימנע מסכנת התחשמלות:

- אל תחברו או תנתקו כבלים, ואל תבצעו פעולת התקנה, תחזוקה או שינוי תצורה במוצר זה במהלך סופת ברקים.
- חברו את כל כבלי החשמל לשקע חשמל מחווט ומוארק כהלכה.
- חברו כל ציוד שיחובר למוצר זה לשקעי חשמל מחווטים כהלכה.
- במידת האפשר, השתמשו ביד אחת בלבד לחיבור או לניתוק של כבלי אותות.
- לעולם אל תפעילו ציוד כלשהו כאשר יש עדות לנזק מבני או לנזק כתוצאה מאש או ממים.
- נתקו את כבלי החשמל, מערכות התקשורת, התקני הרשת והמודמים המחוברים לפני פתיחת כיסויי ההתקן, אלא אם הליכי ההתקנה וקביעת התצורה מורים אחרת.
- בעת התקנה, העברה או פתיחת כיסויים במוצר זה או בהתקנים המחוברים, חברו ונתקו את הכבלים כמתואר בטבלה שלהלן.

כדי לחבר	כדי לנתק
1. כבו הכל.	1. כבו הכל.
2. ראשית, חברו את כל הכבלים להתקנים.	2. ראשית, נתקו את כבלי החשמל מהשקעים.
3. חברו את כבלי האותות למחברים.	3. נתקו את כבלי האותות מהמחברים.
4. חברו את כבלי החשמל לשקעים.	4. הסירו את כל הכבלים מההתקנים.
5. הפעילו את ההתקן.	



זהירות:
אם המערכת כוללת מודול המכיל סוללת ליתיום, החליפו אותו רק במודול מאותו סוג ומתוצרת אותו יצרן. הסוללה מכילה ליתיום, ועלולה להתפוצץ אם לא משתמשים ומטפלים בה או משליכים אותה כיאות.

לעולם:

- אל תטבלו במים
- אל תחממו לטמפרטורה הגבוהה מ-100°C (212°F)
- אל תתקנו או תפרקו

השליכו את הסוללה כנדרש לפי התקנות והחוקים המקומיים.



זהירות:
בעת התקנת מוצרי לייזר (כגון כונני תקליטורים ו-DVD, התקני סיב אופטי או משדרים), שימו לב לאזהרות הבאות:

- אל תסירו את הכיסויים. הסרת הכיסויים של מוצר הלייזר עלולה לגרום לחשיפה לקרינת לייזר מסוכנת. אין חלקים ברי טיפול בתוך ההתקן.
- שינויים, שימוש בבקרות או ביצוע הליכים אחרים מאלה המתוארים כאן, עלולים לגרום לחשיפה לקרינה מסוכנת.



סכנה

מוצרי לייזר מסוימים מכילים דיודת לייזר מסוג Class 3A או Class 3B. שימו לב לאזהרה הבאה:

כאשר הוא פתוח, המוצר פולט קרינת לייזר. אל תביטו ישירות בקרן, אל תביטו ישירות בעזרת ציוד אופטי, והימענו מחשיפה לקרן.



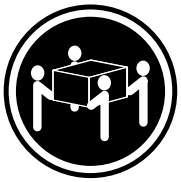

≥ 55 ק"ג (121.2 ליב')



≥ 32 ק"ג (70.5 ליב')

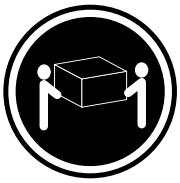

≥ 18 ק"ג (37 ליב')

זהירות:
השתמשו בהליכים
הנאותים בעת
הרמת הציוד.





זהירות:
לחצן ההפעלה של ההתקן ומתג ההפעלה של ספק החשמל אינם מפסיקים את זרם החשמל המסופק להתקן. בנוסף, ההתקן עשוי לכלול יותר מכבל חשמל אחד. כדי לסלק את כל הזרם החשמלי מההתקן, ודאו שכל כבלי החשמל מנותקים ממקור החשמל.

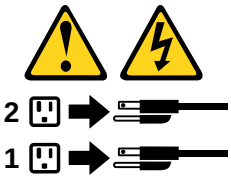



PERICOLO

La corrente elettrica proveniente dai cavi di alimentazione, del telefono e di comunicazione può essere pericolosa.

Per evitare il rischio di scosse elettriche:

- **Non collegare o scollegare qualsiasi cavo oppure effettuare l'installazione, la manutenzione o la riconfigurazione del prodotto durante un temporale.**
- **Collegare tutti i fili elettrici a una presa di alimentazione correttamente cablata e dotata di messa a terra.**
- **Collegare alle prese elettriche appropriate tutte le apparecchiature che verranno utilizzate per questo prodotto.**
- **Se possibile, utilizzare solo una mano per collegare o scollegare i cavi di segnale.**
- **Non accendere assolutamente apparecchiature in presenza di incendi, perdite d'acqua o danno strutturale.**
- **Scollegare i cavi di alimentazione, i sistemi di telecomunicazione, le reti e il modem prima di aprire i coperchi del dispositivo, salvo istruzioni contrarie relative alle procedure di installazione e configurazione.**
- **Collegare e scollegare i cavi come descritto nella seguente tabella quando vengono effettuate operazioni di installazione, spostamento o apertura dei coperchi di questo prodotto o delle unità collegate.**

Per collegarsi	Per scollegarsi
1. SPEGNERE le apparecchiature. 2. Innanzitutto, collegare tutti i cavi alle unità. 3. Collegare i cavi di segnale ai connettori. 4. Collegare i cavi di alimentazione alla presa. 5. Accendere l'unità.	1. SPEGNERE le apparecchiature. 2. Innanzitutto, rimuovere i cavi di alimentazione dalla presa. 3. Rimuovere i cavi di segnale dai connettori. 4. Rimuovere tutti i cavi dalle unità.



ATTENZIONE:

Se sul sistema è presente un modulo che contiene una batteria al litio, sostituirlo solo con un tipo di modulo dello stesso tipo della stessa casa di produzione. La batteria contiene litio e può esplodere se usata, maneggiata o smaltita in modo non corretto.

Non:

- **Gettare o immergere la batteria nell'acqua**
- **Riscaldarla ad una temperatura superiore ai 100 gradi C (212 gradi F)**
- **Smontarla, ricaricarla o tentare di ripararla**

Le batterie usate vanno smaltite in accordo alla normativa in vigore (DPR 915/82 e successive disposizioni e disposizioni locali).



ATTENZIONE:

Quando vengono installati prodotti laser (quali CD-ROM, unità DVD-ROM, unità a fibre ottiche o trasmittenti), tener presente quanto segue:

- **Non rimuovere gli sportelli. L'apertura di un'unità laser può determinare l'esposizione a radiazioni laser pericolose. All'interno dell'unità non vi sono parti su cui effettuare l'assistenza tecnica.**
- **L'utilizzo di controlli, regolazioni o l'esecuzione di procedure non descritti nel presente manuale possono provocare l'esposizione a radiazioni pericolose.**



PERICOLO

Alcune unità laser contengono un diodo laser di Classe 3A o Classe 3B. Tener presente quanto segue:

Aprendo l'unità vengono emesse radiazioni laser. Non fissare il fascio, non guardarlo direttamente con strumenti ottici ed evitare l'esposizione al fascio.





≥18 kg ≥32 kg ≥55 kg

ATTENZIONE:

Prestare attenzione nel sollevare l'apparecchiatura.



ATTENZIONE:

Il pulsante di controllo dell'alimentazione presente sull'unità e l'interruttore dell'alimentatore non disattivano l'alimentazione corrente fornita all'unità. E' possibile che l'unità disponga di più cavi di alimentazione. Per disattivare l'alimentazione dall'unità, accertarsi che tutti i cavi di alimentazione siano scollegati dalla fonte di alimentazione.

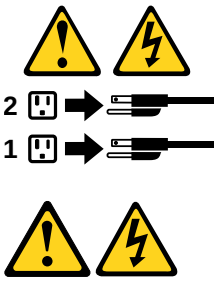

위험

전원, 전화, 통신 케이블의 전류는 위험합니다.

감전의 위험을 피하려면 다음과 같이 하십시오.

- 번개가 치는 날에는 케이블을 연결 또는 분리하거나 본 제품을 설치, 보수, 재구성하지 마십시오.

- 모든 전원 코드는 올바르게 접지된 전기 콘센트에 연결하십시오.

- 본 제품에 연결될 장치는 올바르게 배선된 콘센트에 연결하십시오.

- 신호 케이블을 연결 또는 분리할 때 가능하면 한 손만을 사용하십시오.

- 불 또는 물로 인한 손상이나 구조적인 손상이 있을 경우 장치의 전원을 절대 켜지 마십시오.

- 설치 및 구성 과정에 별도의 지시 사항이 없는 경우, 장치의 덮개를 열기 전에 연결된 전원 코드, 원격 통신 시스템, 네트워크, 모뎀을 분리하십시오.

- 본 제품이나 연결된 장치를 설치, 이동하거나 덮개를 열 때 다음 표와 같은 순서로 케이블을 연결하거나 분리하십시오.

연결할 때:	분리할 때:
1. 모든 장치의 전원을 끄십시오. 2. 먼저 모든 케이블을 장치에 연결하십시오. 3. 커넥터에 신호 케이블을 연결하십시오. 4. 콘센트에 전원 코드를 연결하십시오. 5. 장치의 전원을 켜십시오.	1. 모든 장치의 전원을 끄십시오. 2. 먼저 콘센트에서 전원 코드를 분리하십시오. 3. 커넥터에서 신호 케이블을 분리하십시오. 4. 장치에서 모든 케이블을 분리하십시오.



주의:
사용자의 시스템이 리튬 배터리를 포함하는 모듈일 경우, 동일한 제조업체에서 동일한 모듈 유형으로 생산된 제품으로 교체하십시오. 배터리에는 리튬이 함유되어 있어 잘못 사용, 취급 또는 폐기할 경우 폭발의 위험이 있습니다.

사고를 방지하려면 다음 사항을 준수하십시오.

- 배터리를 물 속에 던지거나 침수시키지 마십시오.

- 100℃(212°F) 이상 가열하지 마십시오.

- 수리하거나 분해하지 마십시오.

배터리를 폐기할 때는 법령 또는 회사의 안전 수칙에 따라 폐기하십시오.



주의:
CD-ROM, DVD-ROM 장치, 광섬유 장치 또는 송신 장치와 같은 레이저 제품을 설치할 때, 다음과 같은 취급 주의사항을 참고하십시오.

- 덮개를 열지 마십시오. 덮개를 열면 레이저 복사 에너지에 노출될 위험이 있습니다. 장치 내부에는 사용자가 조정하거나 수리할 수 있는 부품이 없습니다.

- 규정된 것 이외의 절차 수행, 제어 조정 등의 행위로 인해 해로운 레이저 복사에 노출될 수 있습니다.



위험

일부 장비에는 임베디드 클래스 3A 또는 클래스 3B 레이저 다이오드가 있습니다. 다음 주의사항에 유의하십시오.

드라이브가 열리면 레이저 복사 에너지가 방출됩니다. 광선이 눈에 직접 쏘이지 않도록 하십시오. 나안 또는 광학 기구를 착용한 상태에서 광선을 직접 바라보지 않도록 하십시오.



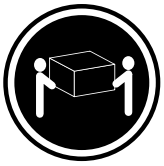

≥18 kg (37 lbs)



≥32 kg (70.5 lbs)



≥55 kg (121.2 lbs)

주의:
제품을 들어 올릴 때
안전 규제를 따르십시오.



주의:
장치의 전원 제어 버튼 및 전원 공급 장치의 전원 스위치를 사용하여 장치에 공급되는 전기를 차단하지 마십시오. 장치는 둘 이상의 코드를 가지고 있을 수 있습니다. 장치에서 모든 전원을 차단하려면 콘센트에서 코드가 모두 분리되어 있는지 확인하십시오.

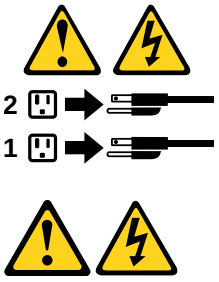

PELIGRO

La corriente eléctrica procedente de cables de alimentación, teléfonos y cables de comunicación puede ser peligrosa.

Para evitar el riesgo de descarga eléctrica:

- **No conecte ni desconecte los cables ni realice ninguna tarea de instalación, mantenimiento o reconfiguración de este producto durante una tormenta eléctrica.**
- **Conecte todos los cables de alimentación a tomas de corriente debidamente cableadas y conectadas a tierra.**
- **Cualquier equipo que se conecte a este producto también debe conectarse a tomas de corriente debidamente cableadas.**

- **Siempre que sea posible, utilice una sola mano para conectar o desconectar los cables de señal.**
- **No encienda nunca un equipo cuando hay señales de fuego, agua o daños estructurales.**
- **Desconecte los cables de alimentación, los sistemas de telecomunicaciones, las redes y los módems conectados antes de abrir las cubiertas de los dispositivos, a menos que se indique lo contrario en los procedimientos de instalación y configuración.**
- **Conecte y desconecte los cables, como se describe en la tabla siguiente, cuando instale, mueva o abra las cubiertas de este producto o de los dispositivos conectados.**

Para conectar	Para desconectar
1. APÁGUELO todo. 2. En primer lugar, conecte todos los cables a los dispositivos. 3. Conecte los cables de señal a los conectores. 4. Enchufe los cables de alimentación a las tomas de corriente. 5. Encienda el dispositivo.	1. APÁGUELO todo. 2. En primer lugar, desenchufe los cables de alimentación de las tomas de corriente. 3. Desconecte los cables de señal de los conectores. 4. Desconecte todos los cables de los dispositivos.



PRECAUCIÓN:

Si su sistema dispone de un módulo que contiene una batería de litio, reemplácelo sólo con el mismo tipo de módulo, del mismo fabricante. La batería contiene litio y puede explotar si no se utiliza, manipula o desecha correctamente.

No debe:

- **Arrojarla al agua o sumergirla en ella**
- **Exponerla a temperaturas superiores a 100°C (212°F)**
- **Repararla o desmontarla**

Deshágase de la batería según especifiquen las leyes o normas locales.



PRECAUCIÓN:

Cuando haya productos láser (como unidades de CD-ROM, unidades de DVD, dispositivos de fibra óptica o transmisores) instalados, tenga en cuenta lo siguiente:

- **No quite las cubiertas. Si quita las cubiertas del producto láser, podría quedar expuesto a radiación láser peligrosa. Dentro del dispositivo no existe ninguna pieza que requiera servicio técnico.**
- **Si usa controles o ajustes o realiza procedimientos que no sean los especificados aquí, podría exponerse a radiaciones peligrosas.**



PELIGRO

Algunos productos láser tienen incorporado un diodo láser de clase 3A o clase 3B. Tenga en cuenta lo siguiente:

Cuando se abre, queda expuesto a radiación láser. No mire directamente al rayo láser, ni siquiera con instrumentos ópticos, y evite exponerse directamente al rayo láser.





≥18 kg



≥32 kg



≥55 kg

PRECAUCIÓN:

Adopte procedimientos seguros al levantar el equipo.



PRECAUCIÓN:

El botón de control de alimentación del dispositivo y el interruptor de alimentación de la fuente de alimentación no desconectan la corriente eléctrica suministrada al dispositivo. Además, el dispositivo podría tener más de un cable de alimentación. Para suprimir toda la corriente eléctrica del dispositivo, asegúrese de que todos los cables de alimentación estén desconectados de la toma de corriente.

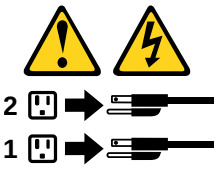

Chapter 2. Important service information

Strategy for replacing FRUs

Before replacing parts:

Ensure that all software fixes, drivers, and UEFI BIOS downloads are installed before you replace any FRUs listed in this manual.

After a system board is replaced, ensure that the latest UEFI BIOS is loaded to the system board before you complete the service action.

To download and install software fixes, drivers, and UEFI BIOS, go to https://pcsupport.lenovo.com and follow the instructions on the screen.

Use the following strategy to prevent unnecessary expense for replacing and servicing FRUs:

- If you are instructed to replace a FRU but the replacement does not correct the problem, reinstall the original FRU before you continue.
- Some computers have both a processor board and a system board. If you are instructed to replace either the processor board or the system board, and replacing one of them does not correct the problem, reinstall that board, and then replace the other one.
- If an adapter or a device consists of more than one FRU, any of the FRUs might be the cause of the error. Before replacing the adapter or device, remove the FRUs, one by one, to see if the symptoms change. Replace only the FRU that changed the symptoms.

Strategy for replacing a hard disk drive or a solid-state drive

Always try to run a low-level format operation before replacing a hard disk drive or a solid-state drive. This will cause all customer data on the drive to be lost. Ensure that the customer has a current backup of the data before you perform this task.

Attention: The drive startup sequence in the computer you are servicing might have been changed. Be extremely careful during write operations such as copying, saving, or formatting. If you select an incorrect drive, data or programs can be overwritten.

Important notice for replacing a system board

Some components mounted on a system board are very sensitive. Improper handling of a system board can cause damage to those components, and may cause a system malfunction.

After replacing the system board, the recommended option is to download the latest UEFI BIOS package from Lenovo Support Web site to bind the model type, serial number, and Brand ID of the computer with the new system board. Or use Golden Key U1 tool to bind the new system board. Refer to https://support.lenovo.com/solutions/ht102004 for instructions.

Attention: When handling a system board:

- Do not drop a system board or apply any excessive force to it.
- Avoid rough handling of any kind.
- Avoid bending a system board and hard pushing to prevent cracking at each Ball Grid Array (BGA) chipset.

© Copyright Lenovo 2022, 2025

How to use error codes

Use the error codes displayed on the screen to diagnose failures. If more than one error code is displayed, begin the diagnosis with the first error code. Whatever causes the first error code might also cause false error codes. If no error code is displayed, see whether the error symptom is listed in the “Symptom-to-FRU Index” section.

Strategy for replacing FRUs for CTO, special-bid, and standard models

This topic provides information about the model types and FRU identification.

Product definition

This topic introduces different model types and how to identify each type.

Dynamic Configure To Order (CTO) model

This model provides the ability for a customer to configure a Lenovo solution from a Web site, and have this configuration sent to fulfillment, where it is built and shipped directly to the customer. The machine label and eSupport will load these products as the 4-character MT, 4-character model, and 2-character country code. The model is “CTO1” and the default country code is “WW” (example: 20AACTO1WW).

Special-bid model

This model is a unique configuration that has been negotiated between Lenovo and the customer. A unique MTM consists of a 4-character MT, a 4-character model, and a numeric 2-character country code is provided to the customer to place orders (example: 20AA000955). The country code assigned is numeric and does not designate a specific country or region. The custom model factsheet for the MTM indicates which country the special-bid MTM is set up for. Special-bid offering is not generally announced.

Standard model

Standard models (fixed configuration) are announced and offered to all customers. The MTM portion of the machine label consists of a 4-character MT, a 4-character model, and an alphabetic 2-character country code. The country code assigned is alphabetic and represents a designated country or region (example: 20AA0009UK).

FRU identification

To identify FRUs for a product, do the following:

1. Go to: https://support.lenovo.com/partslookup
2. Type the Machine Type in the corresponding field to get a general FRU list, or type the Serial Number for more detailed FRU information.

Chapter 3. Product overview

Front

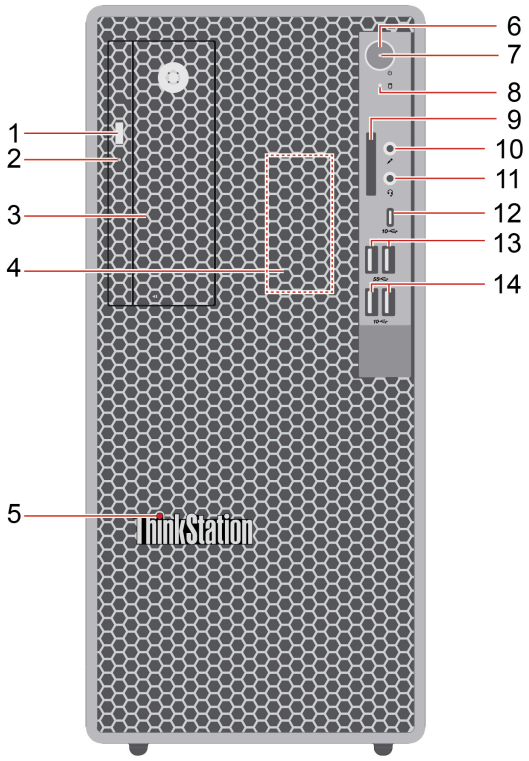

Item	Description	Item	Description
1	Optical drive eject button*	2	Optical drive activity indicator*
3	Flex bay	4	Internal speaker
5	ThinkStation® LED	6	Power button
7	Power indicator	8	Storage drive activity indicator
9	SD-card slot	10	Microphone connector
11	Headset connector	12	USB-C® (3.2 Gen 2) connector
13	USB 3.2 connectors Gen 1	14	USB 3.2 connectors Gen 2

* for selected models

© Copyright Lenovo 2022, 2025

Rear

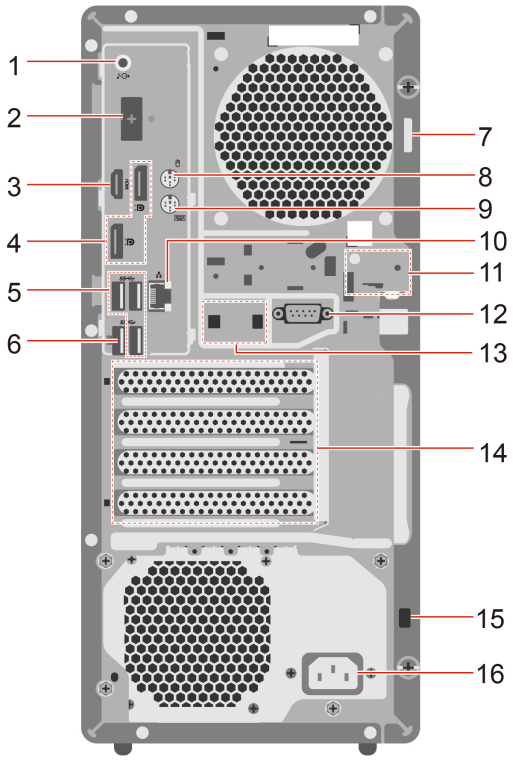

Item	Description	Item	Description
1	Audio line-out connector	2	Optional connector*
3	HDMI™ out connector	4	DisplayPort™ out connectors
5	USB 3.2 connectors Gen 1	6	USB 3.2 connector Gen 1 (with smart power-on feature)
7	Padlock loop	8	PS/2 mouse connector*
9	PS/2 keyboard connector*	10	Ethernet connector
11	E-lock slots	12	Serial connector*
13	Smart cable clip slots	14	PCI-Express card area
15	Security-lock slot	16	Power cord connector

* for selected models

Chapter 4. Service checkout and symptom-to-FRU index

This chapter provides information about general service checkout and symptom-to-FRU index.

Service checkout

Attention: The drives in the computer you are servicing might have been rearranged or the drive startup sequence changed. Be extremely careful during write operations such as copying, saving, or formatting. Data or programs can be overwritten if you select an incorrect drive.

General error messages appear if a problem or conflict is found by a program, the operating system, or both. For an explanation of these messages, refer to the information supplied with that software package.

Use the following procedure to help determine the cause of the problem:

1. Turn off the computer and all external devices.
2. Check all cables and power cords.
3. Set all display controls to the middle position.
4. Turn on all external devices.
5. Turn on the computer.
   - Look for displayed error codes.
   - Listen for beep codes.
   - Look for readable instructions or a main menu on the display.

   If you *did not* receive the correct response, proceed to step 6 on page 31.

   If you *do* receive the correct response, proceed to step 7 on page 31.
6. Look at the following conditions and follow the instructions:
   - If you hear beep codes during POST, go to “Beep symptoms” on page 33.
   - If the computer displays a POST error, go to “POST error codes” on page 34.
   - If the computer hangs and no error is displayed, continue at step 7 on page 31.
7. Run the Diagnostic programs. See Chapter 6 “Diagnostics” on page 40.
   - If you receive an error, replace the part that the diagnostic program calls out.
   - If the test stops and you cannot continue, replace the last device tested.

Problem determination tips

Due to the variety of hardware and software combinations that can be encountered, use the following information to assist you in problem determination. If possible, have this information available when requesting assistance from Service Support and Engineering functions.

- Machine type and model
- Processor or hard disk drive upgrades
- Failure symptom
  - Do diagnostics indicate a failure?
  - What, when, where, single, or multiple systems?
  - Is the failure repeatable?
  - Has this configuration ever worked?

© Copyright Lenovo 2022, 2025

  - If it has been working, what changes were made prior to its failing?
  - Is this the original reported failure?
- Diagnostics version
  - Type and version level
- Hardware configuration
  - Print (print screen) configuration currently in use
  - BIOS level
- Operating system software
  - Type and version level

Notes: To eliminate confusion, identical systems are considered identical only if they:

1. Are the exact machine type and models
2. Have the same BIOS level
3. Have the same adapters/attachments in the same locations
4. Have the same address jumpers/terminators/cabling
5. Have the same software versions and levels
6. Have the same Diagnostic Diskettes (version)
7. Have the same configuration options set in the system
8. Have the same setup for the operating system control files

Comparing the configuration and software set-up between “working and non-working” systems will often lead to problem resolution.

Symptom-to-FRU index

The Symptom-to-FRU index lists error symptoms and possible causes. The most likely cause is listed first. Always begin with “Service checkout” on page 31. This index can also be used to help you decide which FRUs to have available when servicing a computer. If you are unable to correct the problem using this index, go to “Undetermined problems” on page 36.

Notes:

- The Symptom-to-FRU index is not specific to any machine type and are applicable to all computers.
- If you have both an error message and an incorrect audio response, diagnose the error message first.
- If you cannot run the diagnostic tests or you get a diagnostic error code when running a test, but did receive a POST error message, diagnose the POST error message first.
- If you did not receive any error message, look for a description of your error symptoms in the first part of this index.

Hard disk drive boot error

A hard disk drive boot error can have the following causes.

Error	FRU/Action
The start-up drive is not in the boot sequence in configuration.	Check the configuration and ensure that the start-up drive is in the boot sequence.
No operating system installed on the boot drive.	Install an operating system on the boot drive.

Error	FRU/Action
The boot sector on the startup drive is corrupted.	The drive must be formatted. Do the following: 1. Attempt to back up the data on the failing hard disk drive. 2. Using the operating system programs, format the hard disk drive.
The drive is defective.	Replace the hard disk drive.

Power supply problems

If you suspect a power problem, use the following procedures.

Check/Verify	FRU/Action
Check the following for proper installation. • Power cord • On/Off switch connector • On/Off switch power supply connector • System board power supply connectors • CPU connection	Reseat connectors
Check the power cord for continuity.	Power cord
Check the power-on switch for continuity.	Power-on switch

Beep symptoms

Beep symptoms are tones or a series of tones separated by pauses (intervals without sound) during POST.

The following table describes the beep symptoms.

Beep symptom	FRU/Action
2 short beeps: common POST error	Common POST error code. See the detailed failure information in “POST error codes” on page 34.
3 short and 1 long beeps: DRAM memory error	Perform the following actions in order: 1. Make sure that the memory modules are properly seated in the memory slots. 2. Replace the memory modules. 3. Replace the system board.
2 long and 3 short beeps: graphics card error	Perform the following actions in order: 1. Make sure that the graphics cards are properly seated in the slots. 2. Replace the graphics cards. 3. Replace the system board.

POST error codes

Each time you turn on the system, it performs a series of tests that check the operation of the system and some options. This series of tests are called the *Power-On Self-Test*, or *POST*. POST checks the following operations:

- Some basic system-board operations
- Memory operation
- Video operation
- Whether the boot drive is working

If the POST detects a problem, an error message appears on the screen. A single problem might cause several error messages to appear. When you correct the cause of the first error message, the other error messages probably will not appear on the screen the next time.

Error code	POST error message	Description/Action
0135	CPU fan failure System fan failure Power fan failure Front fan failure Rear fan failure Auxiliary fan failure ODD fan failure	This error message is displayed when a fan fails and the system might be overheating. Press F1 to enter Setup, F2 to resume.
0162	Setup data integrity check failure	This error indicates the checksum of BIOS Setup data in NVRAM is bad. In BIOS Setup, the “Save Changes and Exit” operation is needed in order to clear this error.
0164	Memory configuration change has occurred	This error message is displayed when the memory size is changed. Press F1 to enter Setup, F2 to resume.
1762	Storage device configuration change has occurred	This error message is displayed when a hard disk drive change or an optical drive change has been made. In BIOS Setup, the “Save Changes and Exit” operation is needed in order to clear this error.

Miscellaneous error conditions

Message/Symptom	FRU/Action
Changing display colors	**Display/Monitor**
Computer will *not* power-off. See “Hard disk drive boot error” on page 32.	1. Power Switch 2. System Board 3. Riser card, if installed.

Message/Symptom	FRU/Action
Computer will *not* RPL from server	1. Ensure that the network is in startup sequence as the first device or the first device after diskette. 2. Ensure that the network adapter is enabled for RPL. 3. Network adapter (Advise network administrator of new MAC address)
Computer will *not* perform a Wake On LAN® (if applicable)	1. Check the power supply and signal cable connections to the network adapter. 2. Ensure that the operating system settings are set to enable Wake on LAN. 3. Ensure that the Wake On LAN feature is enabled in Setup/Configuration. 4. Ensure that the network administrator is using the correct MAC address. 5. Ensure no interrupt or I/O address conflicts. 6. Network adapter (advise network administrator of new MAC address)
Dead computer. See “Hard disk drive boot error” on page 32.	1. Power Supply 2. System Board
Diskette drive in-use light remains on or does not light when drive is active.	1. Diskette Drive 2. System Board 3. Diskette Drive Cable
Blank screen except for flashing cursor.	1. System Board 2. Primary Hard Disk Drive 3. Hard Disk Drive Cable
Incorrect memory size during POST	1. Run the Memory tests. 2. Memory Module 3. System Board
"Insert a Diskette" icon appears with a known-good diagnostics diskette in the first 3.5-inch diskette drive.	1. System Board 2. Diskette Drive Cable 3. Network Adapter
Intensity or color varies from left to right of characters and color bars	1. Display 2. Video adapter (if present) 3. System Board
No power or fan not running	1. See “Hard disk drive boot error” on page 32.
Non-system disk or disk error-type message with a known-good diagnostic diskette.	1. Diskette Drive 2. System Board 3. Diskette Drive Cable
Other display symptoms not listed above (including blank or illegible display)	1. Display 2. System Board

Message/Symptom	FRU/Action
Power-on indicator or hard disk drive in-use light not on, but computer works correctly	1. Power switch/LED assembly 2. System Board
Printer problems	1. Printer 2. System Board
Program loads from the hard disk with a known-good diagnostics diskette in the first 3.5-inch diskette drive	1. Run the Setup Utility program and check the Startup sequence. 2. Diskette Drive 3. Diskette Drive Cable 4. System Board 5. Power Supply
RPL computer cannot access programs from its own hard disk.	1. If the network administrator is using LCCM Hybrid RPL, check the startup sequence: a. **First device - network** b. **Second device - hard disk** 2. Hard disk drive
RPL computer does not RPL from server	1. Check the startup sequence. 2. Check the network adapter LED status.
Serial or parallel connector device failure (system board connector)	1. External Device Self-Test OK? 2. External Device 3. Cable 4. System Board
Serial or parallel connector device failure (adapter connector)	1. External Device Self-Test OK? 2. External Device 3. Cable 4. Alternate Adapter 5. System Board
Some or all keys on the keyboard do not work	1. Keyboard 2. Keyboard Cable 3. System Board

Undetermined problems

This section provides instructions on how to find out the failing devices or adapters.

1. Turn off the computer.
2. Remove or disconnect the following components (if installed) one at a time.
   a. External devices (modem, printer, or mouse)
   b. Any adapters
   c. Memory modules
   d. Extended video memory

e. External Cache
f. External Cache RAM
g. Hard disk drive
h. Diskette drive

3. Turn on the computer to retest the system.
4. Repeat steps 1 through 3 until you find the failing device or adapter.

If all devices and adapters have been removed, and the problem continues, replace the system board. See Chapter 7 “Hardware replacement” on page 43.

Chapter 5. RAID

What is RAID

Redundant Array of Independent Disks (RAID) is a technology that provides increased storage functions and reliability through redundancy. It also can improve data storage reliability and fault tolerance compared with single-drive storage systems. Data loss resulting from a drive failure can be prevented by reconstructing missing data from the remaining drives.

When a group of independent physical storage drives is set up to use RAID technology, they are in a RAID array. This array distributes data across multiple storage drives, but the array appears to the host computer as one single storage unit. Creating and using RAID arrays provides high performance, such as the expedited I/O performance, because several drives can be accessed simultaneously.

RAID Level

Your computer must have the minimum number of SATA storage drives installed for the supported level of RAID below:

- RAID 0: striped disk array
  - Consists of at least two SATA storage drives
  - Supported strip size: 4 KB, 8 KB, 16 KB, 32 KB, 64 KB, or 128 KB
  - Better performance without fault tolerance
- RAID 1: mirrored disk array
  - Consists of two SATA storage drives
  - Improved reading performance and 100% redundancy
- RAID 5: block-level striped disk array with distributed parity
  - Consists of at least three SATA storage drives
  - Supported strip size: 16 KB, 32 KB, 64 KB, or 128 KB
  - Better performance and fault tolerance
- RAID 10: striped and mirrored disk array
  - Consists of at least four SATA storage drives
  - Supported strip size: 4 KB, 8 KB, 16 KB, 32 KB, or 64 KB
  - Better performance without fault tolerance
  - Improved reading performance and 100% redundancy

Configure the system BIOS to enable RAID functionality

To enable RAID functionality:

1. Restart the computer. When the logo screen is displayed, press F1 or Fn+F1.
2. Select **Devices → ATA Drive Setup** and press Enter.
3. Select **Configure SATA as** and press Enter.
4. Select **RAID** and press Enter.
5. Press F10 or Fn+F10 to save the changes and exit.

© Copyright Lenovo 2022, 2025

Configure RAID in UEFI mode

This section provides instructions on how to configure RAID in UEFI mode.

Create RAID volumes in UEFI mode

Attention: All the existing data stored on the selected drives will be erased while the RAID volume is being created.

To create RAID volumes:

1. Restart the computer. When the logo screen is displayed, press F1 or Fn+F1.
2. Select **Devices → ATA Drive Setup** and press Enter.
3. Select **Intel (R) Rapid Storage Technology** and press Enter.
4. Select **Create RAID Volume** and press Enter.
5. Select **Name** and press Enter. When prompted, type a proper RAID Volume name in the field.
6. Select **RAID Level** and press Enter. When prompted, select a RAID level in the field.
7. Use the arrow keys and the space key to mark individual physical storage drives to be added in the RAID volume.
8. Select **Strip Size** and press Enter. When prompted, select a strip size in the field.
9. Select **Capacity** and type a volume size in the field.
10. Select **Create Volume** and press Enter to initiate volume creation.

Delete RAID volumes in UEFI mode

Attention: All the existing data stored on the selected drives will be erased after you delete RAID volumes.

To delete RAID volumes:

1. Restart the computer. When the logo screen is displayed, press F1 or Fn+F1.
2. Select **Devices → ATA Drive Setup** and press Enter.
3. Select **Intel (R) Rapid Storage Technology** and press Enter.
4. Select the RAID volume to be deleted and press Enter.
5. Select **Delete** and press Enter.
6. Select **Yes** to confirm the deletion of the selected RAID volume. Deleting a RAID volume will reset the storage drives to non-RAID.

Reset storage drives to non-RAID in UEFI mode

To reset your storage drives to non-RAID:

1. Restart the computer. When the logo screen is displayed, press F1 or Fn+F1.
2. Select **Devices → ATA Drive Setup** and press Enter.
3. Select **Intel (R) Rapid Storage Technology** and press Enter.
4. Select the RAID volumes and press Enter to view the detailed information. Select the storage drives you want to reset to non-RAID and then press Enter.
5. Select **Reset to Non-RAID** and press Enter.
6. Select **Yes** to reset the storage drives to non-RAID.

Chapter 6. Diagnostics

Use diagnostic solutions to test hardware components and report operating-system-controlled settings that interfere with the correct operation of your computer.

Basic procedure for resolving computer problems

Prerequisite

Before you start, read Chapter 1 “Important safety information” on page 1 and print the following instructions.

1. Check that:
   a. The cables for all connected devices are connected correctly and securely.
   b. All components have been reassembled correctly.
   c. All connected devices that require ac power are connected to properly grounded and working electrical outlets.
   d. All connected devices are enabled in UEFI BIOS.
2. Use an antivirus program to see if the computer has been infected by a virus. If the program detects a virus, remove the virus.
3. Go to “Self-help resources” on page 41 and follow the instructions for the type of problem you are experiencing.
4. Run the diagnostic program.
5. Recover your operating system. See “Self-help resources” on page 41.
6. If the problem persists, contact Lenovo.

UEFI diagnostic program

A UEFI diagnostic program is preinstalled on the computer. It enables you to test memory modules and internal storage devices, view system information, and check and recover bad sectors on internal storage devices.

To run the UEFI diagnostic program, do the following:

1. Turn on the computer. If the computer cannot be turned on, go to “Basic procedure for resolving computer problems” on page 40. If an error code is displayed, go to “Symptom-to-FRU index” on page 32 for error code descriptions and troubleshooting hints.
2. Repeatedly press and release the F10 key when turning on the computer. The main screen of the UEFI diagnostic program is displayed.
3. Follow the instructions on the screen to use the diagnostic program.

The options on the main screen are as follows:

© Copyright Lenovo 2022, 2025

Table 1. Options on the main screen of the UEFI diagnostic program

DIAGNOSTICS	TOOLS
• **CPU [U]** • **DISPLAY [D]** • **MEMORY [E]** • **MOTHERBOARD [H]** • **PCI EXPRESS [P]** • **STORAGE [S]** • **AUDIO [Z]** • **OPTICAL [O]** • **RUN ALL [R]**	• **SYSTEM INFORMATION [F1]** • **BAD BLOCK RECOVERY [F3]** • **SMART INFORMATION [F5]**

Note: The options on the main screen might vary, depending on the hardware configuration and the UEFI diagnostic program version preinstalled on the computer.

Lenovo diagnostic tools

For information about Lenovo diagnostic tools, go to:
https://pcsupport.lenovo.com/lenovodiagnosticsolutions

The Vantage app

The Vantage app is preinstalled on your computer. To diagnose problems with the Vantage app:

1. Type `Vantage` in the Windows search box and press Enter.
2. Follow the on-screen instructions and run a hardware scan.

If you are unable to isolate and resolve the problem after running the Vantage app, save and print the log files created by the program. You might need the log files when you speak to a Lenovo technical support representative.

Self-help resources

Use the following self-help resources to learn more about the computer and troubleshoot problems.

Resources	How to access?
Troubleshooting and frequently asked questions	• https://www.lenovo.com/tips • https://forums.lenovo.com
Accessibility information	https://www.lenovo.com/accessibility

Resources	How to access?
Reset or restore Windows	• Use Lenovo recovery options. 1. Go to https://support.lenovo.com/HowToCreateLenovoRecovery. 2. Follow the on-screen instructions. • Use Windows recovery options. 1. Go to https://pcsupport.lenovo.com. 2. Detect your computer or manually select your computer model. 3. Navigate to the troubleshooting menu to diagnose the operating system for recovery instructions.
Use the Vantage app to: • Configure device settings. • Download and install UEFI BIOS, drivers and firmware updates. • Secure you computer from outside threats. • Diagnose hardware problems. • Check the computer warranty status. • Access *User Guide* and helpful articles. **Note:** The available features vary depending on the computer model.	Type `Vantage` in the Windows search box.
Product documentation: • *Safety and Warranty Guide* • *Generic Safety and Compliance Notices* • *Setup Guide* • This *User Guide* • *Regulatory Notice*	Go to https://support.lenovo.com/documentation and search by product.
Lenovo Support Web site with the latest support information of the following: • Drivers and software • Diagnostic solutions • Product and service warranty • Product and parts details • Knowledge base and frequently asked questions	https://pcsupport.lenovo.com
Windows help information	• Type `Get Help` or `Tips` in the Windows search box. • Use Windows Search. • Microsoft support Web site: https://support.microsoft.com

Chapter 7. Hardware replacement

This chapter provides instructions on how to remove and install hardware for your computer.

Handling static-sensitive devices

Do not open the static-protective package containing the new part until the defective part has been removed and you are ready to install the new part. Static electricity, although harmless to you, can seriously damage computer components and options.

When you handle options and other computer components, take these precautions to avoid static-electricity damage:

- Limit your movement. Movement can cause static electricity to build up around you.
- Always handle options and other computer components carefully. Handle PCI/PCIe cards, memory modules, system boards, and CPUs by the edges. Never touch any exposed circuitry.
- Prevent others from touching the options and other computer components.
- Touch the static-protective package containing the part to a metal expansion-slot cover or other unpainted metal surface on the computer for at least two seconds. This reduces static electricity from the package and your body before you install or replace a new part.
- When possible, remove the new part from the static-protective package, and install it directly in the computer without setting the part down. When this is not possible, place the static-protective package on a smooth, level surface and place the part on the package.
- Do not place the part on the computer cover or other metal surface.

Service tool kit

Ensure that the following common service tool kit is prepared before you service the computer.

No.	Tool name	Specification	Product scope	Tool type
1	Screwdriver: Phillips Head 0	PH0	All	Common tool
2	Screwdriver: Phillips Head 00	PH00	All	Common tool
3	Screwdriver: Phillips Head 01	1	All	Common tool
4	Screwdriver: Phillips Head 01	1, Shank length greater than 6 inches	ThinkStation/DT	Common tool
5	Screwdriver: Phillips Head 02	2, Shank length greater than 6 inches	ThinkStation/SC/DT	Common tool
6	Screwdriver: Torx Head T5	T5	IdeaPad	Common tool

© Copyright Lenovo 2022, 2025

No.	Tool name	Specification	Product scope	Tool type
7	Screwdriver: Torx Head T15	T15, for Chassis outside	ThinkStation	Common tool
8	Screwdriver: Torx Head T20	T20, Shank length greater than 6 inches, for heatsink and CPU	ThinkStation	Common tool
9	Screwdriver: Torx Head T30	T30, Shank length greater than 6 inches, for heatsink and CPU	ThinkStation	Common tool
10	Pry tools 1	N/A	All	Common tool
11	Tweezers (conductive)	N/A	All	Common tool
12	Tweezers (isolated)	N/A	All	Common tool
13	Suction cup	N/A	All	Common tool
14	Hexagonal socket (for VGA)	H5 mm or 4.8 mm	ThinkCentre/Tiny	Common tool
15	Hexagonal socket (for Tiny antenna)	H8 mm	ThinkCentre/Tiny	Common tool
16	Adjustable Torque Screwdriver	0.2 Nm to 4.0 Nm, Threadripper CPU, CAMM, etc	All	Common tool
17	ESD Mat	ESD Mat	All	Common tool
18	USB Flash Drives	For Golden Key, Chrome Reloads, AutoPilot, etc	All	Common tool
19	USB-C to USB-A Converter	For USB-C only systems	All	Common tool
20	SSD/WWAN/IC Thermal pad	Thermal pads are typically used under the SSD/WWAN/IC in different thicknesses, the most common being 0.5 mm.	All	Consumable
21	Silicone grease for CPU or heatsink repairing	N/A	All	Consumable
22	Polyamide tape	N/A	All	Consumable

No.	Tool name	Specification	Product scope	Tool type
23	Mylar tape	N/A	All	Consumable
24	Eraser	N/A	All	Consumable
25	Electrical tape	N/A	All	Consumable
26	Double sided tape	N/A	All	Consumable
27	Conductive tape	N/A	All	Consumable
28	Cleaning pads/wipes	N/A	All	Consumable
29	Heat gun	N/A	All	Special Tool (Depot only)
30	Brown brush	25 mm to 35 mm wide	All	Special tool
31	Contact Cleaner Spray	WD-40 Contact Cleaner for battery connector	ThinkPad X1 Carbon	Special tool
32	Hexagonal socket	17 mm	Yoga AIO 7 27ACH6/ Yoga AIO 7 27ARH6	Special tool

Note: The silicone grease can be applied to the surfaces of the CPU and heat sink to eliminate air gaps. For parts with silicone grease applied, it is suggested that you apply new grease during the installation.

Major FRUs and CRUs

Your computer contains the following types of CRUs and FRUs:

- **Self-service CRUs:** Refer to parts that can be installed or replaced easily by customer themselves or by trained service technicians at an additional cost.
- **Optional-service CRUs:** Refer to parts that can be installed or replaced by customers with a greater skill level. Trained service technicians can also provide service to install or replace the parts under the type of warranty designated for the customer's machine.
- **FRUs:** Refer to parts that are more complicated to replace and it is recommended that these should be replaced by trained service technicians. If customers elect to replace the FRUs by themselves, we recommend that you ensure the correct instructions provided by Lenovo are carefully followed.

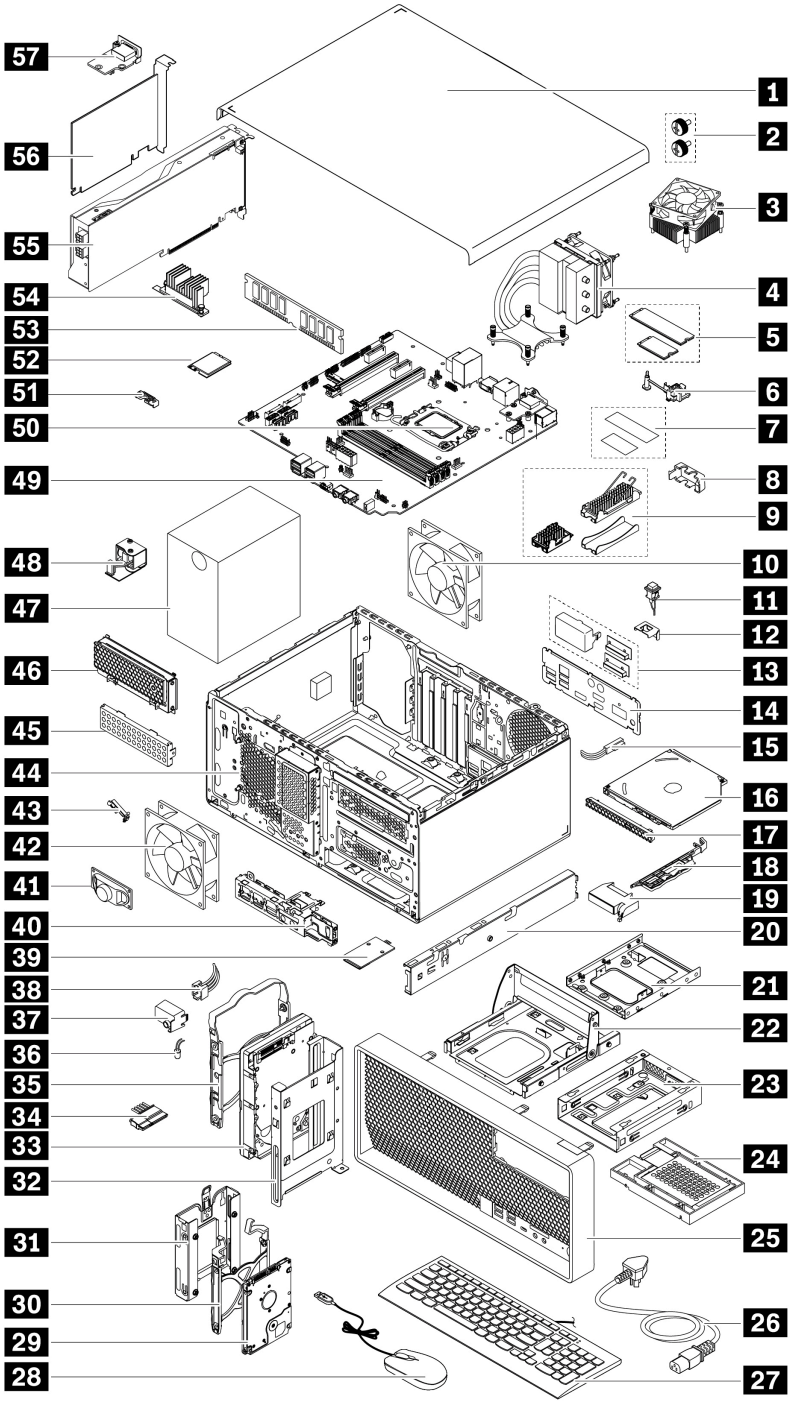

Number	Description	Self-service CRU	Optional-service CRU
1	Computer cover	Yes	No
2	Screws	No	No
3	65-watt heat sink and fan assembly*	No	Yes
4	125-watt heat sink and fan assembly*	No	Yes
5	M.2 solid-state drives*	Yes	No

Number	Description	Self-service CRU	Optional-service CRU
6	M.2 solid-state drive bracket*	Yes	No
7	Thermal pads*	No	No
8	Smart cable clip*	Yes	No
9	Heat sinks for M.2 solid-state drive*	Yes	No
10	Rear fan*	No	Yes
11	Cover presence switch cable	No	No
12	Cover presence switch bracket	No	No
13	Front and rear Wi-Fi antennas, and the cover for rear Wi-Fi antenna*	No	No
14	Rear I/O shield	No	No
15	Slim-optical-drive cable*	Yes	No
16	Slim optical drive*	Yes	No
17	Slim-optical-drive bezel*	Yes	No
18	Slim-optical-drive bracket*	Yes	No
19	Graphics card holder*	Yes	No
20	Chassis beam*	Yes	No
21	Type-1 storage drive converter*	Yes	No
22	Slim-optical-drive cage*	Yes	No
23	3.5-inch secondary storage drive cage*	Yes	No
24	Type-2 storage drive converter*	Yes	No
25	Front bezel	Yes	No
26	Power cord	Yes	No
27	Keyboard*	Yes	No
28	Mouse*	Yes	No
29	2.5-inch storage drive*	Yes	No
30	2.5-inch storage drive bracket*	Yes	No
31	2.5-inch srorage drive cage*	Yes	No
32	3.5-inch primary storage drive cage	Yes	No
33	3.5-inch storage drive*	Yes	No
34	Storage drive cable*	Yes	No
35	3.5-inch storage drive bracket*	Yes	No
36	ThinkStation LED cable	No	No
37	ThinkStation LED cover	No	No
38	Power button cable	No	No
39	Card reader*	No	No
40	Front I/O bracket	No	No

Number	Description	Self-service CRU	Optional-service CRU
41	Internal speaker	No	No
42	Front fan*	No	Yes
43	Thermal sensor	No	No
44	Chassis	No	No
45	EMI shielding*	No	Yes
46	Front-access storage enclosure door assembly*	No	No
47	Power supply assembly	No	Yes
48	E-lock*	No	Yes
49	System board	No	No
50	Microprocessor	No	No
51	Wi-Fi card shield*	No	No
52	Wi-Fi card*	No	No
53	Memory module	Yes	No
54	VRM heat sink	No	No
55	Graphics card*	No	Yes
56	PCI-Express card*	No	Yes
57	Flexible I/O board*	No	No

* for selected models

For detailed FRU and CRU information, such as the FRU part numbers and supported computer models, go to:
http://www.lenovo.com/serviceparts-lookup

System board

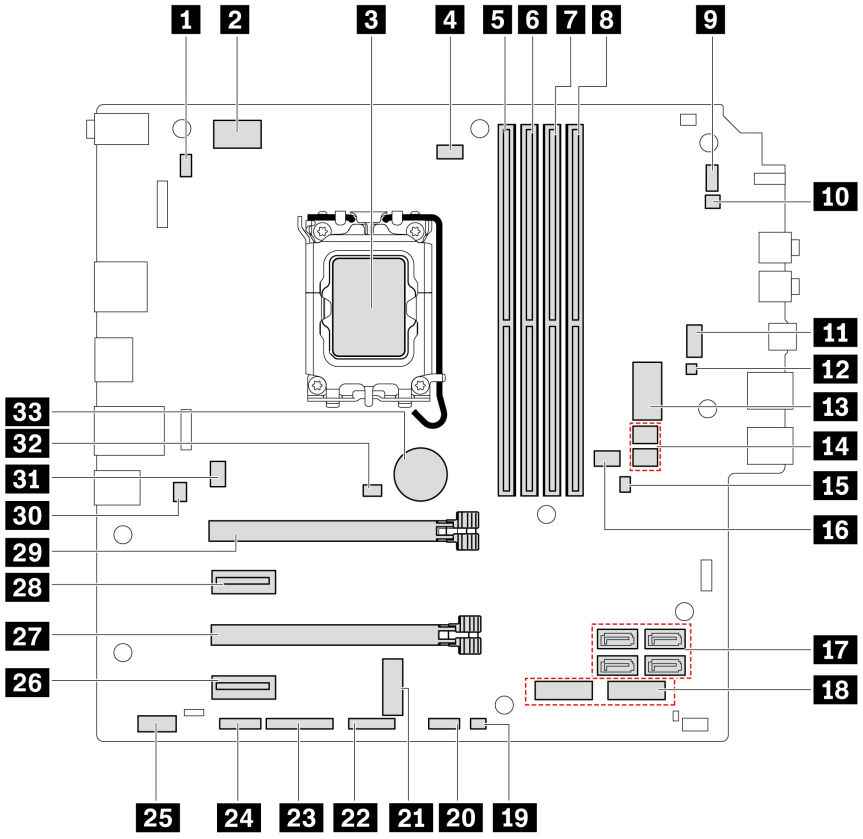

1 PS/2 keyboard and mouse connector	2 8-pin power connector
3 Microprocessor socket	4 Microprocessor fan connector
5 Memory slot (DIMM1)	6 Memory slot (DIMM2)
7 Memory slot (DIMM3)	8 Memory slot (DIMM4)
9 Power button connector	10 Internal speaker connector
11 Auxiliary fan connector 1	12 ThinkCentre LED connector
13 10-pin power connector	14 SATA power connectors
15 Clear CMOS (Complementary Metal Oxide Semiconductor)/Recovery jumper	16 Auxiliary fan connector 2
17 SATA connectors	18 M.2 solid-state drive slots
19 Thermal sensor connector	20 Front USB connector 2
21 M.2 Wi-Fi card slot	22 Front USB connector 1
23 Parallel connector	24 Serial (COM2) connector
25 Thunderbolt™ connector	26 PCI-Express x1 card slot
27 PCI-Express x16 Gen 4 card slot (link width x4)	28 PCI-Express x1 card slot
29 PCI-Express x16 Gen 4 graphics card slot	30 E-lock connector

31 System fan connector	32 Cover presence switch connector (intrusion switch connector)
33 Coin-cell battery	

Internal storage drives

Internal storage drives are devices that your computer uses to read and store data. You can add drives to your computer to increase storage capacity and enable your computer to read other types of media.

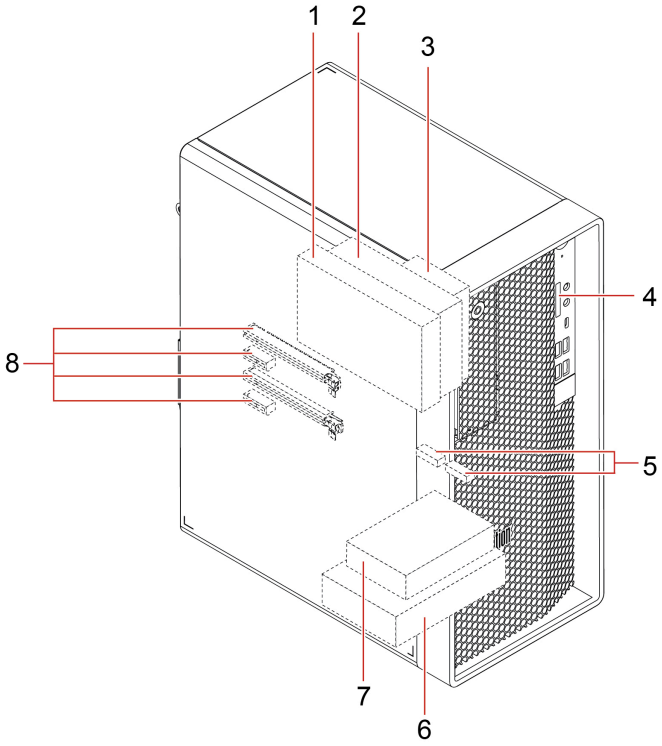

Item	Description	Function
1	Slim-optical-drive cage*	You can install a slim optical drive in this cage.
2	Flex bay	**Note:** The flex bay must be used together with the slim-optical-drive cage. You can install one of the following devices in the flex bay: • 3.5-inch secondary storage drive cage • 3.5-inch front-access storage enclosure In the 3.5-inch secondary storage drive cage or the 3.5-inch font-access storage enclosure, you can install the following storage drives: • 3.5-inch storage drive • 2.5-inch storage drive with a storage drive converter
3	2.5-inch secondary storage drive cage*	You can install a 2.5-inch storage drive in this cage when the flex bay is occupied.
4	SD-card slot	You can install a supported media card into the SD-card slot.
5	M.2 solid-state drive slots	Up to two M.2 solid-state drives are installed in selected models.

Item	Description	Function
6	3.5-inch primary storage drive cage	You can install the following storage drives in this cage: • 3.5-inch storage drive • 2.5-inch storage drive with a storage drive converter
7	2.5-inch primary storage drive cage*	You can install a 2.5-inch storage drive in this cage when the 3.5-inch primary storage drive cage is occupied.
8	PCIe slots	You can install compatible PCIe cards and PCIe solid-state drives in the PCIe card slots.

* for selected models

Removing and installing hardware

This section provides instructions on how to remove and install hardware for your computer.

Attention: Do not open your computer or attempt any repair before reading and understanding the Chapter 1 “Important safety information” on page 1.

External options

You can connect external options to your computer, such as external speakers, a printer, or a scanner. For some external options, you must install additional software in addition to making the physical connection. When installing an external option, see Chapter 3 “Product overview” on page 29 to identify the required connector. Then, use the instructions that come with the option to help you make the connection and install any required software or device drivers.

Computer cover

Prerequisite

Before you start, read *Generic Safety and Compliance Notices*, and print the following instructions.



Before you open the computer cover, turn off the computer and wait several minutes until the computer is cool.

For access, do the following:

1. Remove any media from the drives and turn off all connected devices and the computer.
2. Disconnect all power cords from electrical outlets and disconnect all cables from the computer.
3. Unlock any locking device that secures the computer cover.
4. Lay down the computer to place the computer cover facing up.

Removal steps

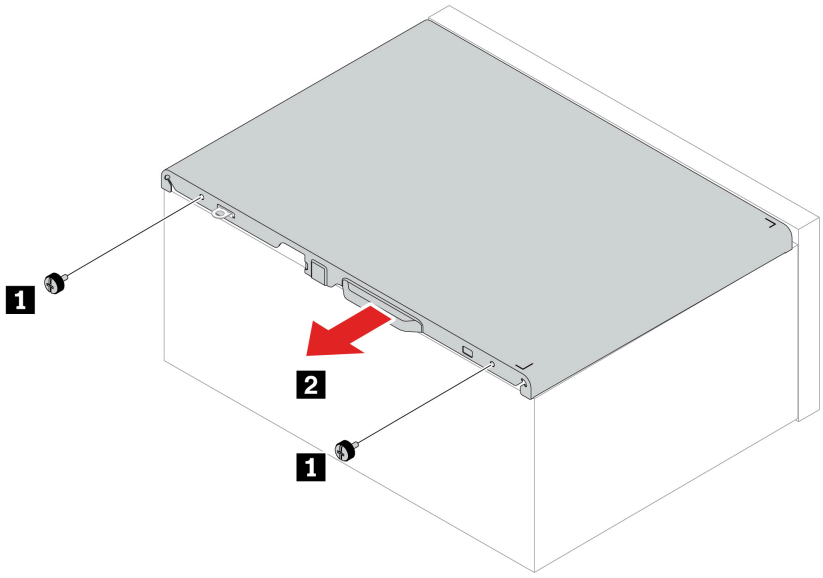

Note: If a locking device is available, use it to lock the computer after installing the computer cover.

Slim optical drive

Prerequisite

Before you start, read *Generic Safety and Compliance Notices*, and print the following instructions.

For access, do the following:

1. Remove the “Computer cover” on page 52.
2. Disconnect the signal and power cable from the slim optical drive.

Removal steps

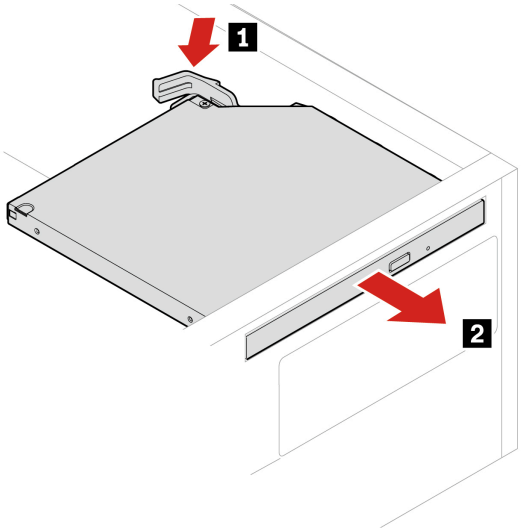

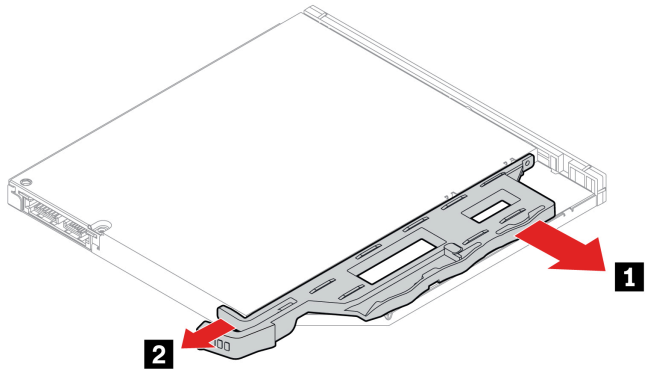

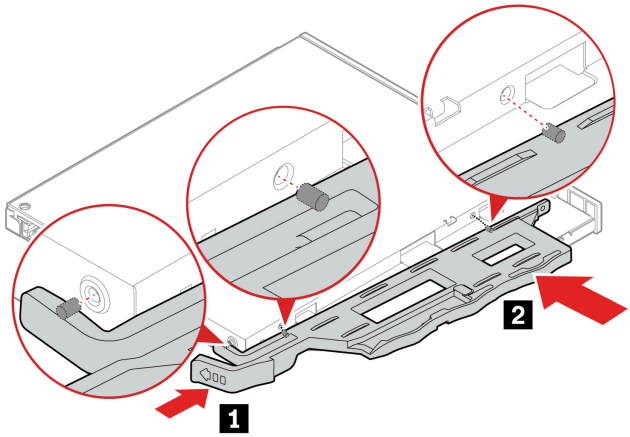

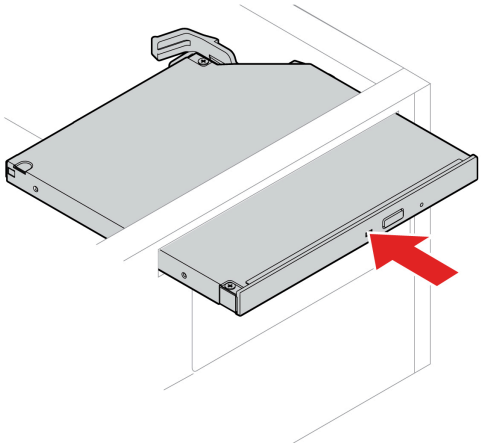

Front bezel

Prerequisite

Before you start, read *Generic Safety and Compliance Notices*, and print the following instructions.

For access, remove these parts in order, if any:

- “Computer cover” on page 52
- “Slim optical drive” on page 53

.

Replacement procedure

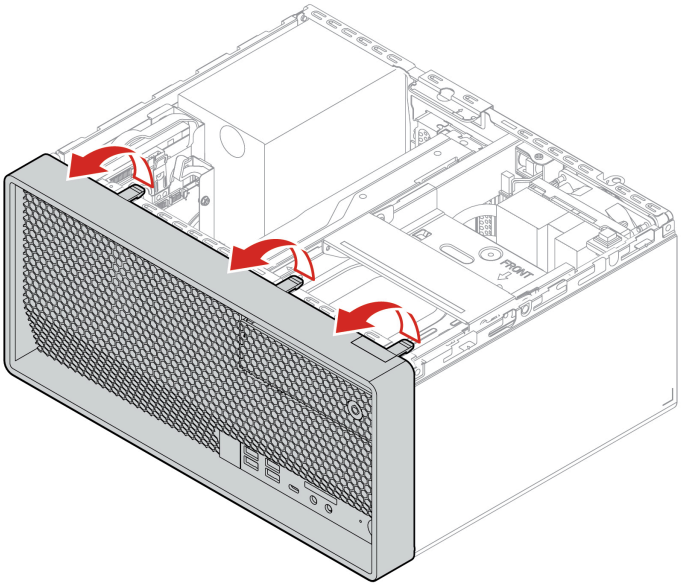

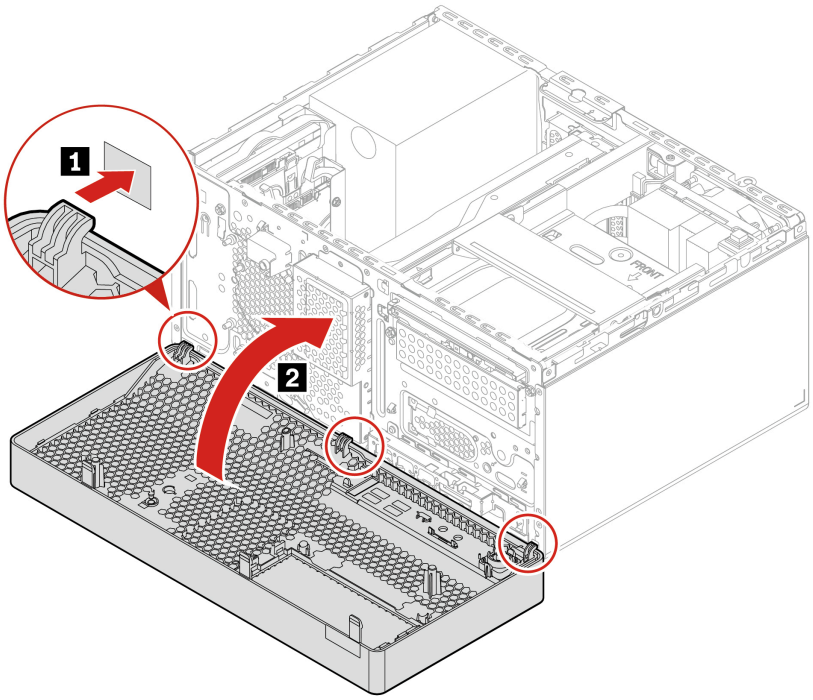

Primary storage drives

Prerequisite

Before you start, read *Generic Safety and Compliance Notices*, and print the following instructions.

Attention: The internal storage drive is sensitive. Inappropriate handling might cause damage and permanent loss of data. When handling the internal storage drive, observe the following guidelines:

- Replace the internal storage drive only for upgrade or repair. The internal storage drive is not designed for frequent changes or replacement.

- Before replacing the internal storage drive, make a backup copy of all the data that you want to keep.
- Do not touch the contact edge of the internal storage drive. Otherwise, the internal storage drive might get damaged.
- Do not apply pressure to the internal storage drive.
- Do not make the internal storage drive subject to physical shocks or vibration. Put the internal storage drive on a soft material, such as cloth, to absorb physical shocks.

Replacement procedure of the 2.5-inch primary storage drive, bracket, and cage

1. Remove the “Computer cover” on page 52.
2. Disconnect the signal cable and the power cable from the 2.5-inch primary storage drive.
3. Remove the 2.5-inch primary storage drive, bracket, and cage.

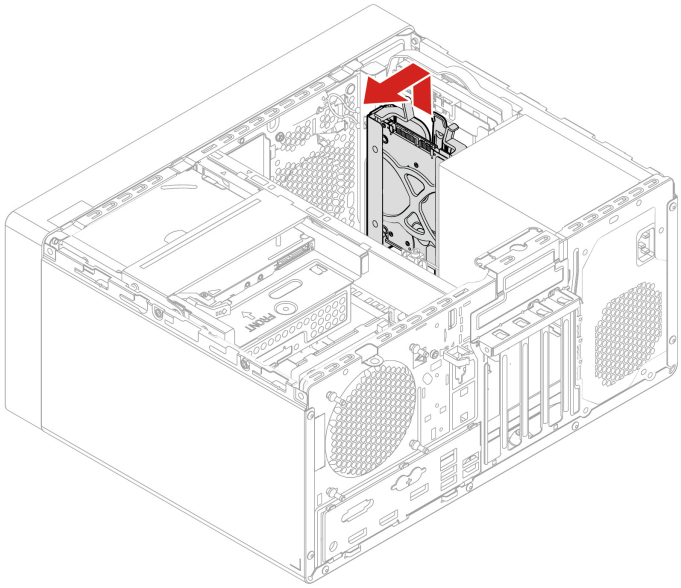

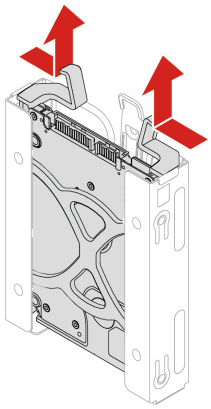

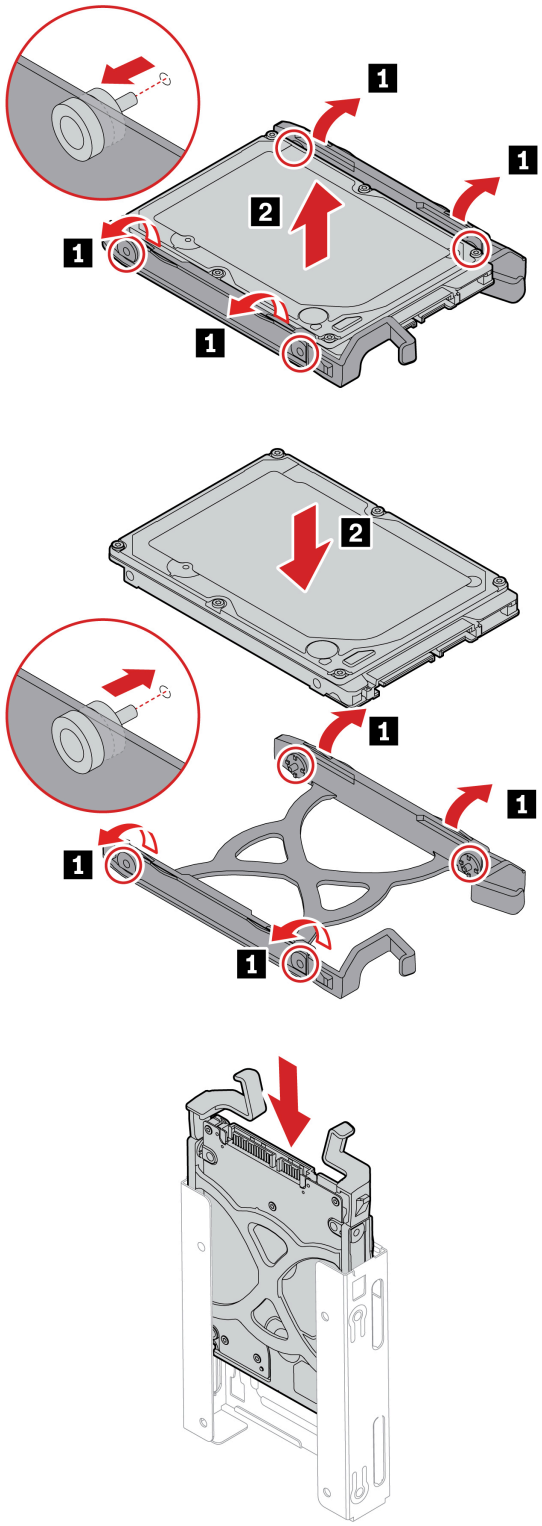
1
1
2
1
1
2
1
1
1
1

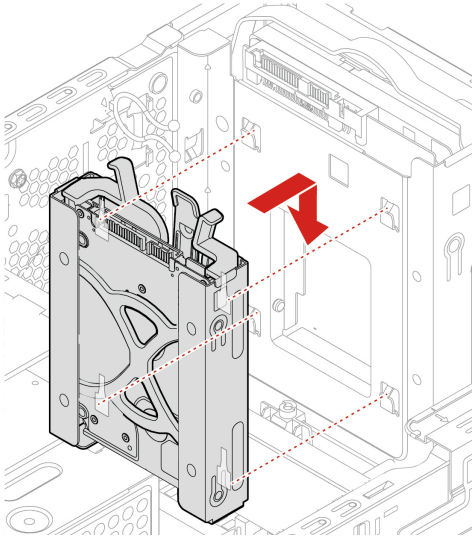

Removal steps of the 3.5-inch primary storage drive and bracket

1. Remove the “Computer cover” on page 52.
2. Disconnect the signal cable and the power cable from the 3.5-inch primary storage drive.
3. Remove the 3.5-inch primary storage drive and bracket.

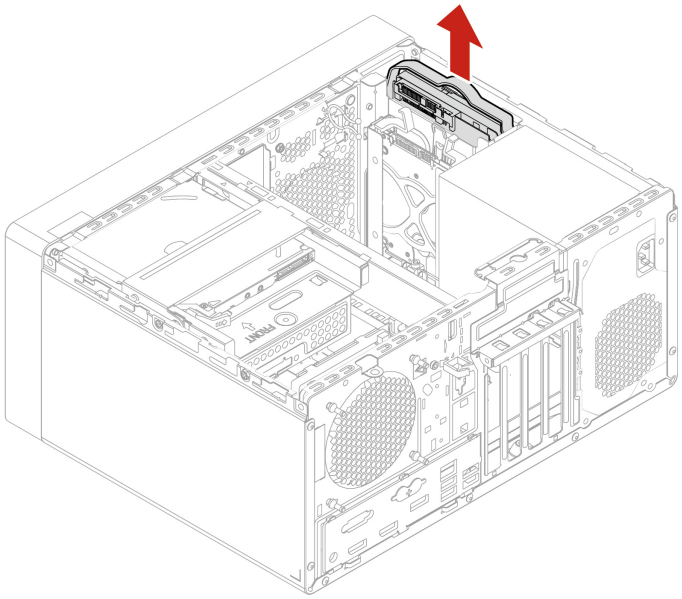

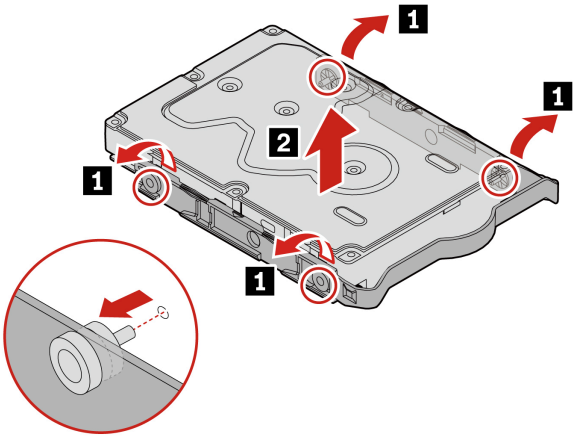

Removal steps of the 2.5-inch primary storage drive, Type-1 storage drive converter, and bracket

1. Remove the “Computer cover” on page 52.
2. Disconnect the signal cable and the power cable from the 2.5-inch primary storage drive.
3. Remove the 2.5-inch primary storage drive, Type-1 storage drive converter, and bracket.

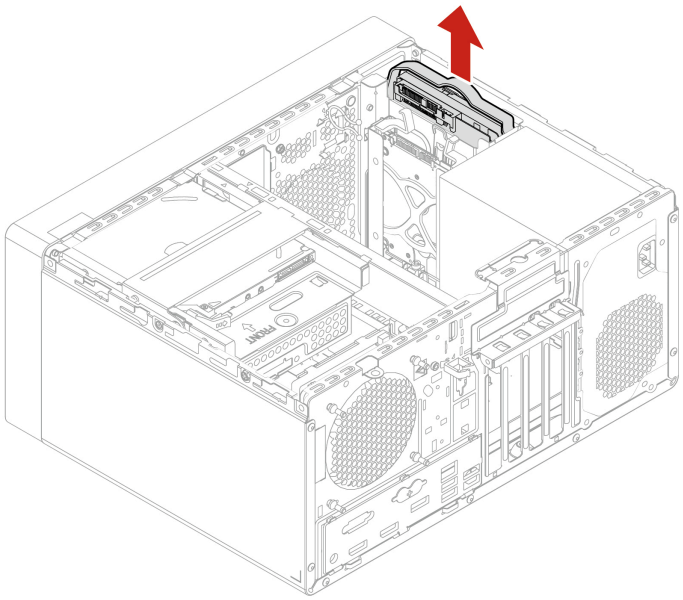

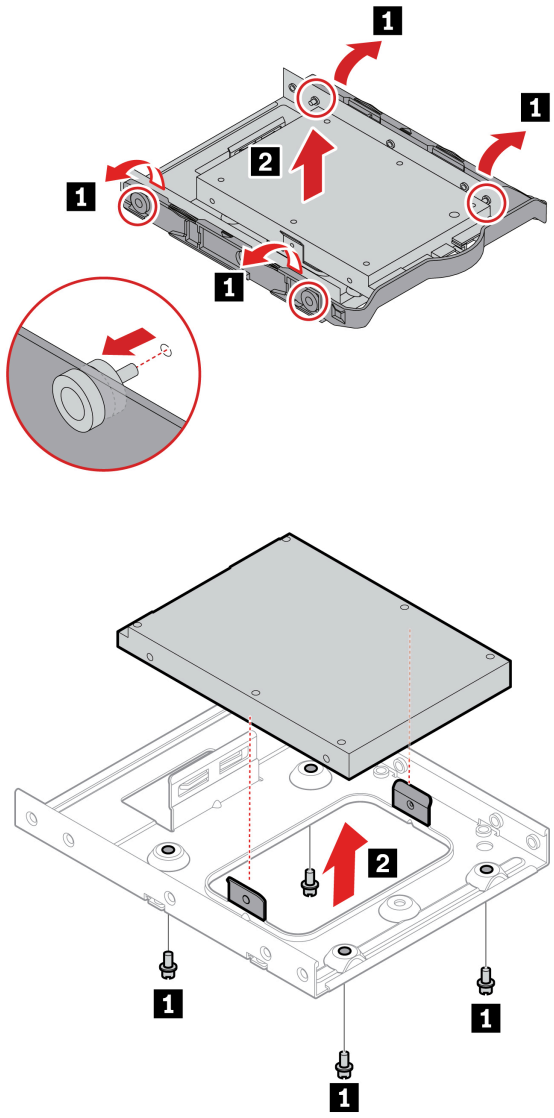

3.5-inch primary storage drive cage

Prerequisite

Before you start, read *Generic Safety and Compliance Notices*, and print the following instructions.

Attention: The internal storage drive is sensitive. Inappropriate handling might cause damage and permanent loss of data. When handling the internal storage drive, observe the following guidelines:

- Replace the internal storage drive only for upgrade or repair. The internal storage drive is not designed for frequent changes or replacement.
- Before replacing the internal storage drive, make a backup copy of all the data that you want to keep.
- Do not touch the contact edge of the internal storage drive. Otherwise, the internal storage drive might get damaged.
- Do not apply pressure to the internal storage drive.
- Do not make the internal storage drive subject to physical shocks or vibration. Put the internal storage drive on a soft material, such as cloth, to absorb physical shocks.

For access, remove these parts in order, if any:

- “Computer cover” on page 52
- “Slim optical drive” on page 53
- “Front bezel” on page 54
- “Primary storage drives” on page 55

Removal steps

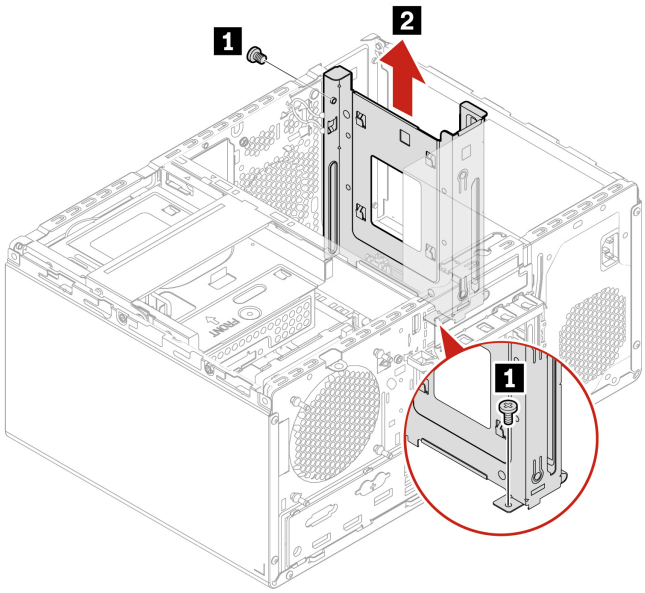

Slim-optical-drive cage

Prerequisite

Before you start, read *Generic Safety and Compliance Notices*, and print the following instructions.

For access, do the following:

1. Remove these parts in order, if any:
   - “Computer cover” on page 52
   - “Slim optical drive” on page 53
   - “Front bezel” on page 54
2. Disconnect the signal cable and power cable (if any) from the secondary storage drive under the slim-optical-drive.

Replacement procedure

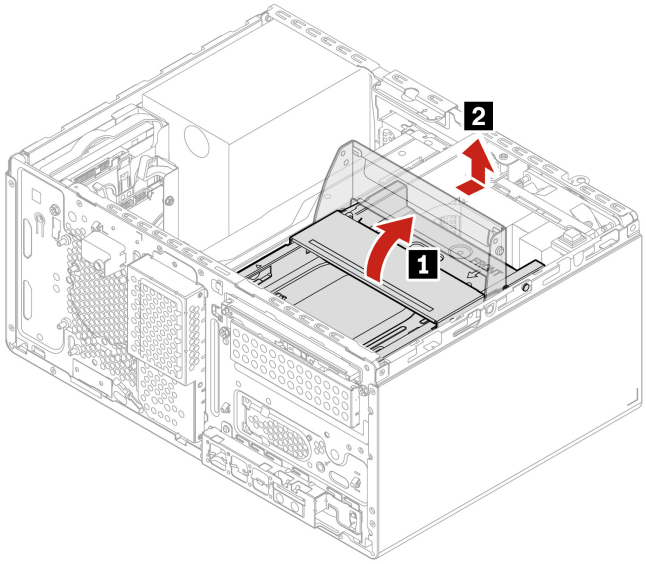

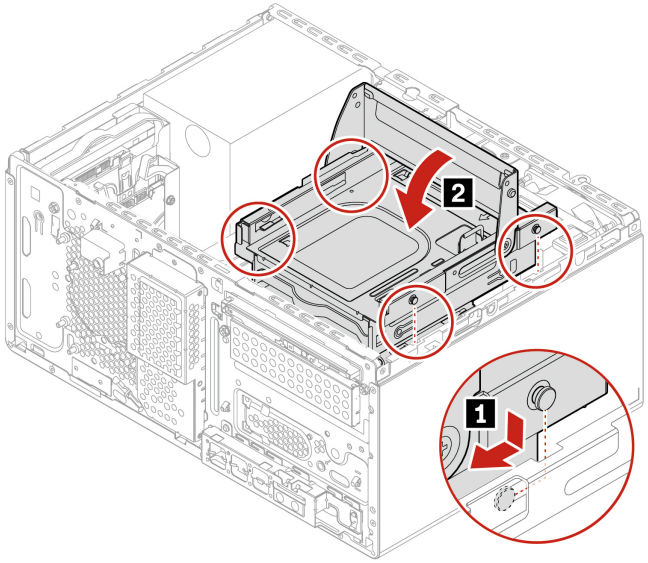

Secondary storage drives

Prerequisite

Before you start, read *Generic Safety and Compliance Notices*, and print the following instructions.

Attention: The internal storage drive is sensitive. Inappropriate handling might cause damage and permanent loss of data. When handling the internal storage drive, observe the following guidelines:

- Replace the internal storage drive only for upgrade or repair. The internal storage drive is not designed for frequent changes or replacement.
- Before replacing the internal storage drive, make a backup copy of all the data that you want to keep.
- Do not touch the contact edge of the internal storage drive. Otherwise, the internal storage drive might get damaged.

- Do not apply pressure to the internal storage drive.
- Do not make the internal storage drive subject to physical shocks or vibration. Put the internal storage drive on a soft material, such as cloth, to absorb physical shocks.

For access, remove these parts in order, if any:

- “Computer cover” on page 52
- “Slim optical drive” on page 53
- “Front bezel” on page 54
- “Slim-optical-drive cage” on page 61

Removal steps of the 2.5-inch secondary storage drive, bracket, and cage

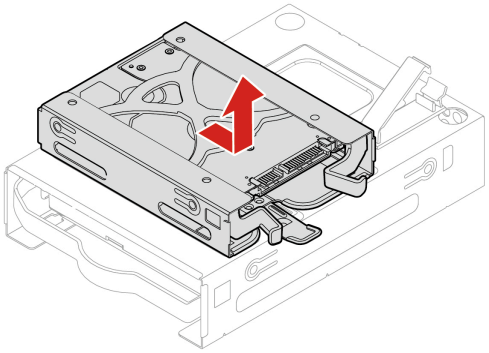

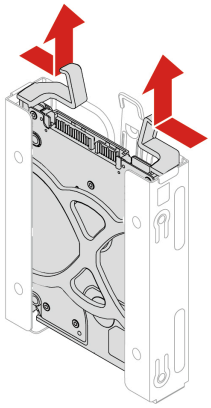

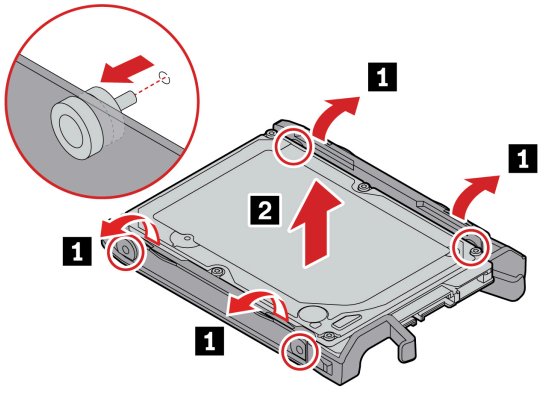

Removal steps of the 3.5-inch secondary storage drive, plastic bracket, and cage

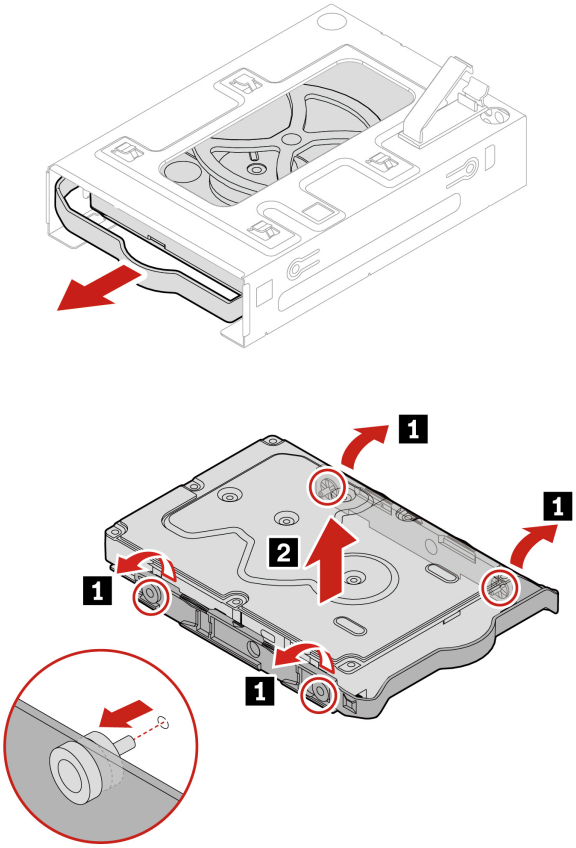

Storage drive in the front-access storage enclosure

Prerequisite

Before you start, read *Generic Safety and Compliance Notices*, and print the following instructions.

Attention: The internal storage drive is sensitive. Inappropriate handling might cause damage and permanent loss of data. When handling the internal storage drive, observe the following guidelines:

- Replace the internal storage drive only for upgrade or repair. The internal storage drive is not designed for frequent changes or replacement.
- Before replacing the internal storage drive, make a backup copy of all the data that you want to keep.
- Do not touch the contact edge of the internal storage drive. Otherwise, the internal storage drive might get damaged.
- Do not apply pressure to the internal storage drive.
- Do not make the internal storage drive subject to physical shocks or vibration. Put the internal storage drive on a soft material, such as cloth, to absorb physical shocks.

You can install or replace a storage drive in the front-access storage enclosure. The storage drive also can be hot-swappable, which means that you can install or replace the drive without even turning off your computer. Therefore, lock the enclosure cover to prevent the unexpected removal. The keys are attached at the rear of the computer. Store the keys in a secure place.

The storage drive in the front-access storage enclosure is hot-swappable only when the following requirements are met:

- The eSATA mode of the SATA 4 connector is enabled in BIOS by doing the following:
  1. Restart the computer. When the logo screen is displayed, press F1 or Fn+F1.
  2. Select **Devices → ATA Drive Setup → SATA Drive 4 Hot-Plug Support** and press Enter.
  3. Select **Enabled** and press Enter.
  4. Press F10 or Fn+F10 to save the changes and exit.
- The SATA cable of the front-access storage enclosure is connected to the SATA 4 connector on the system board.
- The operating system of your computer does not reside on the storage drive installed in the front-access storage enclosure.

Attention: If any of the above requirements are not met, do not install or replace the storage drive when the computer is turned on. Otherwise, data on the storage drive might get damaged.

Removal steps of the 3.5-inch storage drive

Note: Before removing an old 3.5-inch storage drive, safely eject the old storage drive from the operating system first. For more information, see the Windows help system.

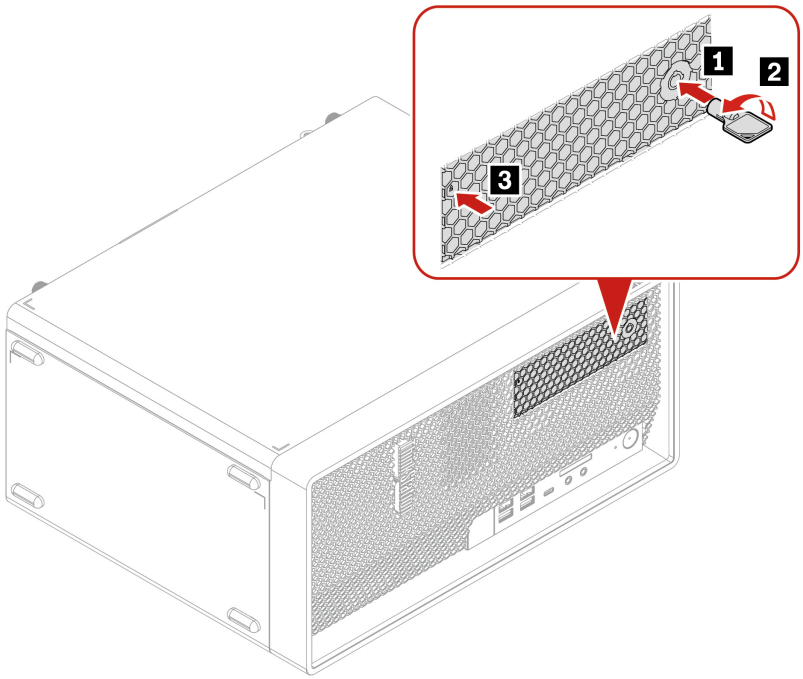

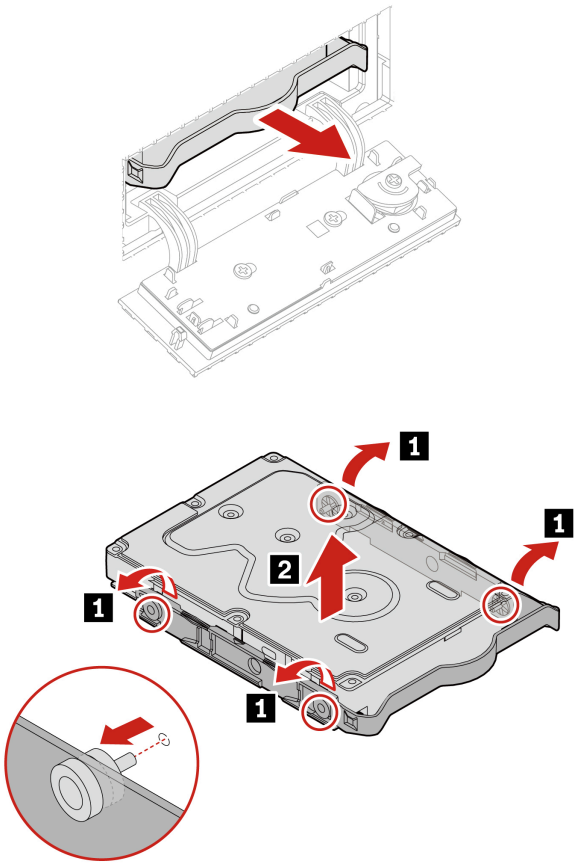

Replacement procedure of the 2.5-inch storage drive, Type-2 storage drive converter, and bracket

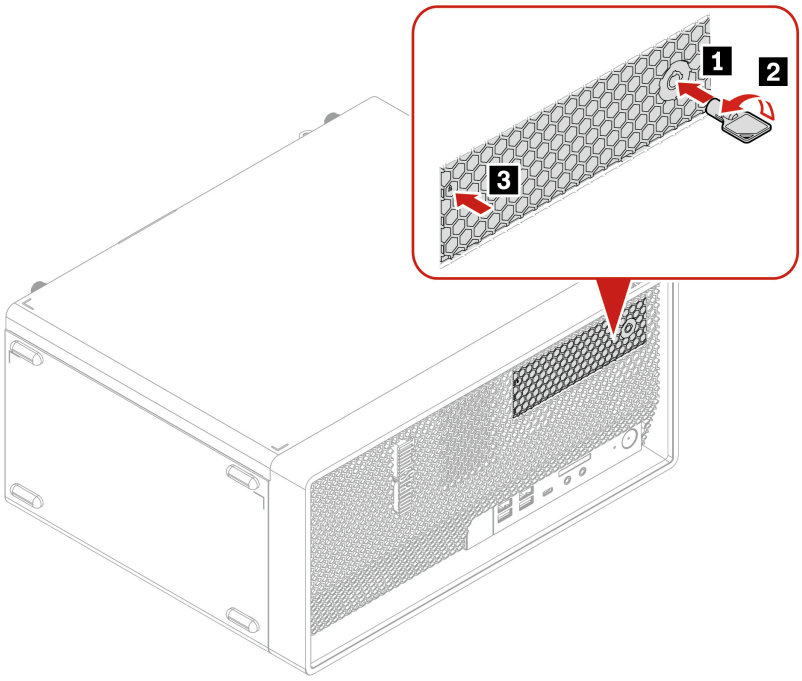

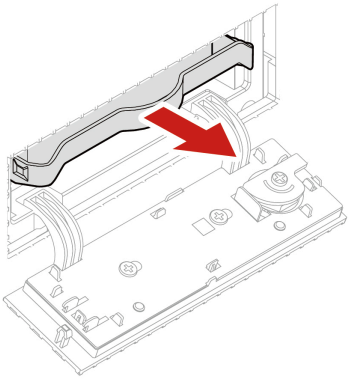

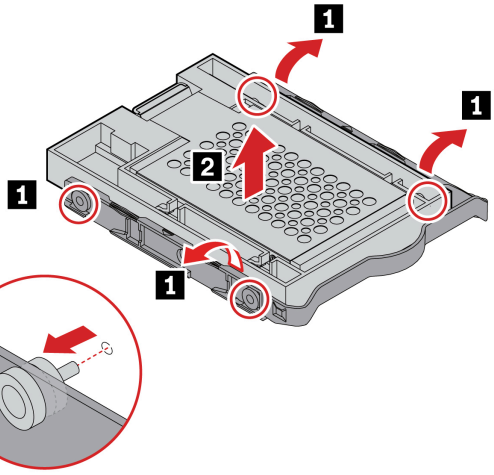
1
1
2
1
1

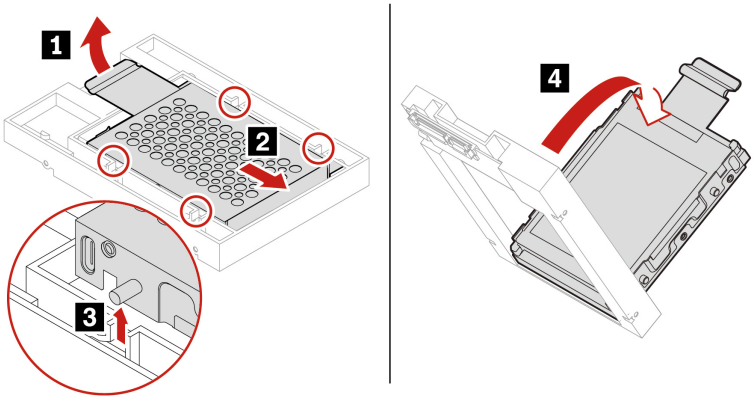
1
2
3
4

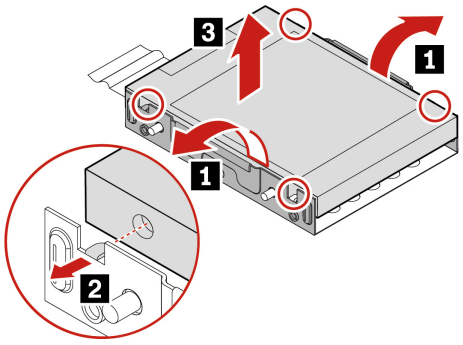
3
1
1
2

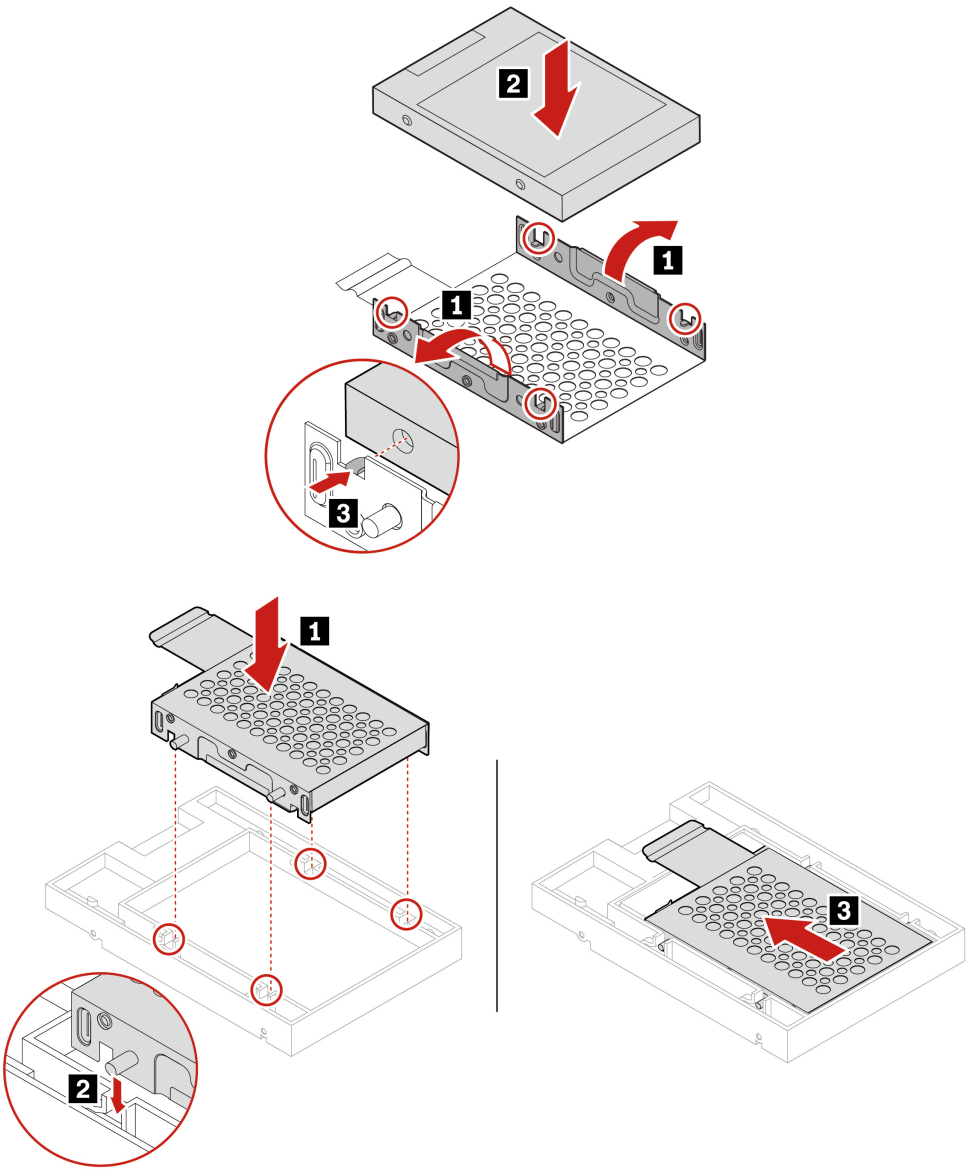
2
1
1
3
1
2
3

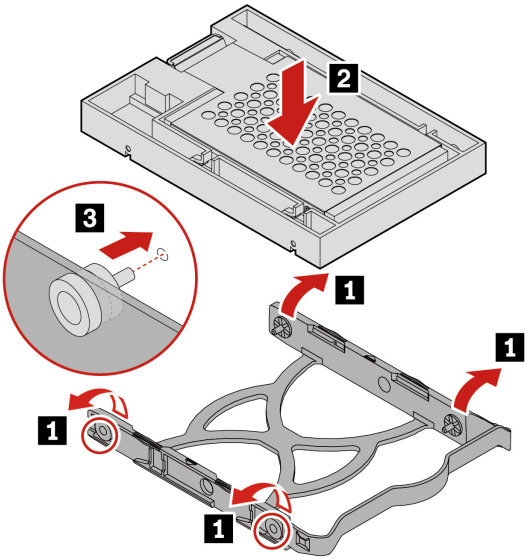

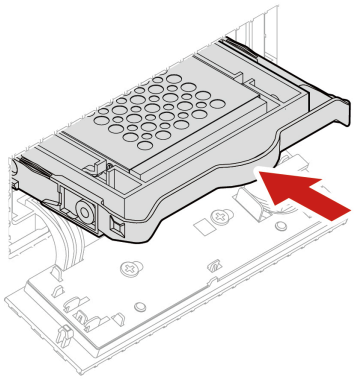

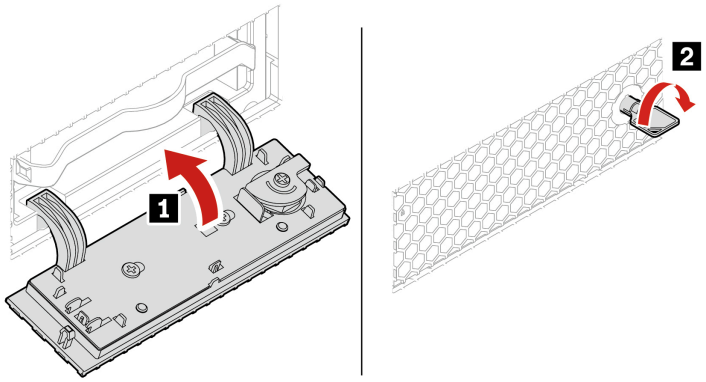

Note: Before removing an old 2.5-inch storage drive, safely eject the old storage drive from the operating system first. For more information, see the Windows help system.

PCI-Express card

Prerequisite

Before you start, read *Generic Safety and Compliance Notices*, and print the following instructions.

For access, remove the “Computer cover” on page 52.

Notes:

- Do not attempt to install any PCI-Express cards other than discrete graphics card to PCI-Express card slot 1.
- If there is only one discrete graphics card, install it to PCI-Express card slot 1.
- If there are two discrete graphics cards, install the one with higher power consumption to PCI-Express card slot 1, and install the other to PCI-Express card slot 3.

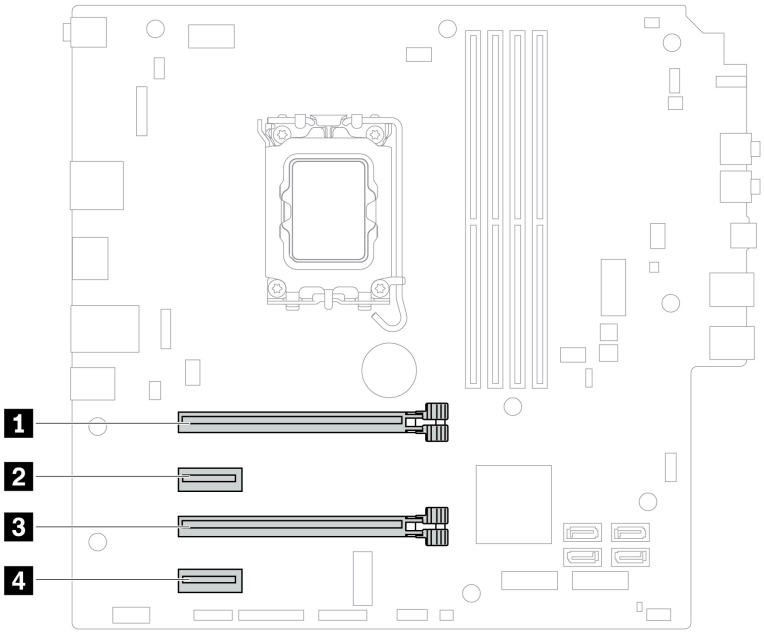

Replacement procedure

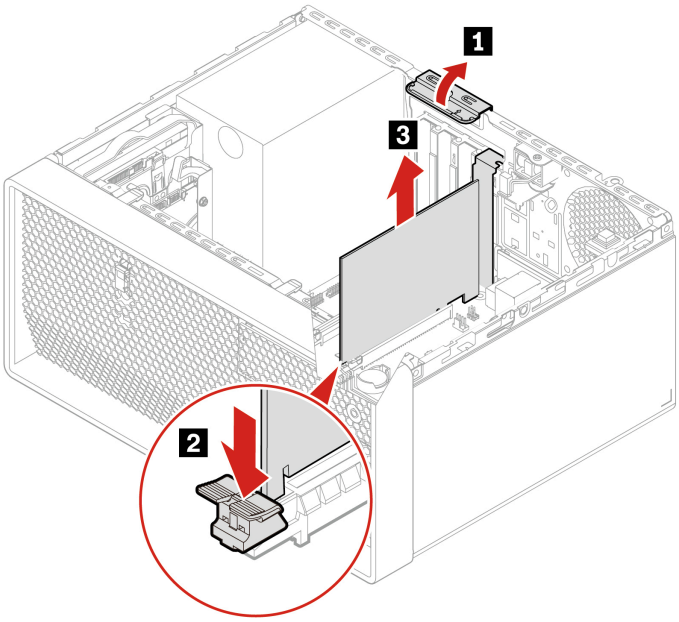

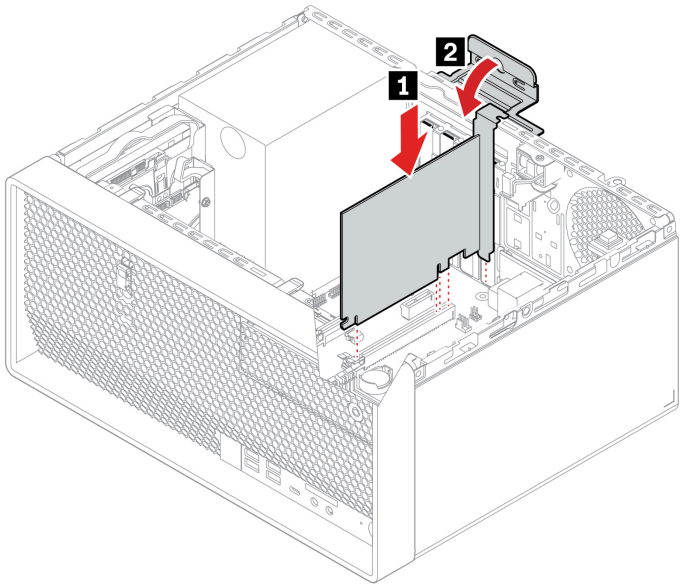

Graphics card fan

Prerequisite

Before you start, read *Generic Safety and Compliance Notices*, and print the following instructions.

For access, remove the “Computer cover” on page 52.

Replacement procedure

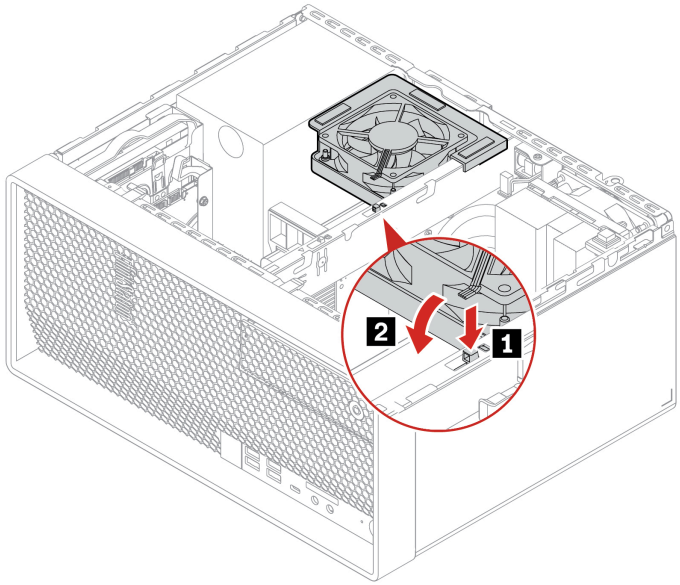

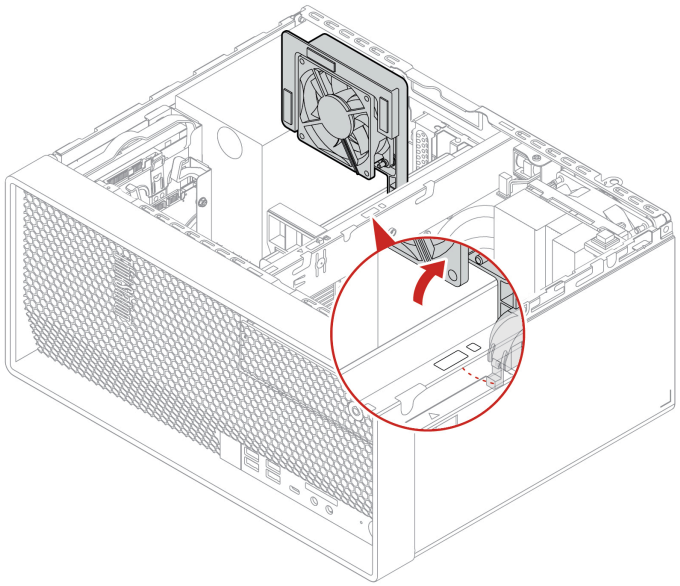

Graphics card holder

Prerequisite

Before you start, read *Generic Safety and Compliance Notices*, and print the following instructions.

For access, remove the “Computer cover” on page 52.

Replacement procedure

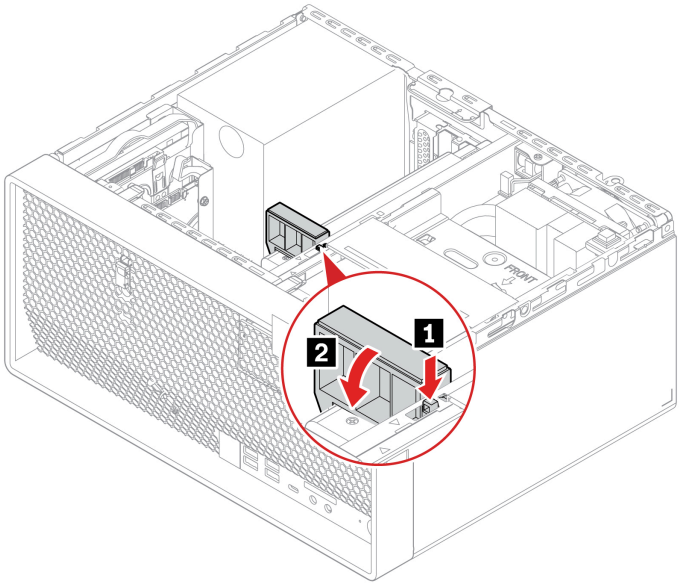

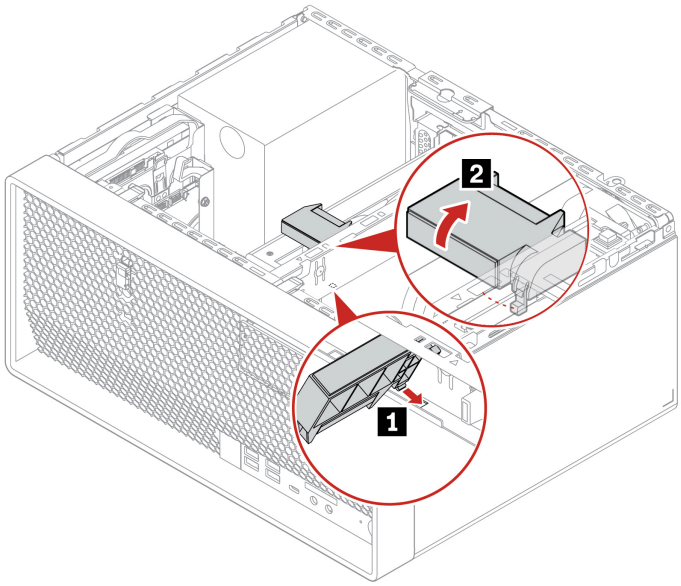

Graphics card

Prerequisite

Before you start, read *Generic Safety and Compliance Notices*, and print the following instructions.

Replacement procedure of the graphics card secured with a bracket and a plastic holder

For access, do the following:

1. Remove these parts in order, if any:
   - “Computer cover” on page 52
   - “Slim optical drive” on page 53
   - “Slim-optical-drive cage” on page 61
   - “Graphics card fan” on page 71
   - “Graphics card holder” on page 72
2. Disconnect the power cable (if any) from the graphics card.

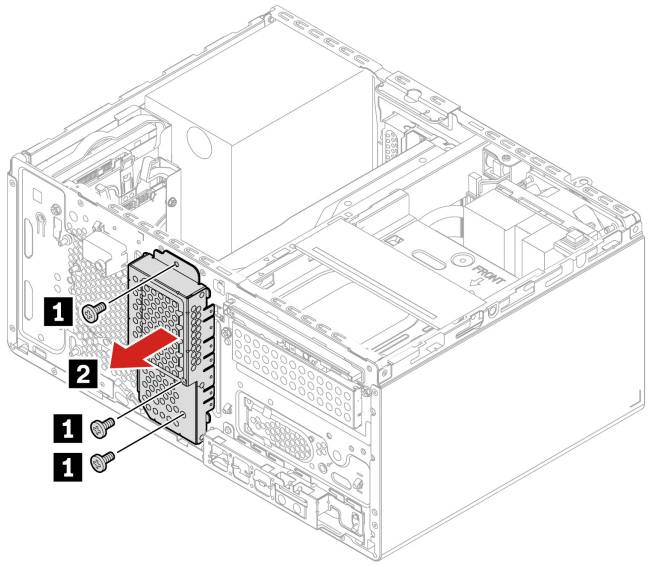
1
2
1
1

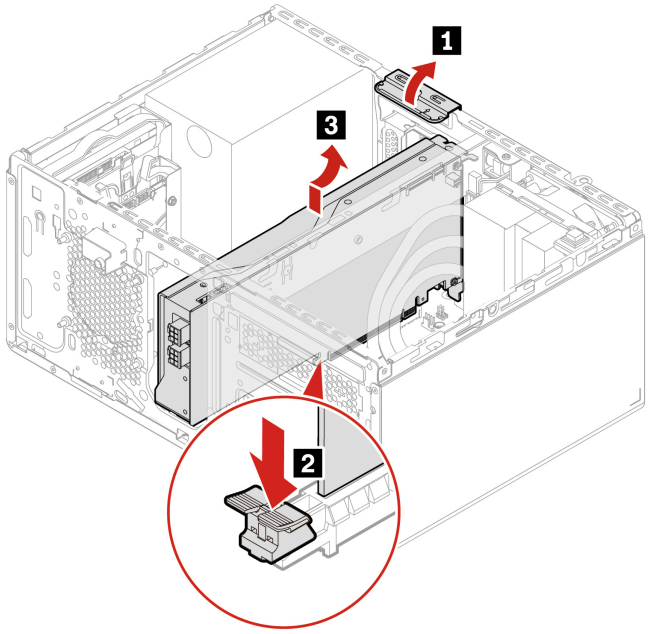
1
3
2

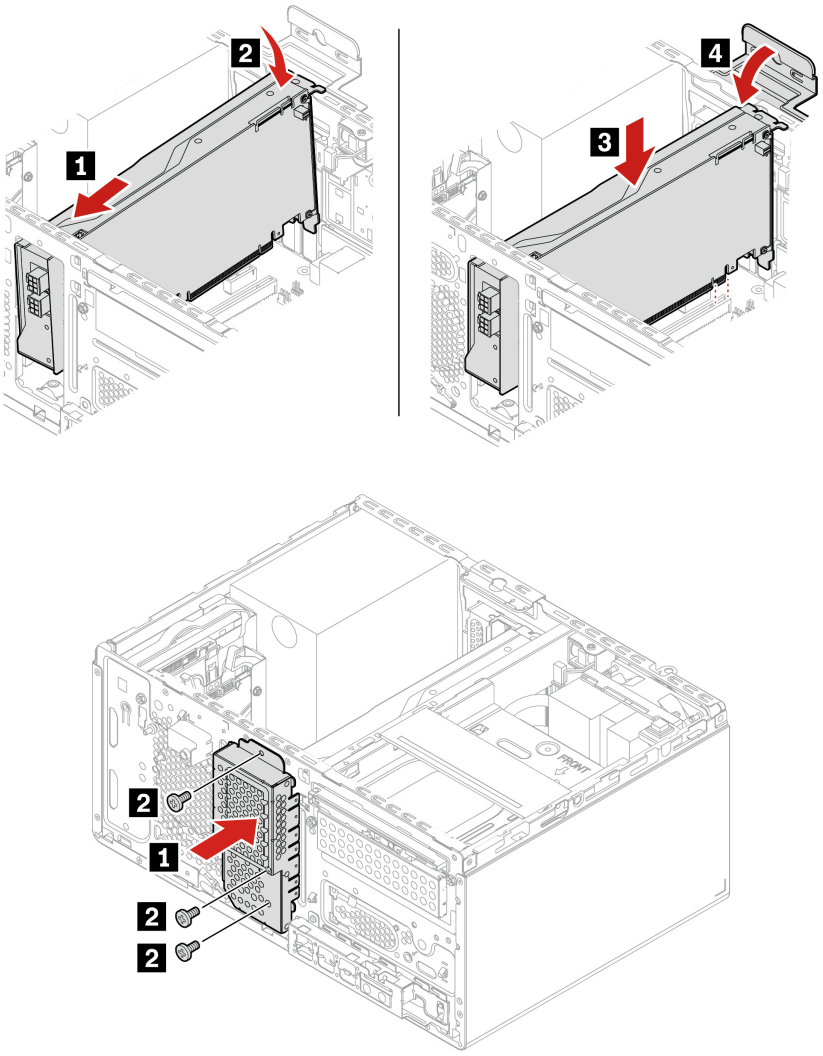

Removal steps of the graphics card secured with a plastic holder

For access, do the following:

1. Remove these parts in order, if any:
   - “Computer cover” on page 52
   - “Graphics card fan” on page 71
   - “Graphics card holder” on page 72
2. Disconnect the power cable (if any) from the graphics card.

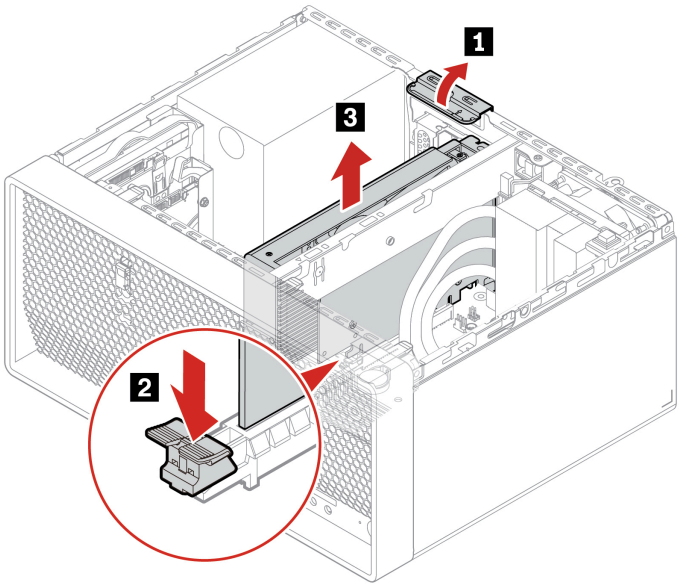

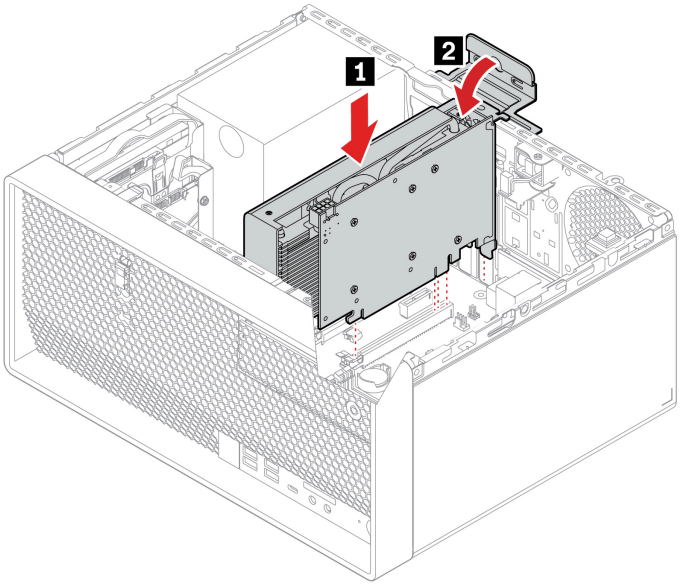

M.2 solid-state drive and heat sink

Prerequisite

Before you start, read *Generic Safety and Compliance Notices*, and print the following instructions.



Before you open the computer cover, turn off the computer and wait several minutes until the computer is cool.

Attention: The internal storage drive is sensitive. Inappropriate handling might cause damage and permanent loss of data. When handling the internal storage drive, observe the following guidelines:

- Replace the internal storage drive only for upgrade or repair. The internal storage drive is not designed for frequent changes or replacement.
- Before replacing the internal storage drive, make a backup copy of all the data that you want to keep.
- Do not touch the contact edge of the internal storage drive. Otherwise, the internal storage drive might get damaged.
- Do not apply pressure to the internal storage drive.
- Do not make the internal storage drive subject to physical shocks or vibration. Put the internal storage drive on a soft material, such as cloth, to absorb physical shocks.

Removal steps of the M.2 solid-state drive Gen 4

- Remove the “Computer cover” on page 52.
- Remove the “2.5-inch primary storage drive, bracket, and cage” on page 56.
- Remove the M.2 solid-state drive and the heat sink (if any) depending on the computer model.
  - For computers without the heat sink for the M.2 solid-state drive:

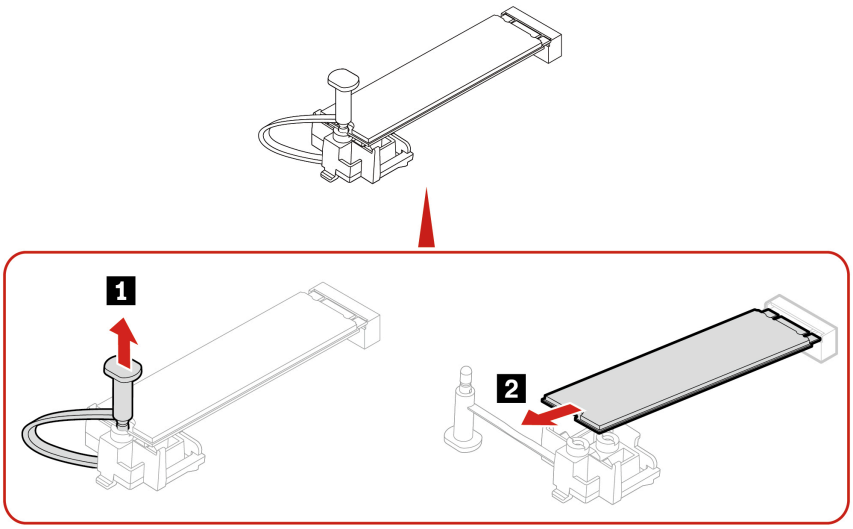

  - For computers with the heat sink for the M.2 solid-state drive, do one of the following depending on the computer model:
    - Type 1

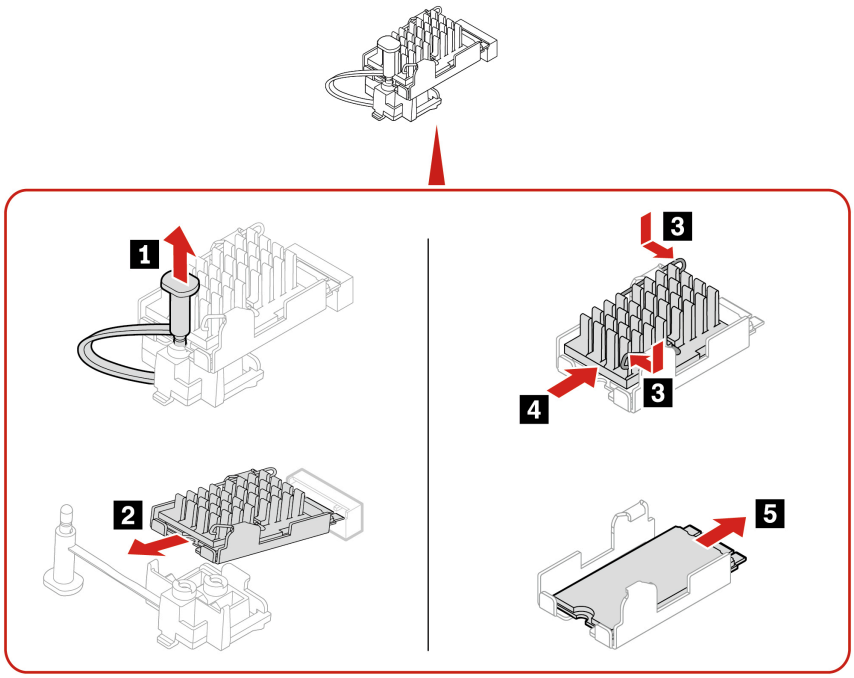

– Type 2

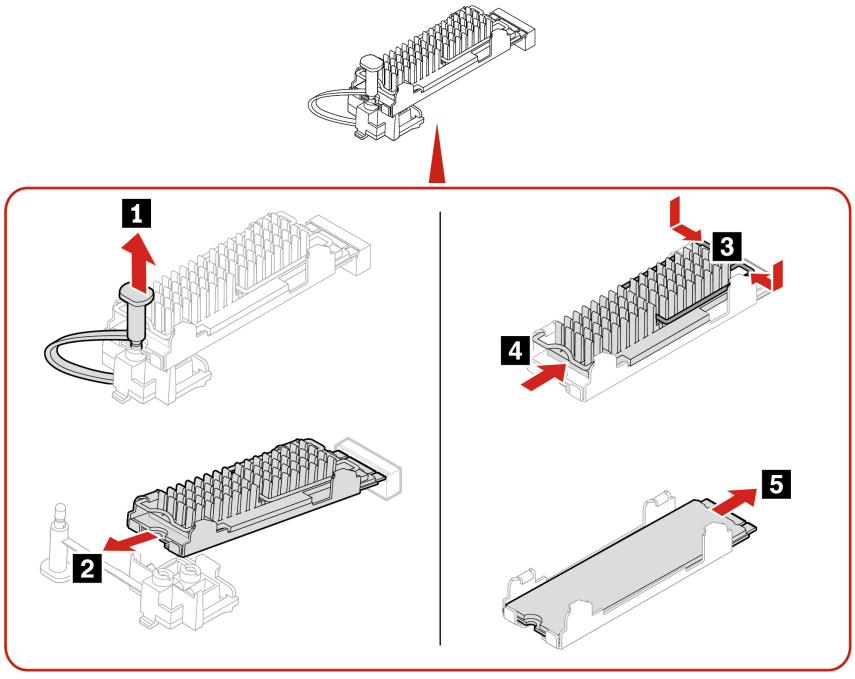

– Type 3

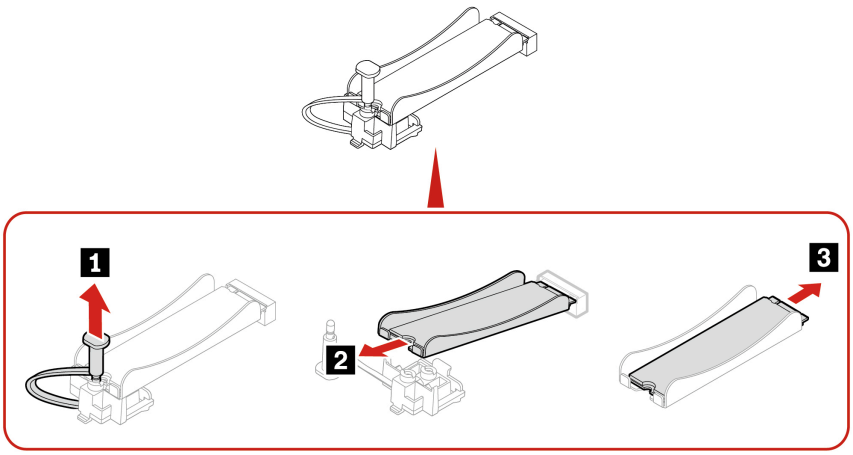

Note: Remove the film that covers the thermal pad (if any) when installing the M.2 solid-state drive and the heat sink.

Replacement procedure of the M.2 solid-state drive in an M.2 solid-state drive PCIe adapter

1. Remove the “Computer cover” on page 52.
2. Locate and remove the M.2 solid-state drive PCIe adapter from the PCIe card slot. See “PCI-Express card” on page 69.
3. Replace the M.2 solid-state drive and the heat sink.

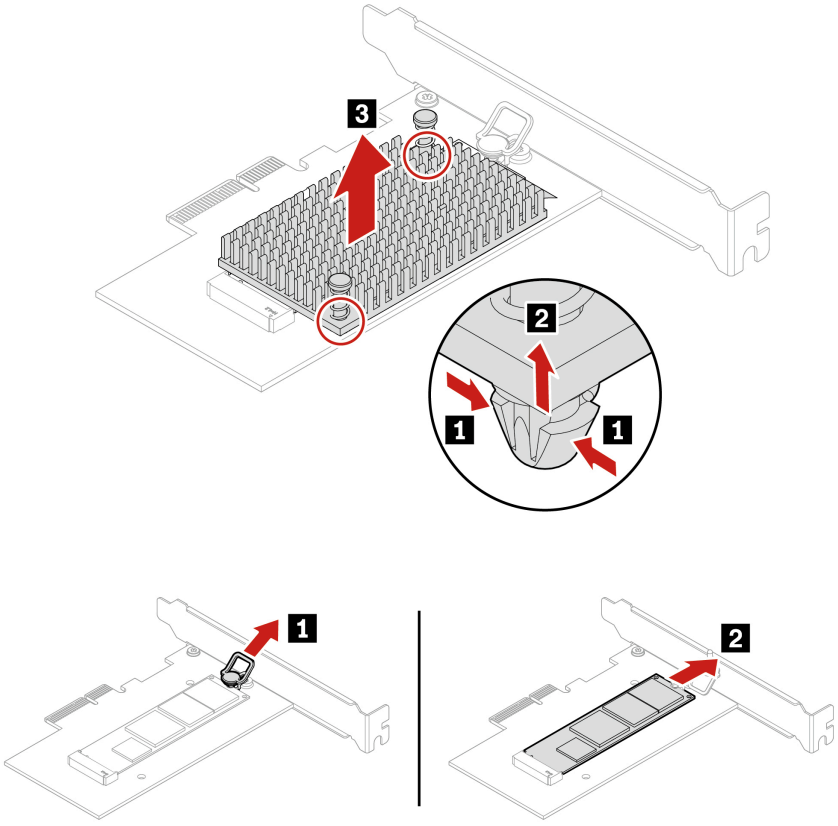

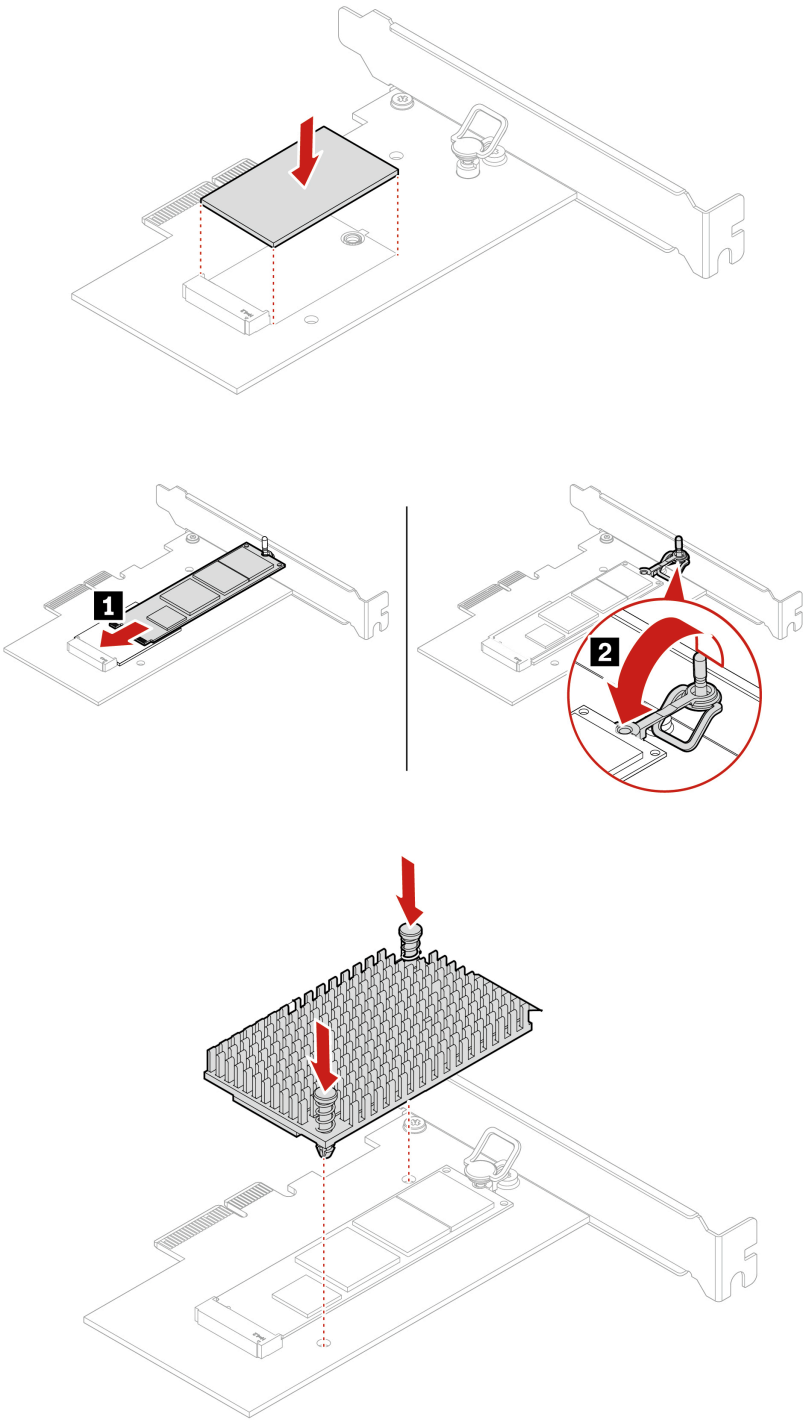

M.2 solid-state drive bracket

Prerequisite

Before you start, read *Generic Safety and Compliance Notices*, and print the following instructions.

For access, remove these parts in order, if any:

- “Computer cover” on page 52
- “2.5-inch primary hard disk drive, bracket, and cage” on page 56
- “M.2 solid-state drive and heat sink” on page 76

Replacement procedure

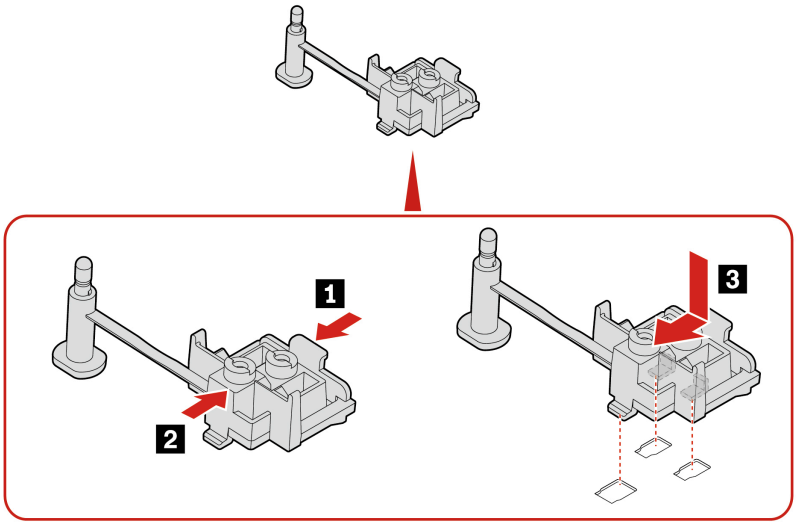

Front fan

Prerequisite

Before you start, read *Generic Safety and Compliance Notices*, and print the following instructions.

For access, do the following:

1. Remove these parts in order, if any:
   - “Computer cover” on page 52
   - “Front bezel” on page 54
2. Disconnect the front fan cable from the front fan connector on the system board.

Note: The front fan is attached to the chassis by four rubber mounts. Stretch the tips of the rubber mounts and gently pull the front fan assembly out of the chassis.

Replacement procedure

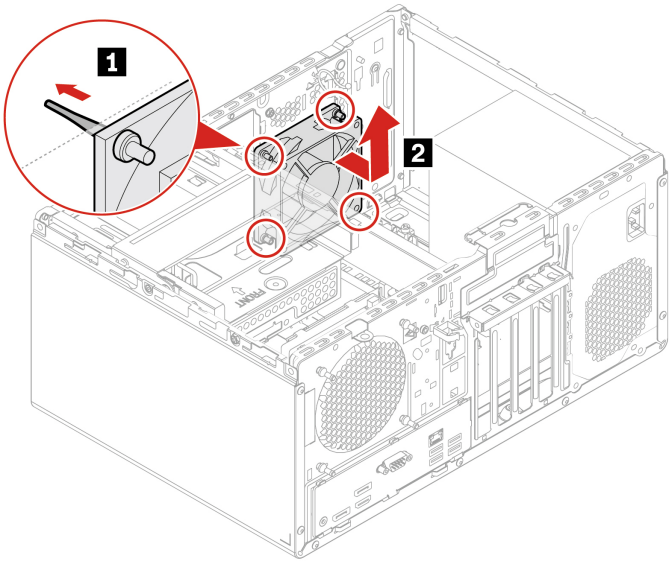

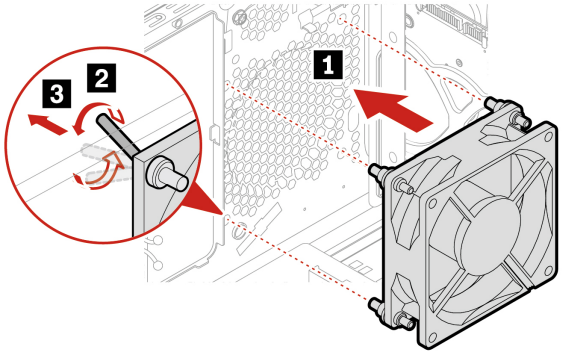

Note: Align the rubber mounts with the corresponding holes in the chassis and push the rubber mounts through the holes. Rotate and pull the tips of the rubber mounts until the front fan assembly is secured.

Rear fan

Prerequisite

Before you start, read *Generic Safety and Compliance Notices*, and print the following instructions.

For access, do the following:

1. Remove the “Computer cover” on page 52.
2. Disconnect the rear fan cable from the rear fan connector on the system board.

Replacement procedure

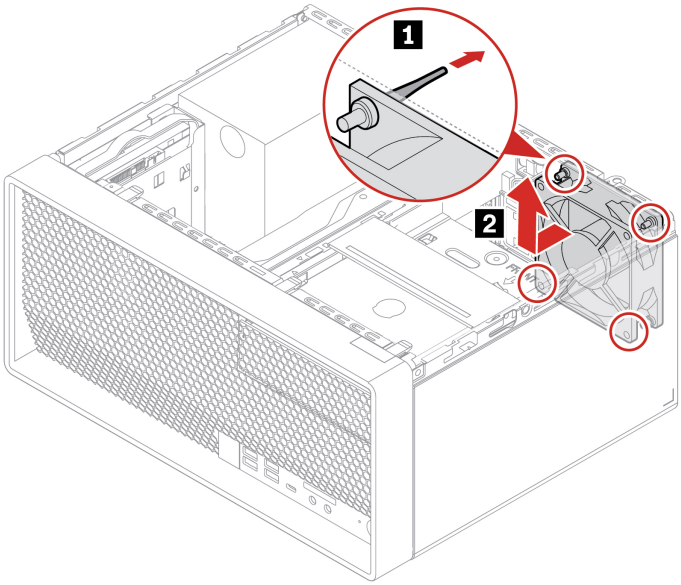

Note: The rear fan is attached to the chassis by four rubber mounts. Stretch the tips of the rubber mounts and gently pull the rear fan assembly out of the chassis.

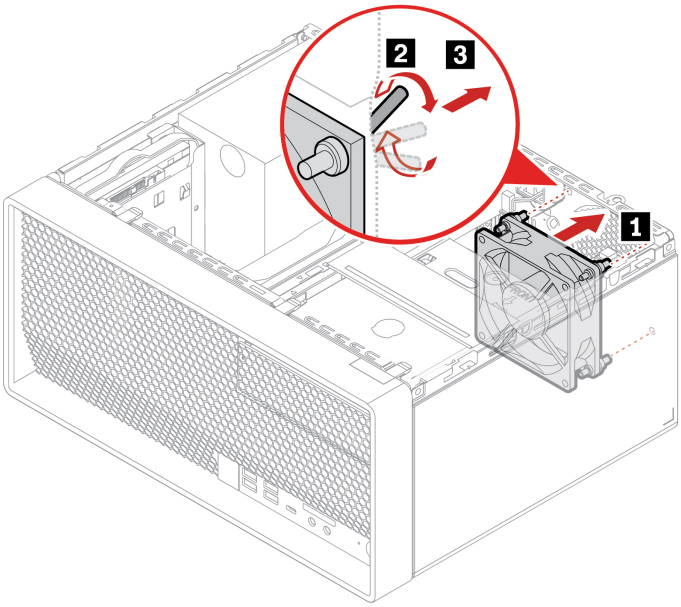

Note: Align the rubber mounts with the corresponding holes in the chassis and push the rubber mounts through the holes. Rotate and pull the tips of the rubber mounts until the rear fan assembly is secured.

Heat-sink-and-fan assembly

Prerequisite

Before you start, read *Generic Safety and Compliance Notices*, and print the following instructions.

The heat sink might be very hot. Before you open the computer cover, turn off the computer and wait several minutes until the computer is cool.

For access, do the following:

1. Remove these parts in order, if any:
   - “Computer cover” on page 52
   - “Slim optical drive” on page 53
   - “Front bezel” on page 54
   - “Slim-optical-drive cage” on page 61
2. Disconnect the heat-sink-and-fan assembly cable from the microprocessor fan connector on the system board.

Removal steps of the 65-watt heat-sink-and-fan assembly

Follow the following sequence to loosen the four screws that secure the heat-sink-and-fan assembly to the system board. Then, lift the heat-sink-and-fan assembly off the system board.

- Partially loosen screw 1a, fully loosen screw 1b, and then fully loosen screw 1a.
- Partially loosen screw 1c, fully loosen screw 1d, and then fully loosen screw 1c.

Notes:

- Carefully loosen the four screws to avoid any possible damage to the system board. The four screws cannot be removed from the heat-sink-and-fan assembly.
- You might have to gently twist the heat-sink-and-fan assembly to free it from the microprocessor.
- Do not touch the thermal grease while handling the heat-sink-and-fan assembly.

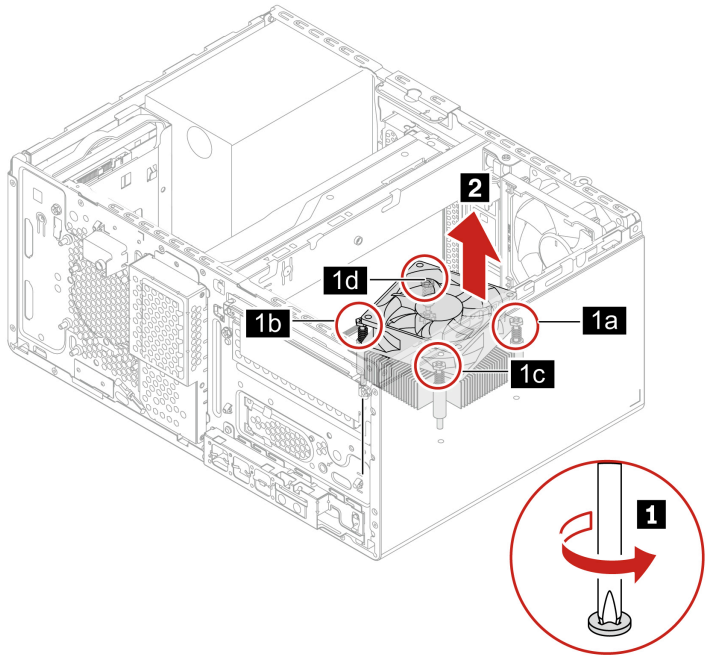

Step	Screw (quantity)	Torque
1	#6-32 × 58 mm (2.3 inches), Nickel coated (4)	0.56 ± 0.11 Nm (5.75 ± 1.15 kgf-cm)

Removal steps of the 125-watt heat-sink-and-fan assembly

1. Remove the four screws 1 that secure the heat-sink-and-fan assembly to the chassis.
2. Follow the following sequence to loosen the four screws that secure the heat-sink-and-fan assembly to the system board. Then, lift the heat-sink-and-fan assembly off the system board.
   - Partially loosen screw 2a, fully loosen screw 2b, and then fully loosen screw 2a.
   - Partially loosen screw 2c, fully loosen screw 2d, and then fully loosen screw 2c.

   Notes:
   - Carefully loosen the four screws to avoid any possible damage to the system board. The four screws cannot be removed from the heat-sink-and-fan assembly.
   - You might have to gently twist the heat-sink-and-fan assembly to free it from the microprocessor.
   - Do not touch the thermal grease while handling the heat-sink-and-fan assembly.
   - In case you need to remove the chassis beam as well, ensure that the 125-watt heat-sink-and-fan assembly has been removed before you remove the chassis beam.

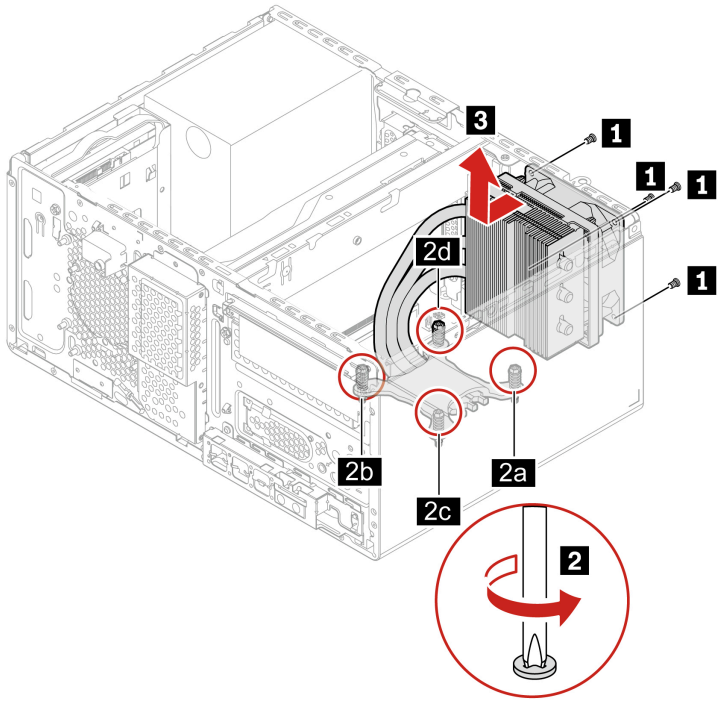

Step	Screw (quantity)	Torque
1	#6-32 × 8 mm (0.3 inches), Nickel coated (4)	0.56 ± 0.11 Nm (5.75 ± 1.15 kgf-cm)
2	#6-32 × 29 mm (1.1 inches), Nickel coated (4)	0.56 ± 0.11 Nm (5.75 ± 1.15 kgf-cm)

Chassis beam

Prerequisite

Before you start, read *Generic Safety and Compliance Notices*, and print the following instructions.

For access, remove these parts in order, if any:

- “Computer cover” on page 52
- “Slim optical drive” on page 53
- “Front bezel” on page 54
- “Slim-optical-drive cage” on page 61
- “Graphics card fan” on page 71
- “Graphics card holder” on page 72
- “Graphics card” on page 73
- “125-watt heat-sink-and-fan assembly” on page 85

Replacement procedure

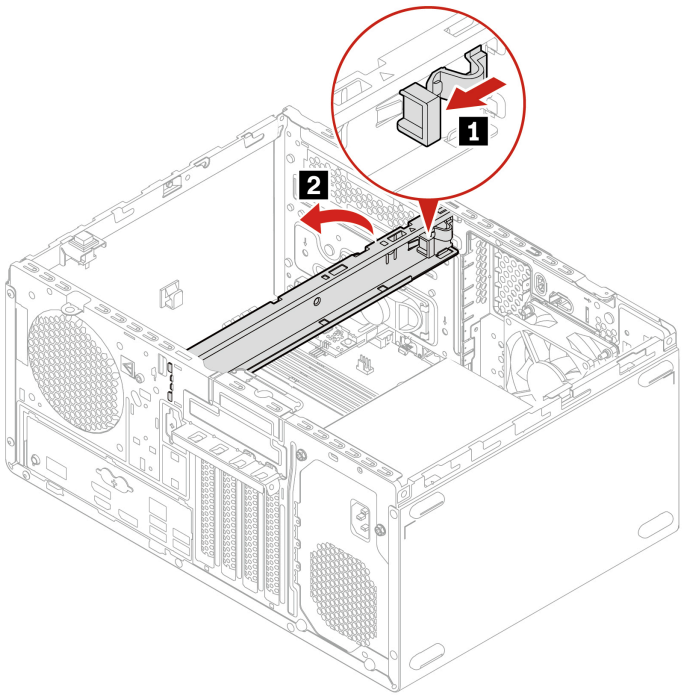

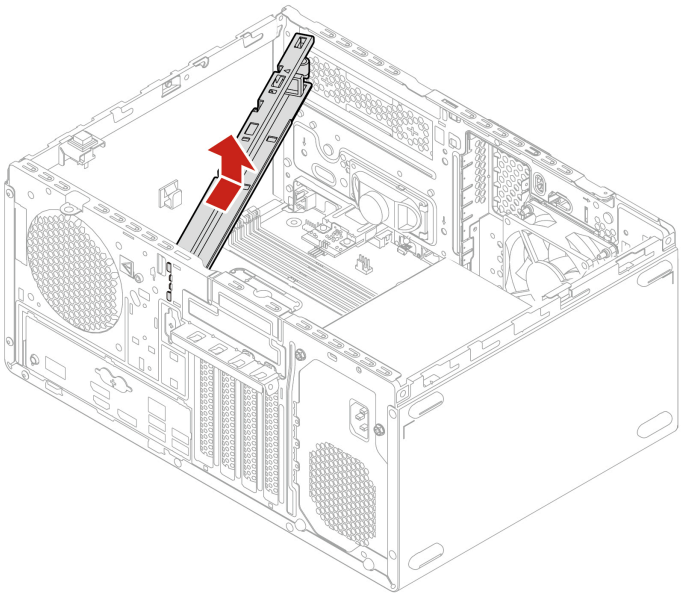

Memory module

Prerequisite

Before you start, read *Generic Safety and Compliance Notices*, and print the following instructions.

Ensure that you follow the installation order for memory modules shown in the following illustration.

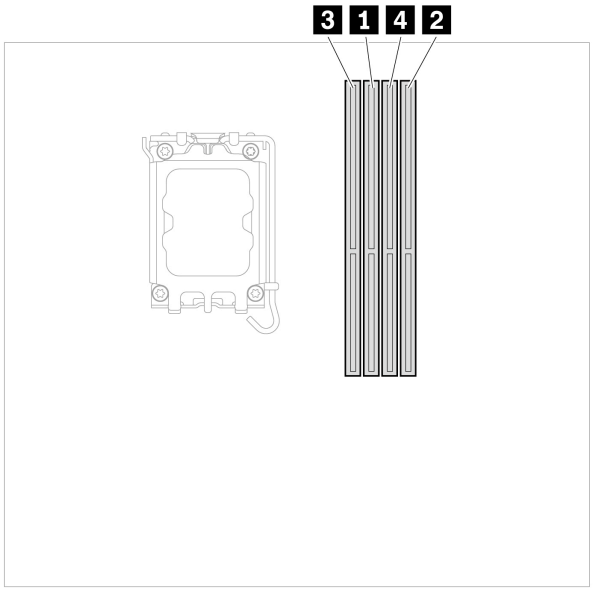

For access, remove these parts in order, if any:

- “Computer cover” on page 52

- “Slim optical drive” on page 53
- “Front bezel” on page 54
- “Slim-optical-drive cage” on page 61

Replacement procedure

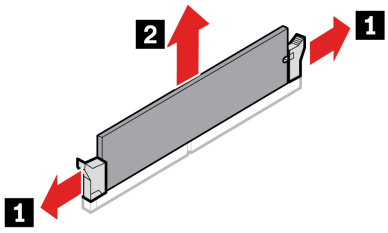

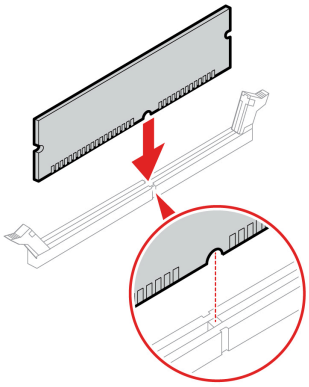

Note: During the installation, ensure that you align the memory module to the slot and press down on both ends until the latches are fully engaged with a click.

Power supply assembly

Prerequisite

Before you start, read *Generic Safety and Compliance Notices*, and print the following instructions.

Although there are no moving parts in the computer after the power cord has been disconnected, the following warnings are required for your safety.



Keep fingers and other parts of your body away from hazardous, moving parts. If you suffer an injury, seek medical care immediately. Never remove the cover on a power supply or any part that has the following label attached.



Hazardous voltage, current, and energy levels are present inside any component that has this label attached. There are no serviceable parts inside these components. If you suspect a problem with one of these parts, contact a service technician.

For access, do the following:

1. Remove these parts in order, if any:
   - “Computer cover” on page 52
   - “Slim optical drive” on page 53
   - “Front bezel” on page 54
   - “Primary storage drives” on page 55
   - “3.5-inch primary storage drive cage” on page 60
2. Disconnect the power supply assembly cables from the system board.

Removal steps

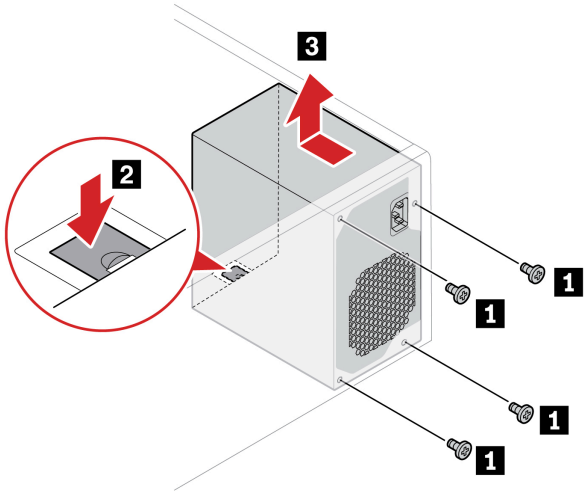

E-lock

Prerequisite

Before you start, read *Generic Safety and Compliance Notices*, and print the following instructions.

For access, do the following:

1. Remove the “Computer cover” on page 52.
2. Disconnect the E-lock cable from the system board.

Note: To remove the screws, you need a special tool (T15 star wrench).

Removal steps

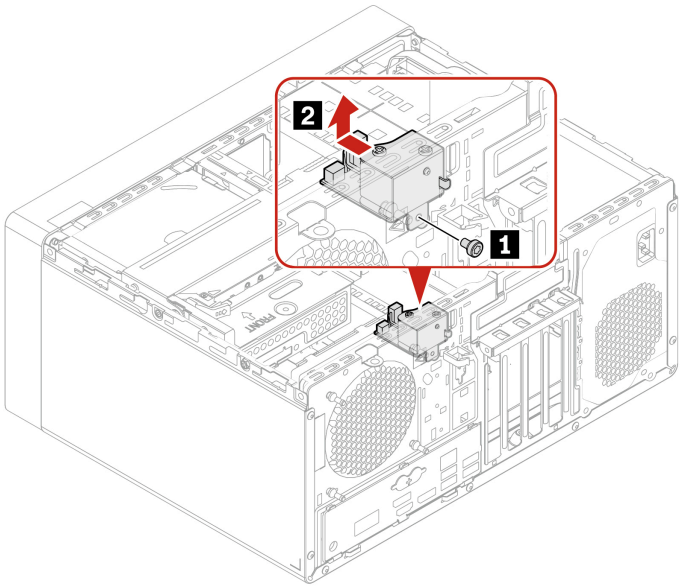

Front IO bracket, power button cable, and card reader

Prerequisite

Before you start, read *Generic Safety and Compliance Notices*, and print the following instructions.

For access, do the following:

1. Remove these parts in order, if any:
   - “Computer cover” on page 52
   - “Slim optical drive” on page 53
   - “Front bezel” on page 54
   - “Slim-optical-drive cage” on page 61
2. Disconnect the power button cable from the system board.
3. Disconnect the card reader cable from the card reader.

Replacement procedure

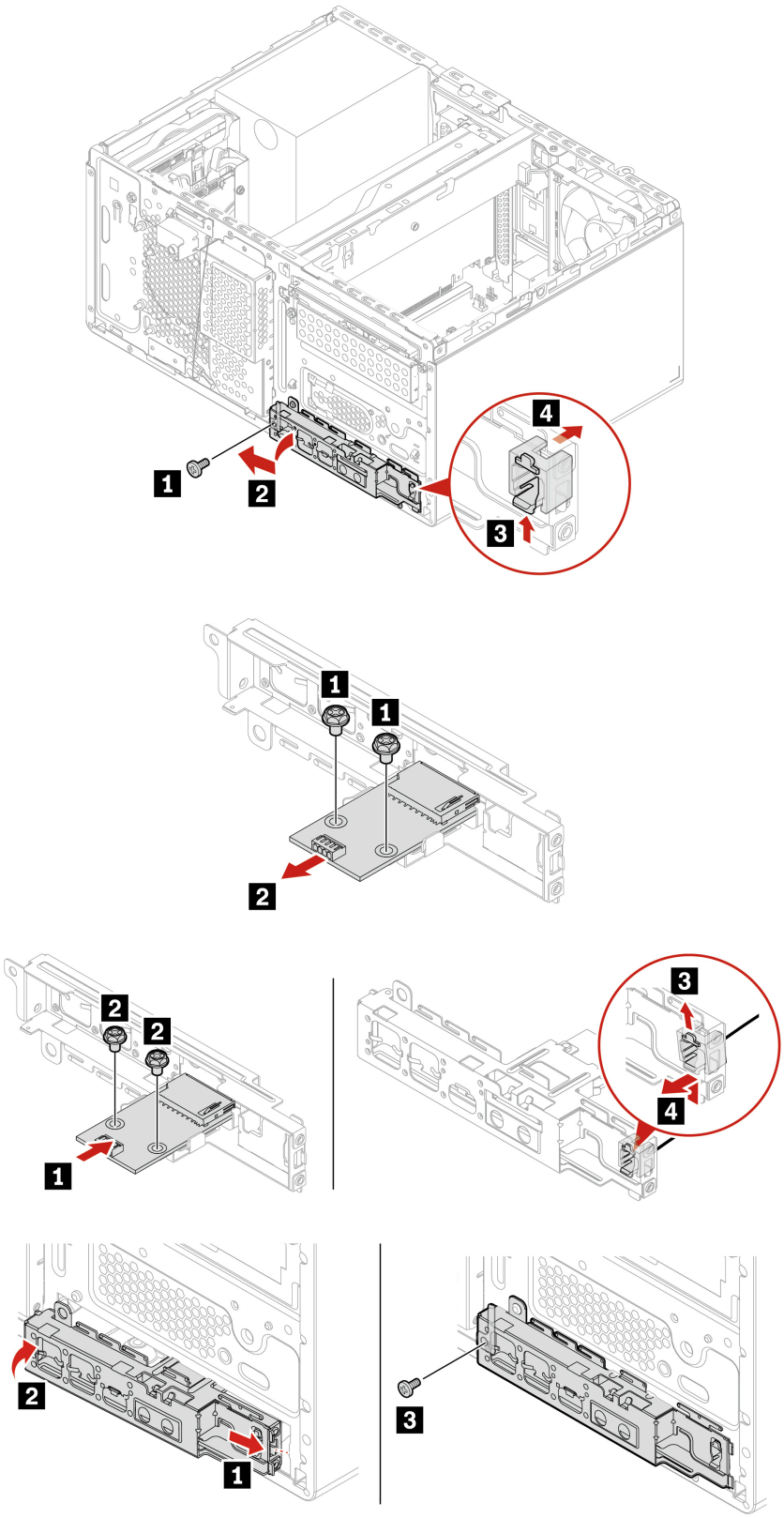

Flexible IO board

Prerequisite

Before you start, read *Generic Safety and Compliance Notices*, and print the following instructions.

For access, remove these parts in order, if any:

- “Computer cover” on page 52
- “E-lock” on page 89
- “Rear fan” on page 82
- Type-2 heat sink and fan assembly, if any. See “Heat-sink-and-fan assembly” on page 83

Removal steps

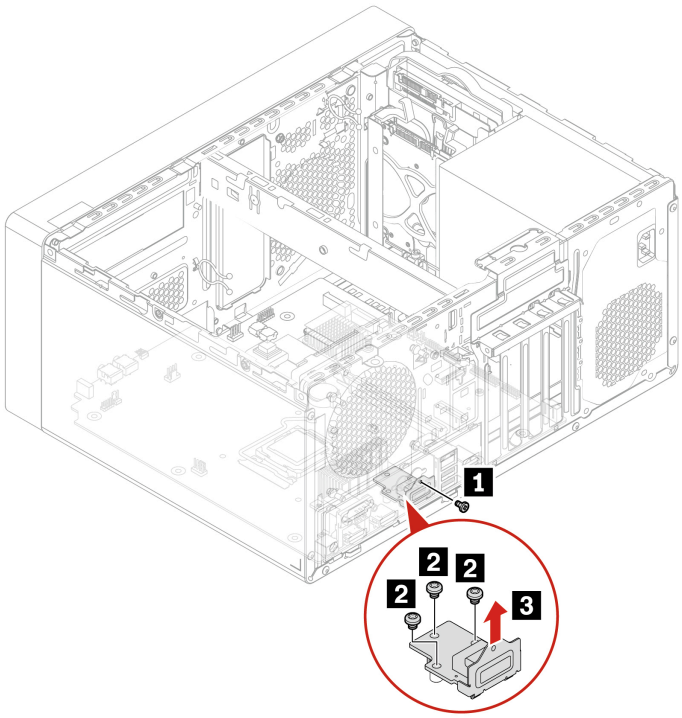

Internal speaker

Prerequisite

Before you start, read *Generic Safety and Compliance Notices*, and print the following instructions.

For access, do the following:

1. Remove these parts in order, if any:
   - “Computer cover” on page 52
   - “Slim optical drive” on page 53
   - “Front bezel” on page 54
   - “Slim-optical-drive cage” on page 61
2. Disconnect the internal speaker cable from the system board.

Removal steps

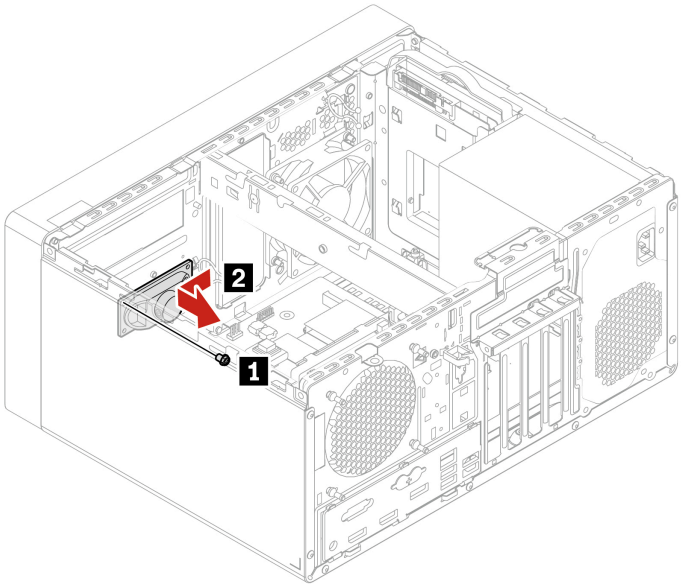

Wi-Fi card

Prerequisite

Before you start, read *Generic Safety and Compliance Notices*, and print the following instructions.

For access, remove “Computer cover” on page 52.

Removal steps

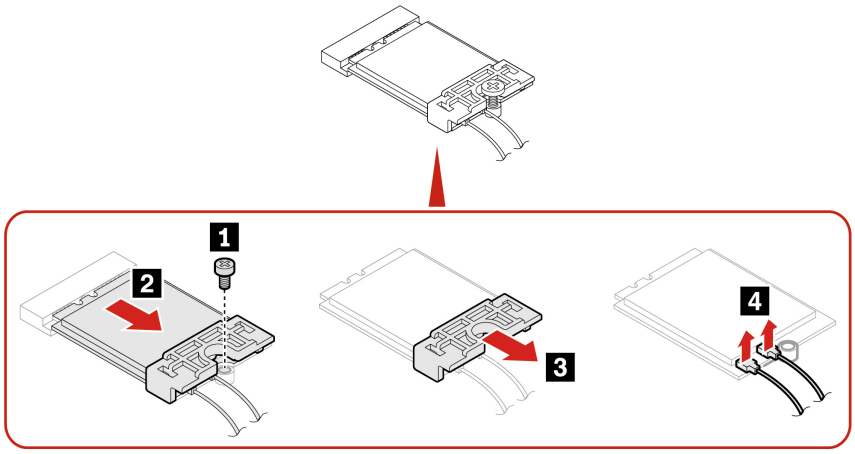

Note: During installation, ensure that you connect the gray cable to the connector labeled AUX on the card, and the black cable to the connector labeled MAIN.

Front Wi-Fi antenna

Prerequisite

Before you start, read *Generic Safety and Compliance Notices*, and print the following instructions.

For access, remove these parts in order, if any:
- “Computer cover” on page 52
- “Slim optical drive” on page 53
- “Front bezel” on page 54
- “Wi-Fi card” on page 93

Removal steps

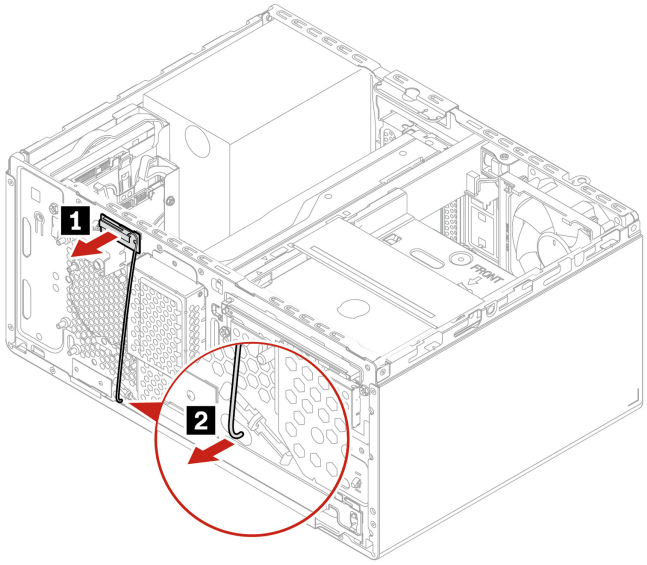

Rear Wi-Fi antenna

Prerequisite

Before you start, read *Generic Safety and Compliance Notices*, and print the following instructions.

For access, remove these parts in order if any:
- “Computer cover” on page 52
- “Wi-Fi card” on page 93

Replacement procedure

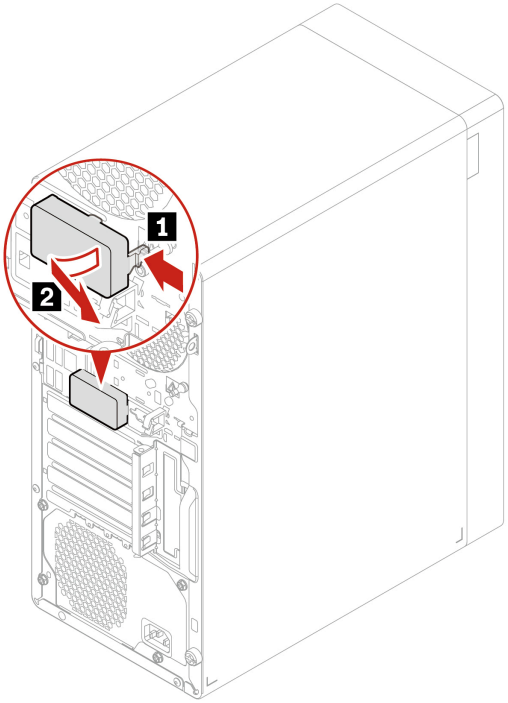

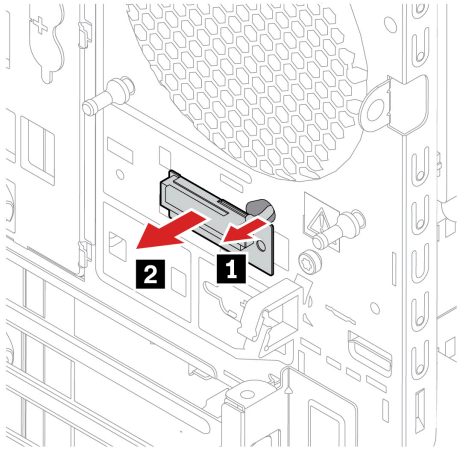

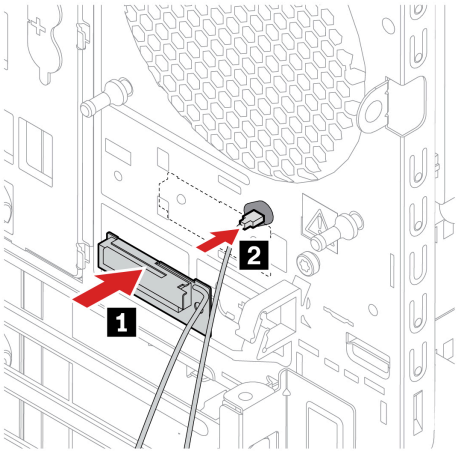

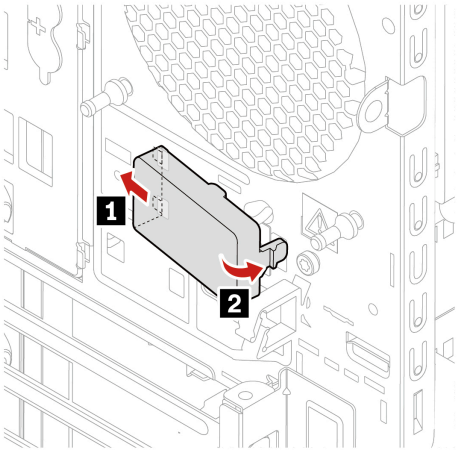

ThinkStation LED

Prerequisite

Before you start, read *Generic Safety and Compliance Notices*, and print the following instructions.

For access, do the following:

1. Remove these parts in order if any:
   - “Computer cover” on page 52
   - “Slim optical drive” on page 53
   - “Front bezel” on page 54
2. Disconnect the ThinkStation LED cable from the system board.

Removal steps

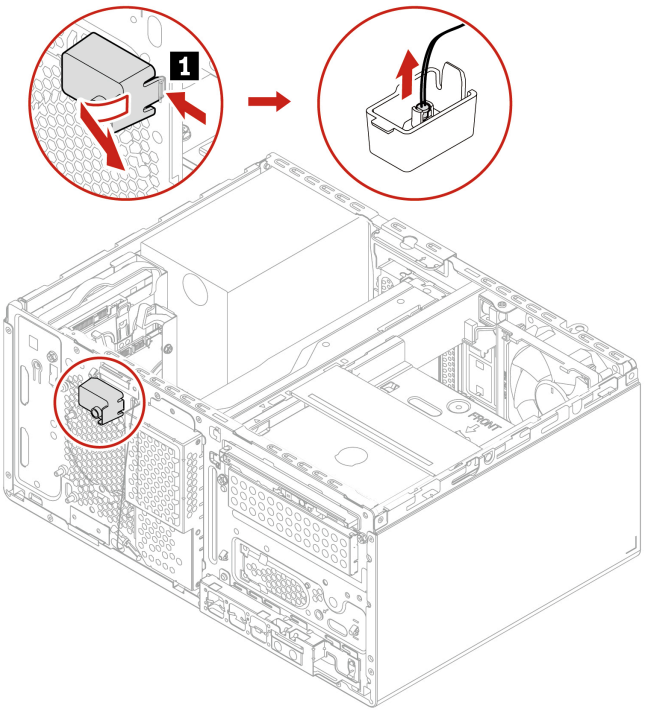

Thermal sensor

Prerequisite

Before you start, read *Generic Safety and Compliance Notices*, and print the following instructions.

For access, do the following:

1. Remove these parts in order if any:
   - “Computer cover” on page 52
   - “Slim optical drive” on page 53
   - “Front bezel” on page 54
   - “Front fan” on page 81
2. Disconnect the thermal sensor cable from the system board.

Removal steps

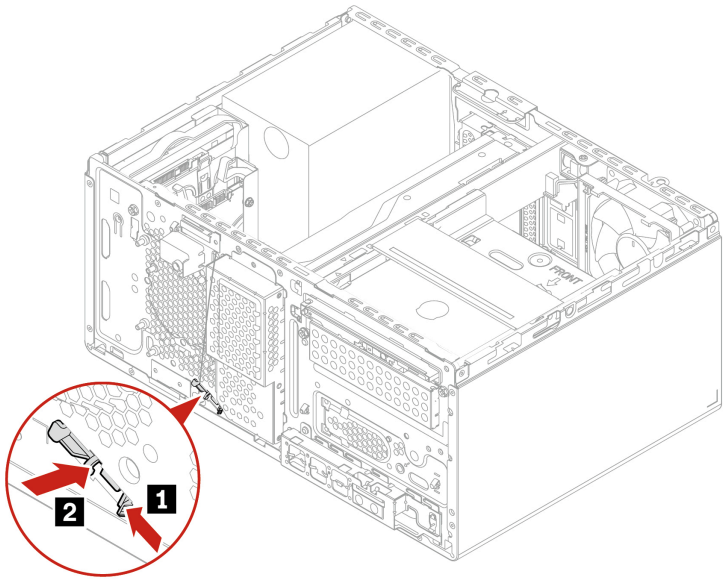

Cover presence switch cable and bracket

Prerequisite

Before you start, read *Generic Safety and Compliance Notices*, and print the following instructions.

For access, do the following:

1. Remove “Computer cover” on page 52.
2. Disconnect the cover presence switch cable from the system board.

Removal steps

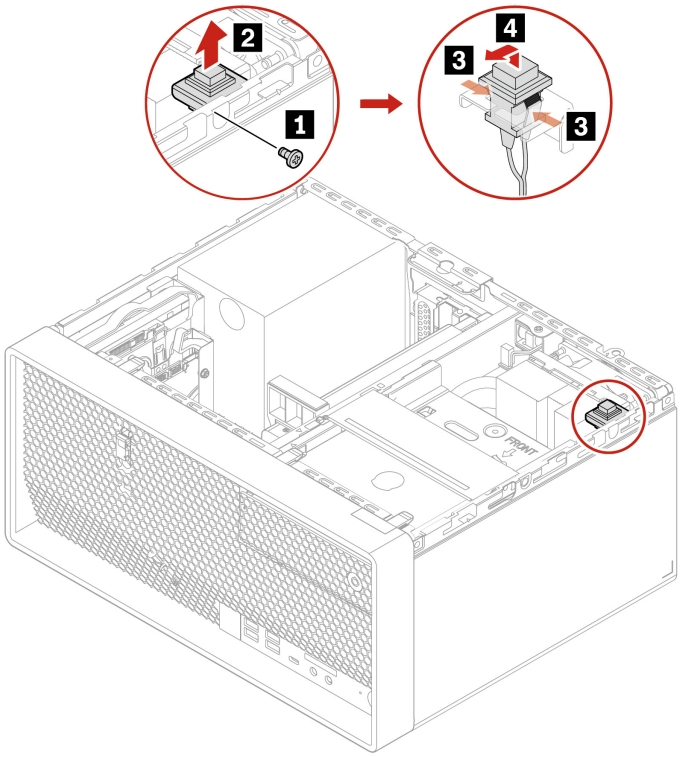

Microprocessor

Prerequisite

Before you start, read *Generic Safety and Compliance Notices*, and print the following instructions.



The heat sink and microprocessor might be very hot. Before you open the computer cover, turn off the computer and wait several minutes until the computer is cool.

For access, remove these parts in order, if any:

- “Computer cover” on page 52
- “Slim optical drive” on page 53
- “Front bezel” on page 54
- “Slim-optical-drive cage” on page 61
- “Heat-sink-and-fan assembly” on page 83

Notes:

- Touch only the edges of the microprocessor. Do not touch the gold contacts on the bottom.
- Do not drop anything onto the microprocessor socket while it is exposed. The socket pins must be kept as clean as possible.

Removal steps

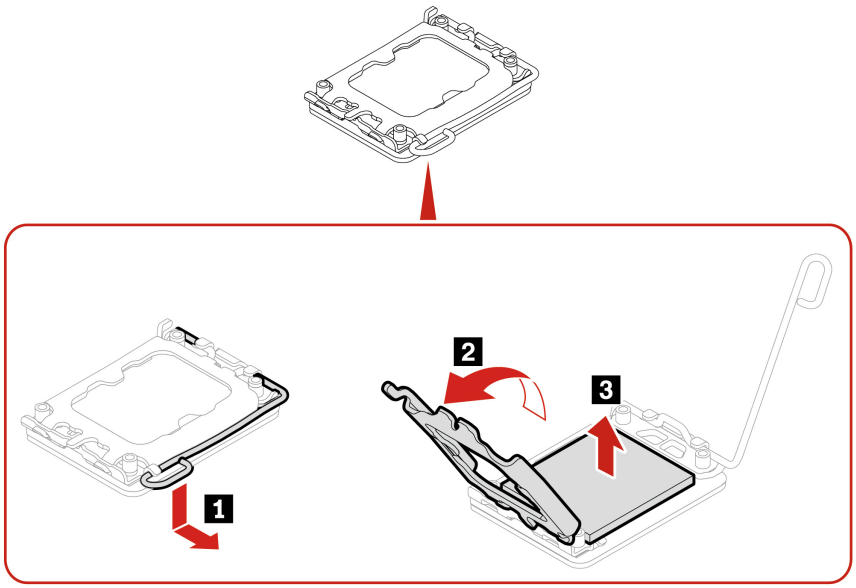

System board

Prerequisite

Before you start, read *Generic Safety and Compliance Notices*, and print the following instructions.



The heat sink and microprocessor might be very hot. Before you open the computer cover, turn off the computer and wait several minutes until the computer is cool.

Notes:

- Your microprocessor sockets and socket covers might look slightly different from the illustrations in this topic.
- Do not touch the pins on the microprocessor socket or the gold contacts on the microprocessor.

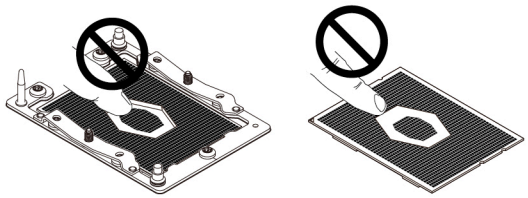

For access, do the following:

1. Remove these parts in order, if any:
   - “Computer cover” on page 52
   - “Slim optical drive” on page 53
   - “Front bezel” on page 54
   - “Primary storage drives” on page 55
   - “PCI-Express card” on page 69
   - “Graphics card fan” on page 71

- “Graphics card holder” on page 72
- “Graphics card” on page 73
- “M.2 solid-state drive and heat sink” on page 76
- “Slim-optical-drive cage” on page 61
- “Front fan” on page 81
- “Rear fan” on page 82
- “Heat-sink-and-fan assembly” on page 83
- “Chassis beam” on page 86
- “Memory module” on page 87
- “E-lock” on page 89
- “Front IO bracket, power button cable, and card reader” on page 90
- “Internal speaker” on page 92
- “Wi-Fi card” on page 93
- “Cover presence switch cable and bracket” on page 98
- “Microprocessor” on page 99

2. Record the cable routing and cable connections, and then disconnect all cables from the system board. See “System board” on page 49.

Removal steps

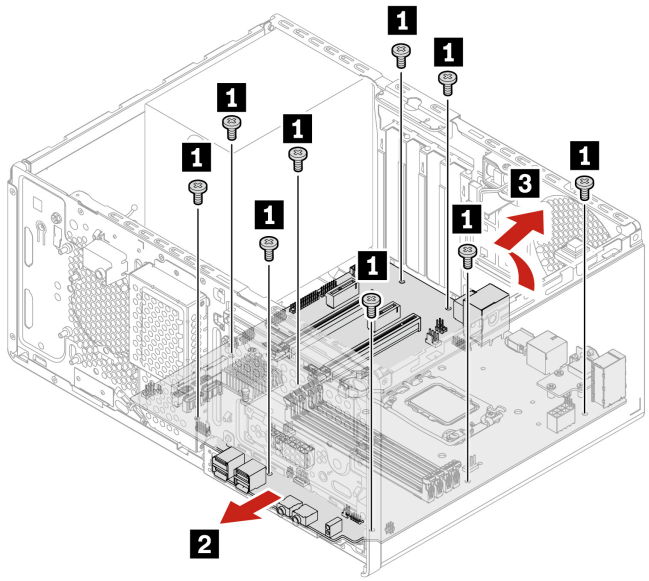

Notes:

- Ensure that a new VRM heat sink is installed when you install the system board. If the new system board does not come with a VRM heat sink, see “VRM heat sink” on page 102 to install one first.
- The failing system board must be returned with a microprocessor socket cover to protect the pins during shipping and handling.

Microprocessor socket cover installation procedure

1. After you have removed the microprocessor from the failing system board, close the microprocessor retainer. Then, put the lever to the locked position to secure the retainer in place.
2. Note the orientation of the socket cover, and install one side of the socket cover into the microprocessor socket. Carefully press the other side of the socket cover downward until the socket cover snaps into position.

   Note: The microprocessor socket cover might look slightly different from the illustration.

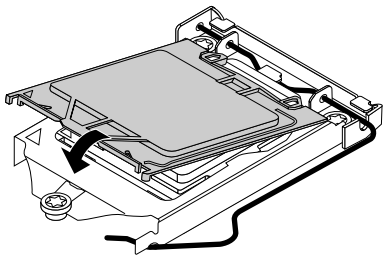

3. Carefully check the four corners of the socket cover to ensure that the cover is seated securely.
4. Follow any additional instructions that are included with the replacement part you received.

VRM heat sink

Prerequisite

Before you start, read *Generic Safety and Compliance Notices*, and print the following instructions.



The heat sink and microprocessor might be very hot. Before you open the computer cover, turn off the computer and wait several minutes until the computer is cool.

For access, do the following:

1. Remove these parts in order, if any:
   - “Computer cover” on page 52
   - “Slim optical drive” on page 53
   - “Front bezel” on page 54
   - “Primary storage drives” on page 55
   - “PCI-Express card” on page 69
   - “Graphics card fan” on page 71
   - “Graphics card holder” on page 72
   - “Graphics card” on page 73
   - “M.2 solid-state drive and heat sink” on page 76
   - “Slim-optical-drive cage” on page 61
   - “Front fan” on page 81
   - “Rear fan” on page 82
   - “Heat-sink-and-fan assembly” on page 83
   - “Chassis beam” on page 86
   - “Memory module” on page 87
   - “E-lock” on page 89
   - “Front IO bracket, power button cable, and card reader” on page 90
   - “Internal speaker” on page 92
   - “Wi-Fi card” on page 93
   - “Cover presence switch cable and bracket” on page 98
   - “Microprocessor” on page 99
   - “System board” on page 49
2. Turn over the system board.

Replacement procedure

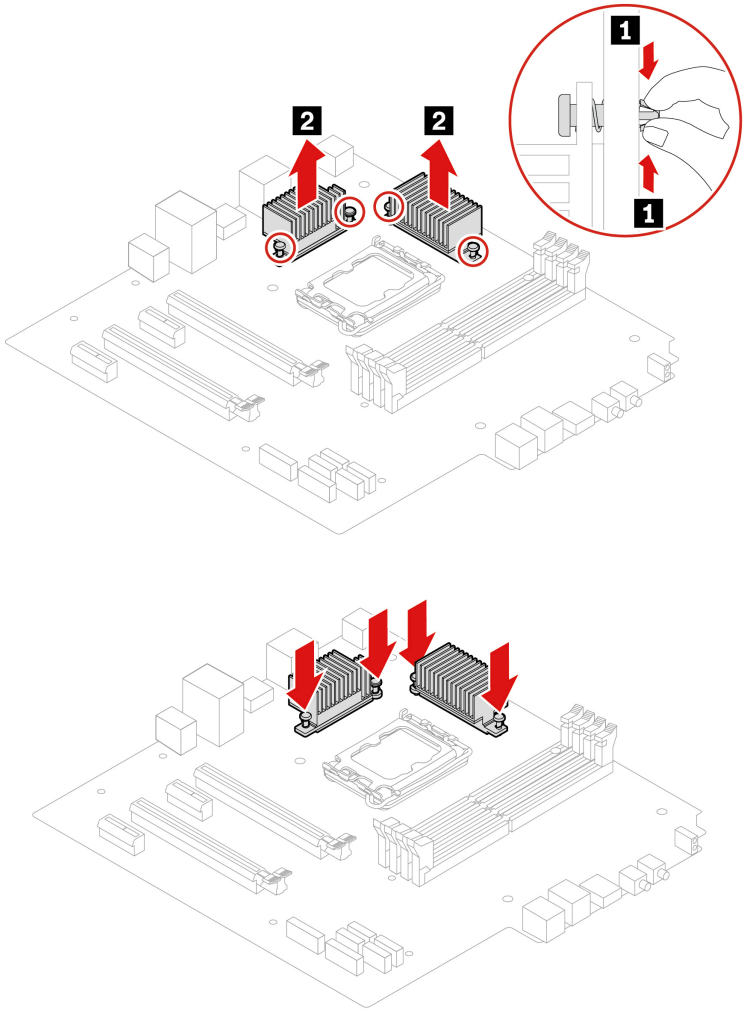

Chapter 8. Notices and trademarks

Notices

Lenovo may not offer the products, services, or features discussed in this document in all countries. Consult your local Lenovo representative for information on the products and services currently available in your area. Any reference to a Lenovo product, program, or service is not intended to state or imply that only that Lenovo product, program, or service may be used. Any functionally equivalent product, program, or service that does not infringe any Lenovo intellectual property right may be used instead. However, it is the user's responsibility to evaluate and verify the operation of any other product, program, or service.

Lenovo may have patents or pending patent programs covering subject matter described in this document. The furnishing of this document does not give you any license to these patents. You can send license inquiries, in writing, to:

Lenovo (United States), Inc.
8001 Development Drive
Morrisville, NC 27560
U.S.A.
Attention: Lenovo Director of Licensing

LENOVO PROVIDES THIS PUBLICATION "AS IS" WITHOUT WARRANTY OF ANY KIND, EITHER EXPRESS OR IMPLIED, INCLUDING, BUT NOT LIMITED TO, THE IMPLIED WARRANTIES OF NON-INFRINGEMENT, MERCHANTABILITY OR FITNESS FOR A PARTICULAR PURPOSE. Some jurisdictions do not allow disclaimer of express or implied warranties in certain transactions, therefore, this statement may not apply to you.

Changes are made periodically to the information herein; these changes will be incorporated in new editions of the publication. To provide better service, Lenovo reserves the right to improve and/or modify the products and software programs described in the manuals included with your computer, and the content of the manual, at any time without additional notice.

The software interface and function and hardware configuration described in the manuals included with your computer might not match exactly the actual configuration of the computer that you purchase. For the configuration of the product, refer to the related contract (if any) or product packing list, or consult the distributor for the product sales. Lenovo may use or distribute any of the information you supply in any way it believes appropriate without incurring any obligation to you.

The products described in this document are not intended for use in implantation or other life support applications where malfunction may result in injury or death to persons. The information contained in this document does not affect or change Lenovo product specifications or warranties. Nothing in this document shall operate as an express or implied license or indemnity under the intellectual property rights of Lenovo or third parties. All information contained in this document was obtained in specific environments and is presented as an illustration. The result obtained in other operating environments may vary.

Lenovo may use or distribute any of the information you supply in any way it believes appropriate without incurring any obligation to you.

Any references in this publication to non-Lenovo Web sites are provided for convenience only and do not in any manner serve as an endorsement of those Web sites. The materials at those Web sites are not part of the materials for this Lenovo product, and use of those Web sites is at your own risk.

Any performance data contained herein was determined in a controlled environment. Therefore, the result obtained in other operating environments may vary significantly. Some measurements may have been made

© Copyright Lenovo 2022, 2025

on development-level systems and there is no guarantee that these measurements will be the same on generally available systems. Furthermore, some measurements may have been estimated through extrapolation. Actual results may vary. Users of this document should verify the applicable data for their specific environment.

This document is copyrighted by Lenovo and is not covered by any open source license, including any Linux agreement(s) which may accompany software included with this product. Lenovo may update this document at any time without notice.

For the latest information or any questions or comments, contact or visit the Lenovo Web site:
https://pcsupport.lenovo.com

Trademarks

LENOVO, LENOVO logo, THINKSTATION, and THINKSTATION logo are trademarks of Lenovo. Intel, Optane, Core, and Thunderbolt are trademarks of Intel Corporation or its subsidiaries in the U.S. and/or other countries. Microsoft, Windows, and Cortana are trademarks of the Microsoft group of companies. DisplayPort is a trademark of the Video Electronics Standards Association. The terms HDMI and HDMI High-Definition Multimedia Interface are trademarks or registered trademarks of HDMI Licensing LLC in the United States and other countries. Wi-Fi and Miracast are registered trademarks of Wi-Fi Alliance. USB-C is a registered trademark of USB Implementers Forum. All other trademarks are the property of their respective owners.


Lenovo