T14 Gen 1, T15 Gen 1, P14s Gen 1, and P15s Gen 1
User Guide



Read this first

Before using this documentation and the product it supports, ensure that you read and understand the following:

- *Safety and Warranty Guide*
- *Setup Guide*
- *Generic Safety and Compliance Notices*

Third Edition (July 2022)

© Copyright Lenovo 2020, 2022.

LIMITED AND RESTRICTED RIGHTS NOTICE: If data or software is delivered pursuant to a General Services Administration “GSA” contract, use, reproduction, or disclosure is subject to restrictions set forth in Contract No. GS-35F-05925.

Contents

About this documentation iii

Chapter 1. Meet your computer 1

Front 1
Base 2
Left 4
Right 6
Rear 6
Bottom 7

Chapter 2. Get started with your computer 9

Get started with your desktop 9
Manage networks 9
Connect to Wi-Fi networks 9
Airplane mode 10
Interact with your computer 10
Use the camera 10
Use the keyboard shortcuts 10
Use the TrackPoint pointing device 11
Use the trackpad 12
Use the multi-touch screen 13
Connect to an external display 14

Chapter 3. Explore your computer . . 17

Use the Intelligent Cooling feature 17
Use the P-to-P 2.0 charging function 17
Connect to a Bluetooth-enabled device 18
Enabling Nvidia proprietary drivers in Fedora (for selected models) 18
Accessories 18
Purchase options 19
Docking station 19

Chapter 4. Secure your computer and information 25

Lock the computer 25
Use the fingerprint reader (for selected models) . . 25
Use privacy protection (for selected models) . . . 26
Use passwords 26
Password types 26
Set, change, and remove a password 28
Use Power Loss Protection function (for selected models) 29

Chapter 5. Configure advanced settings 31

UEFI BIOS 31
What is UEFI BIOS 31
Enter the UEFI BIOS menu 31
Navigate in the UEFI BIOS interface 31
Change the startup sequence 31
Set the system date and time 32
Update UEFI BIOS 32

Chapter 6. CRU replacement 33

CRU list 33
Disable the built-in battery 33
Replace a CRU 34
Base cover assembly (T14 Gen 1 and P14s Gen 1) 34
Base cover assembly (T15 Gen 1 and P15s Gen 1) 36
Memory module (for selected models) 38
M.2 solid-state drive 39
Wireless WAN card (for selected models) . . . 42
Keyboard 45
Speaker assembly 51
Always On USB 3.2 connector Gen 1 board . . 53

Chapter 7. Help and support 55

Frequently asked questions 55
Error messages 56
Beep errors 57
Self-help resources 58
Call Lenovo 59
Before you contact Lenovo 59
Lenovo Customer Support Center 60
Purchase additional services 61

Appendix A. Compliance information 63

Appendix B. Notices and trademarks 67

© Copyright Lenovo 2020, 2022

About this documentation

- Illustrations in this documentation might look different from your product.
- Depending on the model, some optional accessories, features, software programs, and user interface instructions might not be applicable to your computer.
- Documentation content is subject to change without notice. To get the latest documentation, go to https://pcsupport.lenovo.com.

© Copyright Lenovo 2020, 2022

Chapter 1. Meet your computer

Front

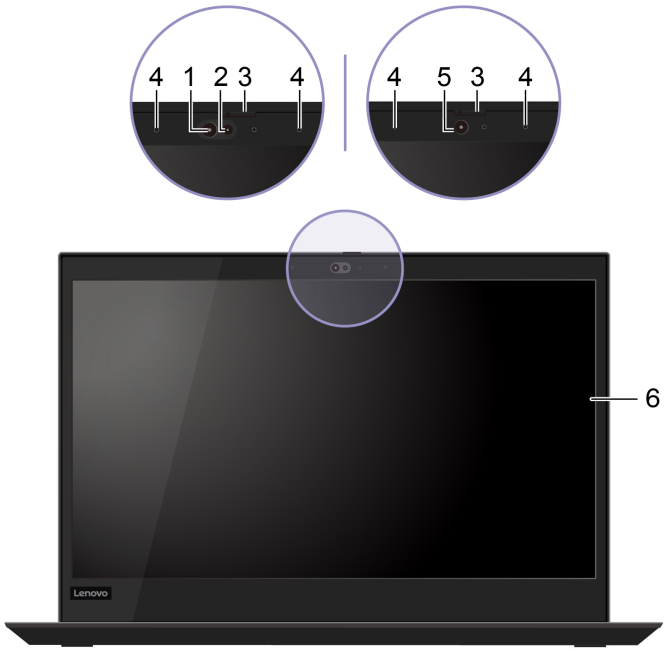

Item	Description	Item	Description
1.	Infrared LED*	2.	Camera with IR function*
3.	ThinkShutter*	4.	Microphones*
5.	Camera*	6.	Multi-touch screen

* for selected models

ThinkShutter: Slide ThinkShutter to cover or uncover the camera lens. It is designed to protect your privacy.

© Copyright Lenovo 2020, 2022

Base

T14 Gen 1 (for models without RFID) and P14s Gen 1



T14 Gen 1 (for models with RFID)



T15 Gen 1 and P15s Gen 1

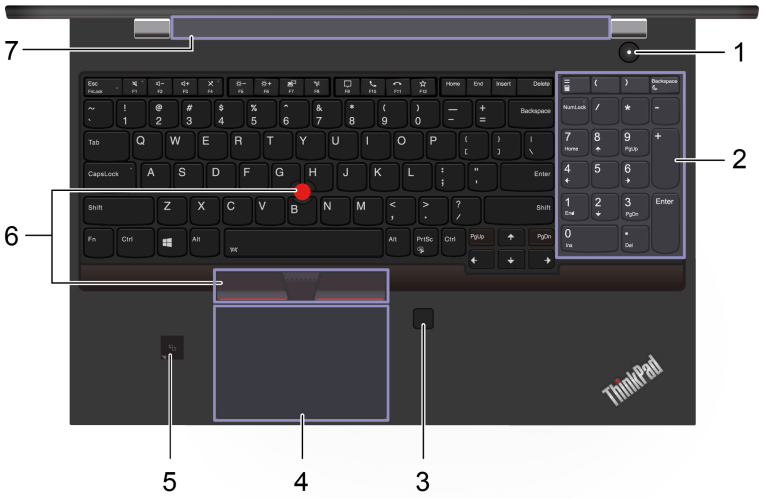

Item	Description	Item	Description
1.	Power button	2.	Numeric keypad
3.	Fingerprint reader*	4.	Trackpad
5.	NFC label (for selected Intel models)	6.	TrackPoint® pointing device
7.	Speakers	8.	RFID label

* for selected models

Left

Intel models

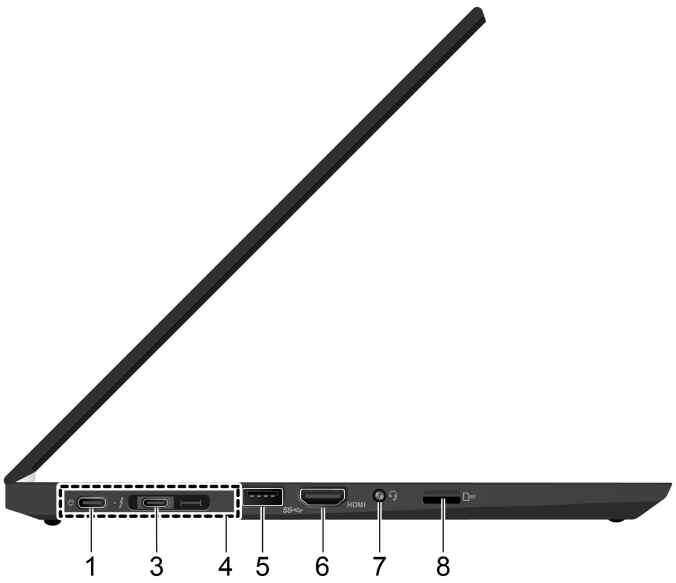

AMD models

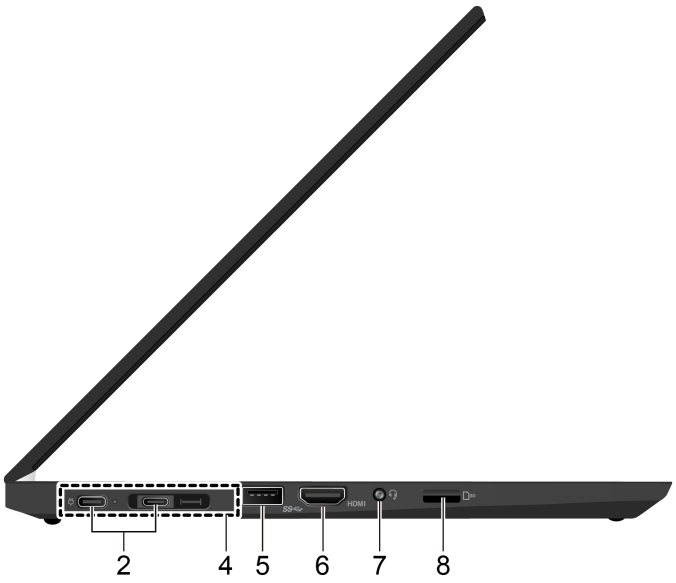

Item	Description	Item	Description
1.	USB-C™ (3.2 Gen 1) connector (for Intel models)	2.	USB-C (3.2 Gen 2) connector (for AMD models)
3.	Thunderbolt™ 3 connector (USB-C) (for Intel models)	4.	Docking-station connector
5.	USB 3.2 connector Gen 1	6.	HDMI™ connector
7.	Audio connector	8.	microSD card slot

Right

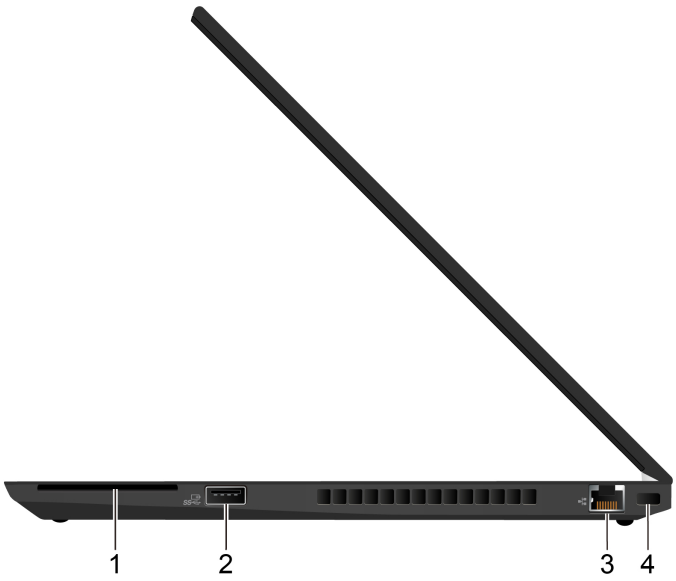

Item	Description	Item	Description
1.	Smart-card slot*	2.	Always On USB 3.2 connector Gen 1
3.	Ethernet connector	4.	Security-lock slot

* for selected models

Rear

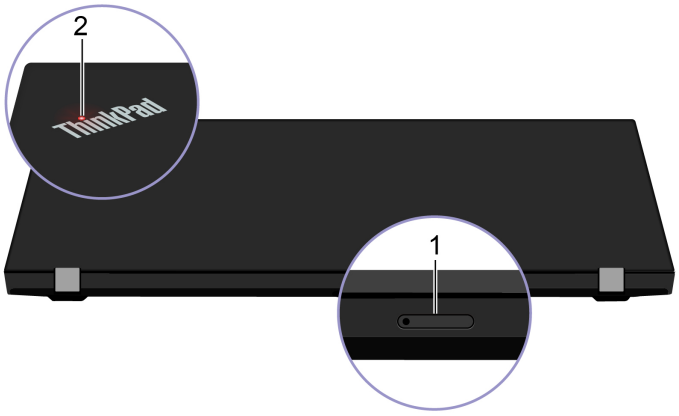

Item	Description	Item	Description
1.	Nano-SIM-card tray*	2.	System status indicator

* for selected models

Bottom

T14 Gen 1 and P14s Gen 1

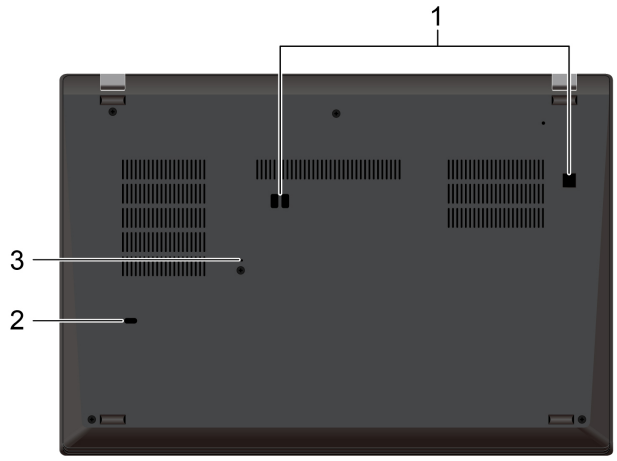

T15 Gen 1 and P15s Gen 1

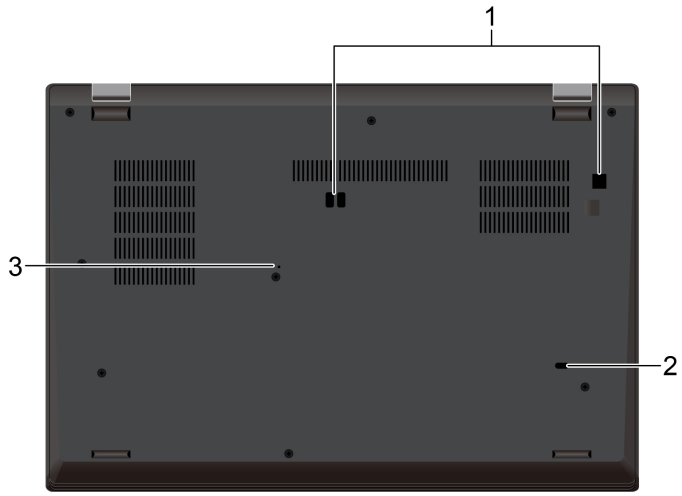

Item	Description	Item	Description
1.	Docking-station hook holes	2.	Keyboard drainage hole
3.	Emergency-reset hole		

Emergency-reset hole

If the computer stops responding and you cannot turn it off by pressing the power button, reset your computer:

1. Disconnect your computer from ac power.
2. Insert a straightened paper clip into the hole to cut off power supply temporarily.
3. Connect your computer to ac power and then turn on your computer.

Chapter 2. Get started with your computer

Get started with your desktop

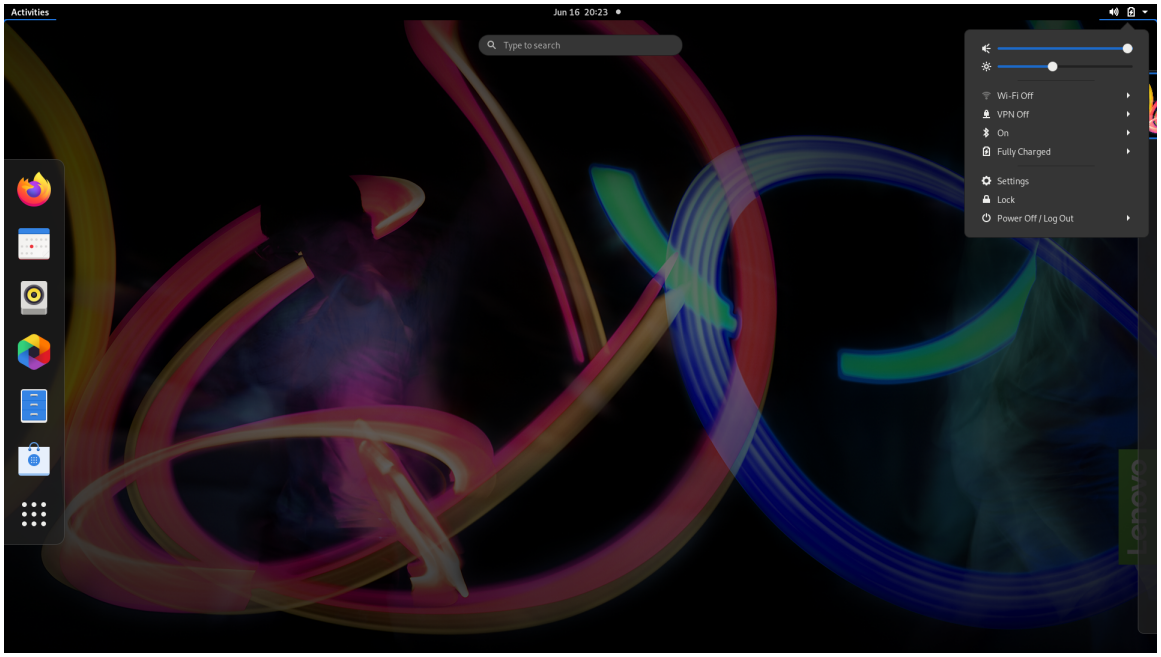

Launch an app

- Use the super key (with the Windows logo) or open the Activities menu on the top left and type in the name of the application you want to launch.
- Click the "show application" menu (For the Fedora operating system, you can see the menu after opening Activities menu) on the lower left and type in the name of the application you want to launch.

Launch settings

Select the system menu arrow on the top right and click on **Settings**.

Get support

- For the Ubuntu operating system, see the Ubuntu documentation site at https://help.ubuntu.com/lts/ubuntu-help/index.html.
- For the Fedora operating system, see the Fedora project wiki at https://fedoraproject.org/wiki/Fedora_Project_Wiki.
- The Gnome desktop is installed by default and is designed to be simple and easy to use. Details on using Gnome are available by launching the Help application or online at https://help.gnome.org/users/.

Manage networks

Your computer helps you connect to the world through a wired or wireless network.

Connect to Wi-Fi networks

1. Click the system menu arrow on the top right. A list of available wireless networks is displayed.

© Copyright Lenovo 2020, 2022

2. Select a network available for connection. Provide required information, if needed.

Airplane mode

When the Airplane mode is enabled, all wireless features are disabled.

To enable or disable the Airplane mode:

1. Use the system menu drop down (top right) and choose **Settings**.
2. Click the Wi-Fi option.
3. Turn on or turn off the **Airplane mode** switch.

Interact with your computer

Your computer provides you various ways to navigate the screen.

Use the camera

- Take pictures or record videos by using the **Cheese** application. The indicator next to the camera is on when the camera is in use.
- If you use other apps that support photographing, video chatting, and video conference, the camera starts automatically when you enable the camera-required feature from the app.

Note: IR camera support is currently limited in Linux. Make sure the regular camera is selected if you see gray lines.

Use the keyboard shortcuts

The special keys on the keyboard help you work more easily and effectively.

	Enable / disable speakers
	Decrease volume
	Increase volume
	Enable / disable microphones
	Darken display
	Brighten display
	Manage external displays
	Enable / disable wireless
*	Open Settings window
*	Enable / disable Bluetooth

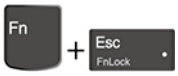	Invoke the special function printed as an icon on each key or standard function of F1–F12 function keys. FnLock indicator on: standard function FnLock indicator off: special function
Fn+Spacebar	Toggle keyboard backlight
Fn+B	Break operation
Fn+K	Scroll contents
Fn+P	Pause operation
Fn+S	Send system request
Fn+4	Enter sleep mode To wake up the computer, press Fn or the power button.
Fn+Left arrow key	Go to beginning
Fn+Right arrow key	Go to end

* for selected models

Use the TrackPoint pointing device

The TrackPoint pointing device enables you to perform all the functions of a traditional mouse, such as pointing, clicking, and scrolling.

Use the TrackPoint pointing device

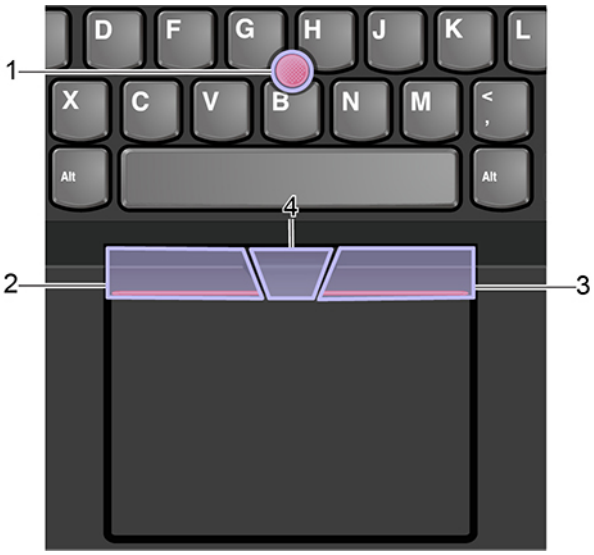

1. **Pointing stick**

Use your index finger or middle finger to apply pressure to the pointing-stick nonslip cap in any direction parallel to the keyboard. The pointer on the screen moves accordingly but the pointing stick itself does not move. The higher the pressure applied, the faster the pointer moves.

2. **Left-click button**

Press to select or open an item.

3. **Right-click button**

Press to display a shortcut menu.

4. **Middle button**

Press and hold the dotted middle button while applying pressure to the pointing stick in the vertical or horizontal direction. Then, you can scroll through the document, Web site, or apps.

Replace the pointing-stick nonslip cap

Note: Ensure that the new cap has grooves **a**.



Use the trackpad

The entire trackpad surface is sensitive to finger touch and movement. You can use the trackpad to perform all the pointing, clicking, and scrolling functions of a traditional mouse.

Use the touch gestures

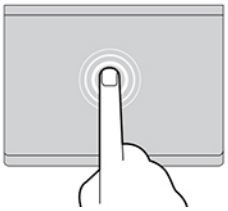

Tap

Tap anywhere on the trackpad with one finger to select or open an item.

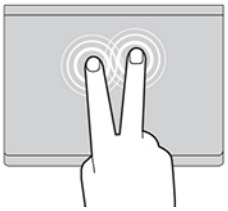

Two-finger tap

Tap anywhere on the trackpad with two fingers to display a shortcut menu.

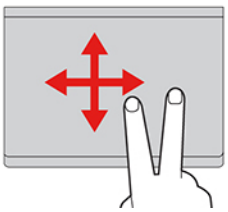

Two-finger scroll

Put two fingers on the trackpad and move them in the vertical or horizontal direction. This action enables you to scroll through the document, Web site, or apps.

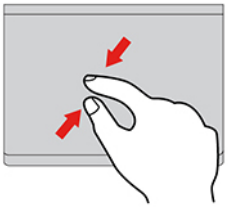

Two-finger zoom out

Put two fingers on the trackpad and move them closer together to zoom out.

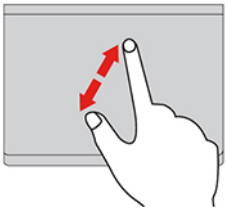

Two-finger zoom in

Put two fingers on the trackpad and move them farther apart to zoom in.

Notes:
- When using two or more fingers, ensure that you position your fingers slightly apart.
- Some gestures are not available if the last action was done from the TrackPoint pointing device.
- Some gestures are only available when you are using certain apps.
- If the trackpad surface is stained with oil, turn off the computer first. Then, gently wipe the trackpad surface with a soft and lint-free cloth moistened with lukewarm water or computer cleaner.

For more gestures, see the help information of the pointing device.

Use the multi-touch screen

If your computer display supports the multi-touch function, you can navigate the screen with simple touch gestures.

Note: Some gestures might not be available depending on the app you use.

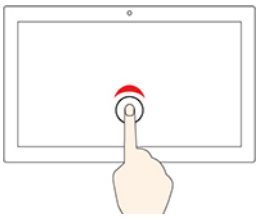

Tap once

- From the **Start** menu: Open an app or item.
- From the desktop: Select an app or item.
- In an open app: Perform an action such as **Copy**, **Save**, and **Delete**, depending on the app.

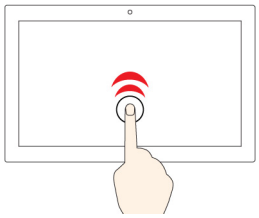

Tap twice quickly

Open an app or item from the desktop.

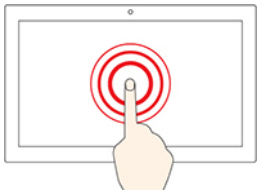

Tap and hold

Open a shortcut menu.

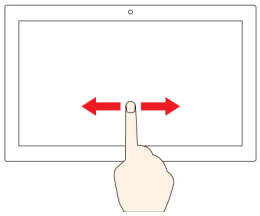

Slide

Scroll through items, such as lists, pages, and photos.

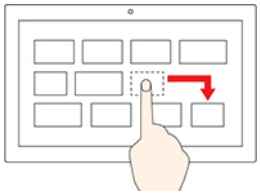

Drag an item to the location you want

Move an object.

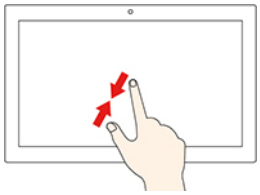

Move two fingers closer together

Zoom out.

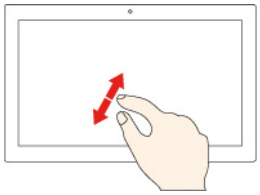

Move two fingers farther apart

Zoom in.

Tips

- Turn off the computer before cleaning the multi-touch screen.
- Use a dry, soft, and lint-free cloth or a piece of absorbent cotton to remove fingerprints or dust from the multi-touch screen. Do not apply solvents to the cloth.
- The multi-touch screen is a glass panel covered with a plastic film. Do not apply pressure or place any metallic object on the screen, which might damage the touch panel or cause it to malfunction.
- Do not use fingernails, gloved fingers, or inanimate objects for input on the screen.
- Regularly calibrate the accuracy of the finger input to avoid a discrepancy.

Connect to an external display

Connect your computer to a projector or a monitor to give presentations or expand your workspace.

Connect to a wired display

1. Connect the external display to an appropriate video connector on your computer.
2. Connect the external display to an electrical outlet.
3. Turn on the external display.

If your computer cannot detect the external display, right-click a blank area on the desktop, and then click **Display settings**.

Set the display mode

Press  or  +  and then select a display mode of your preference.

Change display settings

1. Right-click a blank area on the desktop and select **Display settings**.
2. Select the display that you want to configure.
3. Change display settings of your preference.

You can change the settings for both the computer display and the external display. For example, you can define which one is the main display and which one is the secondary display. You also can change the resolution and orientation.

Note: If you set a higher resolution for the computer display than the external display, only part of the screen can be displayed on the external display.

Chapter 3. Explore your computer

Use the Intelligent Cooling feature

The Intelligent Cooling feature enables your computer to work in the following three modes:

- Quiet mode: the quietest fan noise
- Balanced mode: balanced performance and fan noise
- Performance mode: the highest performance and normal fan noise

Do the following to switch to the preferred mode:

- Press Fn+L to switch to quiet mode.
- Press Fn+M to switch to balanced mode.
- Press Fn+H to switch to performance mode.

Use the P-to-P 2.0 charging function

The USB-C connector on the computer features the Lenovo-unique P-to-P 2.0 charging function. When no ac power is available, this feature enables one computer to supply power to another computer through a USB-C to USB-C cable. When ac power is available for only one computer, this feature enables both computers to get charged by ac power.

Before using the function, ensure that:

- The selected connectors support the P-to-P 2.0 charging function and power delivery function.
- **Always On USB** and **Charge in Battery Mode** are enabled in UEFI BIOS of both computers, so that the function works even when the computers are off or in hibernation mode. To enable **Always On USB** and **Charge in Battery Mode**:
  1. Enter the UEFI BIOS menu. See “Enter the UEFI BIOS menu” on page 31.
  2. Click **Config → USB** to enable **Always On USB** and **Charge in Battery Mode**.

To use the function:

- **When no ac power is available:**

  The remaining battery power of computer A should be at least 30% and be 3% higher than that of computer B. Connect the computers to each other with a USB-C to USB-C cable. In this situation, computer A works as the power supply. Once the remaining battery power of computer A is lower than 30%, computer A stops supplying power to computer B.

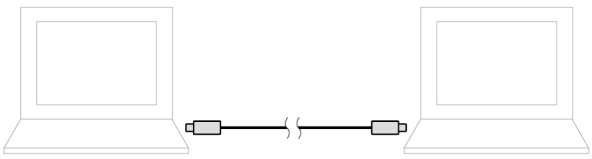

- **When ac power is available:**

  Connect the computers to each other with a USB-C to USB-C cable. Connect one computer to ac power. In this situation, ac power works as the power supply and both computers get charged.

© Copyright Lenovo 2020, 2022

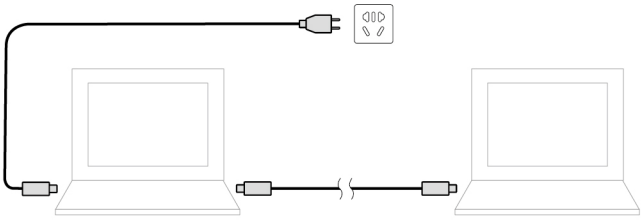

Note: The actual charging speed using the Lenovo-unique P-to-P 2.0 charging function varies depending on many factors, such as the remaining battery power of the computers, the wattage of the ac power adapter, and whether you are using the computers.

Connect to a Bluetooth-enabled device

You can connect all types of Bluetooth-enabled devices to your computer, such as a keyboard, a mouse, a smartphone, or speakers. To ensure the connection is successful, place the devices 10 meters (33 feet), at most, from the computer.

1. Turn on Bluetooth on the computer.
   - Click the system menu drop down (top right) and choose **Settings**.
   - Choose the Bluetooth menu and enable Bluetooth with the toggle button at the top.
2. Any discoverable devices will be shown in the **Devices** list.
3. Select a Bluetooth device, and then follow the on-screen instructions.

Your Bluetooth-enabled device and computer will automatically connect the next time if the two devices are in range of each other with Bluetooth turned on. You can use Bluetooth for data transfer or remote control and communication.

Enabling Nvidia proprietary drivers in Fedora (for selected models)

The Nvidia proprietary drivers that will enable you to take advantage of performance benefits and new graphics functionality are not installed by default with Fedora.

To enable the proprietary drivers:

1. Launch the **Software** utility.
2. Enable third party repositories.
3. From the top right selection box choose **Software Repositories**.
4. Enable **RPM Fusion for Fedora → Nonfree → Nvidia Driver** and close the Software Repositories window.
5. Select **Add-ons** on the bottom right and choose the **Hardware Drivers** tab.
6. Select **NVIDIA Linux Graphics Driver**.
7. Select **Install** and wait for the installation to complete. This can take a few minutes.
8. Reboot and confirm Nvidia drivers are running using the **nvidia-settings** utility.

Accessories

This chapter provides instructions on how to use hardware accessories to expand your computer capabilities.

Purchase options

Lenovo has a number of hardware accessories and upgrades to help expand the capabilities of your computer. Options include memory modules, storage devices, network cards, port replicators or docking stations, batteries, power adapters, keyboards, mice, and more.

To shop at Lenovo, go to https://www.lenovo.com/accessories.

Docking station

You can use the following docking stations to extend the capacity of your computer:

- ThinkPad Basic Docking Station
- ThinkPad Pro Docking Station
- ThinkPad Ultra Docking Station

Front view

Note: The following illustration is based on ThinkPad Basic Docking Station. The ThinkPad Pro Docking Station and ThinkPad Ultra Docking Station might look slightly different.

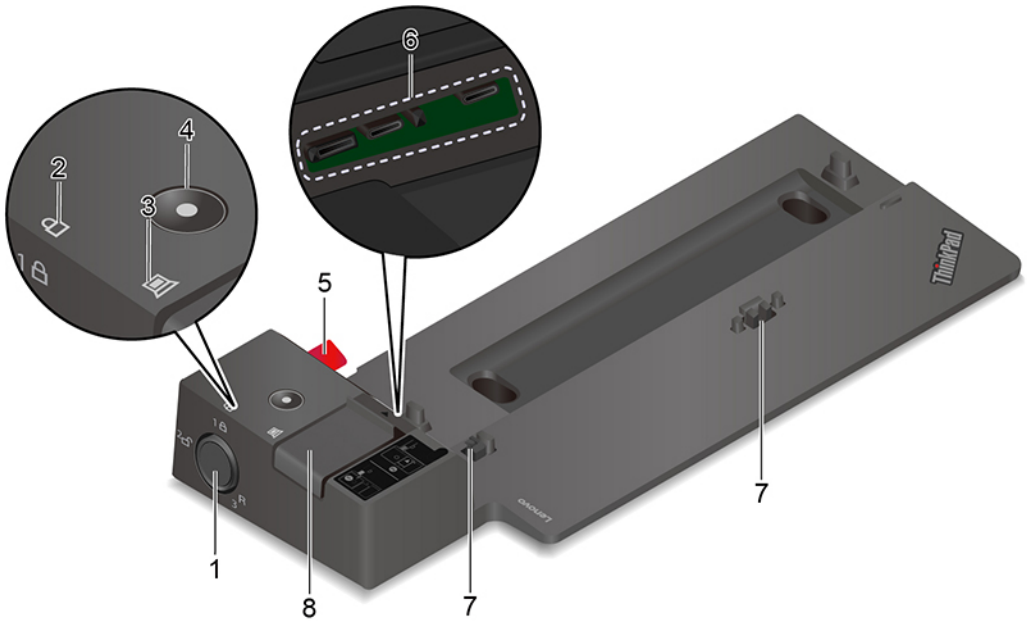

1. System lock	Use the system lock in the following ways: • Locked position 1: The latch is locked, and you cannot attach or detach your computer. • Unlocked position 2: The latch is unlocked, and you can attach or detach your computer. • Removal position 3R: You can remove the system lock from the system-lock slot. **Note:** The ThinkPad Basic Docking Station does not ship with a system lock installed. You can contact Lenovo sales to purchase a system lock with the option part number 4XE0Q56388.
2. Key lock indicator	This indicator turns on when the system lock key is in the locked position.

3. Docking status indicator	This indicator turns on when your computer is successfully connected to the docking station.
4. Power button	Press the power button to turn on or turn off the computer attached to the docking station.
5. Guide post	Use the guide post to help you position your computer properly when you attach the computer to the docking station.
6. Docking-station connector	Connect the computer to the docking station.
7. Hooks	Hold and secure the computer to the docking station.
8. Latch	Slide the latch to attach or detach the computer.

Rear view

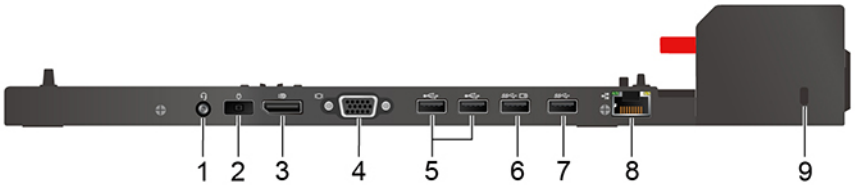

Figure 1. ThinkPad Basic Docking Station

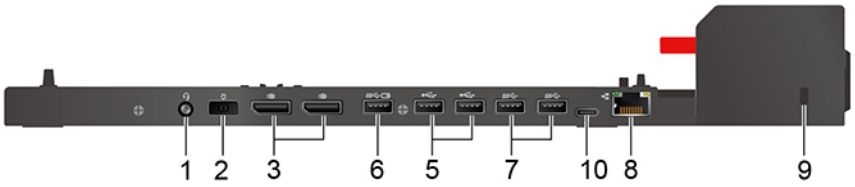

Figure 2. ThinkPad Pro Docking Station

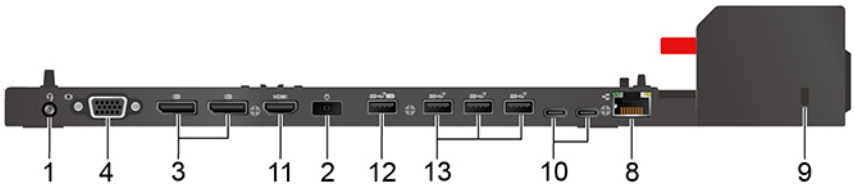

Figure 3. ThinkPad Ultra Docking Station

Connectors	ThinkPad Basic Docking Station	ThinkPad Pro Docking Station	ThinkPad Ultra Docking Station
1. Audio connector	√	√	√
2. ac power connector	√	√	√
3. DisplayPort® connector	√	√	√
4. VGA connector	√		√
5. USB 2.0 connector	√	√	
6. Always On USB 3.2 connector Gen 1	√	√	

Connectors	ThinkPad Basic Docking Station	ThinkPad Pro Docking Station	ThinkPad Ultra Docking Station
7. USB 3.2 connector Gen 1	√	√	
8. Ethernet connector	√	√	√
9. Security-lock slot	√	√	√
10. USB-C connector		√	√
11. HDMI connector			√
12. Always On USB 3.2 connector Gen 2			√
13. USB 3.2 connector Gen 2			√

Note: The security-lock slot supports cable locks that conform to the Kensington MicroSaver lock standards (using T-bar locking technology) or MiniSaver lock standards (using Cleat locking technology).

Attach a docking station

Notes:

- The ThinkPad Basic Docking Station does not ship with a system lock installed. If you do not purchase and install a system lock, skip step 4 and step 7 in the following instruction.
- If you do not connect the docking station to ac power, the computer attached runs on battery power.

1. Connect the docking station to ac power.
2. Disconnect the cables and devices from the left side of the computer.
3. Turn the system lock key to the unlocked position (2).

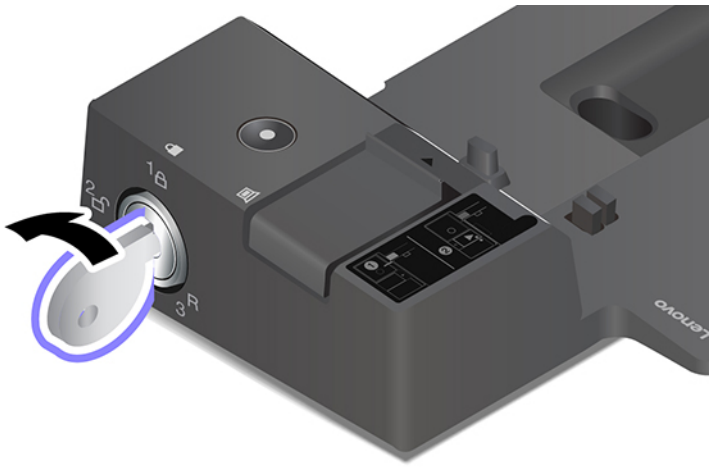

4. Align the top-left corner of the computer with the guide post of the docking station. Attach your computer to the docking station as shown 1 until you hear a click. Slide the latch in the direction as shown 2.

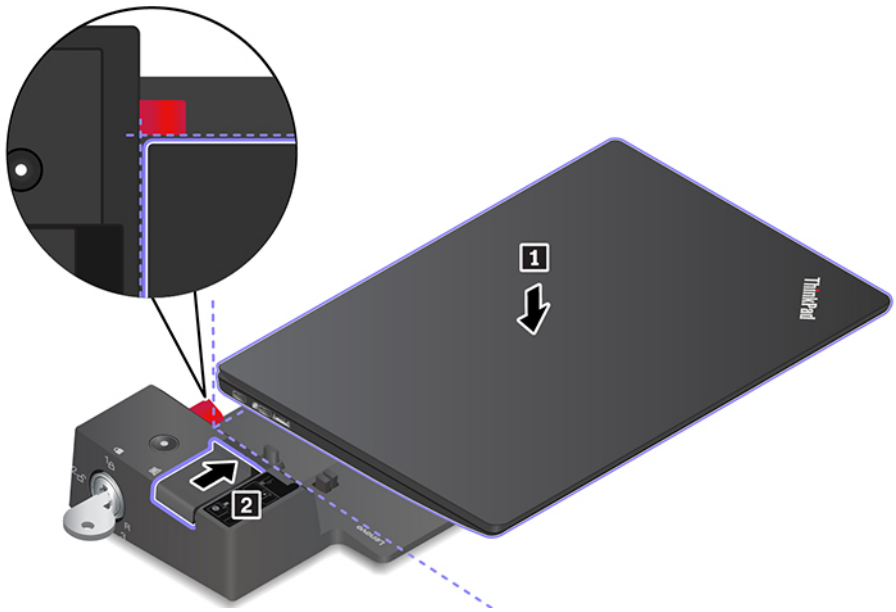

5. Check the docking status indicator. The docking status indicator turns on when the computer is successfully docked.

   Note: If the indicator is off, your computer is not attached to the docking station successfully. To solve the problem, detach and reattach the computer.

6. Turn the system lock key to the locked position (1🔒).

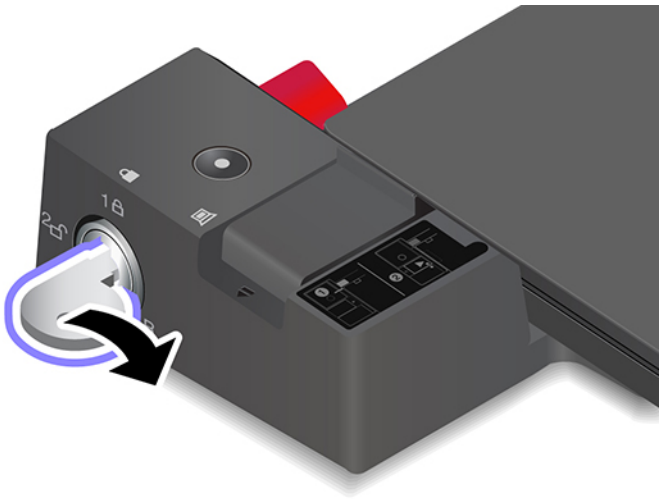

Attention: When the computer is attached to a docking station, always hold the whole assembly when you need to move your computer. Otherwise, the docking station might drop down.

Detach a docking station

Note: The ThinkPad Basic Docking Station does not ship with a system lock installed. If you do not purchase and install a system lock, skip step 1 in the following instruction.

1. Turn the system lock key to the unlocked position (2).

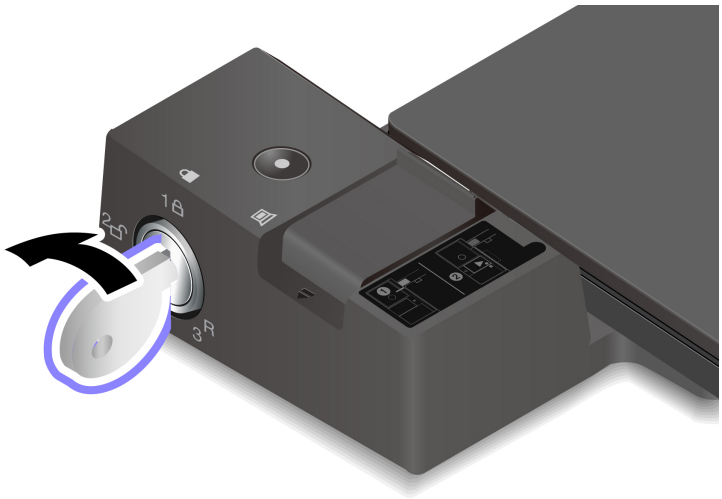

2. Slide the latch in the direction as shown 1 to release the computer, and then grasp both sides of the computer to remove it 2.

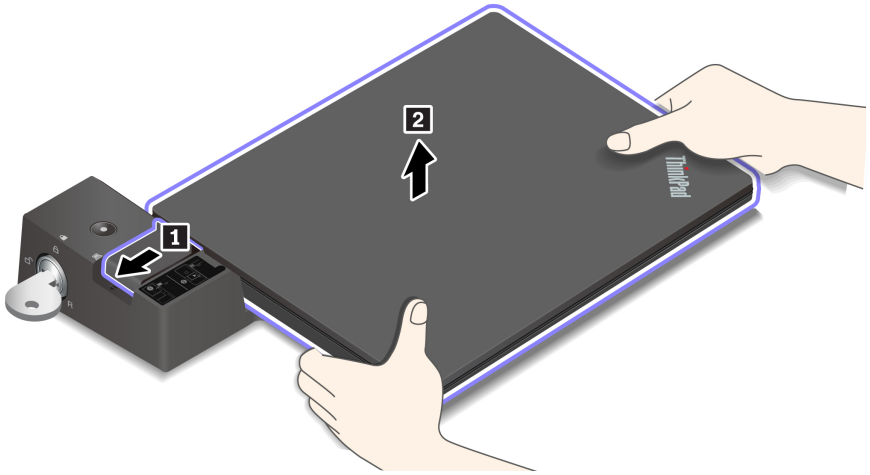

Connect multiple external displays

You can connect multiple external displays to a supported docking station. To ensure that the multiple displays work correctly, observe the following guidelines and connect the external displays to the appropriate connectors.

Docking station	Supported external displays	Video connectors
ThinkPad Basic Docking Station	Up to two	DisplayPort VGA
ThinkPad Pro Docking Station	Up to two	DisplayPort (x2)
ThinkPad Ultra Docking Station	Up to three	DisplayPort (x2) HDMI VGA

Chapter 4. Secure your computer and information

Lock the computer

Lock your computer to a desk, table, or other fixtures through a compatible security cable lock.

Note: The slot supports cable locks that conform to the Kensington MiniSaver® lock standards using Cleat™ locking technology. Do not attempt to use other types of cable locks that use a rotating T-bar™ locking mechanism. You are responsible for evaluating, selecting, and implementing the locking device and security feature. Lenovo makes no comments, judgments, or warranties about the function, quality, or performance of the locking device and security feature. Cable locks for your product are available from Lenovo at https://www.lenovoquickpick.com/.

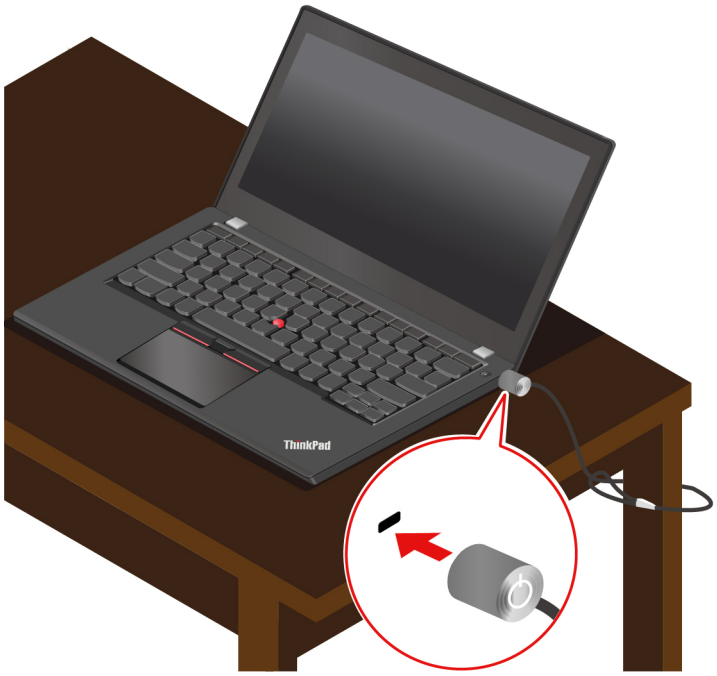

Use the fingerprint reader (for selected models)

If your computer comes with a fingerprint reader, you can use it to enroll your fingerprints. After enrollment, you can tap your finger on the fingerprint reader to log in to the system.

Enroll your fingerprints

Open the system menu and then click **Settings** → **Users** → **Fingerprint Login**. Then, follow the on-screen instructions to finish the enrollment.

During the enrollment, the fingerprints are associated with the user password automatically. It is recommended that you enroll more than one fingerprint in case of any injuries to your fingers.

© Copyright Lenovo 2020, 2022

Log in with your fingerprint

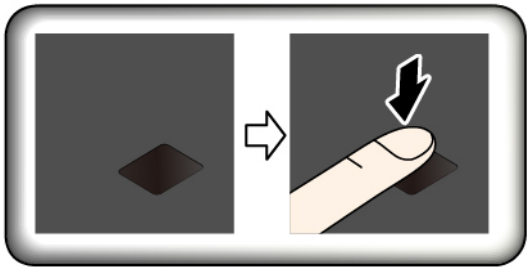

Maintain the fingerprint reader

To ensure that the fingerprint reader works correctly, do not:

- Scratch the surface of the reader with anything hard.
- Use or touch the reader with a wet, dirty, wrinkled, or injured finger.

Use privacy protection (for selected models)

Depending on the model, your computer might support the PrivacyGuard feature which keeps you secure without compromising your viewing experience.

https://support.lenovo.com/solutions/featurevideo

Use the PrivacyGuard feature

When the feature is enabled, it darkens screen and reduces visibility from side angles to protect screen content against visual hacking. By default, the PrivacyGuard feature is disabled. You can press Fn+D to enable it.

The privacy level of this feature varies depending on the screen brightness level, the contrast ratio, and the physical environment where you are using this feature.

- Press F5 to increase the privacy level.
- Press F6 to decrease the privacy level.

Use passwords

This section introduces types of passwords in UEFI (Unified Extensible Firmware Interface) BIOS (Basic Input/Output System) and how to set, change, and remove a password.

Password types

You can set a power-on password, supervisor password, system management password, or hard disk password in UEFI BIOS to prevent unauthorized access to your computer. However, you are not prompted to enter any UEFI BIOS password when your computer resumes from sleep mode.

Power-on password

If you set a power-on password, a window is displayed on the screen when you turn on the computer. Enter the correct password to use the computer.

Supervisor password

The supervisor password protects the system information stored in UEFI BIOS. When entering the UEFI BIOS menu, enter the correct supervisor password in the window prompted. You also can press Enter to skip the password prompt. However, you cannot change most of the system configuration options in UEFI BIOS.

If you have set both the supervisor password and power-on password, you can use the supervisor password to access your computer when you turn it on. The supervisor password overrides the power-on password.

System management password

The system management password can also protect the system information stored in UEFI BIOS like a supervisor password, but it has lower authority by default. The system management password can be set through the UEFI BIOS menu or through Windows Management Instrumentation (WMI) with the Lenovo client-management interface.

You can enable the system management password to have the same authority as the supervisor password to control security related features. To customize the authority of the system management password through the UEFI BIOS menu:

1. Enter the UEFI BIOS menu. See “Enter the UEFI BIOS menu” on page 31.

   Note: When you are prompted to enter the password, enter the correct supervisor password if a supervisor password has been set, or enter the correct system management password if no supervisor password has been set. Otherwise, you cannot change the configurations in the following steps.
2. Select **Security → Password → System Management Password Access Control**.
3. Follow the on-screen instructions.

If you have set both the supervisor password and the system management password, the supervisor password overrides the system management password. If you have set both the system management password and the power-on password, the system management password overrides the power-on password.

Hard disk passwords

The hard disk password prevents unauthorized access to the data on the storage drive. When a hard disk password is set, you are prompted to type a correct password each time you try to access the storage drive.

To set the hard disk password, select one of the following types:

- **User hard disk password only**

  When a user hard disk password is set without a master hard disk password, the user must enter the user hard disk password to access files and applications on the storage drive.
- **Master hard disk password + User hard disk password**

  The master hard disk password is set and used by a system administrator. It enables the administrator to access any storage drive in a system or any computer connected in the same network. The administrator can also assign a user hard disk password for each computer in the network. The user of the computer can change the user hard disk password as desired, but only the administrator can remove the user hard disk password.

When prompted to enter a hard disk password, press F1 to switch between the master hard disk password and user hard disk password.

Note: The hard disk password is not available when a Trusted Computing Group (TCG) Opal-compliant storage drive and a TCG Opal management software program are installed in the computer, and the TCG Opal management software program is activated.

Set, change, and remove a password

Before you start, print these instructions.

1. Restart the computer. When the logo screen is displayed, press F1 to enter the UEFI BIOS menu.
2. Select **Security → Password** by using the arrow keys.
3. Select the password type. Then, follow the on-screen instructions to set, change, or remove a password.

You should record all your passwords and store them in a safe place. If you forget any of your passwords, any potential repair actions required are not covered under warranty.

What to do if you forget your power-on password

If you forget your power-on password, do the following to remove the power-on password:

- If you have set a supervisor password and remember it:
  1. Restart the computer. When the logo screen is displayed, immediately press F1.
  2. Type the supervisor password to enter the UEFI BIOS menu.
  3. Select **Security → Password → Power-On Password** by using the arrow keys.
  4. Type the current supervisor password in the **Enter Current Password** field. Then, leave the **Enter New Password** field blank, and press Enter twice.
  5. In the Changes have been saved window, press Enter.
  6. Press F10 to save changes and exit the UEFI BIOS menu.
- If you have not set a supervisor password, contact a Lenovo authorized service provider to have the power-on password removed.

What to do if you forget your hard disk password

If you forget your user hard disk password or both user and master hard disk passwords, Lenovo cannot reset your passwords or recover data from the storage drive. You can contact a Lenovo authorized service provider to have the storage drive replaced. A fee will be charged for parts and service. If the storage drive is a CRU (Customer Replaceable Unit), you can also contact Lenovo to purchase a new storage drive to replace the old one by yourself. To check whether the storage drive is a CRU and the relevant replacement procedure, see Chapter 6 “CRU replacement” on page 33.

What to do if you forget your supervisor password

If you forget your supervisor password, there is no service procedure to remove the password. You have to contact a Lenovo authorized service provider to have the system board replaced. A fee will be charged for parts and service.

What to do if you forget your system management password

If you forget your system management password, do the following to remove the system management password:

- If you have set a supervisor password and remember it:
  1. Restart the computer. When the logo screen is displayed, immediately press F1.
  2. Type the supervisor password to enter the UEFI BIOS menu.
  3. Select **Security → Password → System Management Password** by using the arrow keys.

4. Type the current supervisor password in the **Enter Current Password** field. Then, leave the **Enter New Password** field blank, and press Enter twice.
5. In the Changes have been saved window, press Enter.
6. Press F10 to save changes and exit the UEFI BIOS menu.

- If you have not set a supervisor password, contact a Lenovo authorized service provider to have the system management password removed.

Use Power Loss Protection function (for selected models)

For models shipped with an NVMe (Non-Volatile Memory express) M.2 solid-state drive, the M.2 solid-state drive features the Lenovo-unique PLP (Power Loss Protection) function to avoid data loss or damage. On very rare occasions, your computer is not responding and you might have to shut down your computer by pressing and holding the power button for about seven seconds. In this case, the PLP function enables key data of your computer to be saved timely. However, there is no guarantee that all data is saved in any situation. To check the type of your M.2 solid-state drive:

1. Restart the computer. When the logo screen is displayed, press F10 to enter the Lenovo diagnostics window.
2. On the TOOLS tab, select **SYSTEM INFORMATION → STORAGE** using the arrow keys.
3. Locate the **Device Type** section to check the information.

Chapter 5. Configure advanced settings

UEFI BIOS

This section introduces what is UEFI BIOS and the operations you can perform in UEFI BIOS.

What is UEFI BIOS

UEFI BIOS is the first program that the computer runs when the computer is turned on. UEFI BIOS initializes the hardware components and loads the operating system and other programs. Your computer comes with a setup program with which you can change UEFI BIOS settings.

Enter the UEFI BIOS menu

Restart the computer. When the logo screen is displayed, press F1 to enter the UEFI BIOS menu.

Note: If you have set the supervisor password, enter the correct password when prompted. You also can press Enter to skip the password prompt and enter the UEFI BIOS menu. However, you cannot change the system configurations that are protected by the supervisor password.

Navigate in the UEFI BIOS interface

Attention: The default configurations are already optimized for you in **boldface**. Improper change of the configurations might cause unexpected results.

You can navigate in the UEFI BIOS interface by pressing the following keys:

- F1: Display the General Help screen.
- F9: Restore to the default settings.
- F10: Save your configuration and exit.
- F5: Change to a lower value.
- F6: Change to a higher value.
- ↑ ↓: Locate an item.
- ← →: Select a tab.
- Esc: Exit the submenu and return to the parent menu.
- Enter: Enter the selected tab or submenu.

Change the startup sequence

1. Restart the computer. When the logo screen is displayed, press F1.
2. Select **Startup → Boot**. Then, press Enter. The default device order list is displayed.

   Note: No bootable device is displayed if the computer cannot start from any devices or the operating system cannot be found.
3. Set the startup sequence as desired.
4. Press F10 to save the changes and exit.

To change the startup sequence temporarily:

1. Restart the computer. When the logo screen is displayed, press F12.

© Copyright Lenovo 2020, 2022

2. Select the device that you want the computer to start from and press Enter.

Set the system date and time

1. Restart the computer. When the logo screen is displayed, press F1.
2. Select **Date/Time** and set the system date and time as desired.
3. Press F10 to save changes and exit.

Update UEFI BIOS

When you install a new program, device driver, or hardware component, you might need to update UEFI BIOS.

Download and install the latest UEFI BIOS update package by one of the following methods:

- Use the fwupdmgr or software utility to check LVFS for firmware updates.
- Go to https://pcsupport.lenovo.com and select the entry for your computer. Then, follow the on-screen instructions to download and install the latest UEFI BIOS update package.

Chapter 6. CRU replacement

Customer Replaceable Units (CRUs) are parts that can be upgraded or replaced by the customer. The computers contain the following types of CRUs:

- **Self-service CRUs:** Refer to parts that can be installed or replaced easily by customer themselves or by trained service technicians at an additional cost.
- **Optional-service CRUs:** Refer to parts that can be installed or replaced by customers with a greater skill level. Trained service technicians can also provide service to install or replace the parts under the type of warranty designated for the customer's machine.

If you intend on installing a CRU, Lenovo will ship the CRU to you. CRU information and replacement instructions are shipped with your product and are available from Lenovo at any time upon request. You might be required to return the defective part that is replaced by the CRU. When return is required: (1) return instructions, a prepaid shipping label, and a container will be included with the replacement CRU; and (2) you might be charged for the replacement CRU if Lenovo does not receive the defective CRU within thirty (30) days of your receipt of the replacement CRU. For full details, see the Lenovo Limited Warranty documentation at https://www.lenovo.com/warranty/llw_02.

CRU list

The following is a list of CRUs of your computer.

Self-service CRUs

- ac power adapter
- Nano-SIM-card tray*
- Power cord

Optional-service CRUs

- Always On USB 3.2 connector Gen 1 board
- Always On USB 3.2 connector Gen 1 board bracket
- Base cover assembly
- Keyboard
- Memory module*
- M.2 solid-state drive
- M.2 solid-state drive bracket*
- Speaker assembly
- Wireless WAN card*

* for selected models

Note: Replacement of any parts not listed above, including the built-in rechargeable battery, must be done by a Lenovo-authorized repair facility or technician. Go to https://support.lenovo.com/partnerlocation for more information.

Disable the built-in battery

Before replacing any CRU, ensure that you disable the built-in battery.

© Copyright Lenovo 2020, 2022

To disable the built-in battery:

1. Restart your computer. When the logo screen is displayed, immediately press F1 to enter the UEFI BIOS menu.
2. Select **Config → Power**. The **Power** submenu is displayed.
3. Select **Disable Built-in Battery** and press Enter.
4. Select **Yes** in the Setup Confirmation window. The built-in battery is disabled and the computer turns off automatically. Wait three to five minutes to let the computer cool.

Replace a CRU

Follow the replacement procedure to replace a CRU.

Base cover assembly (T14 Gen 1 and P14s Gen 1)

Prerequisite

Before you start, read *Generic Safety and Compliance Notices* and print the following instructions.

Note: Do not remove the base cover assembly when your computer is connected to ac power. Otherwise, there might be a risk of short circuits.

Replacement procedure

1. Disable the built-in battery. See “Disable the built-in battery” on page 33.
2. Turn off the computer and disconnect the computer from ac power and all connected cables. Then, close the computer display.
3. Remove the nano-SIM-card tray if your computer comes with one.
4. Turn over the computer.
5. Loosen the screws that secure the base cover assembly.

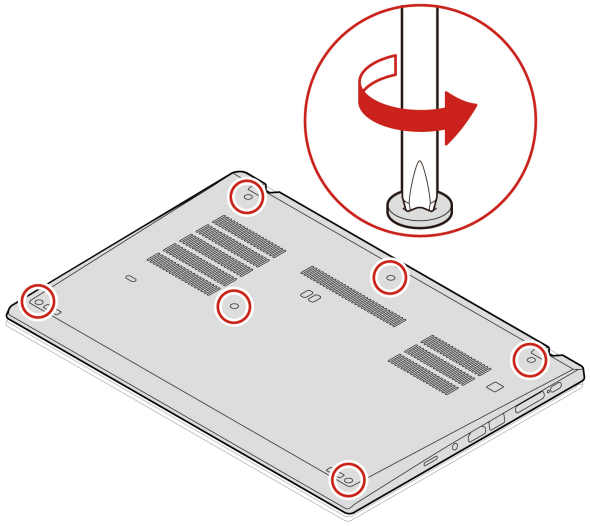

6. Pry up the latches in ascending alphabetical order (a to k) 1 and remove the base cover assembly 2.

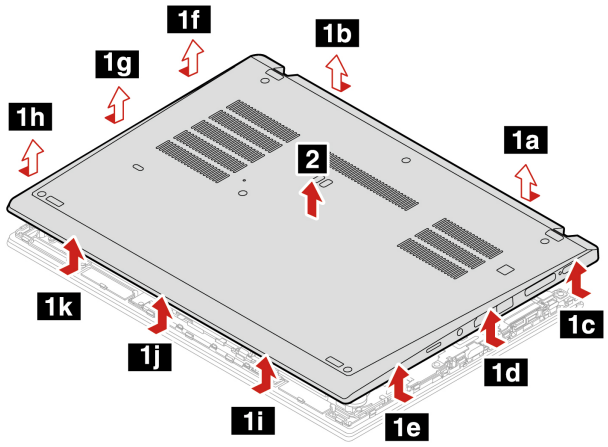

7. Install the new base cover assembly in ascending alphabetical order (a to i). Ensure that the latches of the base cover assembly are secured under the base cover assembly.

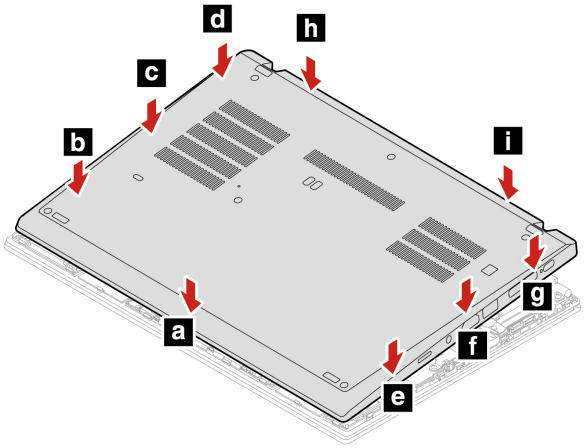

8. Tighten the screws to secure the base cover assembly.

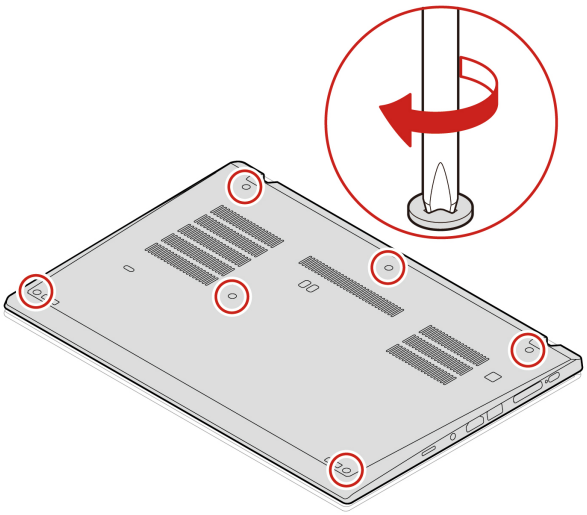

9. Turn over the computer and reinstall the nano-SIM-card tray.

10. Connect the ac power adapter and all disconnected cables to the computer.

Troubleshooting

If the computer does not start up after you reinstall the base cover assembly, disconnect the ac power adapter and then reconnect it to the computer.

Base cover assembly (T15 Gen 1 and P15s Gen 1)

Prerequisite

Before you start, read *Generic Safety and Compliance Notices* and print the following instructions.

Note: Do not remove the base cover assembly when your computer is connected to ac power. Otherwise, there might be a risk of short circuits.

Replacement procedure

1. Disable the built-in battery. See “Disable the built-in battery” on page 33.
2. Turn off the computer and disconnect the computer from ac power and all connected cables. Then, close the computer display.
3. Remove the nano-SIM-card tray if your computer comes with one.
4. Turn over the computer.
5. Loosen the screws that secure the base cover assembly.

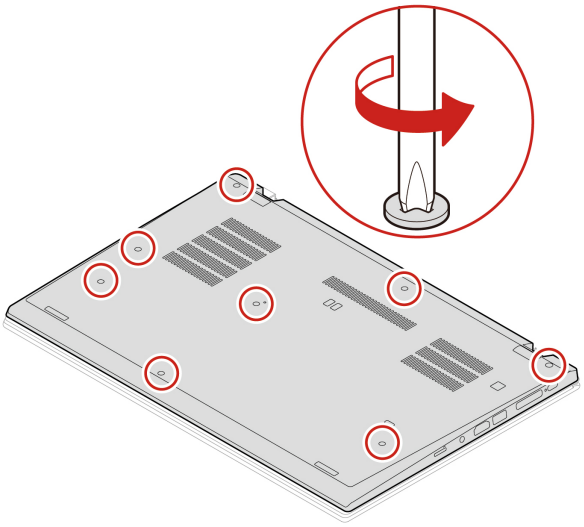

6. Pry up the latches in ascending alphabetical order (a to h) 1 and remove the base cover assembly 2.

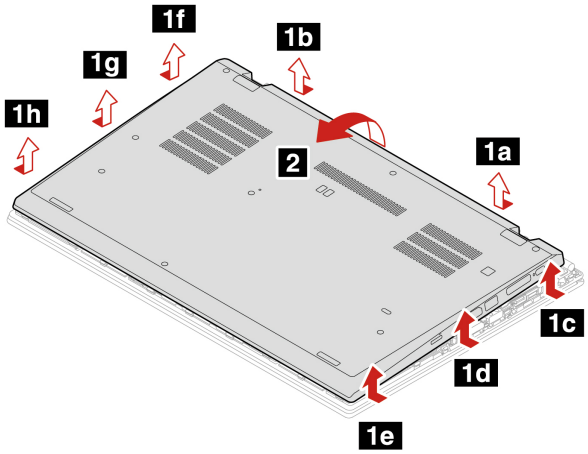

7. Install the new base cover assembly in ascending alphabetical order (a to k). Ensure that the latches of the base cover assembly are secured under the base cover assembly.

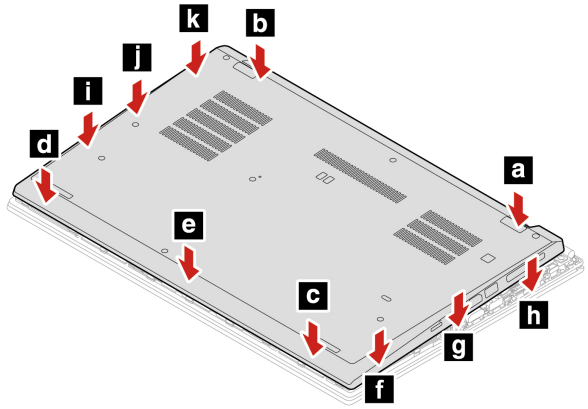

8. Tighten the screws to secure the base cover assembly.

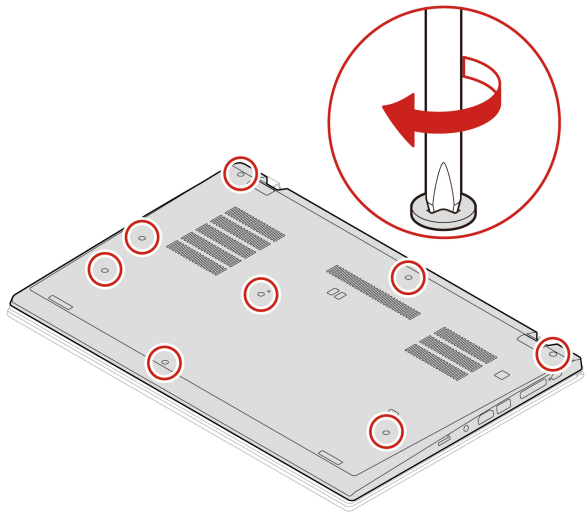

9. Turn the computer over and reinstall the nano-SIM-card tray.
10. Connect the ac power adapter and all disconnected cables to the computer.

Troubleshooting

If the computer does not start up after you reinstall the base cover assembly, disconnect the ac power adapter and then reconnect it to the computer.

Memory module (for selected models)

Prerequisite

Before you start, read *Generic Safety and Compliance Notices* and print the following instructions.

Attention: Do not touch the contact edge of the memory module. Otherwise, the memory module might get damaged.

Replacement procedure

To replace a memory module, do the following:

1. Disable the built-in battery. See “Disable the built-in battery” on page 33.
2. Turn off the computer and disconnect the computer from ac power and all connected cables. Then, close the computer display.
3. Remove the nano-SIM-card tray if your computer comes with one.
4. Remove the base cover assembly. See “Base cover assembly (T14 Gen 1 and P14s Gen 1)” on page 34 or “Base cover assembly (T15 Gen 1 and P15s Gen 1)” on page 36.
5. Open the latches on both sides of the memory slot at the same time 1, and then remove the memory module 2.

   Note: A Mylar film might cover the memory module. To access the memory module, open the film first.

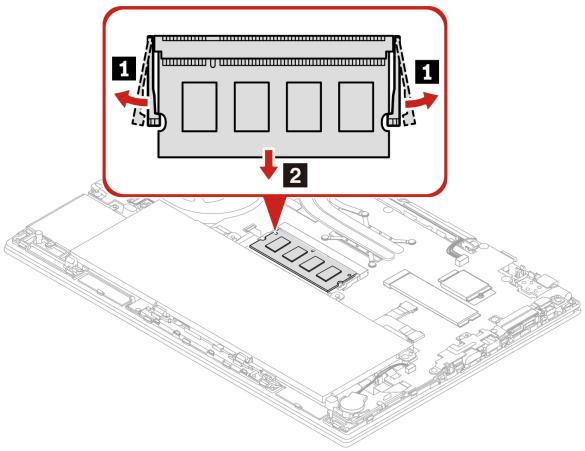

6. Install the memory module by doing the following:
   a. Place the notched end of the new memory module toward the contact edge side of the memory slot. Then, insert the new memory module into the memory slot at an angle of about 20 degrees 1.
   b. Pivot the memory module downward until it snaps into place 2. Ensure that the memory module is firmly installed in the memory slot and cannot be moved easily.

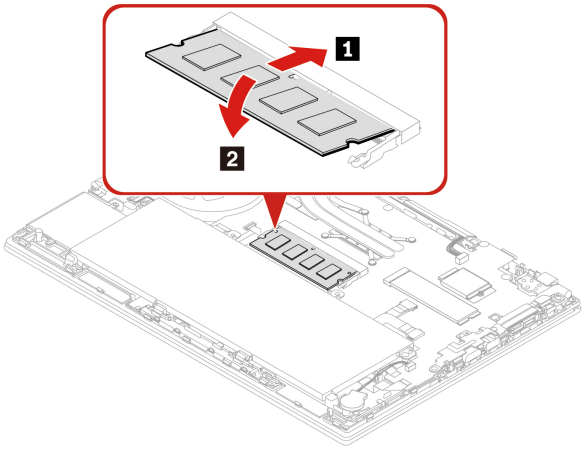

7. Reinstall the base cover assembly and the nano-SIM-card tray.
8. Connect the ac power adapter and all disconnected cables to the computer.

M.2 solid-state drive

Prerequisite

Before you start, read *Generic Safety and Compliance Notices* and print the following instructions.

Attention: If your computer is installed with a hybrid solid-state drive (with Intel Optane memory), go to https://support.lenovo.com/docs/tg_ssd to know the details on how to replace it.

The M.2 solid-state drive is sensitive. Inappropriate handling might cause damage and permanent loss of data.

When handling the M.2 solid-state drive, observe the following guidelines:

- Replace the M.2 solid-state drive only for upgrade or repair. The M.2 solid-state drive is not designed for frequent changes or replacement.
- Before replacing the M.2 solid-state drive, make a backup copy of all the data that you want to keep.
- Do not apply pressure to the M.2 solid-state drive.
- Do not touch the contact edge or circuit board of the M.2 solid-state drive. Otherwise the M.2 solid-state drive might get damaged.
- Do not make the M.2 solid-state drive subject to physical shocks or vibration. Put the M.2 solid-state drive on a soft material, such as cloth, to absorb physical shocks.

Replacement procedure for the long M.2 solid-state drive

1. Disable the built-in battery. See “Disable the built-in battery” on page 33.
2. Turn off the computer and disconnect the computer from ac power and all connected cables. Then, close the computer display.
3. Remove the nano-SIM-card tray if your computer comes with one.

4. Remove the base cover assembly. See “Base cover assembly (T14 Gen 1 and P14s Gen 1)” on page 34 or “Base cover assembly (T15 Gen 1 and P15s Gen 1)” on page 36.
5. Remove the M.2 solid-state drive by doing the following:

   Note: A Mylar film might cover the M.2 solid-state drive. To access the M.2 solid-state drive, open the film first.

   a. Remove the screw that secures the M.2 solid-state drive 1. The M.2 solid-state drive is released from the secured position and pivots upward.
   b. Carefully remove the drive out of the slot 2.

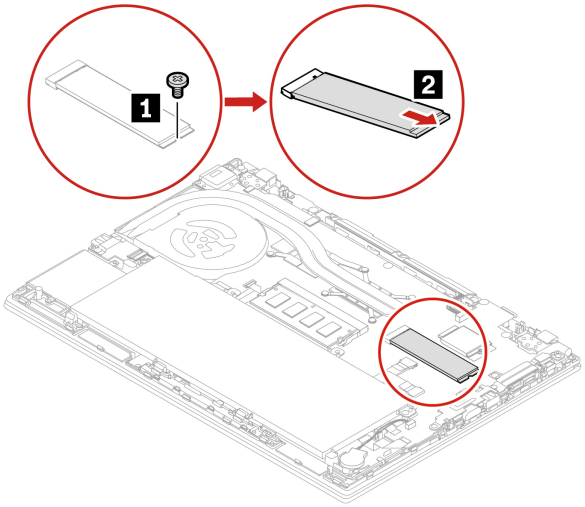

6. Install a new M.2 solid-state drive by doing the following:

   Note: A Mylar film might cover the M.2 solid-state drive. To access the M.2 solid-state drive, open the film first.

   a. Align the contact edge of the new M.2 solid-state drive with the key in the slot. Then, carefully insert the drive into the slot at an angle of about 20 degrees 1 and pivot the M.2 solid-state drive downward 2.
   b. Install the screw to secure the M.2 solid-state drive 3.

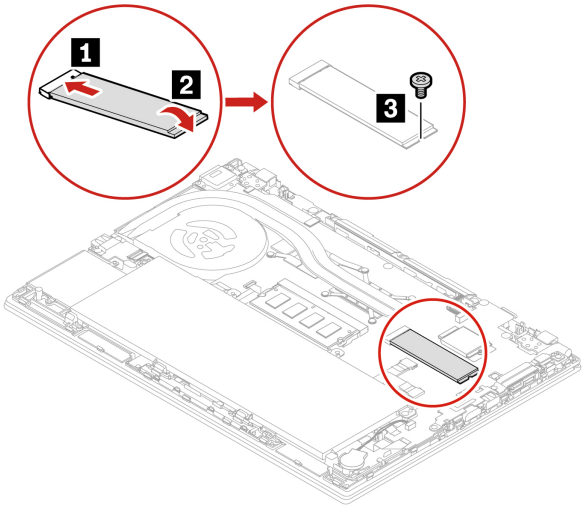

7. Reinstall the base cover assembly.

8. Connect the ac power adapter and all disconnected cables to the computer.

Replacement procedure for the short M.2 solid-state drive

Note: A Mylar film might cover the M.2 solid-state drive. To access the M.2 solid-state drive, open the film first.

1. Disable the built-in battery. See “Disable the built-in battery” on page 33.
2. Turn off the computer and disconnect the computer from ac power and all connected cables. Then, close the computer display
3. Remove the base cover assembly. See “Base cover assembly (T14 Gen 1 and P14s Gen 1)” on page 34 or “Base cover assembly (T15 Gen 1 and P15s Gen 1)” on page 36.
4. Remove the screw that secures the M.2 solid-state drive bracket 1 and remove the M.2 solid-state drive bracket 2. Then, remove the M.2 solid-state drive out of the drive slot 3.

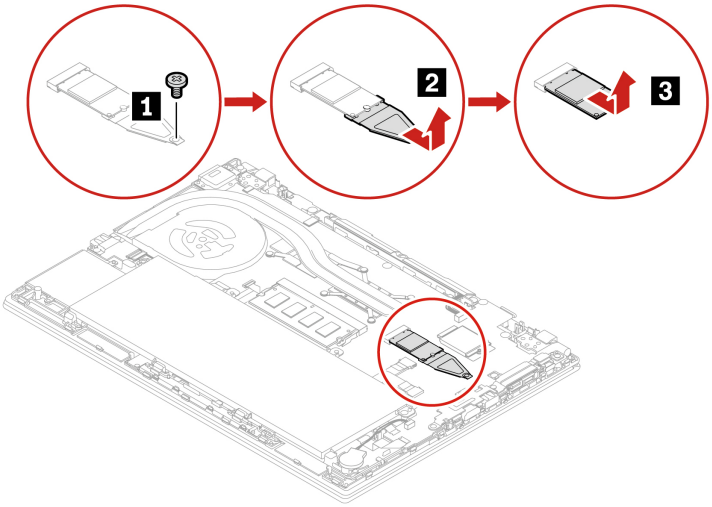

5. Install the new M.2 solid-state drive on the bracket 1 and insert the new M.2 solid-state drive with the bracket to the drive slot 2. Then, install the screw to secure the bracket 3.

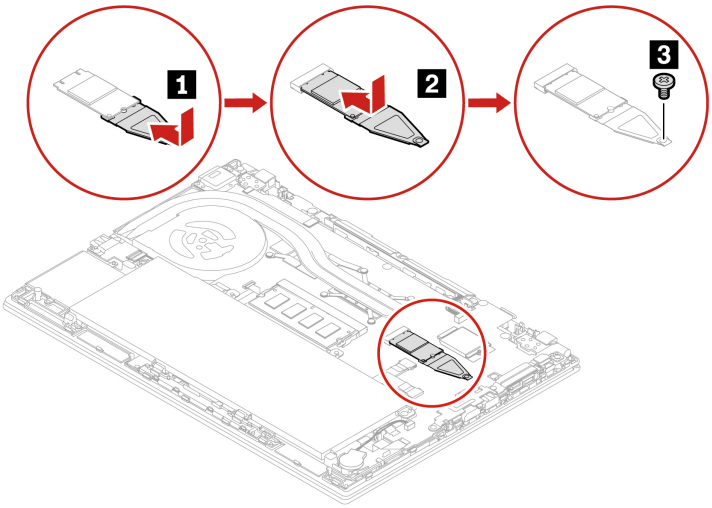

6. Reinstall the base cover assembly and the nano-SIM-card tray.
7. Connect the ac power adapter and all disconnected cables to the computer.

Wireless WAN card (for selected models)

The following information is only for the computer with user-installable modules. Ensure that you use only a Lenovo-authorized wireless module specifically tested for this computer model. Otherwise, the computer will generate an error-code beep sequence when you turn on the computer.

Prerequisite

Before you start, read *Generic Safety and Compliance Notices* and print the following instructions.

Attention: Do not touch the contact edge of the wireless-WAN card. Otherwise the wireless-WAN card might get damaged.

Wireless-WAN card with two antenna cables

1. Disable the built-in battery. See “Disable the built-in battery” on page 33.
2. Turn off the computer and disconnect the computer from ac power and all connected cables. Then, close the computer display.
3. Remove the nano-SIM-card tray if your computer comes with one.
4. Remove the base cover assembly. See “Base cover assembly (T14 Gen 1 and P14s Gen 1)” on page 34 or “Base cover assembly (T15 Gen 1 and P15s Gen 1)” on page 36.
5. Remove the wireless-WAN card:

   Note: A Mylar film might cover the wireless-WAN card. To access the wireless-WAN card, open the film first.

   a. Hold the cable connector with your fingers and gently disconnect each cable from the wireless-WAN card 1. Then, remove the screw that secures the wireless-WAN card 2. The card is released from the secured position and pivots upward.

   b. Carefully remove the wireless-WAN card out of the slot 3.

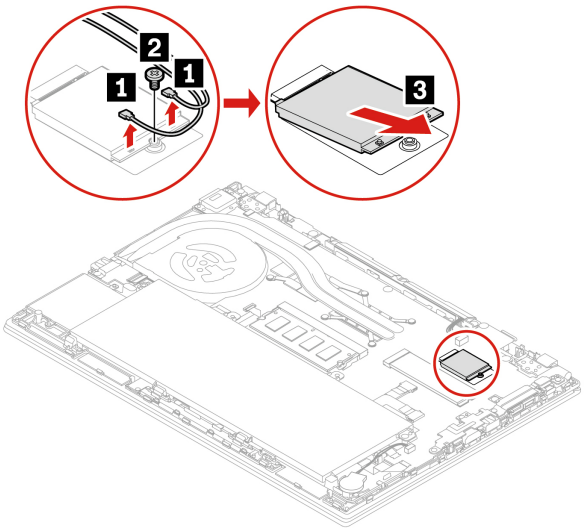

6. Install a new wireless-WAN card:
   a. Align the contact edge of the new wireless-WAN card with the key in the slot. Then, carefully insert the card into the slot at an angle of about 20 degrees 1. Pivot the card downward 2.
   b. Install the screw to secure the wireless-WAN card in place 3. Connect the antenna cables to the card 4. Ensure that you connect the orange cable to the main connector on the card, and the blue cable to the auxiliary connector on the card.

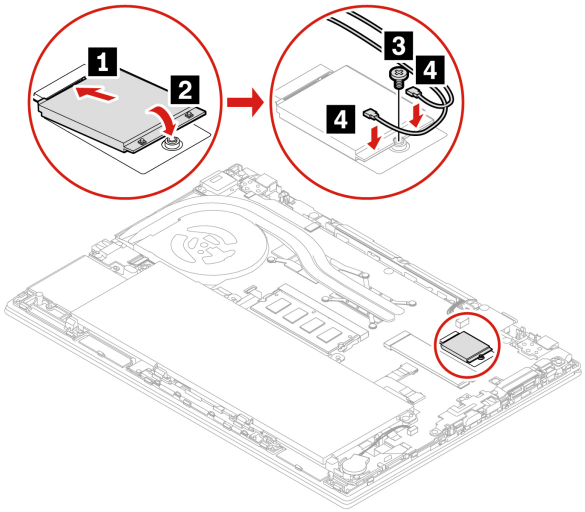

7. Reinstall the base cover assembly and the nano-SIM-card tray.
8. Connect the ac power adapter and all disconnected cables to the computer.

Wireless-WAN card with four antenna cables (for selected Intel models)

1. Disable the built-in battery. See “Disable the built-in battery” on page 33.
2. Turn off the computer and disconnect the computer from ac power and all connected cables. Then, close the computer display.
3. Remove the nano-SIM-card tray if your computer comes with one.
4. Remove the base cover assembly. See “Base cover assembly (T14 Gen 1 and P14s Gen 1)” on page 34.

5. Remove the wireless-WAN card by doing the following:

   Note: A Mylar film might cover the wireless-WAN card. To access the wireless-WAN card, open the film first.

   a. Hold the cable connector with your fingers and gently disconnect each cable from the wireless-WAN card 1. Then, remove the screw that secures the wireless-WAN card 2. The card is released from the secured position and pivots upward.

   b. Carefully remove the wireless-WAN card out of the slot 3.

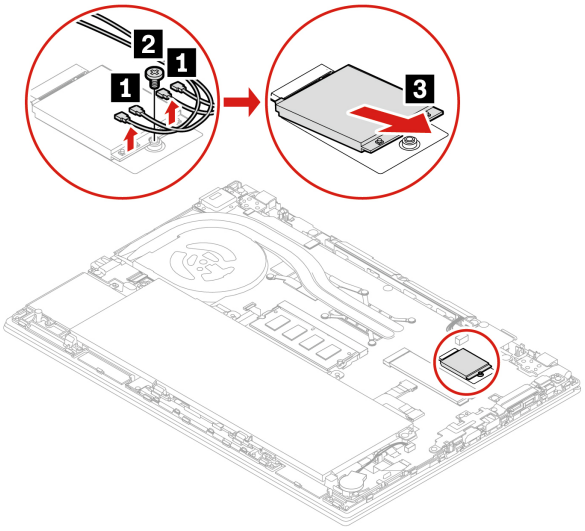

6. Install a new wireless-WAN card by doing the following:

   a. Align the contact edge of the new wireless-WAN card with the key in the slot. Then, carefully insert the card into the slot at an angle of about 20 degrees 1. Pivot the card downward 2.

   b. Install the screw to secure the wireless-WAN card in place 3. Connect the antenna cables to the card 4. Ensure that you connect the orange cable to the main connector on the card, the blue cable to the auxiliary connector on the card, the white and grey cable to the M1 connector on the card, and the black and grey cable to the M2 connector on the card.

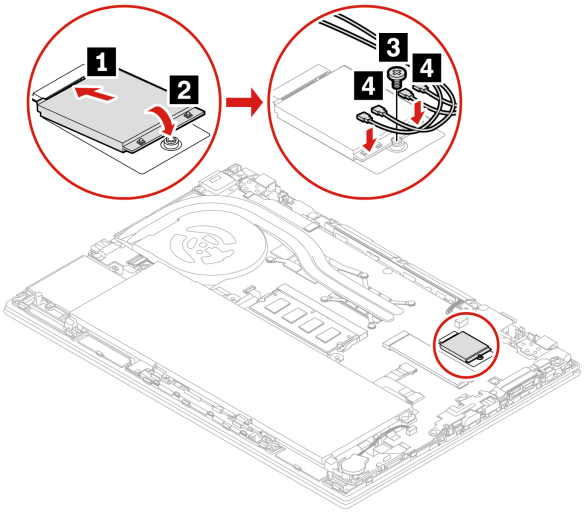

7. Reinstall the base cover assembly and the nano-SIM-card tray.
8. Connect the ac power adapter and all disconnected cables to the computer.

Keyboard

Prerequisite

Before you start, read *Generic Safety and Compliance Notices* and print the following instructions.

Replacement procedure

Notes:

- You might be instructed to slide the keyboard frame forward or backward in some of the following steps. In this case, ensure that you do not press or hold the keys while sliding the keyboard frame. Otherwise, the keyboard frame cannot be moved.
- Your keyboard might look different from the illustrations in this topic.

1. Disable the built-in battery. See “Disable the built-in battery” on page 33.
2. Turn off the computer and disconnect the computer from ac power and all connected cables.
3. For T15 Gen 1 and P15s Gen 1, loosen the screw that secures the keyboard.

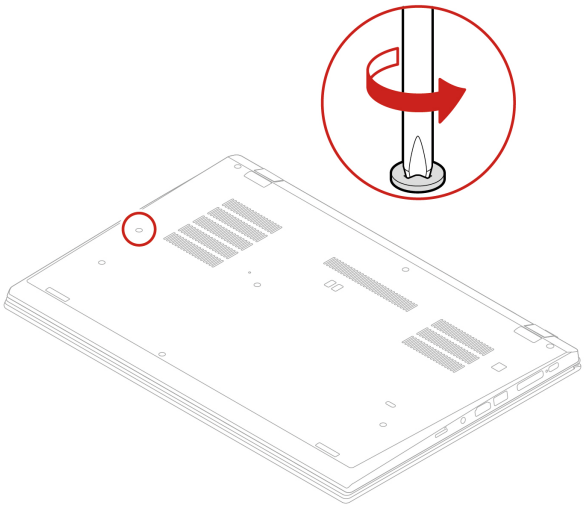

4. Take the tool out of the new keyboard package. Insert the tabs a and b into the slot between the TrackPoint buttons and the trackpad 1. Slightly pivot the tool downward 2 to release the left and right TrackPoint buttons. Then, remove the two Trackpoint buttons 3.

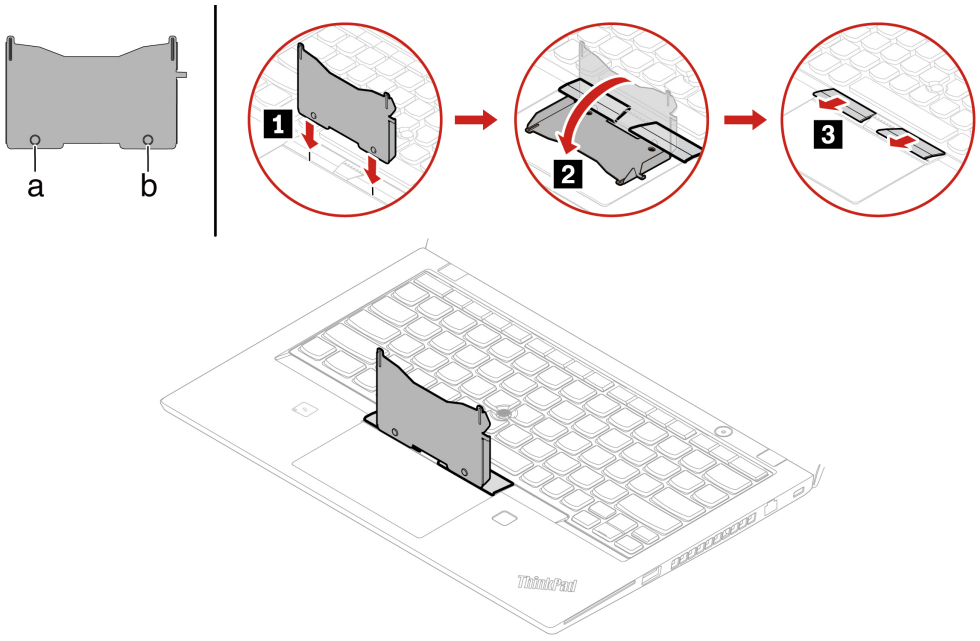

5. Loosen the screws that secure the keyboard.

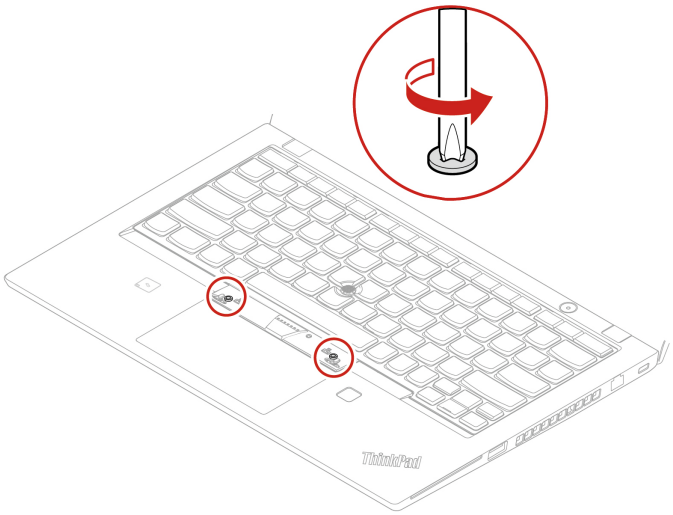

6. Insert the tabs c and d into the two dents near the two screw heads as shown.

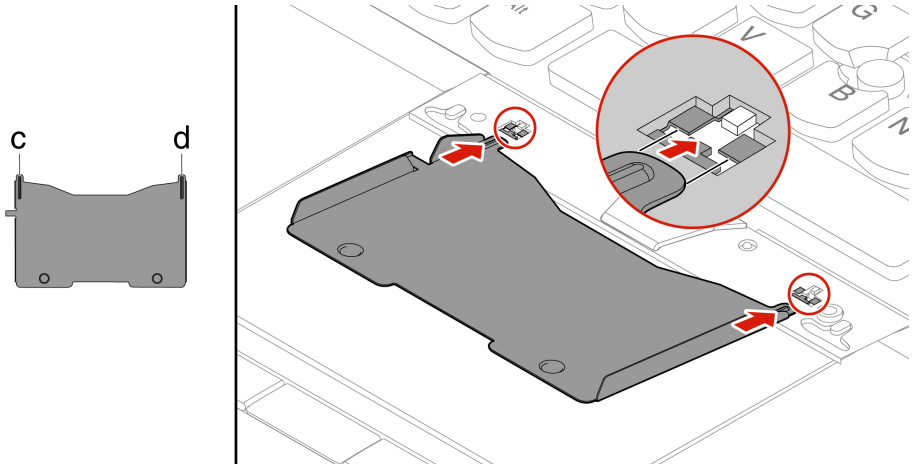

7. Pivot the tool in the direction as shown to release the keyboard 1. Push the keyboard in the direction as shown by arrows 2 to release the latches from the keyboard bezel.

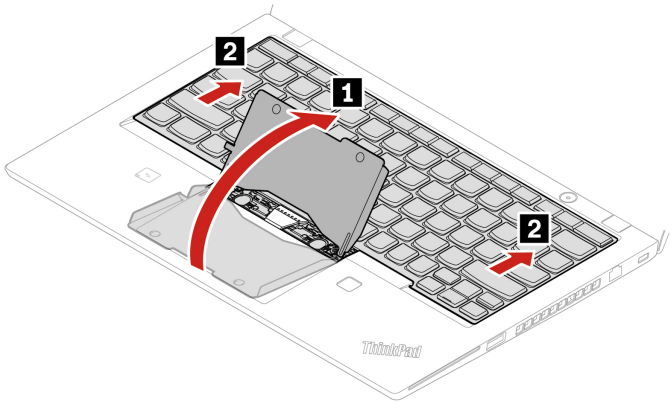

8. Pivot the keyboard slightly upward as shown by arrow 1. Then, turn over the keyboard as shown by arrow 2.

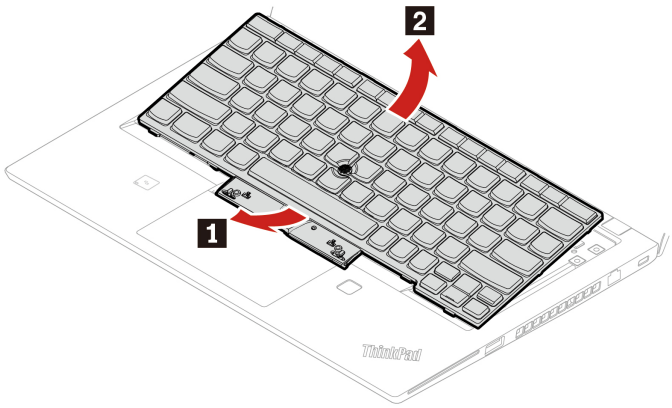

9. Put the keyboard on the palm rest as shown and detach the connectors. Then, remove the keyboard.

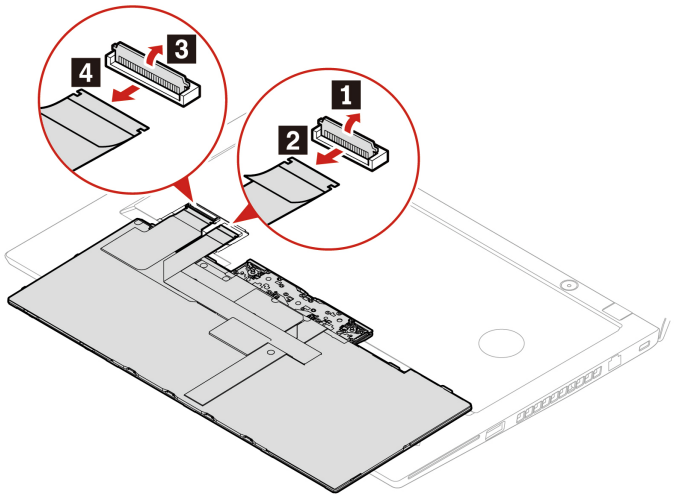

10. Attach the connectors and turn over the keyboard as shown.

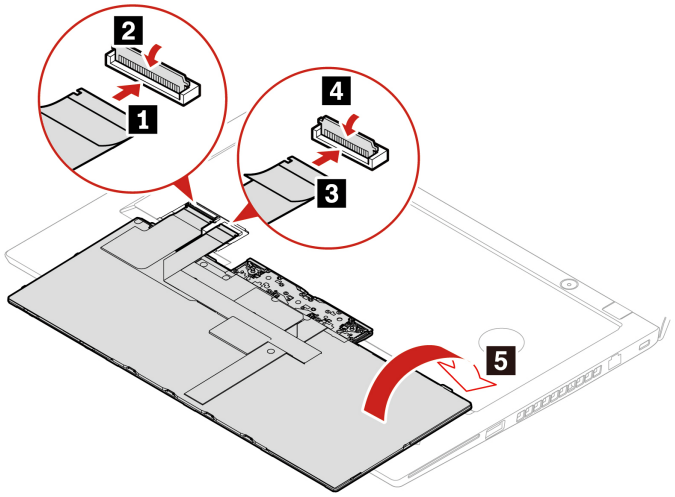

11. Insert the keyboard into the keyboard bezel as shown. Ensure that the top edge of the keyboard (the edge that is close to the display) is under the keyboard bezel.

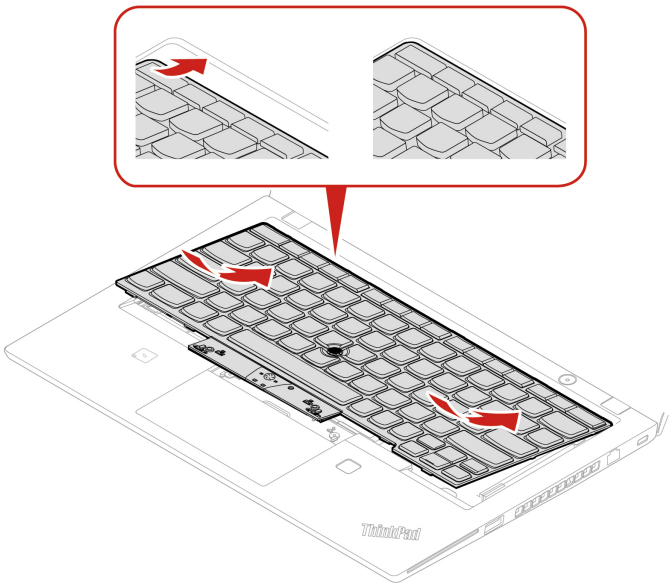

12. Slide the keyboard in the direction as shown by the arrows. Ensure that the latches are secured under the keyboard frame.

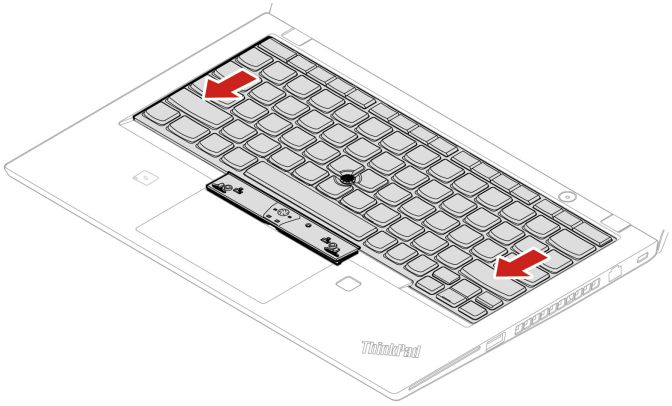

13. Tighten the screws to secure the keyboard.

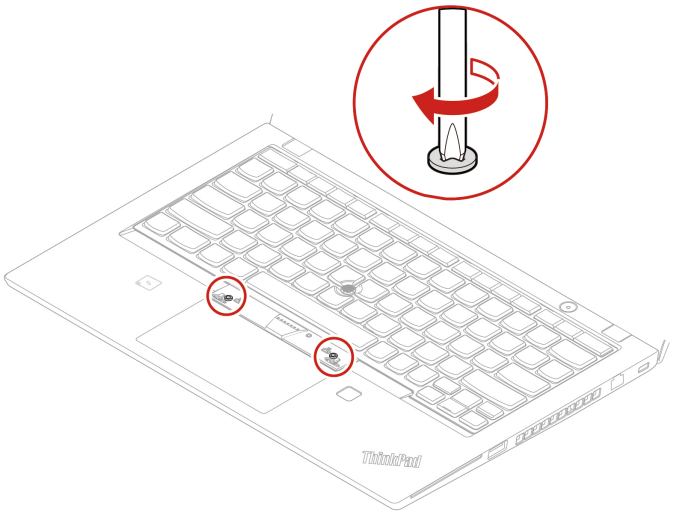

14. Take the new TrackPoint buttons out of the new keyboard package. Install the TrackPoint buttons as shown.

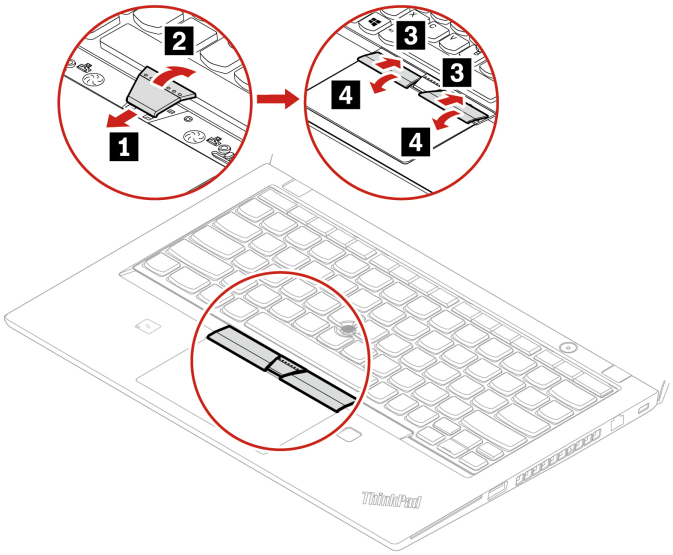

15. For T15 Gen 1 and P15s Gen 1, tighten the screw that secures the keyboard.

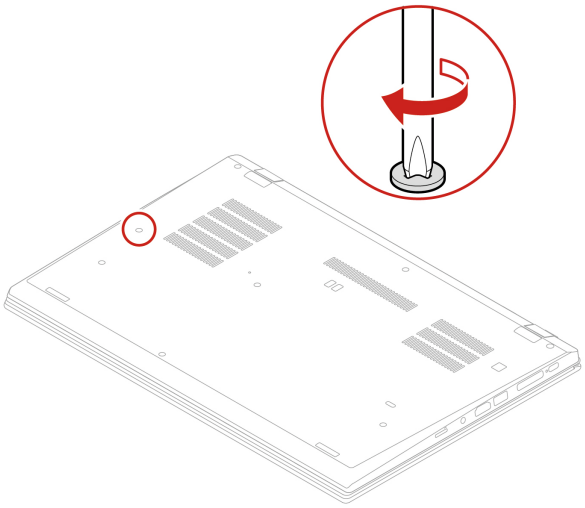

16. Connect the ac power adapter and all disconnected cables to the computer.

Speaker assembly

Prerequisite

Before you start, read *Generic Safety and Compliance Notices* and print the following instructions.

Replacement procedure

1. Disable the built-in battery. See “Disable the built-in battery” on page 33.
2. Turn off the computer and disconnect the computer from ac power and all connected cables. Then, close the computer display.
3. Remove the nano-SIM-card tray if your computer comes with one.
4. Remove the base cover assembly. See “Base cover assembly (T14 Gen 1 and P14s Gen 1)” on page 34 or “Base cover assembly (T15 Gen 1 and P15s Gen 1)” on page 36.
5. Detach the connector of the speaker assembly.

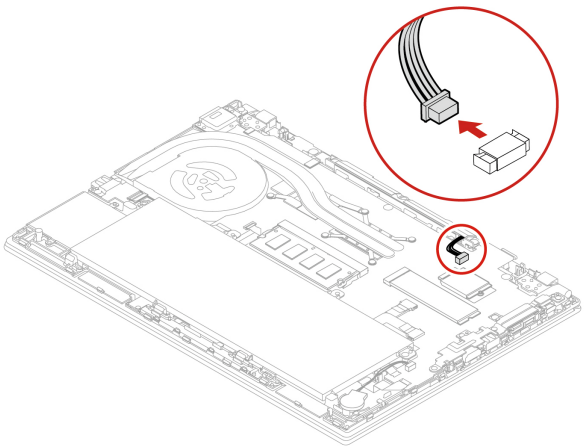

6. Remove the screws that secure the speaker assembly 1, and then remove the speaker assembly 2.

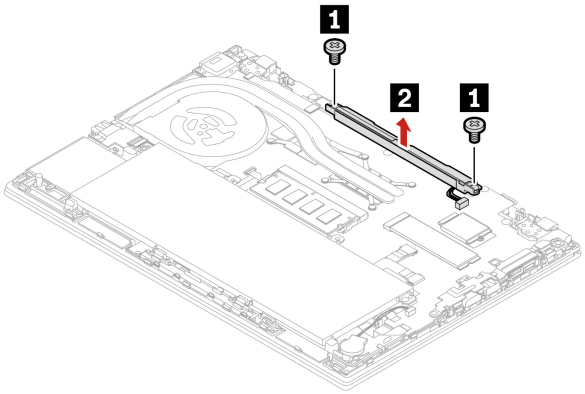

7. Install the new speaker assembly in place 1, and then install the screws to secure the speaker assembly 2.

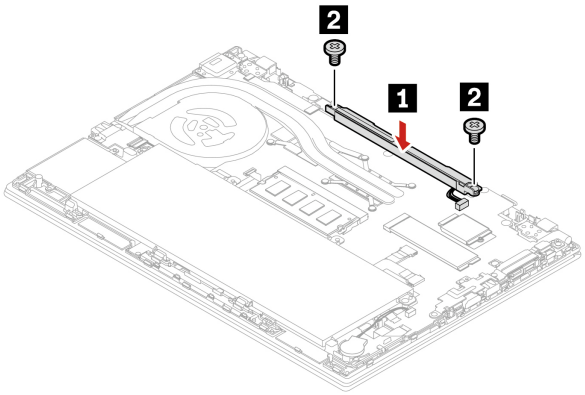

8. Attach the connector of the speaker assembly.

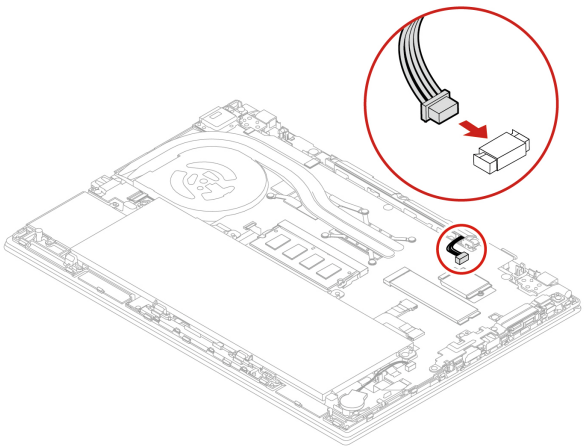

9. Reinstall the base cover assembly and the nano-SIM-card tray.
10. Connect the ac power adapter and all disconnected cables to the computer.

Always On USB 3.2 connector Gen 1 board

Prerequisite

Before you start, read *Generic Safety and Compliance Notices* and print the following instructions.

Replacement procedure

1. Disable the built-in battery. See “Disable the built-in battery” on page 33.
2. Turn off the computer and disconnect the computer from ac power and all connected cables. Then, close the computer display.
3. Remove the nano-SIM-card tray if your computer comes with one.
4. Remove the base cover assembly. See “Base cover assembly (T14 Gen 1 and P14s Gen 1)” on page 34 or “Base cover assembly (T15 Gen 1 and P15s Gen 1)” on page 36.
5. Detach the connector of the Always On USB 3.2 connector Gen 1 board (hereafter referred to as board).

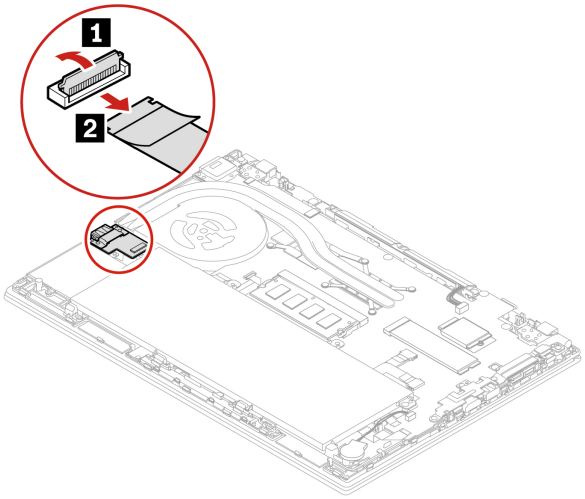

6. Remove the screws that secure the bracket 1, and then remove the bracket 2. Then, remove the board 3.

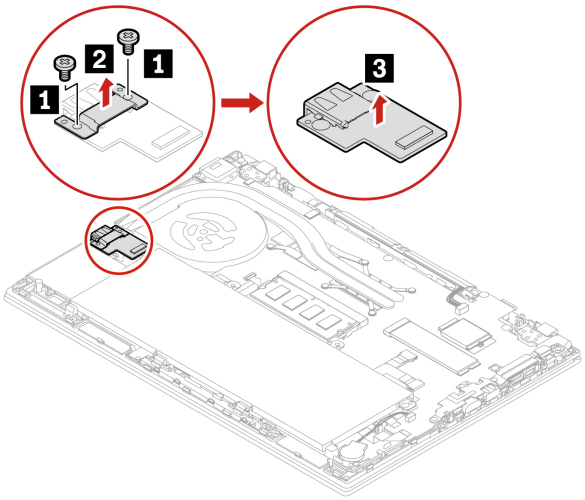

7. Install the new board in place 1. Then, place the bracket on the board 2 and install the screws to secure the board 3.

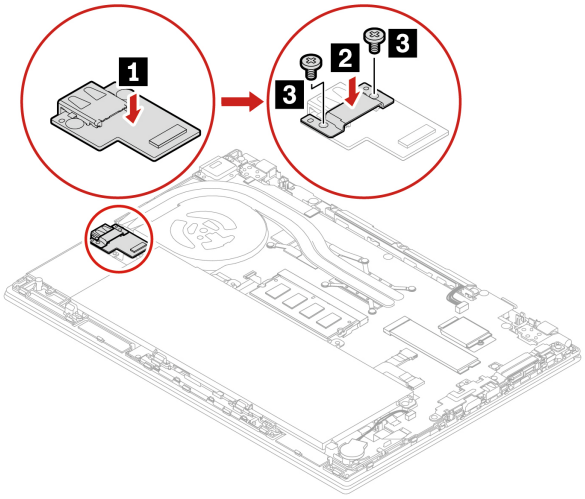

8. Attach the connector of the board.

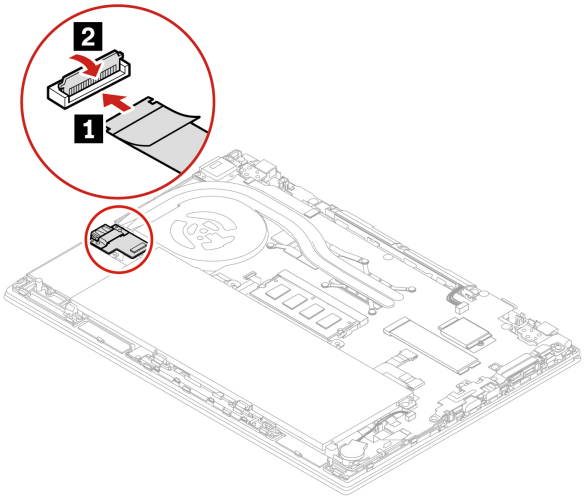

9. Reinstall the base cover assembly and the nano-SIM-card tray.
10. Connect the ac power adapter and all disconnected cables to the computer.

Chapter 7. Help and support

Frequently asked questions

Question	Solution
How do I access **Settings**?	Open the system menu drop down (top right) and click **Settings**.
How do I turn off my computer?	From the system menu (top right) click ⏻, and then click **Power Off**.
What do I do if my computer stops responding.	1. Press and hold the power button until the computer turns off. Then, restart the computer. 2. If step 1 does not work: • For models with an emergency reset hole: Insert a straightened paper clip into the emergency reset hole to cut off power supply temporarily. Then, restart the computer with ac power connected. • For models without an emergency reset hole: – For models with the removable battery, remove the removable battery and disconnect all power sources. Then, reconnect to ac power and restart the computer. – For models with the built-in battery, disconnect all power sources. Press and hold the power button for about seven seconds. Then, reconnect to ac power and restart the computer.
What do I do if I spill liquid on the computer?	1. Carefully unplug the ac power adapter and turn off the computer immediately. The more quickly you stop the current from passing through the computer the more likely you will reduce damage from short circuits. **Attention:** Although you might lose some data or work by turning off the computer immediately, leaving the computer on might make your computer unusable. 2. Do not try to drain out the liquid by turning over the computer. If your computer has keyboard drainage holes on the bottom, the liquid will be drained out through the holes. 3. Wait until you are certain that all the liquid is dry before turning on your computer.
How do I enter the UEFI BIOS menu?	Restart the computer. When the logo screen is displayed, press F1 to enter the UEFI BIOS menu.
How do I disable my trackpad?	1. Open the system menu, and then click **Settings → Mouse & Touchpad**. 2. In the Touchpad section, turn off the **Touchpad** control.
Where can I get the latest device drivers and UEFI BIOS?	Use the Software application to check for updates. It should notify when new firmware is available on LVFS (https://fwupd.org/).

© Copyright Lenovo 2020, 2022

Error messages

If you see a message that is not included in the following table, record the error message first, then shut down the computer and call Lenovo for help. See “Lenovo Customer Support Center” on page 60.

Message	Solution
0190: Critical low-battery error	The computer turned off because the battery power is low. Connect the ac power adapter to the computer and charge the batteries.
0191: System Security - Invalid remote change requested	The system configuration change has failed. Confirm the operation and try again.
0199: System Security - Security password retry count exceeded.	This message is displayed when you enter a wrong supervisor password more than three times. Confirm the supervisor password and try again.
0271: Check Date and Time settings.	The date or the time is not set in the computer. Enter the UEFI BIOS menu and set the date and time.
210x/211x: Detection/Read error on HDDx/SSDx	The storage drive is not working. Reinstall the storage drive. If the problem still exists, replace the storage drive.
Error: The non-volatile system UEFI variable storage is nearly full.	**Note:** This error indicates that the operating system or programs cannot create, modify, or delete data in the non-volatile system UEFI variable storage due to insufficient storage space after POST. The non-volatile system UEFI variable storage is used by the UEFI BIOS and by the operating system or programs. This error occurs when the operating system or programs store large amounts of data in the variable storage. All data needed for POST, such as UEFI BIOS setup settings, chipset, or platform configuration data, are stored in a separate UEFI variable storage. Press F1 after the error message is displayed to enter the UEFI BIOS menu. A dialog asks for confirmation to clean up the storage. If you select “Yes”, all data that were created by the operating system or programs will be deleted except global variables defined by the Unified Extensible Firmware Interface Specification. If you select “No”, all data will be kept, but the operating system or programs will not be able to create, modify, or delete data in the storage. If this error happens at a service center, Lenovo authorized service personnel will clean up the non-volatile system UEFI variable storage using the preceding solution.
Fan error. Press ESC to startup with limited performance	The thermal fan might not work correctly. After the error message is displayed, press ESC within five seconds to start up the computer with limited performance. Otherwise, the computer will shut down immediately. If the problem still exists when you starts up next time, have your computer serviced.

Beep errors

Lenovo SmartBeep technology enables you to decode beep errors with your smartphone when a black screen occurs with beeps from your computer. To decode the beep error with Lenovo SmartBeep technology:

1. Go to https://support.lenovo.com/smartbeep or scan the following QR Code.



2. Download the proper diagnostic app and install it on your smartphone.
3. Run the diagnostic app and place the smartphone near the computer.
4. Press Fn on your computer to emit the beep again. The diagnostic app decodes the beep error and shows possible solutions on the smartphone.

Note: Do not attempt to service a product yourself unless instructed to do so by the Customer Support Center or product documentation. Only use a Lenovo-authorized service provider to repair your product.

Self-help resources

Use the following self-help resources to learn more about the computer and troubleshoot problems.

Access product documentation

- *Safety and Warranty Guide*
- *Setup Guide*
- This *User Guide*
- *Regulatory Notice*

Visit the Lenovo support Web site

https://pcsupport.lenovo.com

- Drivers and software
- Diagnostic solutions
- Product and service warranty
- Product and parts details
- Knowledge base and frequently asked questions

Access the Lenovo Limited Warranty

This product is covered by the terms of the Lenovo Limited Warranty (LLW), version L505-0010-02 08/2011. You can view the LLW in a number of languages from the following Web site. Read the Lenovo Limited Warranty at:

https://www.lenovo.com/warranty/llw_02

The LLW also is preinstalled on the computer. To access the LLW, go to `/opt/lenovo`

If you cannot view the LLW either from the Web site or from your computer, contact your local Lenovo office or reseller to obtain a printed version of the LLW.

Access Linux distributions

Linux is an open-source operating system, and popular Linux distributions include Ubuntu and Fedora.

To learn more about the Ubuntu operating system, go to:

https://www.ubuntu.com

To learn more about the Fedora operating system, go to:

https://getfedora.org/

Get support information

If you need help, service, technical assistance, or more information about the Linux operating system or other applications, contact the provider of the Linux operating system or the provider of the application. If you need the service and support for hardware components shipped with your computer, contact Lenovo.

To access the latest *User Guide* and *Safety and Warranty Guide*, go to:

https://pcsupport.lenovo.com

Access open-source information

This device includes software made publicly available by Lenovo, including software licensed under the General Public License and/or the Lesser General Public License (the open source software).

You may obtain a copy of the corresponding source code for any such open source software licensed under the General Public License and/or the Lesser General Public License (or any other license requiring us to make a written offer to provide corresponding source code to you) from Lenovo for a period of three years without charge except for the cost of media, shipping, and handling, upon written request to Lenovo. This offer is valid to anyone in receipt of this Device.

You may send your request in writing to the address below accompanied by a check or money order for $15 to:

Lenovo Legal Department
Attn: Open Source Team / Source Code Requests
8001 Development Dr.
Morrisville, NC 27560

Please include the version of the OS and the version of the Linux Kernel pre-shipped on this Device as part of your request. Be sure to provide a return address.

The open source software is distributed in hope it will be useful, but WITHOUT ANY WARRANTY; without even the implied warranty of MERCHANTABILITY or FITNESS FOR A PARTICULAR PURPOSE. See for example the GNU General Public License and/or the Lesser General Public License for more information.

To view additional information regarding licenses, acknowledgments and required copyright notices for the open source software shipped on your Device, go to `/usr/share/licences/*`.

Call Lenovo

If you have tried to correct the problem yourself and still need help, you can call Lenovo Customer Support Center.

Before you contact Lenovo

Prepare the following before you contact Lenovo:

1. Record the problem symptoms and details:
   - What is the problem? Is it continuous or intermittent?
   - Any error message or error code?
   - What operating system are you using? Which version?
   - Which software applications were running at the time of the problem?
   - Can the problem be reproduced? If so, how?
2. Record the system information:
   - Product name
   - Machine type and serial number

The following illustration shows where to find the machine type and serial number of your computer.

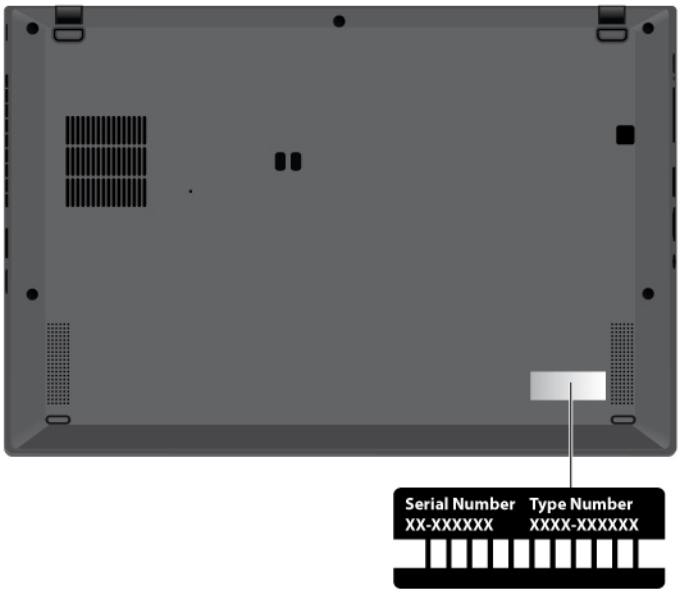

Lenovo Customer Support Center

During the warranty period, you can call Lenovo Customer Support Center for help.

Telephone numbers

For a list of the Lenovo Support phone numbers for your country or region, go to https://pcsupport.lenovo.com/supportphonelist for the latest phone numbers.

Note: Phone numbers are subject to change without notice. If the number for your country or region is not provided, contact your Lenovo reseller or Lenovo marketing representative.

Services available during the warranty period

- Problem determination - Trained personnel are available to assist you with determining if you have a hardware problem and deciding what action is necessary to fix the problem.
- Lenovo hardware repair - If the problem is determined to be caused by Lenovo hardware under warranty, trained service personnel are available to provide the applicable level of service.
- Engineering change management - Occasionally, there might be changes that are required after a product has been sold. Lenovo or your reseller, if authorized by Lenovo, will make selected Engineering Changes (ECs) that apply to your hardware available.

Services not covered

- Replacement or use of parts not manufactured for or by Lenovo or nonwarranted parts
- Identification of software problem sources
- Configuration of UEFI BIOS as part of an installation or upgrade
- Changes, modifications, or upgrades to device drivers
- Installation and maintenance of network operating systems (NOS)
- Installation and maintenance of programs

For the terms and conditions of the Lenovo Limited Warranty that apply to your Lenovo hardware product, go to:

- https://www.lenovo.com/warranty/llw_02
- https://pcsupport.lenovo.com/warrantylookup

Purchase additional services

During and after the warranty period, you can purchase additional services from Lenovo at https://pcsupport.lenovo.com/warrantyupgrade.

Service availability and service name might vary by country or region.

Appendix A. Compliance information

Note: For more compliance information, refer to *Safety and Compliance Guide* at https://pcsupport.lenovo.com.

Certification-related information

Product name	Compliance ID	Machine type(s)
• ThinkPad T14 Gen 1 • ThinkPad T14 Gen 1 LTE (for mainland China only)	• for Intel models: – TP00103E – TP00103E0* – TP00103E1* – TP00103E2* – TP00103F* – TP00103F0* – TP00103F1* – TP00103F2* • for AMD models: – TP00103G – TP00103G0* – TP00103G1* – TP00103G2*	• for Intel models: – 20S0, 20S1, 20S2 and 20S3 • for AMD models: – 20UD and 20UE
ThinkPad T15 Gen 1	• TP00104C • TP00104C0* • TP00104D* • TP00104D0*	20S6 and 20S7

© Copyright Lenovo 2020, 2022

• ThinkPad P14s Gen 1 • ThinkPad P14s Gen 1 LTE (for mainland China only)	• for Intel models: – TP00103E – TP00103E0* – TP00103E1* – TP00103E2* – TP00103F* – TP00103F0* – TP00103F1* – TP00103F2* • for AMD models: – TP00103H – TP00103H0* – TP00103H1* – TP00103H2*	• for Intel models: – 20S4 and 20S5 • for AMD models: – 20Y1 and 20Y2
ThinkPad P15s Gen 1	• TP00104C • TP00104C0* • TP00104D* • TP00104D0*	20T4 and 20T5

* for India only

Further compliance information related to your product is available at https://www.lenovo.com/compliance.

Locate the UltraConnect wireless antennas

Your computer has an UltraConnect™ wireless antenna system. You can enable wireless communication wherever you are.

The following illustration shows the antenna locations on your computer:



1. Wireless-LAN antenna (main)
2. Wireless-WAN antenna (main, for selected models)
3. Wireless-WAN antenna (auxiliary, for selected models)
4. Wireless-LAN antenna (auxiliary)
5. 4x4 MIMO Wireless-WAN antenna (auxiliary, for selected Intel models)
6. 4x4 MIMO Wireless-WAN antenna (main, for selected Intel models)

Operating environment

Maximum altitude (without pressurization)

3048 m (10 000 ft)

Temperature

- Operating: 5°C to 35°C (41°F to 95°F)
- Storage and transportation in original shipping package: -20°C to 60°C (-4°F to 140°F)
- Storage without package: 5°C to 43°C (41°F to 109°F)

Note: When you charge the battery, its temperature must be no lower than 10°C (50°F).

Relative humidity

- Operating: 8% to 95% at wet-bulb temperature 23°C (73°F)
- Storage and transportation: 5% to 95% at wet-bulb temperature 27°C (81°F)

Appendix B. Notices and trademarks

Notices

Lenovo may not offer the products, services, or features discussed in this document in all countries. Consult your local Lenovo representative for information on the products and services currently available in your area. Any reference to a Lenovo product, program, or service is not intended to state or imply that only that Lenovo product, program, or service may be used. Any functionally equivalent product, program, or service that does not infringe any Lenovo intellectual property right may be used instead. However, it is the user's responsibility to evaluate and verify the operation of any other product, program, or service.

Lenovo may have patents or pending patent programs covering subject matter described in this document. The furnishing of this document does not give you any license to these patents. You can send license inquiries, in writing, to:

Lenovo (United States), Inc.
8001 Development Drive
Morrisville, NC 27560
U.S.A.
Attention: Lenovo Director of Licensing

LENOVO PROVIDES THIS PUBLICATION "AS IS" WITHOUT WARRANTY OF ANY KIND, EITHER EXPRESS OR IMPLIED, INCLUDING, BUT NOT LIMITED TO, THE IMPLIED WARRANTIES OF NON-INFRINGEMENT, MERCHANTABILITY OR FITNESS FOR A PARTICULAR PURPOSE. Some jurisdictions do not allow disclaimer of express or implied warranties in certain transactions, therefore, this statement may not apply to you.

Changes are made periodically to the information herein; these changes will be incorporated in new editions of the publication. To provide better service, Lenovo reserves the right to improve and/or modify the products and software programs described in the manuals included with your computer, and the content of the manual, at any time without additional notice.

The software interface and function and hardware configuration described in the manuals included with your computer might not match exactly the actual configuration of the computer that you purchase. For the configuration of the product, refer to the related contract (if any) or product packing list, or consult the distributor for the product sales. Lenovo may use or distribute any of the information you supply in any way it believes appropriate without incurring any obligation to you.

The products described in this document are not intended for use in implantation or other life support applications where malfunction may result in injury or death to persons. The information contained in this document does not affect or change Lenovo product specifications or warranties. Nothing in this document shall operate as an express or implied license or indemnity under the intellectual property rights of Lenovo or third parties. All information contained in this document was obtained in specific environments and is presented as an illustration. The result obtained in other operating environments may vary.

Lenovo may use or distribute any of the information you supply in any way it believes appropriate without incurring any obligation to you.

Any references in this publication to non-Lenovo Web sites are provided for convenience only and do not in any manner serve as an endorsement of those Web sites. The materials at those Web sites are not part of the materials for this Lenovo product, and use of those Web sites is at your own risk.

© Copyright Lenovo 2020, 2022

Any performance data contained herein was determined in a controlled environment. Therefore, the result obtained in other operating environments may vary significantly. Some measurements may have been made on development-level systems and there is no guarantee that these measurements will be the same on generally available systems. Furthermore, some measurements may have been estimated through extrapolation. Actual results may vary. Users of this document should verify the applicable data for their specific environment.

This document is copyrighted by Lenovo and is not covered by any open source license, including any Linux agreement(s) which may accompany software included with this product. Lenovo may update this document at any time without notice.

For the latest information or any questions or comments, contact or visit the Lenovo Web site:

https://support.lenovo.com

Trademarks

LENOVO, LENOVO logo, THINKPAD, THINKPAD logo, TRACKPOINT, and ULTRACONNECT are trademarks of Lenovo. Intel, Intel Optane, and Thunderbolt are trademarks of Intel Corporation or its subsidiaries in the U.S. and/or other countries. Microsoft, Windows, Direct3D, BitLocker, and Cortana are trademarks of the Microsoft group of companies. Linux is the registered trademark of Linus Torvalds in the U.S. and other countries. Ubuntu is a registered trademark of Canonical Ltd. “Fedora” is a registered trademark of Red Hat, Inc. The terms HDMI and HDMI High-Definition Multimedia Interface are trademarks or registered trademarks of HDMI Licensing LLC in the United States and other countries. Wi-Fi, Wi-Fi Alliance, and Miracast are registered trademarks of Wi-Fi Alliance. USB-C is a trademark of USB Implementers Forum. All other trademarks are the property of their respective owners.


Lenovo