P348
User Guide



Read this first

Before using this documentation and the product it supports, ensure that you read and understand the following:

- *Safety and Warranty Guide*
- *Generic Safety and Compliance Notices*
- *Setup Guide*

Second Edition (January 2023)

© Copyright Lenovo 2021, 2023.

LIMITED AND RESTRICTED RIGHTS NOTICE: If data or software is delivered pursuant to a General Services Administration “GSA” contract, use, reproduction, or disclosure is subject to restrictions set forth in Contract No. GS-35F-05925.

Contents

Discover your Lenovo computer iii

Chapter 1. Meet your computer 1

Front 1
Rear 2
Features and specifications 3
USB specifications 4

Chapter 2. Get started with your computer 5

Get started with Ubuntu Desktop 5
Access networks 5
Connect to the wired Ethernet 5
Connect to Wi-Fi networks (for selected models) 5
Connect an external display 6
Manage cables with a smart cable clip 6

Chapter 3. Explore your computer . . . 7

Set the power plan 7
Transfer data 7
Connect to a Bluetooth-enabled device (for selected models) 7
Use the optical drive (for selected models) . . . 8
Use a media card (for selected models) 8
Purchase accessories 8

Chapter 4. Secure your computer and information 9

Lock the computer 9
UEFI BIOS passwords 10
Use BIOS security solutions 11
Erase all storage drive data 11
Cover presence switch 12
Intel BIOS guard 12
Smart USB Protection 12

Chapter 5. UEFI BIOS 13

What is UEFI BIOS 13
Enter the BIOS menu 13
Navigate in the BIOS interface 13
Change the display language of UEFI BIOS 13
Change the display mode of UEFI BIOS (for selected models) 14
Set the system date and time 14
Change the boot priority order 14
Enable or disable the configuration change detection feature 15
Enable or disable the automatic power-on feature 15
Enable or disable the smart power-on feature (for selected models) 15
Change the ITS performance mode 15
Change BIOS settings before installing a new operating system 16
Update UEFI BIOS 16
Recover from a BIOS update failure 16
Clear CMOS 17

Chapter 6. Troubleshooting, diagnostics, and recovery 19

Basic procedure for resolving computer problems 19
Troubleshooting 19
Startup problems 19
Audio problems 20
Network problems 20
Performance problems 21
Storage drive problems 21
CD or DVD problems 22
Serial connector problems 23
USB device problems 23
Software problems 23
Lenovo diagnostic tools 23

Chapter 7. CRU replacement 25

CRU list 25
Remove or replace a CRU 26
Computer cover 26
Slim optical drive 27
Front bezel 29
Primary storage drives 30
3.5-inch primary storage drive cage 36
PCI-Express card 36
Graphics card 37
M.2 solid-state drive and heat sink 41
M.2 solid-state drive bracket 42
Slim-optical-drive cage 43
Secondary storage drive 45
Front fan 47
Rear fan 48
Heat-sink-and-fan assembly 50
Chassis beam 52
Memory module 54
Coin-cell battery 55
Power supply assembly 56

© Copyright Lenovo 2021, 2023

E-lock 57

Chapter 8. Help and support 59
Self-help resources 59
Call Lenovo 60
Before you contact Lenovo 60
Lenovo Customer Support Center 60
Purchase additional services 61

Appendix A. System memory speed 63

Appendix B. Supplemental information about the Ubuntu operating system 65

Appendix C. Compliance information 67

Appendix D. Notices and trademarks 69

Discover your Lenovo computer

Thank you for choosing a Lenovo computer! We are dedicated to delivering the best solution to you.

Before starting your tour, please read the following information:

- Illustrations in this documentation might look different from your product.
- Depending on the model, some optional accessories, features, software programs, and user interface instructions might not be applicable to your computer.
- Documentation content is subject to change without notice. To get the latest documentation, go to https://pcsupport.lenovo.com.

© Copyright Lenovo 2021, 2023

Chapter 1. Meet your computer

Front

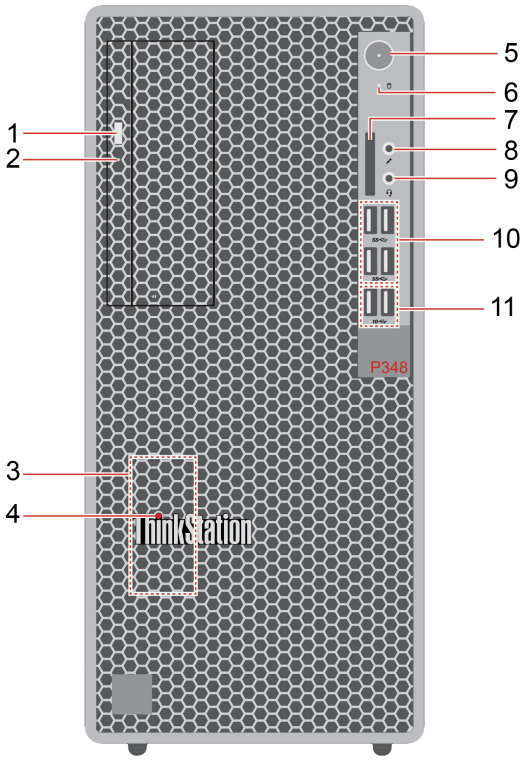

Item	Description	Item	Description
1	Optical drive eject button*	2	Optical drive activity indicator*
3	Internal speaker	4	ThinkStation® LED
5	Power button with power indicator	6	Storage drive activity indicator
7	SD-card slot	8	Microphone connector
9	Headset connector	10	USB 3.2 connectors Gen 1
11	USB 3.2 connectors Gen 2		

* for selected models

Power indicator

Show the system status of your computer.

- **On:** The computer is starting up or working.
- **Off:** The computer is off or in hibernation mode.
- **Blinking:** The computer is in sleep mode.

© Copyright Lenovo 2021, 2023

Rear

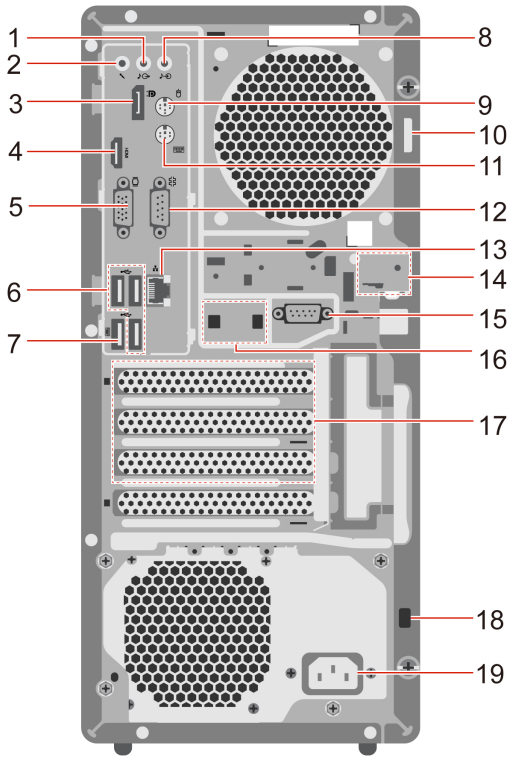

Item	Description	Item	Description
1	Audio line-out connector	2	Microphone connector
3	DisplayPort™ out connector	4	HDMI™ out connector
5	VGA-out connector	6	USB 2.0 connectors
7	USB 2.0 connector (with smart power-on feature)	8	Audio line-in connector
9	PS/2 mouse connector*	10	Padlock loop
11	PS/2 keyboard connector*	12	Serial connector
13	Ethernet connector	14	E-lock slots
15	Serial connector*	16	Smart cable clip slots
17	PCI-Express card area	18	Security-lock slot
19	Power cord connector		

* for selected models

Serial connector

Connect an external modem, a serial printer, or other devices that use a serial connector.

Features and specifications

For detailed specifications of your computer, go to https://psref.lenovo.com.

Dimensions	• Width: 170 mm (6.7 inches) • Height: 376 mm (14.8 inches) • Depth: 315.4 mm (12.4 inches)
Weight (without packaging)	Maximum configuration as shipped: 8.4 kg (18.5 lb)
Hardware configuration	1. Open the system menu from the top-right corner and click **Settings**. 2. Click **About**.
Power supply	• 300-watt automatic voltage-sensing power supply • 500-watt automatic voltage-sensing power supply
Electrical input	• Input voltage: From 100 V ac to 240 V ac • Input frequency: 50/60 Hz
Microprocessor	To view the microprocessor information of your computer, enter **Settings** and click **About**.
Memory	Up to four double data rate 4 (DDR4) non-error correction code (non-ECC) unbuffered dual inline memory modules (UDIMMs) Maximum memory capacity: 128 GB Memory quantity: 1pc, 2pcs or 4pcs
Storage device	• 2.5-inch hard disk drive* • 3.5-inch hard disk drive* • M.2 solid-state drive* To view the storage drive capacity of your computer, use the **Disks** application. **Note:** The storage drive capacity indicated by the system is less than the nominal capacity.
Video features	• The integrated graphics card supports the following: – DisplayPort out connector – HDMI out connector – VGA-out connector • The optional discrete graphics card provides an enhanced video experience and extended capabilities.

Expansion	• Memory slots • M.2 solid-state drive slot • Slim-optical-drive cage* • PCI-Express x1 card slots • PCI-Express x16 card slot • SD-card slot (supporting SD card reader*) • Storage drive cages
Network features	• Bluetooth* • Ethernet LAN • Wireless LAN*

* for selected models

USB specifications

Note: Depending on the model, some USB connectors might not be available on your computer.

Connector name	Description
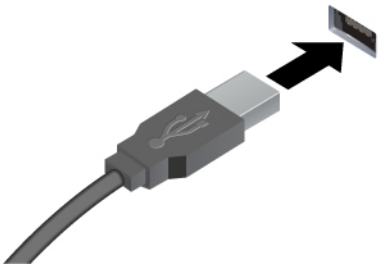 • USB 2.0 connector • SS USB 3.2 connector Gen 1 • 10 USB 3.2 connector Gen 2	Connect USB-compatible devices, such as a USB keyboard, USB mouse, USB storage device, or USB printer.

Statement on USB transfer rate

Depending on many factors such as the processing capability of the host and peripheral devices, file attributes, and other factors related to system configuration and operating environments, the actual transfer rate using the various USB connectors on this device will vary and will be slower than the data rate listed below for each corresponding device.

USB device	Data rate (Gbit/s)
3.2 Gen 1 / 3.1 Gen 1	5
3.2 Gen 2 / 3.1 Gen 2	10
3.2 Gen 2 × 2	20
Thunderbolt® 3	40
Thunderbolt 4	40

Chapter 2. Get started with your computer

Get started with Ubuntu Desktop

Learn the basics of Ubuntu and start working with it right away. For more information about Ubuntu, see the Ubuntu documentation site at: https://help.ubuntu.com/lts/ubuntu-help/index.html.

The Gnome desktop is installed by default and is designed to be simple and easy to use. Details on using Gnome are available by launching the Help application or online at https://help.gnome.org/users/.

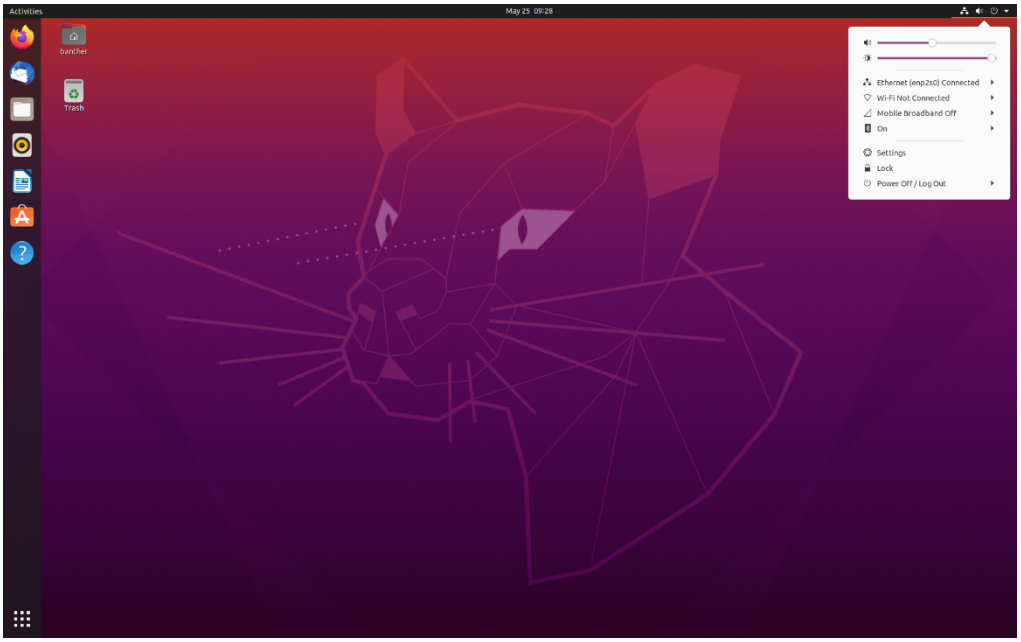

Launch an app

- Press the Super key (with the Windows logo) or open the Activities menu on the top left and type in the name of the application you want to launch.
- Click the **Show Applications** button on the lower left, and select the application you want to launch.

Launch settings

Open the system menu from the top-right corner and click **Settings**.

Access networks

This section helps you access networks through connecting to a wired or wireless network.

Connect to the wired Ethernet

Connect your computer to a local network through the Ethernet connector on your computer with an Ethernet cable.

Connect to Wi-Fi networks (for selected models)

If your computer includes a wireless LAN module, you can connect your computer to Wi-Fi®networks.

© Copyright Lenovo 2021, 2023

1. Open the system menu from the top-right corner and expand the Wi-Fi section of the menu.
2. Click **Select Network**. A list of available wireless networks is displayed.
3. Select a network available for connection. Provide required information, if needed.

Connect an external display

Connect a projector or a monitor to your computer to give presentations or expand your workspace.

Change display settings

Right-click a blank area on the desktop and select **Display settings**. Then, you can change display settings as you prefer.

Manage cables with a smart cable clip

Note: You can purchase a smart cable clip from Lenovo.

To manage cables of devices (such as the keyboard and the mouse) with a smart cable clip:

1. Pull the cables through the dents in the clip.
2. Install the clip as shown.

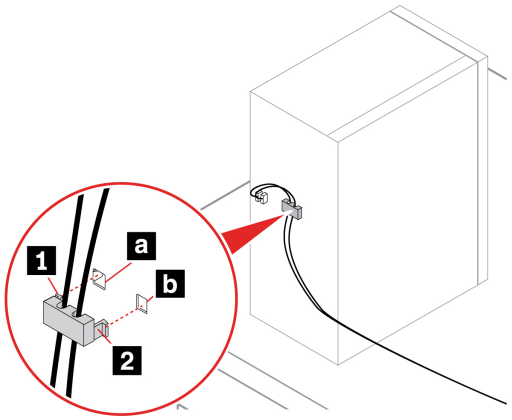

Chapter 3. Explore your computer

Set the power plan

For ENERGY STAR® compliant computers, the following power plan takes effect when your computers have been idle for a specified duration:

- turn off the display: After 5 minutes
- put the computer to sleep: After 20 minutes

To awaken the computer from Sleep mode, press any key on your keyboard.

To reset the power plan to achieve the best balance between performance and power saving:

1. Open the system menu from the top-right corner and click **Settings**.
2. Click **Power**.
3. Choose or customize a power plan of your preference.

Transfer data

Quickly share your files using the built-in Bluetooth technology among devices with the same features. You also can install a disc or media card to transfer data.

Connect to a Bluetooth-enabled device (for selected models)

You can connect all types of Bluetooth-enabled devices to your computer, such as a keyboard, a mouse, a smartphone, or speakers. Place the device that you are attempting to connect to less than 10 meters (33 feet) from the computer.

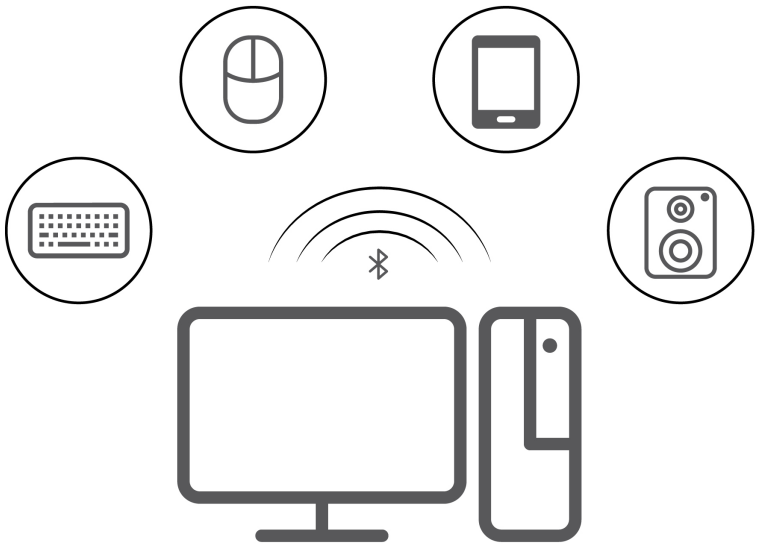

1. Turn on Bluetooth on the computer.
   a. Open the system menu from the top-right corner and then click **Settings → Bluetooth**.
   b. In the Bluetooth section enable Bluetooth with the toggle button at the top.

© Copyright Lenovo 2021, 2023

2. Any discoverable devices will be shown in the **Devices** list.
3. Select a Bluetooth device, and then follow the on-screen instructions.

Use the optical drive (for selected models)

If your computer has an optical drive, read the following information.

Install or remove a disc

1. With the computer on, press the eject button on the optical drive. The tray slides out of the drive.
2. Insert a disc into the tray or remove a disc from the tray, and then push the tray back into the drive.

Note: If the tray does not slide out of the drive when you press the eject button, turn off the computer. Then, insert a straightened paper clip into the emergency-eject hole adjacent to the eject button. Use the emergency eject only in an emergency.

Record a disc

1. Insert a recordable disc into the optical drive that supports recording.
2. In the **Blank CD/DVD-R Disc** notification that pops up at the bottom of the screen, select **Open with CD/DVD Creator**.
3. Follow the on-screen instructions.

Use a media card (for selected models)

If your computer has an SD-card slot, read the following information.

Install a media card

1. Locate the SD-card slot.
2. Ensure that the metal contacts on the card are facing the ones in the SD-card slot. Insert the card firmly into the SD-card slot until it is secured in place.

Remove a media card

Attention: Before removing a media card, unmount the card from the operating system first. Otherwise, data on the card might get corrupted or lost.

1. Launch the **Files** application.
2. Select the unmount icon next to the card and unmount the card from the operating system.
3. Press the card and remove it from your computer. Store the card safely for future use.

Purchase accessories

Lenovo has a number of hardware accessories and upgrades to help expand the capabilities of your computer. Options include memory modules, storage devices, network cards, power adapters, keyboards, mice, and more.

To shop at Lenovo, go to https://www.lenovo.com/accessories.

Chapter 4. Secure your computer and information

Lock the computer

Note: Lenovo makes no comments, judgments, or warranties about the function, quality, or performance of the locking device and security feature. You can purchase computer locks from Lenovo.

Padlock

Locking the computer cover through a padlock prevents unauthorized access to the inside of your computer.

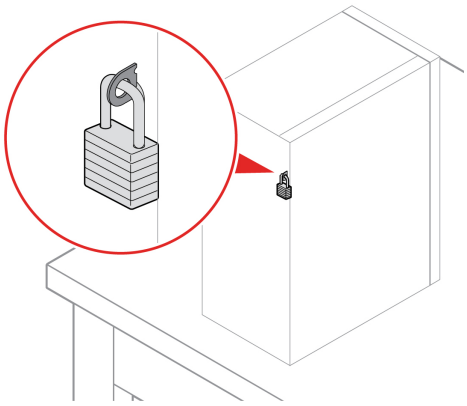

Kensington-style cable lock

Lock your computer to a desk, table, or other fixtures through a Kensington-style cable lock.

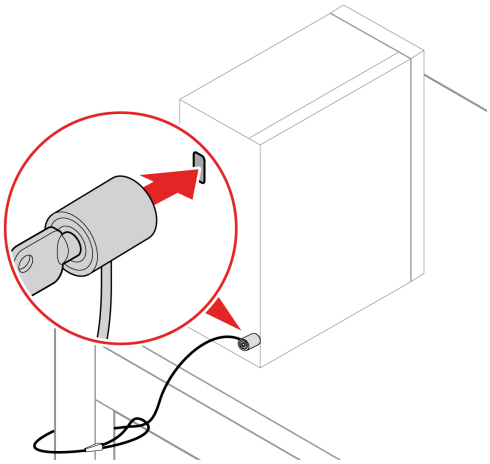

© Copyright Lenovo 2021, 2023

E-lock

Your computer might have a security lock solution installed to protect the computer from unauthorized tampering of the internal components. Using the E-Lock, you can mechanically lock or unlock the computer cover.

To enable or disable the E-Lock:

1. Restart the computer. When the logo screen is displayed, press F1 or Fn+F1.
2. Select **Security → Electronic Lock** to enable or disable the E-lock.
3. Press F10 or Fn+F10 to save the changes and exit. Your computer will restart automatically and then changes take effect.

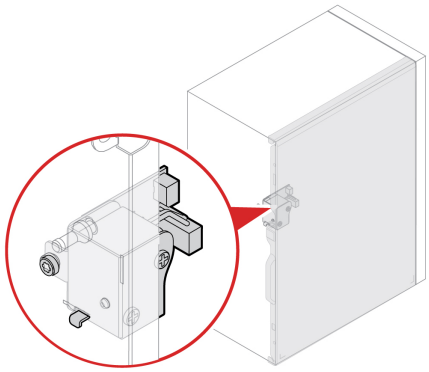

UEFI BIOS passwords

You can set passwords in UEFI (Unified Extensible Firmware Interface) BIOS (Basic Input/Output System) to strengthen the security of your computer.

Password types

You can set a power-on password, supervisor password, system management password, or hard disk password in UEFI BIOS to prevent unauthorized access to your computer. However, you are not prompted to enter any UEFI BIOS password when your computer resumes from sleep mode.

- Power-on password

  When a power-on password is set, you are prompted to enter a valid password each time the computer is turned on.

- Supervisor password

  Setting a supervisor password deters unauthorized users from changing configuration settings. If you are responsible for maintaining the configuration settings of several computers, you might want to set a supervisor password.

  When a supervisor password is set, you are prompted to enter a valid password each time you try to enter the BIOS menu.

  If both the power-on password and supervisor password are set, you can enter either password. However, you must use your supervisor password to change any configuration settings.

- Hard disk password

  Setting a hard disk password prevents unauthorized access to the data on the storage drive. When a hard disk password is set, you are prompted to enter a valid password each time you try to access the storage drive.

Note: After you set a hard disk password, your data on the storage drive is protected even if the storage drive is removed from one computer and installed in another.

- System management password (for selected models)

  You can enable the system management password to have the same authority as the supervisor password to control security related features. To customize the authority of the system management password through the UEFI BIOS menu:

  1. Restart the computer. When the logo screen is displayed, press F1 or Fn+F1.
  2. Select **Security → System Management Password Access Control**.
  3. Follow the on-screen instructions.

  If you have set both the supervisor password and the system management password, the supervisor password overrides the system management password.

Set, change, and remove a password

Before you start, print these instructions.

1. Restart the computer. When the logo screen is displayed, press F1 or Fn+F1.
2. Select **Security**.
3. Depending on the password type, select **Set Supervisor Password**, **Set Power-On Password**, **Set System Management Password**, or **Hard Disk Password** and press Enter.
4. Follow the on-screen instructions to set, change, or remove a password.
5. Press F10 or Fn+F10 to save the changes and exit.

You should record your passwords and store them in a safe place. If you forget the passwords, contact a Lenovo-authorized service provider to have the passwords removed.

Note: If the hard disk password is forgotten, Lenovo cannot remove the password or recover data from the storage drive.

Use BIOS security solutions

This section provides BIOS solutions to secure your computer and information.

Erase all storage drive data

It is recommended that you erase all storage drive data before recycling a storage drive or the computer.

To erase all storage drive data:

1. Set a hard disk password for the storage drive you will recycle. See “UEFI BIOS passwords” on page 10.
2. Restart the computer. When the logo screen is displayed, press F1 or Fn+F1.
3. Select **Security → Hard Disk Password → Security Erase HDD Data** and press Enter.
4. Select the storage drive you will recycle and press Enter.
5. A message is displayed, prompting you to confirm the operation. Select **Yes** and press Enter. The erasing process begins.

   Note: During the erasing process, the power button and the keyboard are disabled.
6. After the erasing process is completed, a message is displayed, prompting you to reset the system. Select **Continue**.

   Note: Depending on the storage drive capacity, the erasing process will take half an hour to three hours.
7. After the resetting process is completed, one of the following will happen:

- If the data on the system storage drive is erased, you will be prompted that no operating system is available.
- If the data on the non-system storage drive is erased, the computer restarts automatically.

Cover presence switch

The cover presence switch prevents the computer from logging in to the operating system when the computer cover is not properly installed or closed.

To enable the cover presence switch connector on the system board:

1. Restart the computer. When the logo screen is displayed, press F1 or Fn+F1.
2. Select **Security → Cover Tamper Detected** and press Enter.
3. Select **Enabled** and press Enter.
4. Press F10 or Fn+F10 to save the changes and exit.

If the cover presence switch is enabled and the computer cover is not correctly installed or closed, an error message will be displayed when you turn on the computer. To bypass the error message and log in to the operating system:

1. Properly install or close the computer cover.
2. Enter the BIOS menu, save and then exit.

Intel BIOS guard

The Intel BIOS Guard module cryptographically verifies all BIOS updates. This hardware-based security helps prevent software and malware attacks on the computers BIOS.

Smart USB Protection

The Smart USB Protection function is a security function that helps prevent data from being copied from the computer to USB storage devices connected to the computer. You can set the Smart USB Protection function to one of the following modes:

- **Disabled** (default setting): You can use the USB storage devices without limitation.
- **Read Only**: You cannot copy data from the computer to the USB storage devices. However, you can access or modify data on the USB storage devices.
- **No Access**: You cannot access the USB storage devices from the computer.

To configure the Smart USB Protection function:

1. Restart the computer. When the logo screen is displayed, press F1 or Fn+F1.
2. Select **Security → Smart USB Protection** and press Enter.
3. Select the desired setting and press Enter.
4. Press F10 or Fn+F10 to save the changes and exit.

Chapter 5. UEFI BIOS

This chapter provides information about configuring and updating UEFI BIOS, and clearing CMOS.

What is UEFI BIOS

Note: The operating system settings might override any similar settings in UEFI BIOS.

UEFI BIOS is the first program that the computer runs when the computer is turned on. UEFI BIOS initializes the hardware components and loads the operating system and other programs. Your computer comes with a setup program with which you can change UEFI BIOS settings.

Enter the BIOS menu

Restart the computer. When the logo screen is displayed, press F1 or Fn+F1 to enter the BIOS menu.

Note: If you have set BIOS passwords, enter the correct passwords when prompted. You also can select **No** or press Esc to skip the password prompt and enter the BIOS menu. However, you cannot change the system configurations that are protected by passwords.

Navigate in the BIOS interface

Attention: The default configurations are already optimized for you in **boldface**. Improper change of the configurations might cause unexpected results.

Depending on your keyboard, you can navigate in the BIOS interface by pressing the following keys, or combinations of Fn and the following keys:

Key	Function
F1 or Fn+F1	General Help
Esc or Fn+Esc	Exit the submenu
↑ ↓ or Fn+↑ ↓	Locate an item
← → or Fn+← →	Move keyboard focus
+/– or Fn++/–	Change value
Enter	Enter the submenu
F9 or Fn+F9	Setup Defaults
F10 or Fn+F10	Save and exit

Change the display language of UEFI BIOS

UEFI BIOS supports three or four display languages: English, French, simplified Chinese, and Russian (for selected models).

To change the display language of UEFI BIOS:

1. Select **Main → Language** and press Enter.
2. Set the display language as desired.

© Copyright Lenovo 2021, 2023

Change the display mode of UEFI BIOS (for selected models)

You can use UEFI BIOS in the graphic mode or the text mode according to your needs.

The keys on the keyboard used to perform various tasks are displayed at the bottom of the screen. In addition to the keyboard, you also can use the mouse to make selections.

To change the display mode of UEFI BIOS:

1. Restart the computer. When the logo screen is displayed, press F1 or Fn+F1.
2. Select **Main → Setup Mode Select** and press Enter.
3. Set the display mode as desired.

Set the system date and time

1. Restart the computer. When the logo screen is displayed, press F1 or Fn+F1.
2. Select **Main → System Time & Date** and press Enter.
3. Set the system date and time as desired.
4. Press F10 or Fn+F10 to save the changes and exit.

Change the boot priority order

If the computer does not boot from a device as expected, you can change the boot priority order permanently or select a temporary boot device.

Change the boot priority order permanently

1. Depending on the type of the storage device, do one of the following:
   - If the storage device is internal, go to step 2.
   - If the storage device is a disc, ensure that the computer is on or turn on the computer. Then, insert the disc into the optical drive.
   - If the storage device is an external device other than a disc, connect the storage device to the computer.
2. Restart the computer. When the logo screen is displayed, press F1 or Fn+F1.
3. Select **Startup → Boot Priority Order**, and then follow the on-screen instructions to change the boot priority order.
4. You can also select the first priority device group by selecting **Startup → First Boot Device**, and then follow the on-screen instructions to select the first boot device within this group. Your computer will boot from the first boot device before trying the boot priority order you set in the previous step.
5. Press F10 or Fn+F10 to save the changes and exit.

Select a temporary boot device

Note: Not all discs and storage drives are bootable.

1. Depending on the type of the storage device, do one of the following:
   - If the storage device is internal, go to step 2.
   - If the storage device is a disc, ensure that the computer is on or turn on the computer. Then, insert the disc into the optical drive.
   - If the storage device is an external device other than a disc, connect the storage device to the computer.

2. Restart the computer. When the logo screen is displayed, press F12 or Fn+F12.
3. Select the storage device as desired and press Enter.

If you want to change the boot priority order permanently, select **Enter Setup** on Startup Device Menu and press Enter to enter the BIOS menu.

Enable or disable the configuration change detection feature

If you enable configuration change detection, when the POST detects configuration changes of some hardware devices (such as storage drives or memory modules), an error message will be displayed when you turn on the computer.

To enable or disable the configuration change detection feature:

1. Restart the computer. When the logo screen is displayed, press F1 or Fn+F1.
2. Select **Security → Configuration Change Detection** and press Enter.
3. Enable or disable the feature as desired.
4. Press F10 or Fn+F10 to save the changes and exit.

To bypass the error message and log in to the operating system, press F2 or Fn+F2. To clear the error message, enter the BIOS menu, save and then exit.

Enable or disable the automatic power-on feature

The Automatic Power On item in UEFI BIOS provides various options for you to make your computer start up automatically.

To enable or disable the automatic power-on feature:

1. Restart the computer. When the logo screen is displayed, press F1 or Fn+F1.
2. Select **Power → Automatic Power On** and press Enter.
3. Select the feature as desired and press Enter.
4. Enable or disable the feature as desired.
5. Press F10 or Fn+F10 to save the changes and exit.

Enable or disable the smart power-on feature (for selected models)

Ensure that the keyboard is connected to a USB connector supporting the smart power-on feature. With the smart power-on feature enabled, you can start up or wake up the computer from the hibernation mode by pressing Alt+P.

To enable or disable the smart power-on feature:

1. Restart the computer. When the logo screen is displayed, press F1 or Fn+F1.
2. Select **Power → Smart Power On** and press Enter.
3. Enable or disable the feature as desired.
4. Press F10 or Fn+F10 to save the changes and exit.

Change the ITS performance mode

You can adjust the acoustic and thermal performance of your computer by changing the ITS performance mode. Three choices are available:

- **Best Performance** (default setting): The computer works at the best system performance with normal acoustic level.
- **Best Experience**: The computer works at the best experience with balanced noise and better performance.
- **Full Speed**: All fans in the computer will run at full speed.

To change the ITS performance mode:

1. Restart the computer. When the logo screen is displayed, press F1 or Fn+F1.
2. Select **Power → Intelligent Cooling** and press Enter.
3. Select **Performance Mode** and press Enter.
4. Set the performance mode as desired.
5. Press F10 or Fn+F10 to save the changes and exit.

Change BIOS settings before installing a new operating system

BIOS settings vary by operating system. Change the BIOS settings before installing a new operating system.

To change the BIOS settings:

1. Restart the computer. When the logo screen is displayed, press F1 or Fn+F1.
2. From the main interface, select **Security → Secure Boot** and press Enter.
3. Depending on the operating system to be installed, do one of the following:
   - To install the Windows 10 (64-bit) and most of Linux operating system, select **Enabled** for **Secure Boot**.
   - To install an operating system that does not support secure boot, select **Disabled** for **Secure Boot**.
4. Press F10 or Fn+F10 to save the changes and exit.

Update UEFI BIOS

When you install a new program, device driver, or hardware component, you might need to update UEFI BIOS. You can update the BIOS from your operating system or a flash update disc (supported only on selected models).

Download and install the latest UEFI BIOS update package by one of the following methods:

- Using the built-in software update service:

  Ubuntu software update will check the LVFS site for any firmware updates and notify you when updates are available.
- From the Lenovo Support Web site:
  1. Go to https://pcsupport.lenovo.com.
  2. Download the flash BIOS update driver for the operating system version or the ISO image version (used to create a flash update disc). Then, download the installation instructions for the flash BIOS update driver you have downloaded.
  3. Print the installation instructions and follow the instructions to update the BIOS.

Recover from a BIOS update failure

1. Remove all media from the drives and turn off all connected devices.
2. Insert the BIOS update disc into the optical drive, and then turn off the computer.

3. Disconnect all power cords from electrical outlets. Then, remove any parts that impede access to the Clear CMOS /Recovery jumper.
4. Move the jumper from the standard position to the maintenance position.
5. Reconnect the power cords for the computer and the monitor to electrical outlets.
6. Turn on the computer and the monitor. When the computer beeps, the recovery process begins.
7. After the recovery process is completed, the computer will be turned off automatically.

   Note: Depending on the computer model, the recovery process will take two to three minutes.
8. Disconnect all power cords from electrical outlets.
9. Move the jumper back to the standard position.
10. Reinstall all the parts that have been removed. Then, reconnect the power cords for the computer and the monitor to electrical outlets.
11. Turn on the computer and the monitor. When the logo screen is displayed, press F1 or Fn+F1.
12. To prevent data loss, ensure that BIOS settings are restored to an earlier point. For BIOS configurations, see Chapter 5 “UEFI BIOS” on page 13.

Clear CMOS

1. Remove all media from the drives and turn off all connected devices and the computer.
2. Disconnect all power cords from electrical outlets. Then, remove any parts that impede access to the Clear CMOS /Recovery jumper.
3. Move the jumper from the standard position to the maintenance position.
4. Reconnect the power cords for the computer and the monitor to electrical outlets.
5. Turn on the computer and the monitor. When the computer beeps, wait for approximately 10 seconds.
6. Turn off the computer by holding the power button for approximately four seconds.
7. Disconnect all power cords from electrical outlets.
8. Move the jumper back to the standard position.
9. Reinstall all the parts that have been removed. Then, reconnect the power cords for the computer and the monitor to electrical outlets.
10. Turn on the computer and the monitor. When the logo screen is displayed, press F1 or Fn+F1.
11. To prevent data loss, ensure that BIOS settings are restored to an earlier point. For BIOS configurations, see Chapter 5 “UEFI BIOS” on page 13.

Chapter 6. Troubleshooting, diagnostics, and recovery

This chapter provides solutions to resolve computer problems. Use the basic procedure as a starting point for resolving computer problems.

Basic procedure for resolving computer problems

Prerequisite

Before you start, read *Generic Safety and Compliance Notices*, and print the following instructions.

1. Check that:
   a. The cables for all connected devices are connected correctly and securely.
   b. All components have been reassembled correctly.
   c. All connected devices that require ac power are connected to properly grounded and working electrical outlets.
   d. All connected devices are enabled in UEFI BIOS.
2. Use an antivirus program (if any) to see if the computer has been infected by a virus. If the program detects a virus, remove the virus.
3. See Chapter 6 “Troubleshooting, diagnostics, and recovery” on page 19 to resolve the problem you are experiencing, run the diagnostic program, and recover your operating system.
4. If the problem persists, contact Lenovo. See Chapter 8 “Help and support” on page 59.

Troubleshooting

Use the troubleshooting information to find solutions to problems that have definite symptoms.

Startup problems

Problem	Solution
The computer does not start up when you press the power button.	• Ensure that the power cord is correctly connected to the rear of the computer and to a working electrical outlet. • If the computer has a secondary power switch on the rear of the computer, ensure that it is switched on. • The power indicator on the front of the computer is on. • The computer voltage matches the voltage available at the electrical outlet for your country or region.
The operating system does not start up from the correct storage drive or fails to start up	• Ensure that all storage drive signal cables and power cables are connected correctly. • Ensure that the storage drive the computer starts up from is listed as the first startup device in UEFI BIOS. • In rare cases, the storage drive with the operating system might get corrupted or damaged. In such cases, you might need to replace the storage drive. • Optane memory currently is not supported with Linux.
The computer beeps multiple times before the operating system starts up.	Ensure that no keys are stuck.

© Copyright Lenovo 2021, 2023

Audio problems

Problem	Solution
The sound comes from one of the external speakers.	• Ensure that the speaker cable is inserted completely into the connector on the computer. • Ensure that the cable that connects the left speaker to the right speaker is securely connected. • Ensure that the balance settings are set correctly.

Network problems

Note: The Wi-Fi® and Bluetooth features are optional.

Problem	Solution
The computer cannot connect to an Ethernet LAN.	• Connect the cable from the Ethernet connector to the RJ45 connector of the hub. • Enable the Ethernet LAN feature in UEFI BIOS. • Enable the Ethernet LAN adapter. 1. Go to **Settings** and select **Network**. 2. Ensure the **Ethernet** option is enabled. • Update or reinstall the Ethernet LAN driver. • Install all networking software that is necessary for your network environment. Check with your LAN administrator for the necessary networking software. • Set the same duplex for the switch port and the adapter. If you configured the adapter for full duplex, ensure that the switch port is also configured for full duplex. Setting a wrong duplex mode might degrade performance, cause data loss, or result in lost connections.
When a Gigabit Ethernet model computer is used at a speed of 1000 Mbps, the Ethernet LAN connection fails or errors occur.	Connect the network cable to the Ethernet connector using Category 5 wiring and a 100 BASE-T hub/switch (not 100 BASE-X).
The Wake On LAN (WOL) feature does not work.	Enable the Wake On LAN feature in UEFI BIOS.
The Wi-Fi feature does not work.	• Enable the Wi-Fi feature in UEFI BIOS. • Enable all Wi-Fi devices. 1. Launch **Settings** and choose **Wi-Fi**. 2. Make sure that Wi-Fi is enabled by the toggle at the top. 3. Select the settings cog next to each Wi-Fi device, and make sure that it is configured and enabled. • Update or reinstall the Wi-Fi driver.

Problem	Solution
The Bluetooth feature does not work.	• Enable the Bluetooth feature in UEFI BIOS. • Enable all Bluetooth devices. 1. Launch **Settings** and choose **Bluetooth**. 2. Make sure that Bluetooth is enabled by the toggle at the top. 3. Click on each device to enable and start pairing. • Update or reinstall the Bluetooth driver.
Sound does not come from the Bluetooth headset or headphones.	Select the Bluetooth headset or headphones as the default audio output device in advanced sound settings.

Performance problems

Problem	Solution
The free storage drive space is insufficient.	• Clean out your Inbox, Sent Items, and Deleted Items folders from your e-mail application. • Clean up your C drive. 1. Launch the **Disk Usage Analyzer** application. 2. Select the drive to analyze. 3. Use the results to track down where your space is being used and clean up appropriately.
The free memory space is insufficient.	• Launch the **System Monitor** application. • Use the Memory column to determine which processes are using memory and can be ended.

Storage drive problems

Problem	Solution
Some or all storage drives are missing from the BIOS menu.	• Ensure that the signal cables and power cables for all the storage drives are connected correctly. • Ensure that the computer is configured correctly to support the storage drives. – If the computer is installed with SATA storage drives, ensure that the SATA storage drive enablement module (one to five storage drives) is installed. – If the computer is installed with SAS storage drives, ensure that the SAS storage drive enablement module (one to five storage drives) or the LSI MegaRAID SAS adapter is installed.

CD or DVD problems

Problem	Solution
A CD or DVD does not work.	• Ensure that the optical drive supports the CD or DVD. • Ensure that the disc is inserted correctly, with its label up. • Ensure that the disc you are using is clean. To remove dust or fingerprints, wipe the disc clean with a soft cloth from the center to the outside. Wiping a disc in a circular motion might cause loss of data. • Ensure that the power cable and signal cable are securely connected to the drive. • Ensure that the disc you are using is not scratched or damaged. Try inserting another disc that you know works. • If you have multiple CD or DVD drives installed (or a combination of CD and DVD drives), try inserting the disc into the other drive. In some cases, only one of the drives is connected to the audio subsystem.
A bootable recovery medium, such as the Product Recovery CD, cannot be used to start your computer.	Ensure that the CD or DVD drive is set as the top priority of the boot priority order in UEFI BIOS. **Note:** On some computer models, the startup sequence is permanently set and cannot be changed.
A black screen is displayed instead of the DVD video.	• Restart the DVD player program. • Try a lower screen resolution or color depth. • Close any open files, and then restart the computer.
A DVD movie does not play.	• Ensure that the disc surface is clean and not scratched. • Check the disc or packaging for regional coding. You might need to purchase a disc with coding for the region where you are using the computer.
No audio or only an intermittent audio comes out while a DVD movie is playing.	• Check the volume control settings on the computer and on your speakers. • Ensure that the disc surface is clean and not scratched. • Check all cable connections to and from the speakers. • Use the DVD menu for the video to select a different audio track.
The playback is slow or choppy.	• Disable any background programs that are using CPU or memory resources. • Ensure that video resolution is less than 1152 x 864 pixels.
A message indicating invalid disc or no disc found is displayed.	• Ensure that the disc is in the drive with the shiny side of the disc facing down. • Ensure that video resolution is less than 1152 x 864 pixels. • Ensure that the DVD or CD is inserted into an appropriate optical drive. For example, do not insert a DVD into a CD-only drive.

Serial connector problems

Problem	Solution
The serial connector cannot be accessed.	• Connect the serial cable from the serial connector on the computer to the serial device. If the serial device has its own power cord, connect the power cord to a grounded electrical outlet. • Turn on the serial device and keep the device online. • Install any programs supplied with the serial device. Refer to the documentation that comes with the serial device for more information. • If you added one serial-connector adapter, ensure that the adapter is installed correctly.

USB device problems

Problem	Solution
A USB device cannot be accessed.	• Connect the USB cable from the USB connector to the USB device. If the USB device has its own power cord, connect the power cord to a grounded electrical outlet. • Turn on the USB device and keep the device online. • Install any device drivers or programs supplied with the USB device. Refer to the documentation that comes with the USB device for more information. • Disconnect and reconnect the USB connector to reset the USB device. • Ensure that the Smart USB Protection function is disabled in UEFI BIOS.

Software problems

Problem	Solution
Some programs do not work as expected.	1. Check whether the problem is caused by a program. a. Ensure that the software is compatible with the computer. Refer to the information supplied with the software for more information. b. Verify that other software works correctly on the computer. c. Verify that the software you are using works on another computer. 2. If the problem is caused by a program: • Refer to the printed documentation that comes with the program or the help system of the program. • Update the program. • Uninstall the program and then reinstall it. To download a program that is preinstalled on your computer, go to https://pcsupport.lenovo.com and follow the on-screen instructions.

Lenovo diagnostic tools

For information about Lenovo diagnostic tools, go to:

https://pcsupport.lenovo.com/lenovodiagnosticsolutions

Chapter 7. CRU replacement

Customer Replaceable Units (CRUs) are parts that can be replaced by the customer. Lenovo computers contain the following types of CRUs:

- **Self-service CRUs:** Refer to parts that can be replaced easily by customer themselves or by trained service technicians at an additional cost.
- **Optional-service CRUs:** Refer to parts that can be replaced by customers with a greater skill level. Trained service technicians can also provide service to replace the parts under the type of warranty designated for the customer's machine.

If you intend on installing the CRU, Lenovo will ship the CRU to you. CRU information and replacement instructions are shipped with your product and are available from Lenovo at any time upon request. You might be required to return the defective part that is replaced by the CRU. When return is required: (1) return instructions, a prepaid shipping label, and a container will be included with the replacement CRU; and (2) you might be charged for the replacement CRU if Lenovo does not receive the defective CRU within thirty (30) days of your receipt of the replacement CRU. For full details, see the Lenovo Limited Warranty documentation at:
https://www.lenovo.com/warranty/llw_02

CRU list

The following is the CRU list of your computer.

Self-service CRUs

- Chassis beam*
- Computer cover
- Front bezel
- Keyboard*
- M.2 solid-state drive*
- M.2 solid-state drive bracket*
- M.2 solid-state drive heat sink*
- Memory module
- Mouse*
- Slim optical drive*
- Slim-optical-drive bracket*
- Slim-optical-drive cage*
- Power cord
- Primary storage drive*
- Primary storage drive brackets*
- Primary storage drive cages*
- Secondary storage drive*
- Secondary storage drive bracket*
- Secondary storage drive cage*
- Smart cable clip*

© Copyright Lenovo 2021, 2023

- Storage drive converter*

Optional-service CRUs

- Coin-cell battery
- E-lock*
- Front fan*
- Graphics card and plastic holder*
- Heat-sink-and-fan assembly
- PCI-Express card*
- Power supply assembly
- Rear fan*

* for selected models

Remove or replace a CRU

This section provides instructions on how to remove or replace a CRU.

Computer cover

Prerequisite

Before you start, read *Generic Safety and Compliance Notices*, and print the following instructions.



Before you open the computer cover, turn off the computer and wait several minutes until the computer is cool.

For access, do the following:

1. Remove any media from the drives and turn off all connected devices and the computer.
2. Disconnect all power cords from electrical outlets and disconnect all cables from the computer.
3. Unlock any locking device that secures the computer cover.
4. Lay down the computer to place the computer cover facing up.

Removal steps

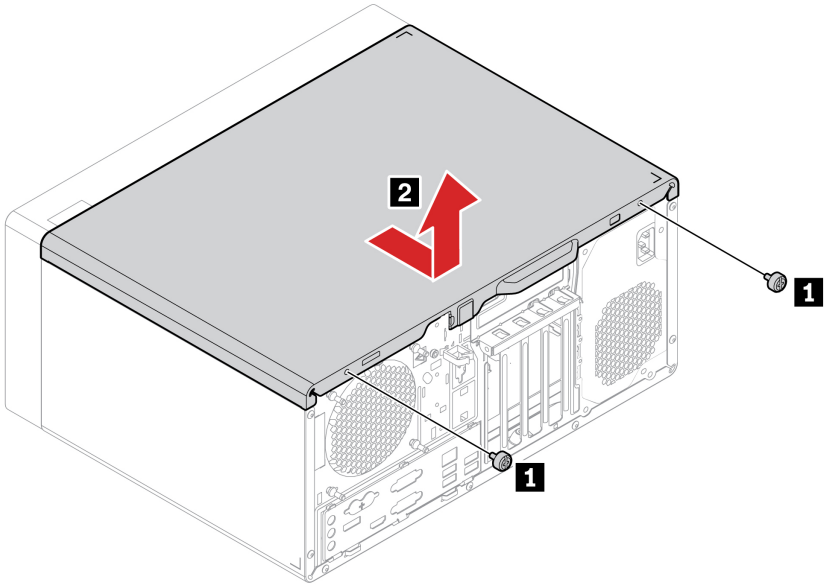

Note: If a locking device is available, use it to lock the computer.

Slim optical drive

Prerequisite

Before you start, read *Generic Safety and Compliance Notices*, and print the following instructions.

For access, do the following:

1. Remove the “Computer cover” on page 26.
2. Disconnect the signal and power cable from the slim optical drive.

Replacement procedure

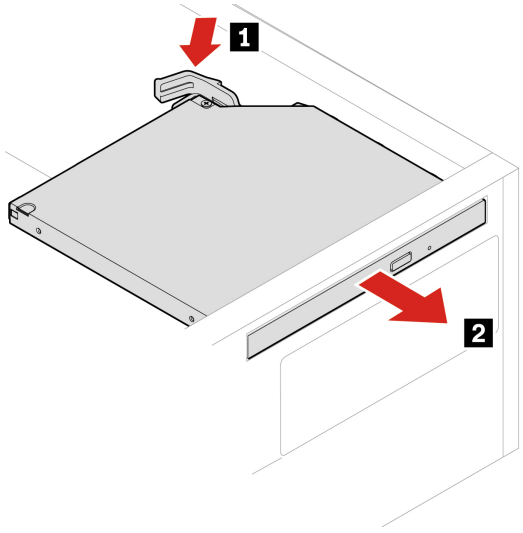

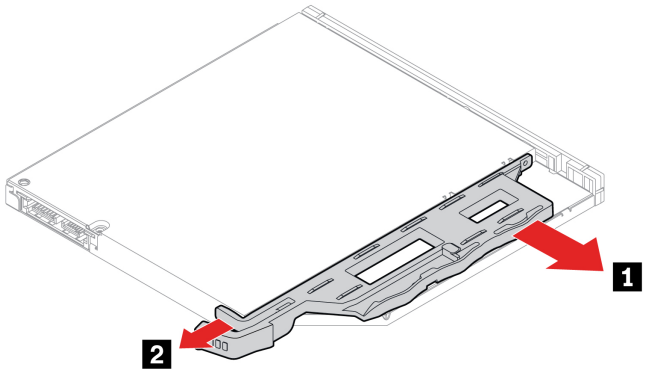

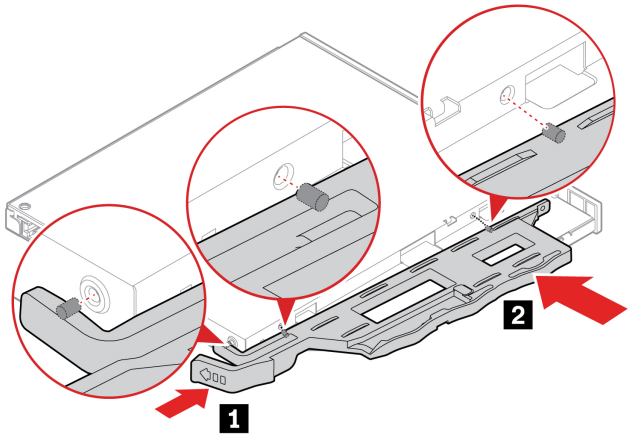

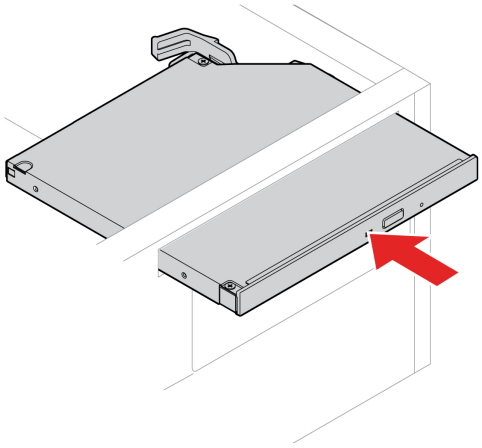

Note: To install a new optical drive, if there is a plastic shield in the front bezel, remove the plastic shield as shown.

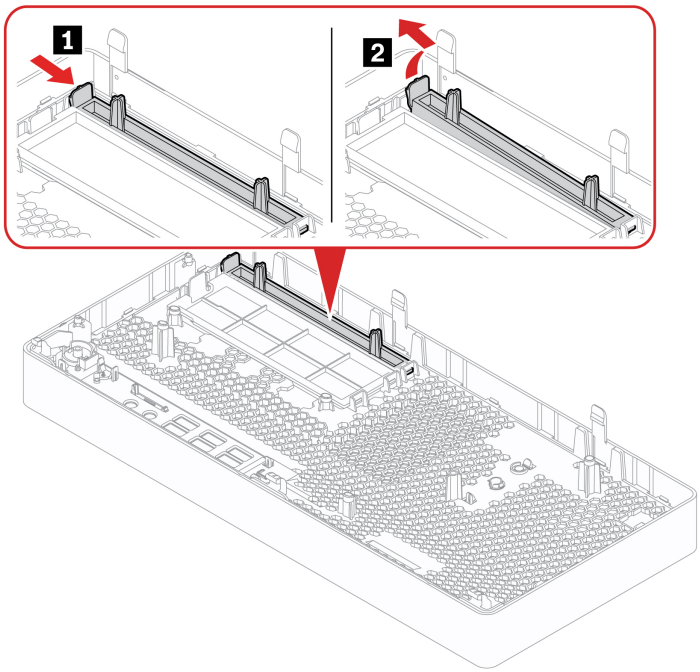

Front bezel

Prerequisite

Before you start, read *Generic Safety and Compliance Notices*, and print the following instructions.

For access, remove these parts in order, if any:

- “Computer cover” on page 26
- “Slim optical drive” on page 27

.

Replacement procedure

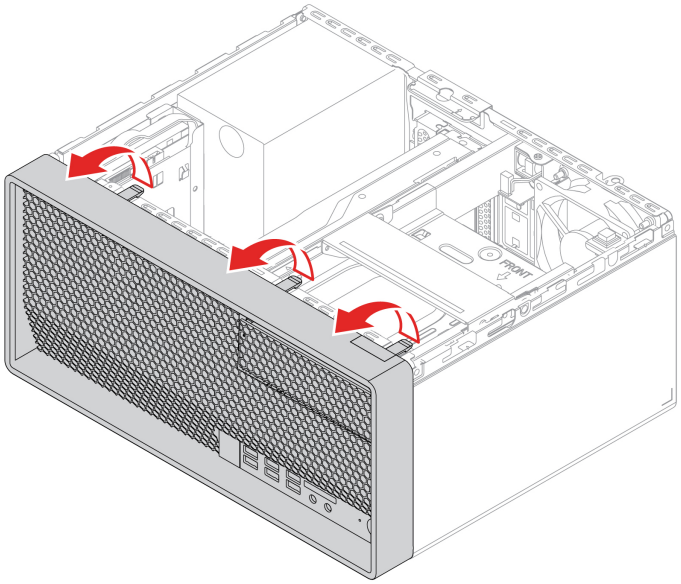

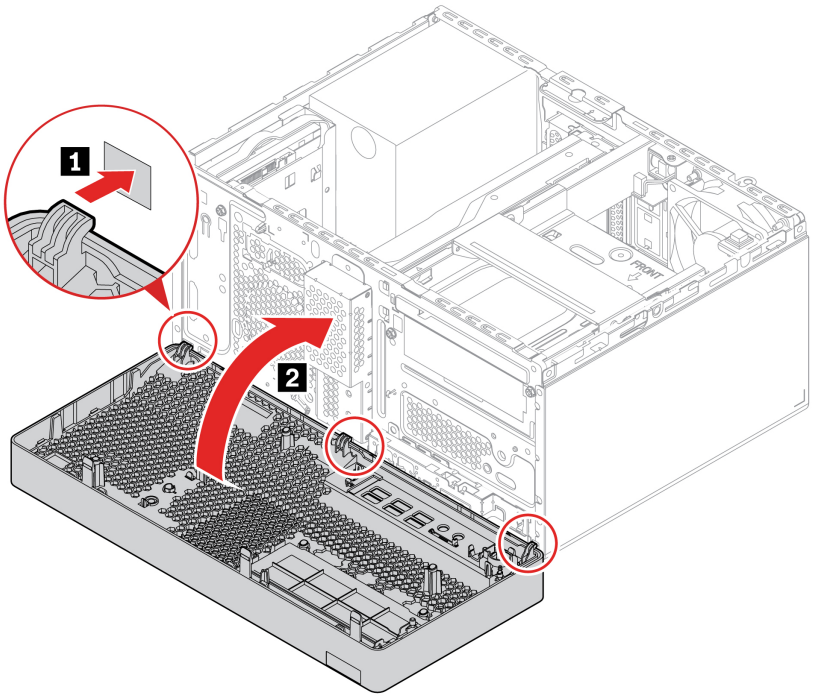

Primary storage drives

Prerequisite

Before you start, read *Generic Safety and Compliance Notices*, and print the following instructions.

Attention: The internal storage drive is sensitive. Inappropriate handling might cause damage and permanent loss of data. When handling the internal storage drive, observe the following guidelines:

- Replace the internal storage drive only for upgrade or repair. The internal storage drive is not designed for frequent changes or replacement.

- Before replacing the internal storage drive, make a backup copy of all the data that you want to keep.
- Do not touch the contact edge of the internal storage drive. Otherwise, the internal storage drive might get damaged.
- Do not apply pressure to the internal storage drive.
- Do not make the internal storage drive subject to physical shocks or vibration. Put the internal storage drive on a soft material, such as cloth, to absorb physical shocks.

Note: The 2.5-inch storage drive in illustrations below does not come with your computer. You can purchase one separately if you need it.

Replacement procedure of the 2.5-inch primary storage drive, bracket, and cage

1. Remove the computer cover. See “Computer cover” on page 26.
2. Disconnect the signal cable and the power cable from the 2.5-inch primary storage drive.

3. Replace the 2.5-inch primary storage drive, bracket, and cage.

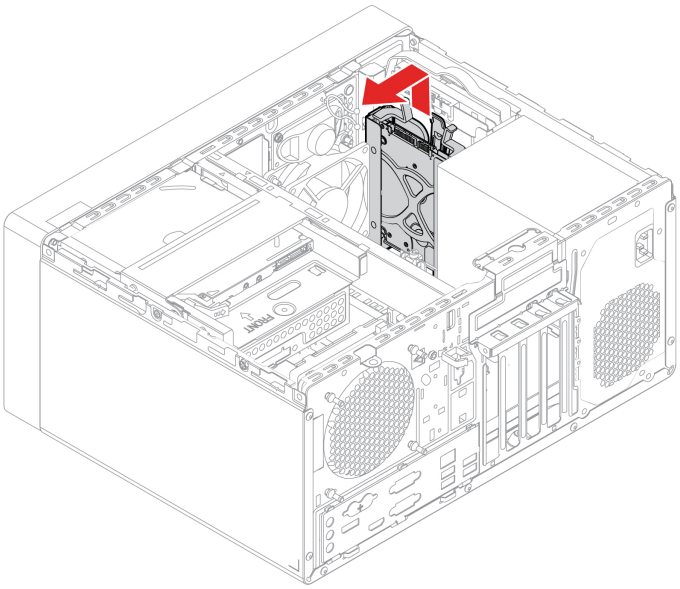

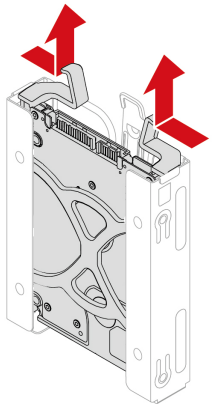

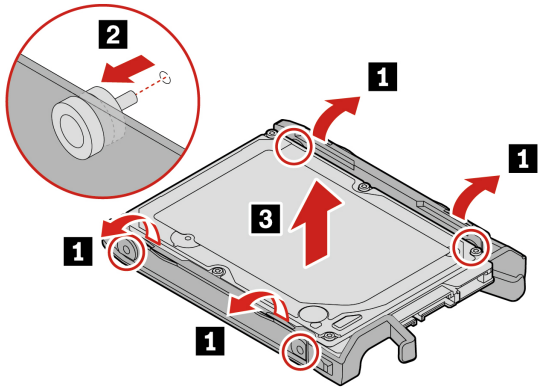

4.

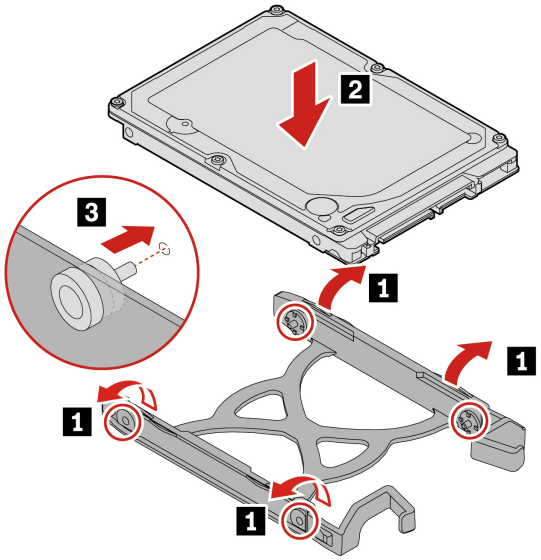
2
3
1
1
1
1

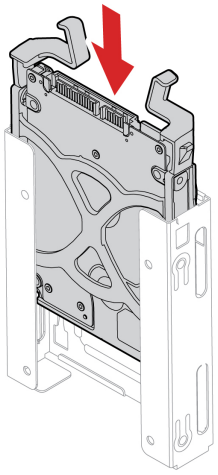

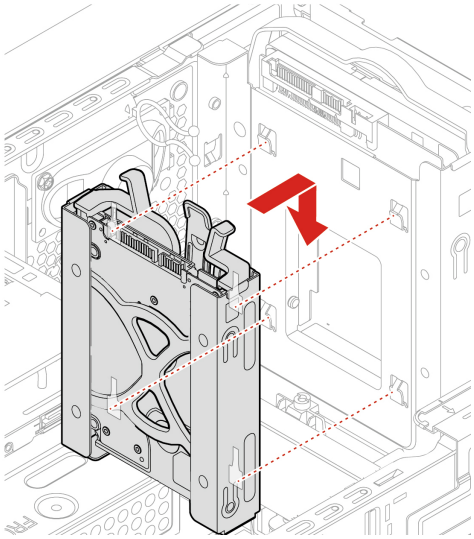

Removal steps of the 3.5-inch primary storage drive and bracket

1. Remove the computer cover. See “Computer cover” on page 26.
2. Disconnect the signal cable and the power cable from the 3.5-inch primary storage drive.
3. Remove the 3.5-inch storage drive and bracket.

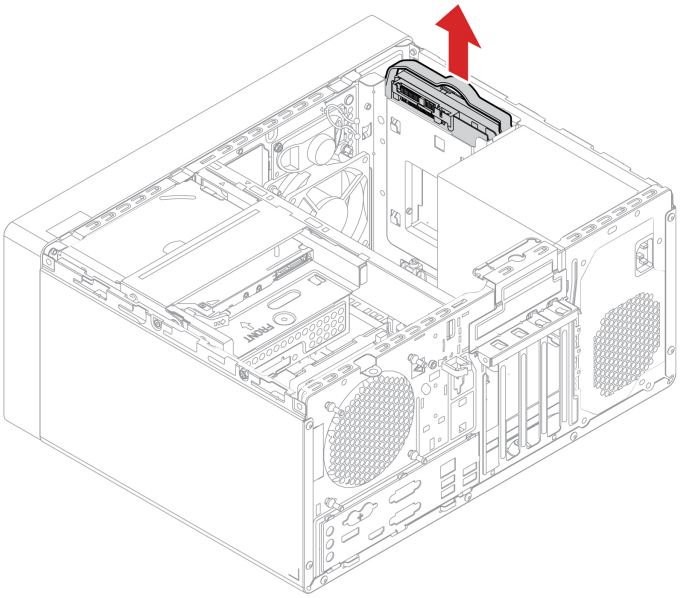

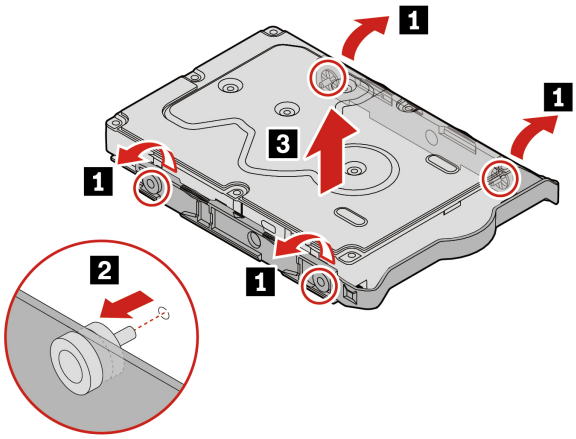

Removal steps of the 2.5-inch primary storage drive, storage drive converter, and bracket

1. Remove the computer cover. See “Computer cover” on page 26.
2. Disconnect the signal cable and the power cable from the 2.5-inch primary storage drive.

3. Remove the 2.5-inch primary storage drive, storage drive converter, and bracket.

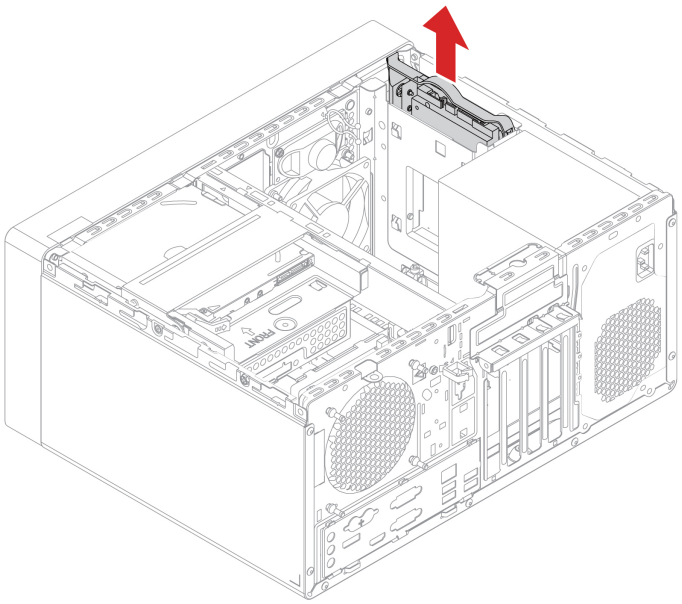

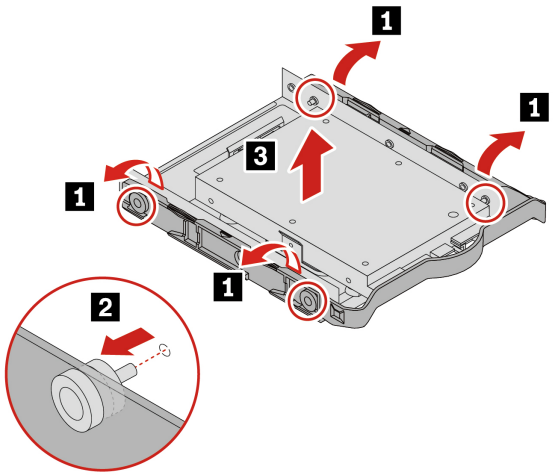

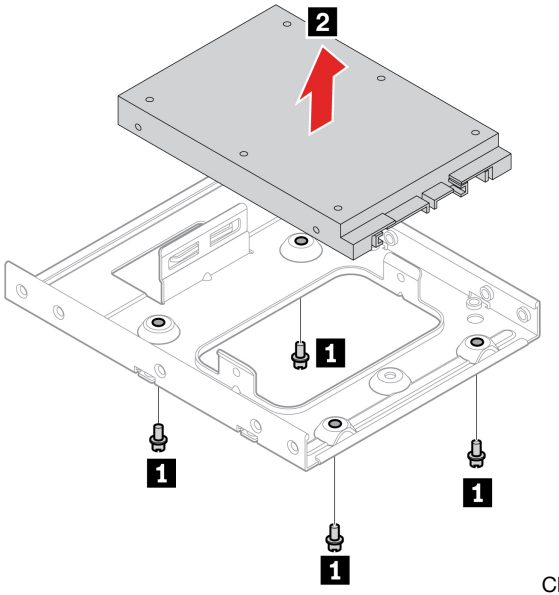

3.5-inch primary storage drive cage

Prerequisite

Before you start, read *Generic Safety and Compliance Notices*, and print the following instructions.

Attention: The internal storage drive is sensitive. Inappropriate handling might cause damage and permanent loss of data. When handling the internal storage drive, observe the following guidelines:

- Replace the internal storage drive only for upgrade or repair. The internal storage drive is not designed for frequent changes or replacement.
- Before replacing the internal storage drive, make a backup copy of all the data that you want to keep.
- Do not touch the contact edge of the internal storage drive. Otherwise, the internal storage drive might get damaged.
- Do not apply pressure to the internal storage drive.
- Do not make the internal storage drive subject to physical shocks or vibration. Put the internal storage drive on a soft material, such as cloth, to absorb physical shocks.

For access, remove the following parts in order, if any:

- “Computer cover” on page 26
- “Slim optical drive” on page 27
- “Front bezel” on page 29
- “Primary storage drives” on page 30

Removal steps

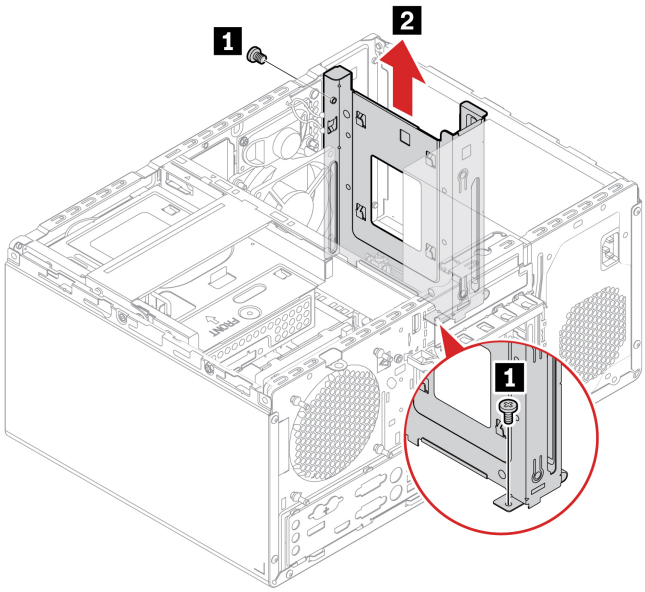

PCI-Express card

Prerequisite

Before you start, read *Generic Safety and Compliance Notices*, and print the following instructions.

For access, remove “Computer cover” on page 26.

Replacement procedure

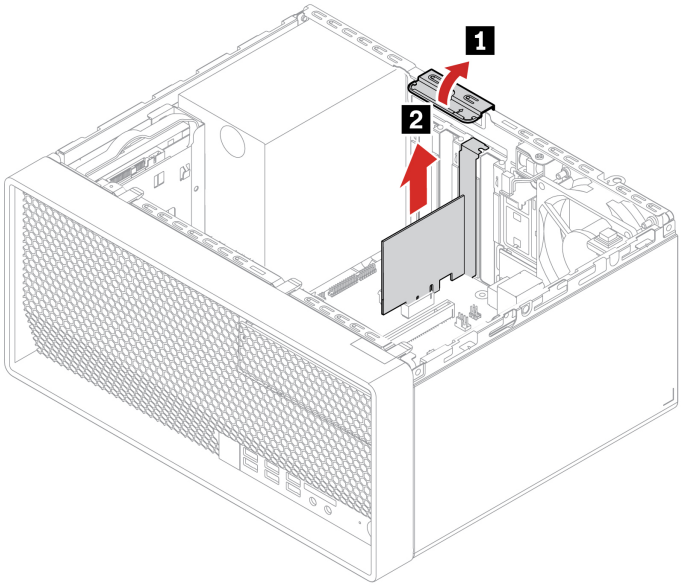

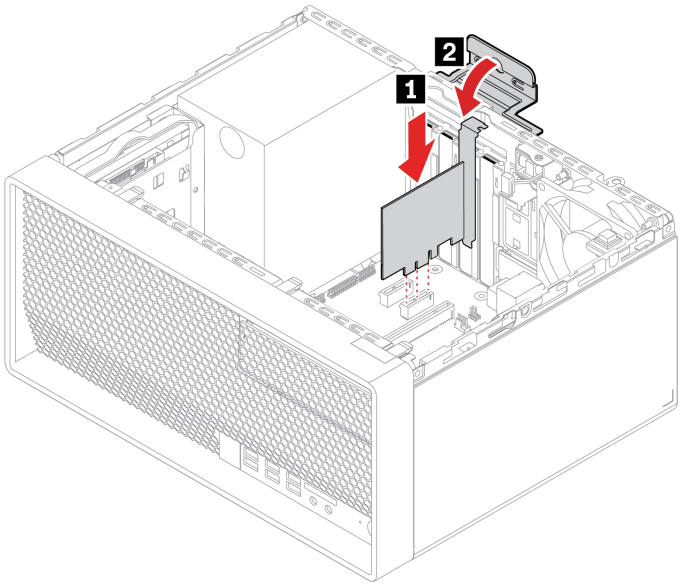

Graphics card

Prerequisite

Before you start, read *Generic Safety and Compliance Notices*, and print the following instructions.

Replacement procedure of the graphics card secured with a bracket

For access, do the following:

1. Remove these parts in order, if any:
   - “Computer cover” on page 26
   - “Optical drive” on page 27

- “Front bezel” on page 29

2. Disconnect the power cable (if any) from the graphics card.
3. Replace the graphics card and bracket.

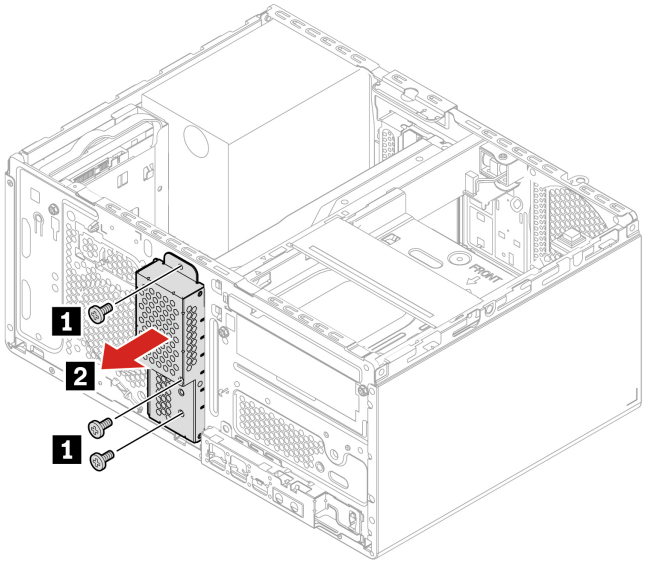

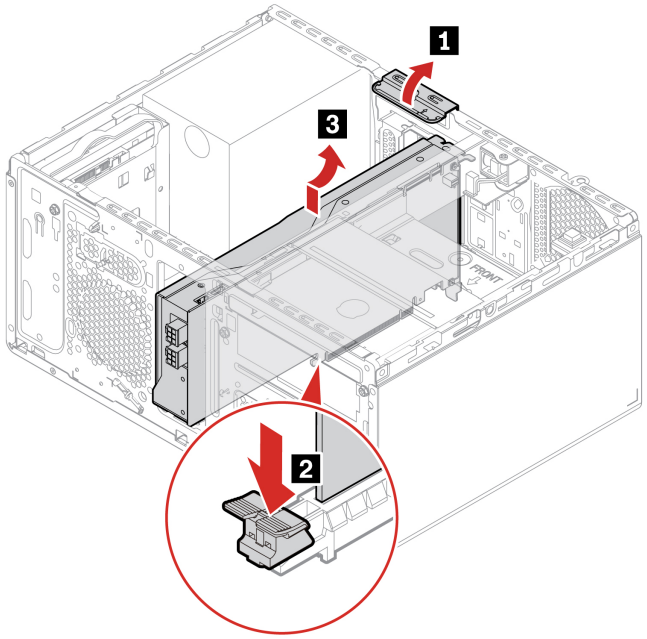

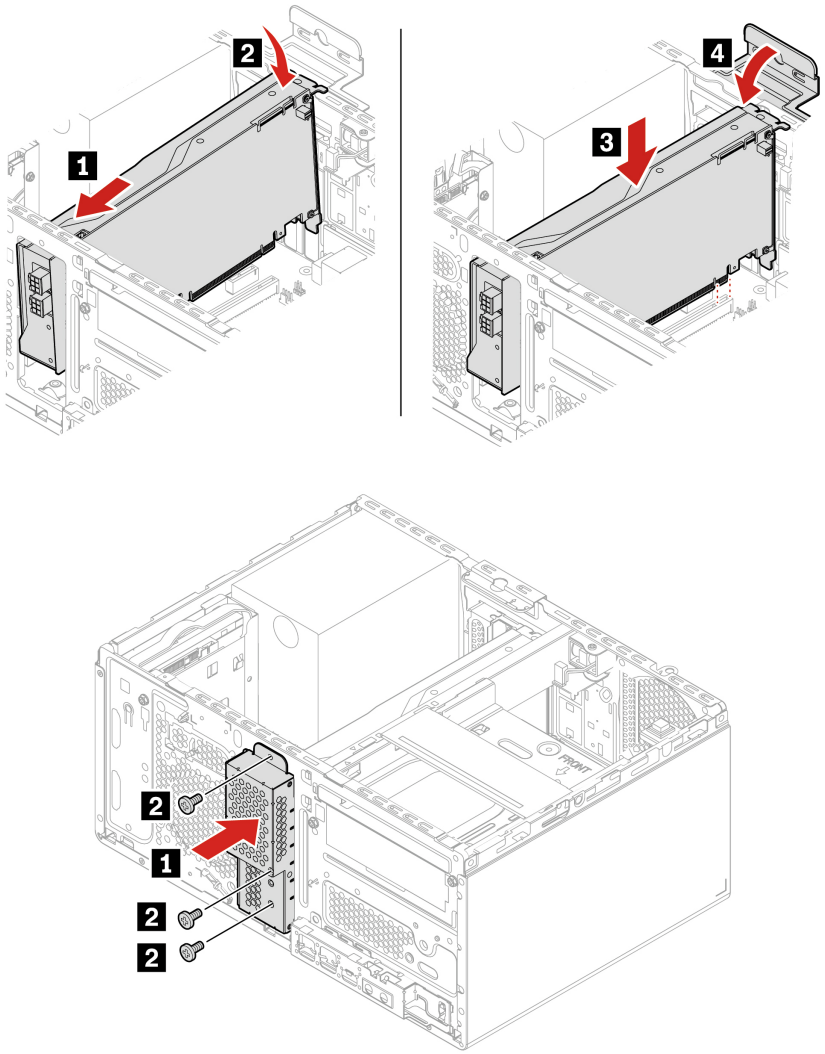

Replacement procedure of the graphics card secured with a plastic holder

For access, do the following:

1. Remove the “Computer cover” on page 26.
2. Disconnect the power cable (if any) from the graphics card.
3. Replace the graphics card and plastic holder.

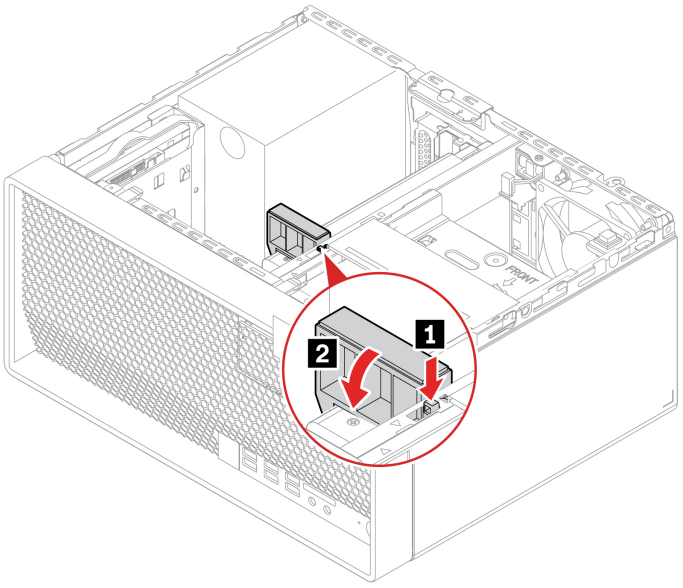
1
2
FRONT

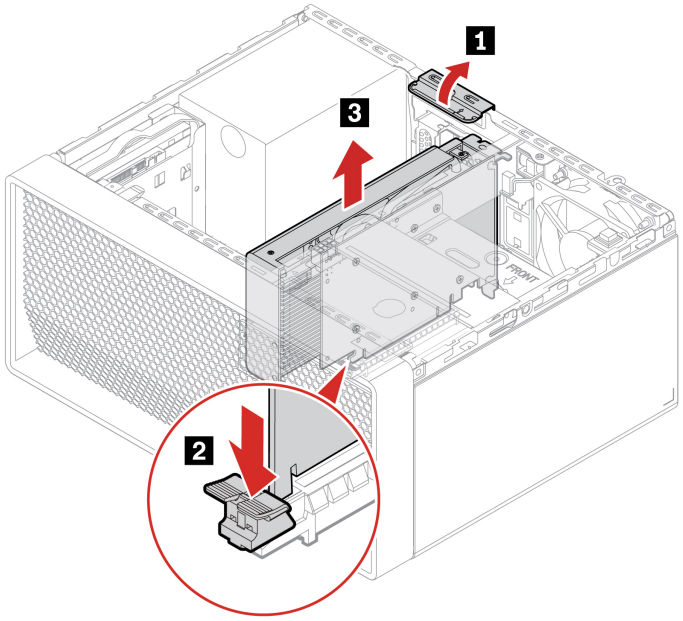
1
3
2
FRONT

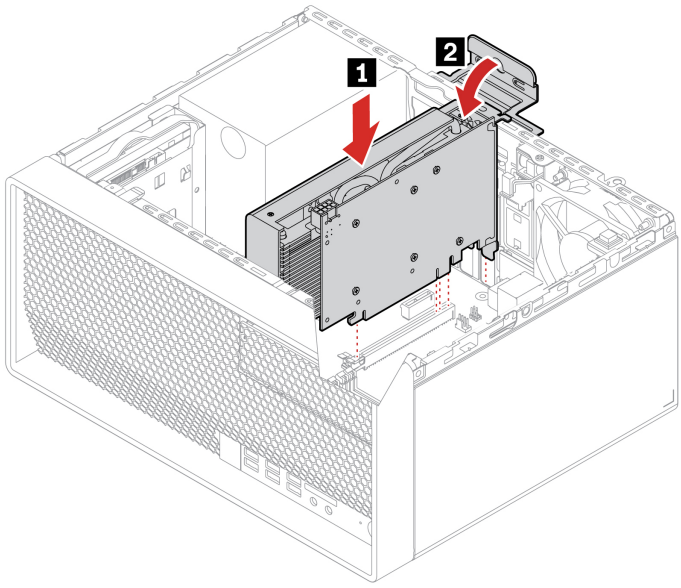

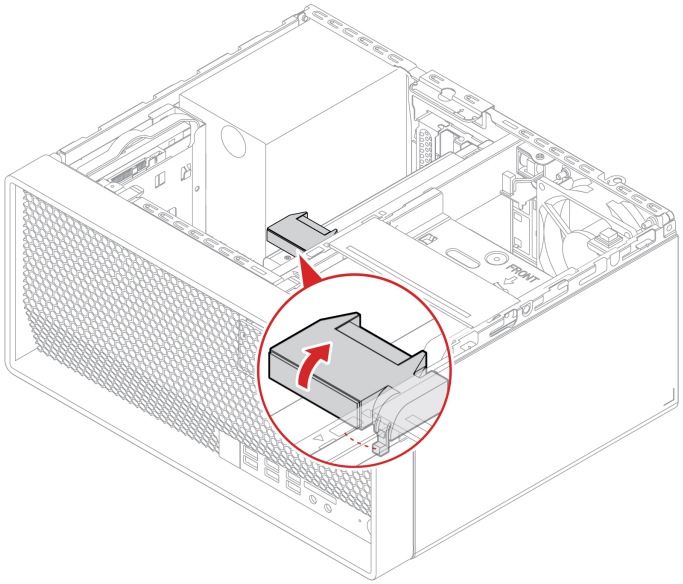

M.2 solid-state drive and heat sink

Prerequisite

Before you start, read *Generic Safety and Compliance Notices*, and print the following instructions.



Before you open the computer cover, turn off the computer and wait several minutes until the computer is cool.

Attention: The internal storage drive is sensitive. Inappropriate handling might cause damage and permanent loss of data. When handling the internal storage drive, observe the following guidelines:

- Replace the internal storage drive only for upgrade or repair. The internal storage drive is not designed for frequent changes or replacement.
- Before replacing the internal storage drive, make a backup copy of all the data that you want to keep.
- Do not touch the contact edge of the internal storage drive. Otherwise, the internal storage drive might get damaged.
- Do not apply pressure to the internal storage drive.
- Do not make the internal storage drive subject to physical shocks or vibration. Put the internal storage drive on a soft material, such as cloth, to absorb physical shocks.

For access, remove these parts in order, if any:

- “Computer cover” on page 26
- 2.5-inch primary hard disk drive cage. See “Primary storage drives” on page 30

Removal steps

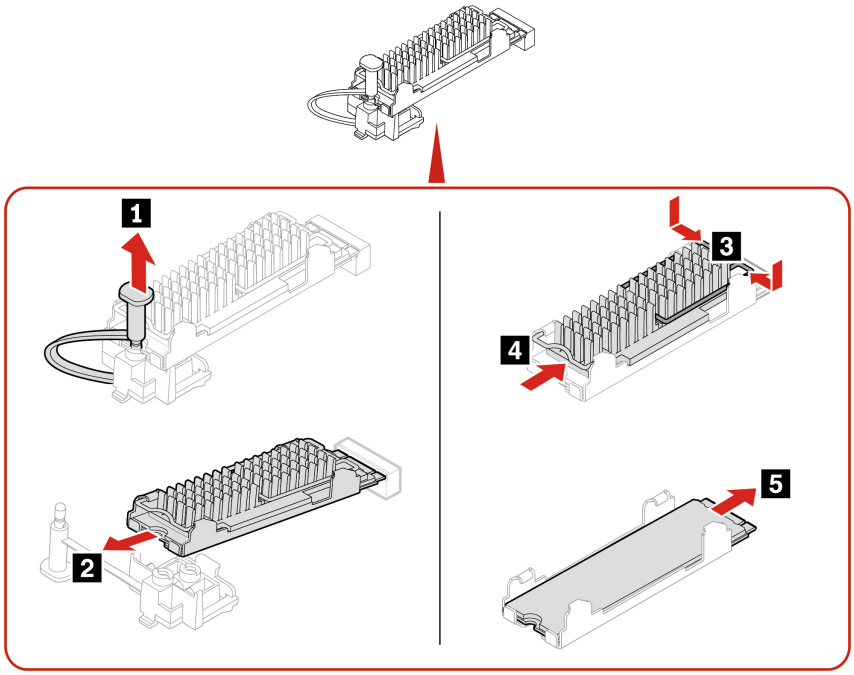

M.2 solid-state drive bracket

Prerequisite

Before you start, read *Generic Safety and Compliance Notices*, and print the following instructions.

For access, remove these parts in order, if any:

- “Computer cover” on page 26
- 2.5-inch primary hard disk drive cage. See “Primary storage drives” on page 30
- “M.2 solid-state drive and heat sink” on page 41

Replacement procedure

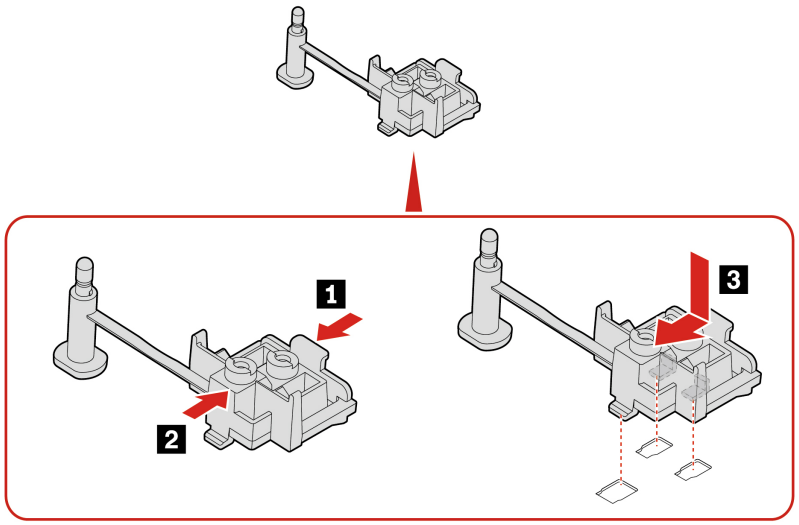

Slim-optical-drive cage

Prerequisite

Before you start, read *Generic Safety and Compliance Notices*, and print the following instructions.

For access, do the following:

1. Remove these parts in order, if any:
   - “Computer cover” on page 26
   - “Slim optical drive” on page 27
   - “Front bezel” on page 29
2. Disconnect the signal cable and power cable from the 3.5-inch secondary hard disk drive under the slim-optical-drive cage.

Replacement procedure

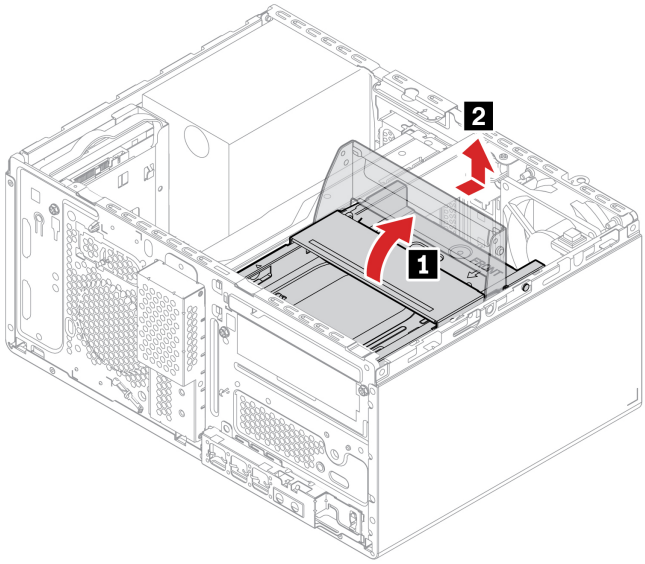

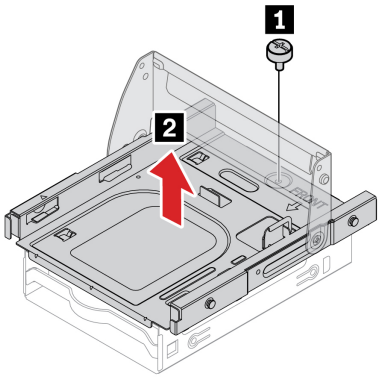

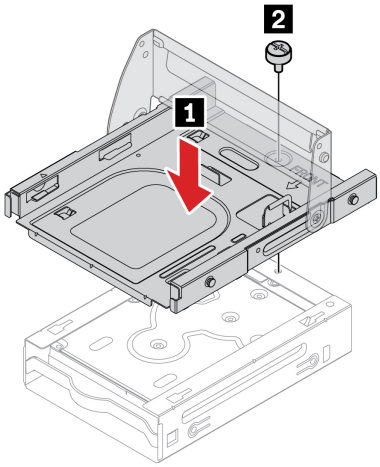

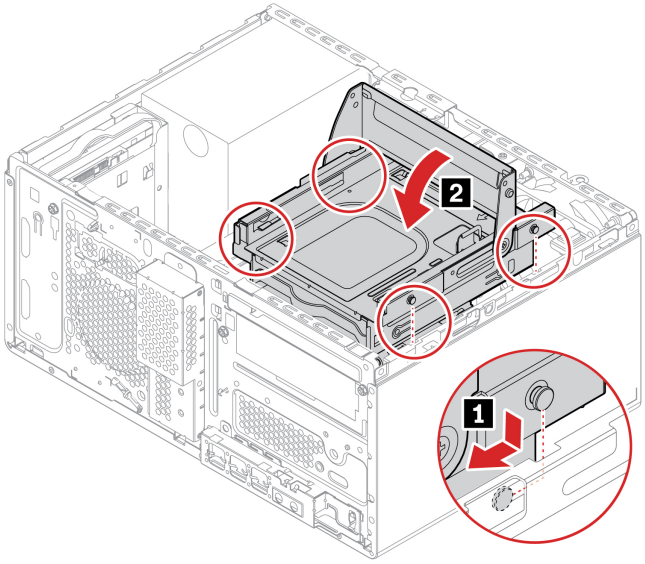

Secondary storage drive

Prerequisite

Before you start, read *Generic Safety and Compliance Notices*, and print the following instructions.

Attention: The internal storage drive is sensitive. Inappropriate handling might cause damage and permanent loss of data. When handling the internal storage drive, observe the following guidelines:

- Replace the internal storage drive only for upgrade or repair. The internal storage drive is not designed for frequent changes or replacement.
- Before replacing the internal storage drive, make a backup copy of all the data that you want to keep.
- Do not touch the contact edge of the internal storage drive. Otherwise, the internal storage drive might get damaged.
- Do not apply pressure to the internal storage drive.
- Do not make the internal storage drive subject to physical shocks or vibration. Put the internal storage drive on a soft material, such as cloth, to absorb physical shocks.

For access, remove these parts in order, if any:

- “Computer cover” on page 26
- “Slim optical drive” on page 27
- “Front bezel” on page 29
- “Slim-optical-drive cage” on page 43

Removal steps of the 3.5-inch secondary storage drive, bracket, and cage

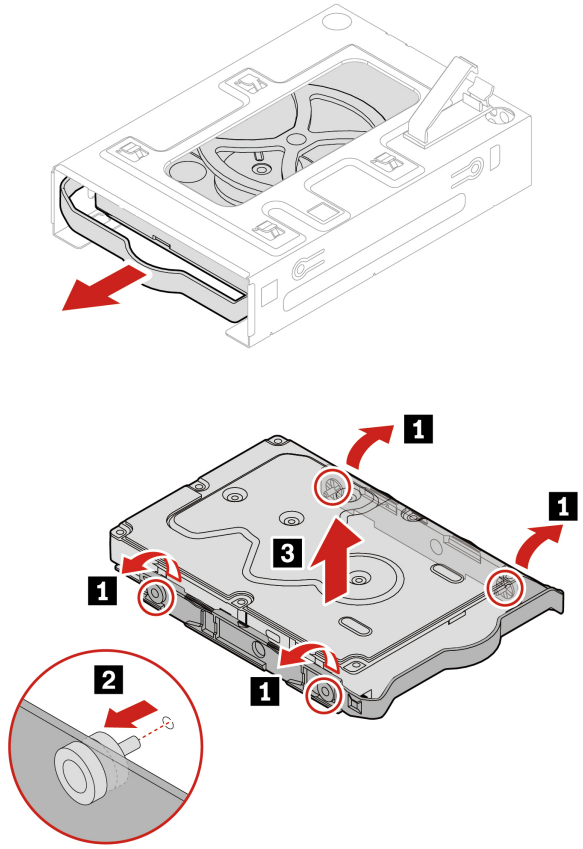

Removal steps of the 2.5-inch primary storage drive, storage drive converter, and bracket

1. Remove the computer cover. See “Computer cover” on page 26.
2. Disconnect the signal cable and the power cable from the 2.5-inch primary storage drive.

3. Remove the 2.5-inch primary storage drive, storage drive converter, and bracket.

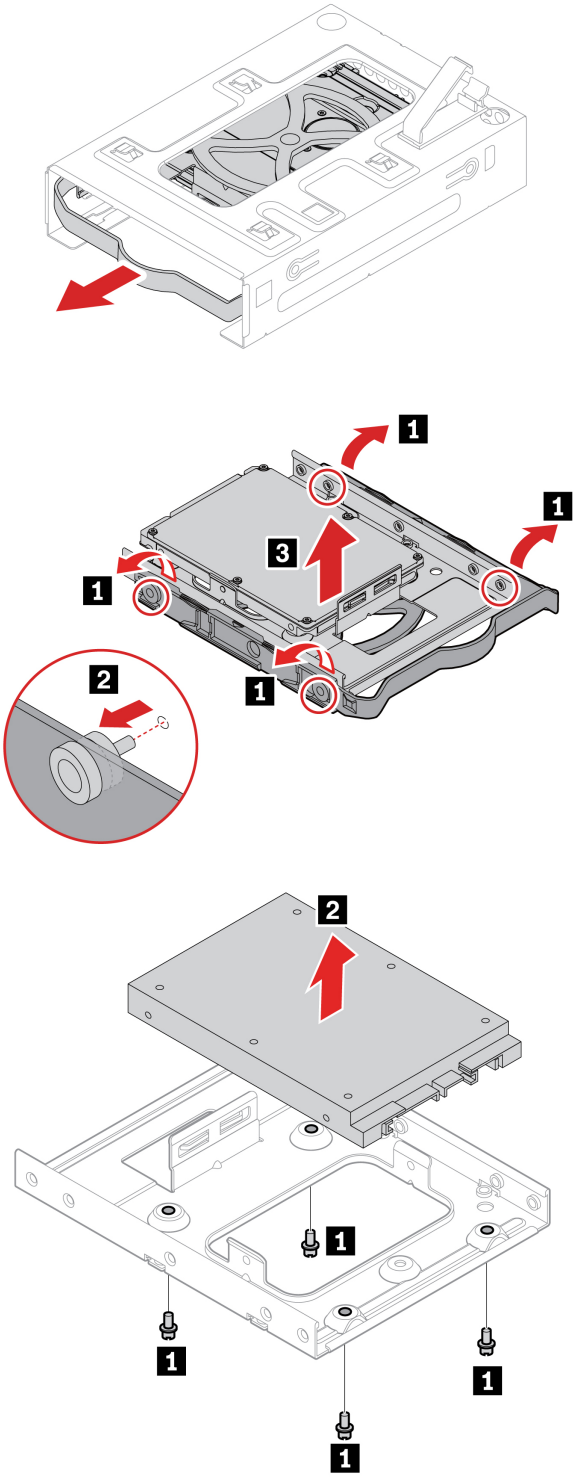

Front fan

Prerequisite

Before you start, read *Generic Safety and Compliance Notices*, and print the following instructions.

For access, do the following:

1. Remove these parts in order, if any:
   - “Computer cover” on page 26
   - “Slim optical drive” on page 27
   - “Front bezel” on page 29
2. Disconnect the front fan cable from the front fan connector on the system board.

Replacement procedure

Note: The front fan is attached to the chassis by four rubber mounts. Stretch the rubber mounts until they fit through the holes.

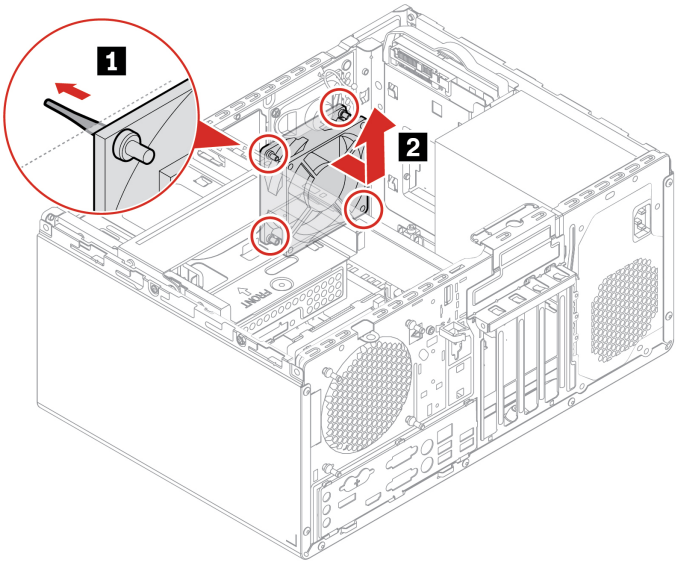

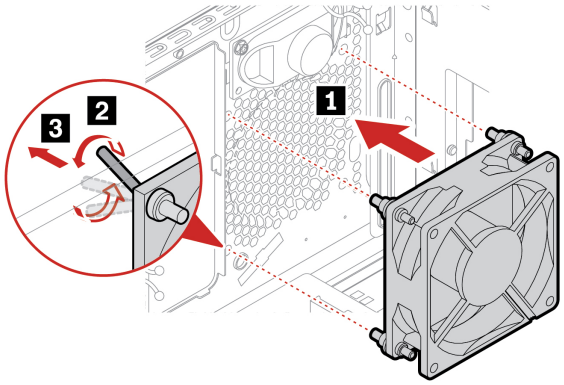

Rear fan

Prerequisite

Before you start, read *Generic Safety and Compliance Notices*, and print the following instructions.

For access, do the following:

1. Remove the computer cover. See “Computer cover” on page 26
2. Disconnect the rear fan cable from the rear fan connector on the system board.

Replacement procedure

Note: The rear fan is attached to the chassis by four rubber mounts. Stretch the rubber mounts until they fit through the holes.

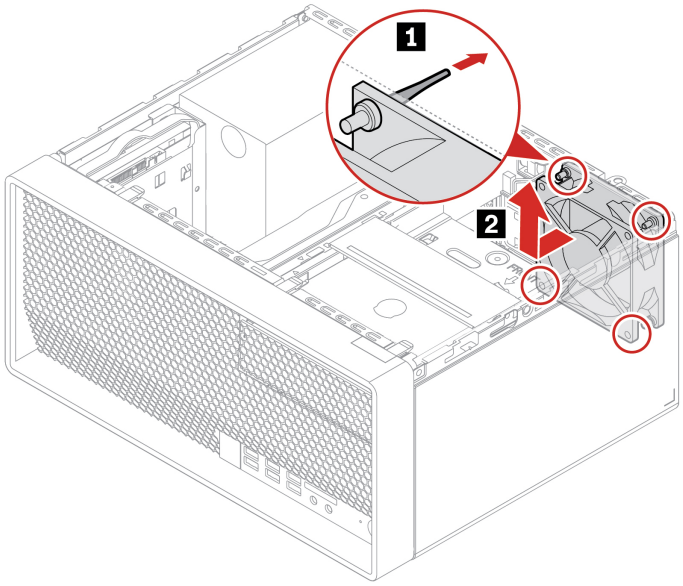

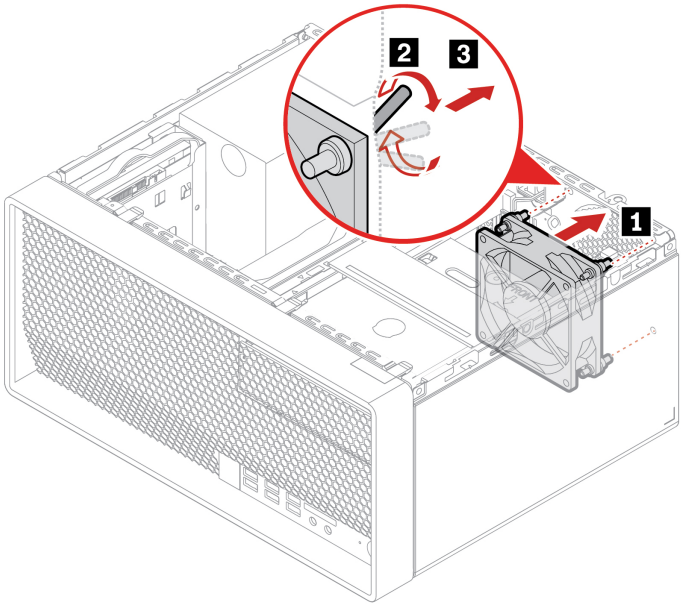

Heat-sink-and-fan assembly

Prerequisite

Before you start, read *Generic Safety and Compliance Notices*, and print the following instructions.



The heat sink might be very hot. Before you open the computer cover, turn off the computer and wait several minutes until the computer is cool.

For access, do the following:

1. Remove these parts in order, if any:
   - “Computer cover” on page 26
   - “Slim optical drive” on page 27
   - “Front bezel” on page 29
   - “Slim-optical-drive cage” on page 43
2. Disconnect the heat-sink-and-fan assembly cable from the microprocessor fan connector on the system board.

Replacement procedure

1. Follow the following sequence to loosen the four screws that secure the heat-sink-and-fan assembly to the system board. Then, lift the heat-sink-and-fan assembly off the system board.
   - Partially loosen screw **1a**, fully loosen screw **1b** , and then fully loosen screw **1a**.
   - Partially loosen screw **1c**, fully loosen screw **1d** , and then fully loosen screw **1c**.

   Notes:
   - Carefully loosen the four screws to avoid any possible damage to the system board. The four screws cannot be removed from the heat-sink-and-fan assembly.
   - You might have to gently twist the heat-sink-and-fan assembly to free it from the microprocessor.
   - Do not touch the thermal grease while handling the heat-sink-and-fan assembly.

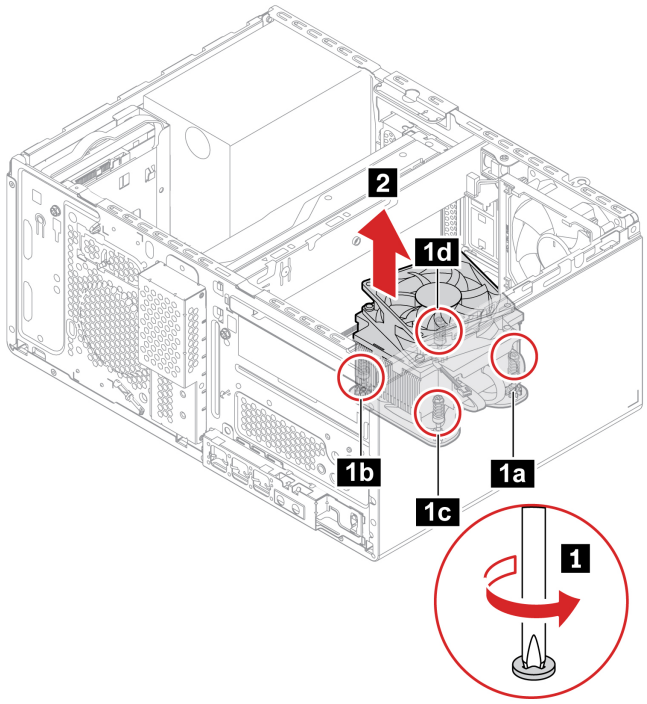

2. Position the heat-sink-and-fan assembly on the system board. Ensure that the four screws are aligned with the holes in the system board. Follow the following sequence to tighten the four screws to secure the new heat-sink-and-fan assembly. Do not over-tighten the screws.
   - Partially tighten screw 2a, fully tighten screw 2b, and then fully tighten screw 2a.
   - Partially tighten screw 2c, fully tighten screw 2d, and then fully tighten screw 2c.

   Notes:
   - Apply appropriate amount of thermal grease to the new heat-sink-and-fan assembly.
   - Ensure that the heat-sink-and-fan assembly cable is toward the microprocessor fan connector on the system board.

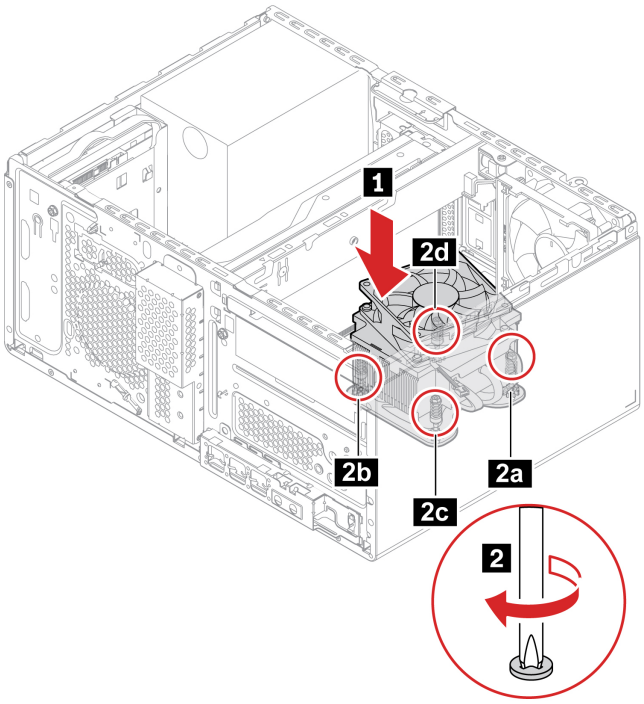

Chassis beam

Prerequisite

Before you start, read *Generic Safety and Compliance Notices*, and print the following instructions.

For access, remove these parts in order, if any:

- “Computer cover” on page 26
- “Slim optical drive” on page 27
- “Front bezel” on page 29
- Remove the plastic holder. See “Graphics card” on page 37
- “Slim-optical-drive cage” on page 43

Replacement procedure

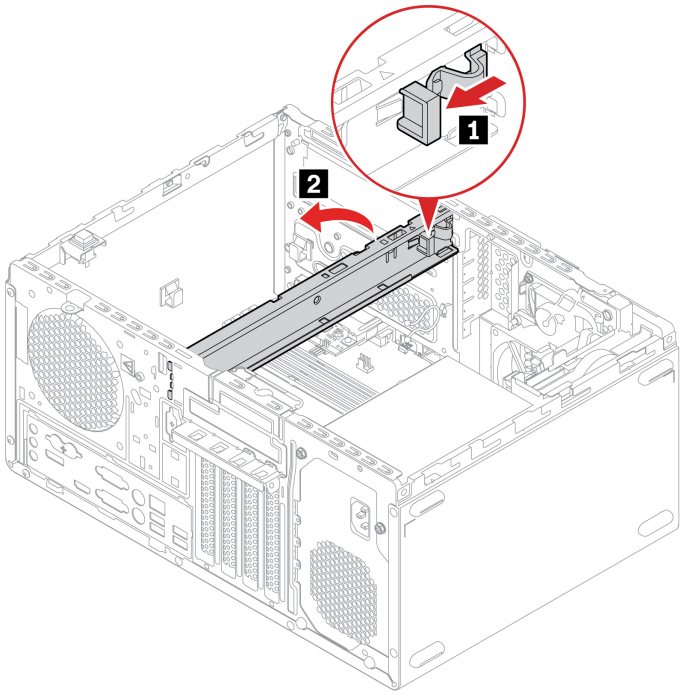

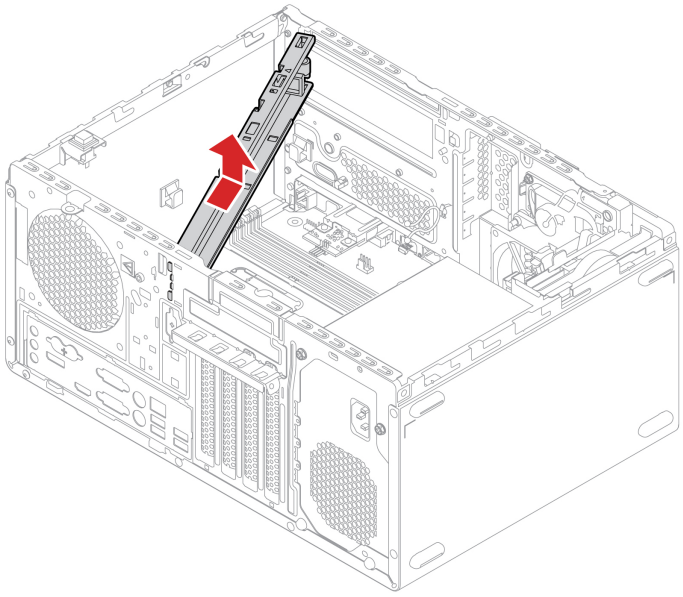

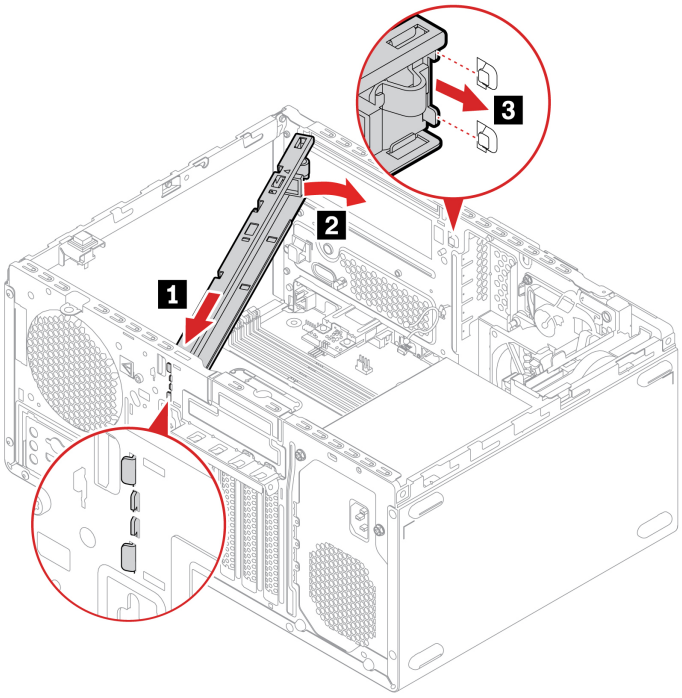

Memory module

Prerequisite

Before you start, read *Generic Safety and Compliance Notices*, and print the following instructions.

Ensure that you follow the installation order for memory modules shown in the following illustration.

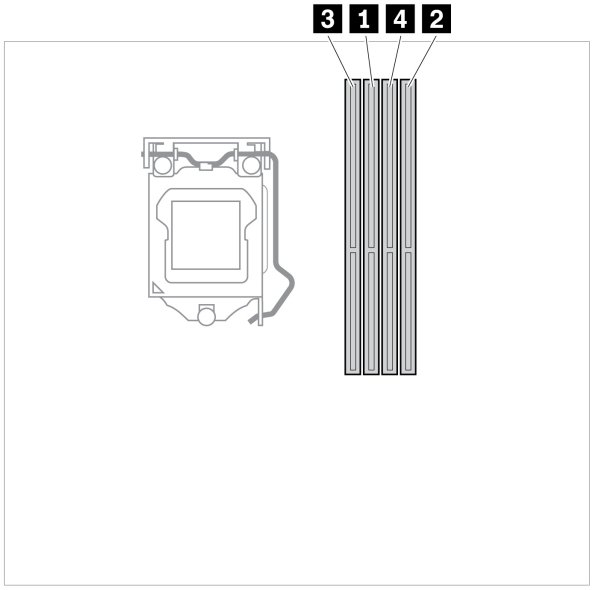

For access, remove these parts in order, if any:

- “Computer cover” on page 26

- “Slim optical drive” on page 27
- “Front bezel” on page 29
- “Slim-optical-drive cage” on page 43

Replacement procedure

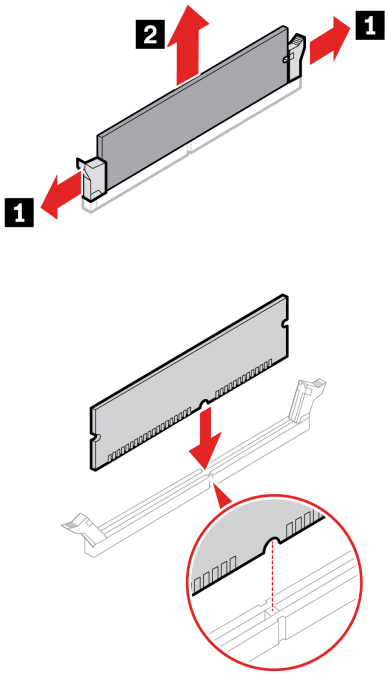

Note: During the installation, ensure that you align the memory module to the slot and press down on both ends until the latches are fully engaged with a click.

Coin-cell battery

Prerequisite

Before you start, read *Generic Safety and Compliance Notices*, and print the following instructions.

Your computer has a special type of memory that maintains the date, time, and settings for built-in features, such as parallel connector assignments (configurations). A coin-cell battery keeps this information active when you turn off the computer.

The coin-cell battery normally requires no charging or maintenance throughout its life; however, no coin-cell battery lasts forever. If the coin-cell battery fails, the date and time information is lost. An error message is displayed when you turn on the computer.

To dispose of the coin-cell battery, refer to the “Lithium coin-cell battery notice” in the *Safety and Warranty Guide*.

For access, remove these parts in order, if any:

- “Computer cover” on page 26
- “Slim optical drive” on page 27
- “Front bezel” on page 29

- “Slim-optical-drive cage” on page 43

Removal steps

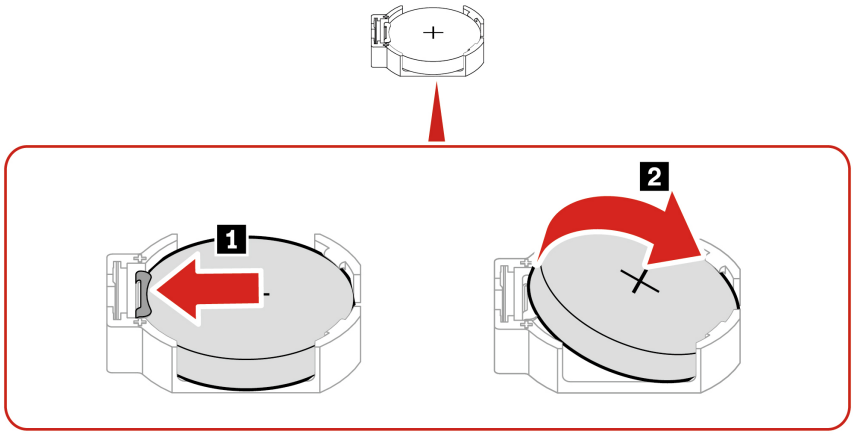

Note: After installing a new coin-cell battery, reset the system date and time in the UEFI BIOS menu.

Power supply assembly

Prerequisite

Before you start, read *Generic Safety and Compliance Notices*, and print the following instructions.



Before you open the computer cover, turn off the computer and wait several minutes until the computer is cool.

Although there are no moving parts in the computer after the power cord has been disconnected, the following warnings are required for your safety.



Keep fingers and other parts of your body away from hazardous, moving parts. If you suffer an injury, seek medical care immediately.Never remove the cover on a power supply or any part that has the following label attached.



Hazardous voltage, current, and energy levels are present inside any component that has this label attached. There are no serviceable parts inside these components. If you suspect a problem with one of these parts, contact a service technician.

For access, do the following:

1. Remove these parts in order, if any:
   - “Computer cover” on page 26

- “Slim optical drive” on page 27
- “Front bezel” on page 29
- “Primary storage drives” on page 30
- “3.5-inch primary storage drive cage” on page 36

2. Disconnect the power supply assembly cables from the system board.

Removal steps

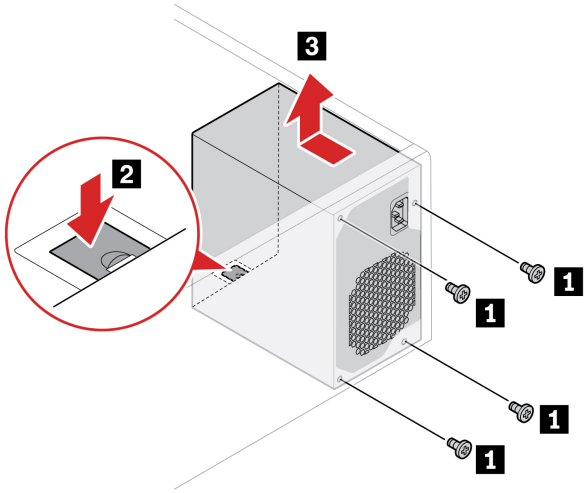

E-lock

Prerequisite

Before you start, read *Generic Safety and Compliance Notices*, and print the following instructions.

For access, do the following:

1. Remove the “Computer cover” on page 26.
2. Disconnect the E-lock cable from the system board.

Note: To remove the screws, you need a special tool (T15 star wrench).

Replacement procedure

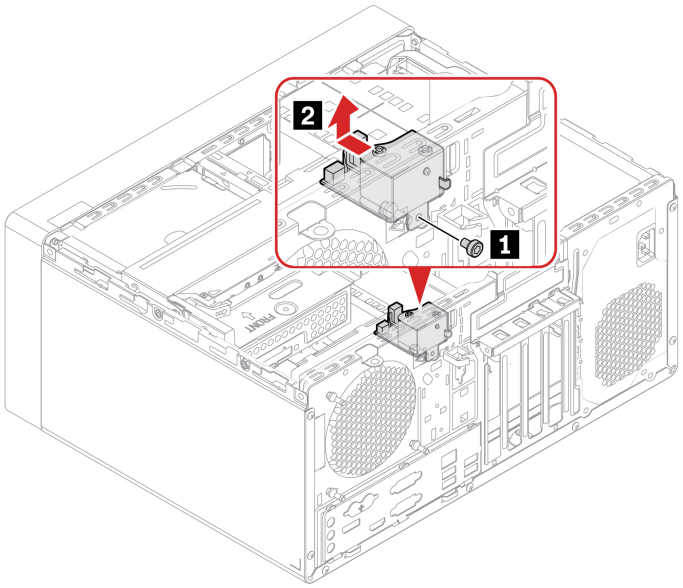

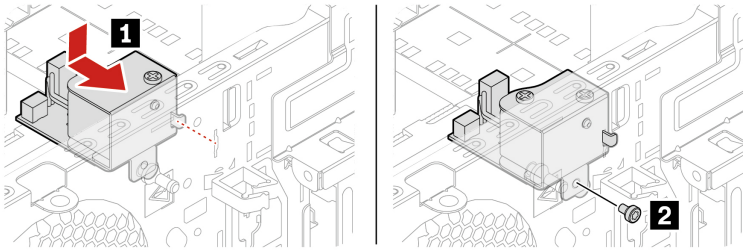

Chapter 8. Help and support

Self-help resources

Use the following self-help resources to learn more about the computer and troubleshoot problems.

Resources	How to access?
Product documentation: • *Safety and Warranty Guide* • *Generic Safety and Compliance Notices* • *Setup Guide* • This *User Guide* • *Regulatory Notice*	Go to https://pcsupport.lenovo.com. Then, follow the on-screen instructions to filter out the documentation you want.
Lenovo Support Web site with the latest support information of the following: • Drivers and software • Diagnostic solutions • Product and service warranty • Product and parts details • Knowledge base and frequently asked questions	https://pcsupport.lenovo.com
Ubuntu help information	https://help.ubuntu.com/lts/ubuntu-help/index.html

© Copyright Lenovo 2021, 2023

Call Lenovo

If you have tried to correct the problem yourself and still need help, you can call Lenovo Customer Support Center.

Before you contact Lenovo

Prepare the following before you contact Lenovo:

1. Record the problem symptoms and details:
   - What is the problem? Is it continuous or intermittent?
   - Any error message or error code?
   - What operating system are you using? Which version?
   - Which software applications were running at the time of the problem?
   - Can the problem be reproduced? If so, how?
2. Record the system information:
   - Product name
   - Machine type and serial number

     The following illustration shows where to find the machine type and serial number of your computer.

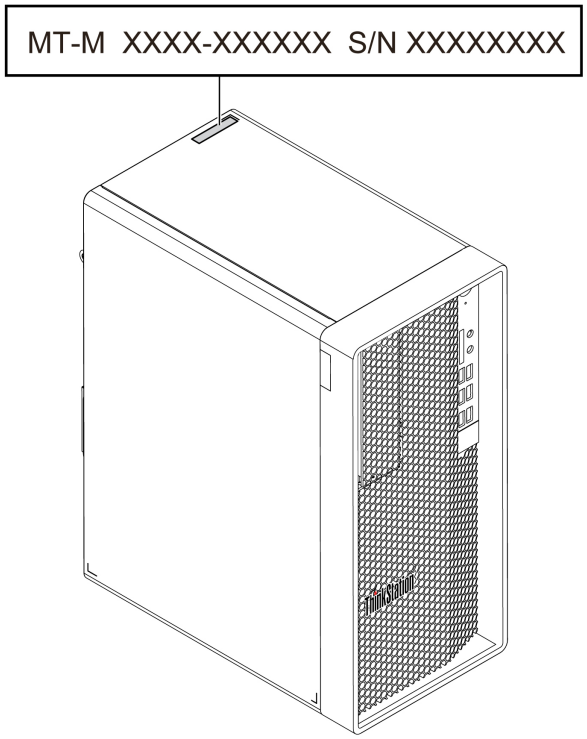

Lenovo Customer Support Center

During the warranty period, you can call Lenovo Customer Support Center for help.

Telephone numbers

For a list of the Lenovo Support phone numbers for your country or region, go to:

https://pcsupport.lenovo.com/supportphonelist

Note: Phone numbers are subject to change without notice. If the number for your country or region is not provided, contact your Lenovo reseller or Lenovo marketing representative.

Services available during the warranty period

- Problem determination - Trained personnel are available to assist you with determining if you have a hardware problem and deciding what action is necessary to fix the problem.
- Lenovo hardware repair - If the problem is determined to be caused by Lenovo hardware under warranty, trained service personnel are available to provide the applicable level of service.
- Engineering change management - Occasionally, there might be changes that are required after a product has been sold. Lenovo or your reseller, if authorized by Lenovo, will make selected Engineering Changes (ECs) that apply to your hardware available.

Services not covered

- Replacement or use of parts not manufactured for or by Lenovo or nonwarranted parts
- Identification of software problem sources
- Configuration of UEFI BIOS as part of an installation or upgrade
- Changes, modifications, or upgrades to device drivers
- Installation and maintenance of network operating systems (NOS)
- Installation and maintenance of programs

For the terms and conditions of the Lenovo Limited Warranty that apply to your Lenovo hardware product, see *Safety and Warranty Guide* that comes with your computer.

Purchase additional services

During and after the warranty period, you can purchase additional services from Lenovo at: https://pcsupport.lenovo.com/warrantyupgrade

Service availability and service name might vary by country or region.

Appendix A. System memory speed

The Intel Xeon® or Intel Core™ microprocessor families compatible with this ThinkStation computer feature an integrated memory controller. The memory controller provides the microprocessor with direct access to the system memory. Therefore, the system memory speed will be determined by the memory module type, frequency, size (capacity), the number of memory modules installed, and the microprocessor model.

Notes:

- The actual system memory speed of the memory modules varies depending on the microprocessor model. For example, your computer comes with 2666 MT/s memory modules, but the microprocessor only supports up to 2400 MT/s memory modules. Then the system memory speed will be no faster than 2400 MT/s.
- The microprocessor models supported in your computer might vary. For a list of supported microprocessor models, contact the Lenovo Customer Support Center.

Refer to the following information about the system memory speed:

- **Memory module type:**
  - DDR4 non-ECC UDIMMs
- **Memory module operating voltage**: 1.2 V
- **Memory module speed**: 3200 MT/s

© Copyright Lenovo 2021, 2023

Appendix B. Supplemental information about the Ubuntu operating system

In limited countries or regions, Lenovo offers customers an option to order computers with the preinstalled Ubuntu® operating system.

If the Ubuntu operating system is available on your computer, read the following information before you use the computer. Ignore any information related to Windows-based programs, utilities, and Lenovo preinstalled applications in this documentation.

Access the Lenovo Limited Warranty

This product is covered by the terms of the Lenovo Limited Warranty (LLW), version L505-0010-02 08/2011. You can view the LLW in a number of languages from the following Web site. Read the Lenovo Limited Warranty at:
https://www.lenovo.com/warranty/llw_02

The LLW also is preinstalled on the computer. To access the LLW, go to the following directory:

```
/opt/Lenovo
```

If you cannot view the LLW either from the Web site or from your computer, contact your local Lenovo office or reseller to obtain a printed version of the LLW.

Access the Ubuntu help system

The Ubuntu help system provides information about how to use the Ubuntu operating system. To access the help system from Home Screen, move your pointer to the Launch bar, and then click the **Help** icon. If you cannot find the **Help** icon from the Launch bar, click the **Search** icon on the bottom left, and type Help to search it.

To learn more about the Ubuntu operating system, go to:
https://www.ubuntu.com

Get support information

If you need help, service, technical assistance, or more information about the Ubuntu operating system or other applications, contact the provider of the Ubuntu operating system or the provider of the application. If you need the service and support for hardware components shipped with your computer, contact Lenovo. For more information about how to contact Lenovo, refer to the *User Guide* and *Safety and Warranty Guide*.

To access the latest *User Guide* and *Safety and Warranty Guide*, go to:
https://pcsupport.lenovo.com

Access open-source information

This device includes software made publicly available by Lenovo, including software licensed under the General Public License and/or the Lesser General Public License (the open source software).

You may obtain a copy of the corresponding source code for any such open source software licensed under the General Public License and/or the Lesser General Public License (or any other license requiring us to make a written offer to provide corresponding source code to you) from Lenovo for a period of three years without charge except for the cost of media, shipping, and handling, upon written request to Lenovo. This offer is valid to anyone in receipt of this device.

© Copyright Lenovo 2021, 2023

You may send your request in writing to the address below accompanied by a check or money order for $15 to:

Lenovo Legal Department
Attn: Open Source Team / Source Code Requests
8001 Development Dr.
Morrisville, NC 27560

Please include the version of the OS and the version of the Linux Kernel pre-shipped on this Device as part of your request. Be sure to provide a return address.

The open source software is distributed in hope it will be useful, but WITHOUT ANY WARRANTY; without even the implied warranty of MERCHANTABILITY or FITNESS FOR A PARTICULAR PURPOSE. See for example the GNU General Public License and/or the Lesser General Public License for more information.

To view additional information regarding licenses, acknowledgments and required copyright notices for the open source software shipped on your Device, go to `/usr/share/doc/*/copyright`.

Appendix C. Compliance information

For more compliance information, refer to *Regulatory Notice* at https://pcsupport.lenovo.com and *Generic Safety and Compliance Notices* at https://pcsupport.lenovo.com/docs/generic_notices.

Certification-related information

Product name: ThinkStation P348

Machine types: 30EQ, 30ER, 30ES, and 30ET

Further compliance information related to your product is available at https://www.lenovo.com/compliance.

Operating environment

Maximum altitude (without pressurization)

- Operating: From 0 m (0 ft) to 3048 m (10 000 ft)
- Storage: From 0 m (0 ft) to 12192 m (40 000 ft)

Temperature

- Operating: From 10°C (50°F) to 35°C (95°F)
- Storage: From -40°C (-40°F) to 60°C (140°F)

Relative humidity

- Operating: 20%-80% (non-condensing)
- Storage: 10%–90% (non-condensing)

© Copyright Lenovo 2021, 2023

Appendix D. Notices and trademarks

Notices

Lenovo may not offer the products, services, or features discussed in this document in all countries. Consult your local Lenovo representative for information on the products and services currently available in your area. Any reference to a Lenovo product, program, or service is not intended to state or imply that only that Lenovo product, program, or service may be used. Any functionally equivalent product, program, or service that does not infringe any Lenovo intellectual property right may be used instead. However, it is the user's responsibility to evaluate and verify the operation of any other product, program, or service.

Lenovo may have patents or pending patent programs covering subject matter described in this document. The furnishing of this document does not give you any license to these patents. You can send license inquiries, in writing, to:

Lenovo (United States), Inc.
8001 Development Drive
Morrisville, NC 27560
U.S.A.
Attention: Lenovo Director of Licensing

LENOVO PROVIDES THIS PUBLICATION "AS IS" WITHOUT WARRANTY OF ANY KIND, EITHER EXPRESS OR IMPLIED, INCLUDING, BUT NOT LIMITED TO, THE IMPLIED WARRANTIES OF NON-INFRINGEMENT, MERCHANTABILITY OR FITNESS FOR A PARTICULAR PURPOSE. Some jurisdictions do not allow disclaimer of express or implied warranties in certain transactions, therefore, this statement may not apply to you.

Changes are made periodically to the information herein; these changes will be incorporated in new editions of the publication. To provide better service, Lenovo reserves the right to improve and/or modify the products and software programs described in the manuals included with your computer, and the content of the manual, at any time without additional notice.

The software interface and function and hardware configuration described in the manuals included with your computer might not match exactly the actual configuration of the computer that you purchase. For the configuration of the product, refer to the related contract (if any) or product packing list, or consult the distributor for the product sales. Lenovo may use or distribute any of the information you supply in any way it believes appropriate without incurring any obligation to you.

The products described in this document are not intended for use in implantation or other life support applications where malfunction may result in injury or death to persons. The information contained in this document does not affect or change Lenovo product specifications or warranties. Nothing in this document shall operate as an express or implied license or indemnity under the intellectual property rights of Lenovo or third parties. All information contained in this document was obtained in specific environments and is presented as an illustration. The result obtained in other operating environments may vary.

Lenovo may use or distribute any of the information you supply in any way it believes appropriate without incurring any obligation to you.

Any references in this publication to non-Lenovo Web sites are provided for convenience only and do not in any manner serve as an endorsement of those Web sites. The materials at those Web sites are not part of the materials for this Lenovo product, and use of those Web sites is at your own risk.

© Copyright Lenovo 2021, 2023

Any performance data contained herein was determined in a controlled environment. Therefore, the result obtained in other operating environments may vary significantly. Some measurements may have been made on development-level systems and there is no guarantee that these measurements will be the same on generally available systems. Furthermore, some measurements may have been estimated through extrapolation. Actual results may vary. Users of this document should verify the applicable data for their specific environment.

This document is copyrighted by Lenovo and is not covered by any open source license, including any Linux agreement(s) which may accompany software included with this product. Lenovo may update this document at any time without notice.

For the latest information or any questions or comments, contact or visit the Lenovo Web site:
https://pcsupport.lenovo.com

LENOVO, LENOVO logo, THINKSTATION, and THINKSTATION logo are trademarks of Lenovo. Intel, Core, and Thunderbolt are trademarks of Intel Corporation or its subsidiaries in the U.S. and/or other countries. Microsoft and Windows are trademarks of the Microsoft group of companies. DisplayPort is a trademark of the Video Electronics Standards Association. The terms HDMI and HDMI High-Definition Multimedia Interface are trademarks or registered trademarks of HDMI Licensing LLC in the United States and other countries. Wi-Fi is a registered trademark of Wi-Fi Alliance. All other trademarks are the property of their respective owners. © 2021 Lenovo.


Lenovo