M90t
User Guide



Read this first

Before using this documentation and the product it supports, ensure that you read and understand the following:

- Appendix A “Important safety information” on page 71
- *Safety and Warranty Guide*
- *Setup Guide*

Fifth Edition (November 2023)

© Copyright Lenovo 2021, 2023.

LIMITED AND RESTRICTED RIGHTS NOTICE: If data or software is delivered pursuant to a General Services Administration “GSA” contract, use, reproduction, or disclosure is subject to restrictions set forth in Contract No. GS-35F-05925.

Contents

About this documentation iii

Chapter 1. Meet your computer 1

Front 1
Statement on USB transfer rate 2
Rear 3
Features and specifications 5

Chapter 2. Get started with your computer 7

Connect to networks 7
Connect to the wired Ethernet 7
Connect to Wi-Fi networks (for selected models) 7
Use the Vantage app 7
Use multimedia 7
Use audio 7
Connect an external display 8

Chapter 3. Explore your computer . . . 9

Manage power 9
Set power button behaviors 9
Set the power plan 9
Transfer data 9
Connect to a Bluetooth-enabled device (for selected models) 9
Use the optical drive (for selected models) . . 10
Use a media card (for selected models) 10
Use a smart cable clip (for selected models) 10
Purchase accessories 11

Chapter 4. Secure your computer and information 13

Lock the computer 13
Use passwords 14
Use software security solutions 15
Use Windows firewalls 15
Use Computrace Agent software embedded in firmware (for selected models) 16
Use BIOS security solutions 16
Erase all storage drive data 16
Use the cover presence switch 16
Use Intel BIOS guard 17
Use Smart USB Protection 17

Chapter 5. UEFI BIOS 19

What is UEFI BIOS 19
Enter the BIOS menu 19
Navigate in the BIOS interface 19
Change the display language of UEFI BIOS 19
Change the display mode of UEFI BIOS 20
Set the system date and time 20
Change the startup sequence 20
Enable or disable the configuration change detection feature 21
Enable or disable the automatic power-on feature 21
Enable or disable the smart power-on feature . . . 21
Enable or disable the ErP LPS compliance mode . . 21
Change the ITS performance mode 22
Change BIOS settings before installing a new operating system 22
Update UEFI BIOS 23
Recover from a BIOS update failure 23
Clear CMOS 23

Chapter 6. Diagnostics 25

Lenovo diagnostic tools 25
The Vantage app 25

Chapter 7. CRU replacement 27

What are CRUs 27
Replace a CRU 28
Computer cover 28
Optical drive 29
Front bezel 32
Primary storage drives 33
3.5-inch primary storage drive cage 41
M.2 solid-state drive and heat sink 42
M.2 solid-state drive bracket 48
Optical drive cage 49
Secondary storage drive 51
PCI-Express card 53
PCI-Express connector cable 54
Graphics card and plastic holder 56
Chassis beam 57
Memory module 59
Coin-cell battery 61
Power supply assembly 62
E-lock 64

Chapter 8. Help and support 67

Self-help resources 67
Call Lenovo 68
Before you contact Lenovo 68
Lenovo Customer Support Center 69

© Copyright Lenovo 2021, 2023

Purchase additional services. 70

Appendix A. Important safety information. 71

Appendix B. Accessibility and ergonomic information 85

Appendix C. Supplemental information about the Ubuntu operating system 87

Appendix D. Compliance and TCO Certified information. 89

Appendix E. Notices and trademarks. 101

About this documentation

- Illustrations in this documentation might look different from your product.
- Depending on the model, some optional accessories, features, and software programs might not be available on your computer.
- Depending on the version of operating systems and programs, some user interface instructions might not be applicable to your computer.
- Documentation content is subject to change without notice. Lenovo makes constant improvements on the documentation of your computer, including this *User Guide*. To get the latest documentation, go to: https://pcsupport.lenovo.com
- Microsoft® makes periodic feature changes to the Windows® operating system through Windows Update. As a result, some information in this documentation might become outdated. Refer to Microsoft resources for the latest information.

© Copyright Lenovo 2021, 2023

Chapter 1. Meet your computer

Front

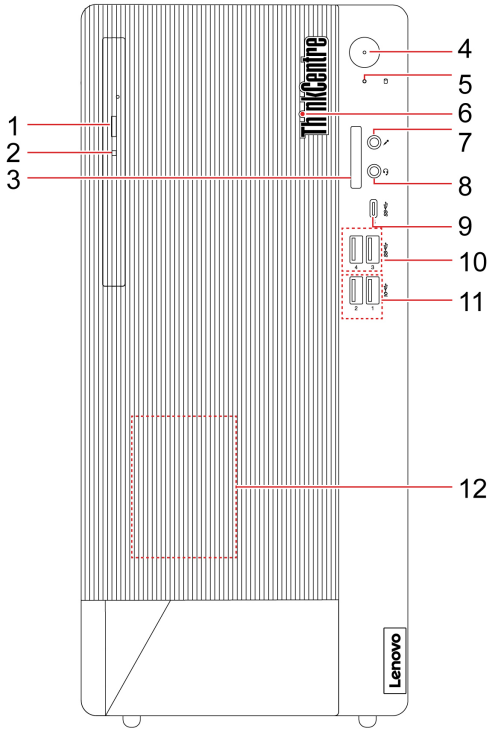

1. Optical drive eject button*	Eject the optical drive tray.
2. Optical drive activity indicator*	This indicator is on when the optical drive is in use.
3. SD-card slot*	Supported cards: • Secure Digital (SD) card • Secure Digital eXtended-Capacity (SDXC) UHS-1 card • Secure Digital High-Capacity (SDHC) UHS-1 card **Note:** Your computer does not support the content protection for recordable media (CPRM) feature for the SD card. See “Use a media card (for selected models)” on page 10.

© Copyright Lenovo 2021, 2023

4. Power button	Press to turn on the computer. To turn off the computer, open the **Start** menu, click **Power**, and then select **Shut down**. The indicator in the power button shows the system status of your computer. • **On:** The computer is on. • **Off:** The computer is off or in hibernation mode. • **Blinking:** The computer is in sleep mode. • **Breathing:** The computer is in modern standby mode. **Note:** Modern standby mode is supported on some models.
5. Storage drive activity indicator	This indicator is on when the storage drive is in use.
6. ThinkCentre® LED	This indicator is on when the computer is on.
7. Microphone connector	Connect a microphone.
8. Headset connector	Connect a headset or headphones to your computer.
9. USB-C® (3.2 Gen 1) connector	• Charge USB-C compatible devices with the output voltage and current of 5 V and 3 A. • Transfer data at USB 3.2 speed, up to 5 Gbps.
10. USB 3.2 connectors Gen 1	Connect USB-compatible devices, such as a USB keyboard, USB mouse, USB storage device, or USB printer.
11. USB 3.2 connectors Gen 2	Enable you to experience higher data transfer rate when you connect USB-compatible devices, such as a USB keyboard, USB mouse, USB storage device, or USB printer.
12. Internal speaker	Enable you to experience high-quality sound.

* for selected models

Statement on USB transfer rate

Depending on many factors such as the processing capability of the host and peripheral devices, file attributes, and other factors related to system configuration and operating environments, the actual transfer rate using the various USB connectors on this device will vary and will be slower than the data rate listed below for each corresponding device.

USB device	Data rate (Gbit/s)
3.2 Gen 1	5
3.2 Gen 2	10
3.2 Gen 2 × 2	20
Thunderbolt 3	40
Thunderbolt 4	40

Rear

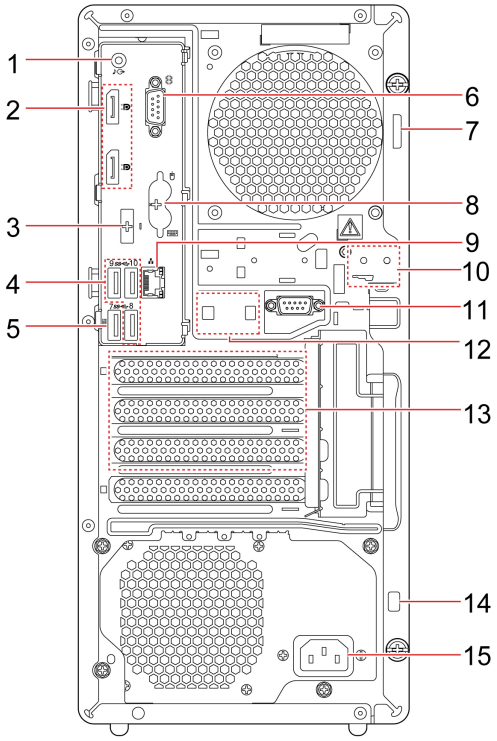

1. Audio line-out connector	Send audio signals from the computer to external devices, such as powered stereo speakers, headphones, or multimedia keyboards. To connect a stereo system or other external recording device, connect a cable between the audio line-in connector of the device and the audio line-out connector of the computer. **Note:** If your computer has both an audio line-out connector and a headset or headphone connector, always use the headset or headphone connector for earphones, headphones, or a headset. The headphone connector does not support headset microphones.
2. DisplayPort® out connectors	Send audio and video signals from the computer to another audio or video device, such as a high-performance monitor.
3. Optional connector*	Depending on the computer model, the connector might be a DisplayPort out connector, a USB-C connector, or an HDMI ™ out connector.
4. USB 3.2 connectors Gen 1	Connect USB-compatible devices, such as a USB keyboard, USB mouse, USB storage device, or USB printer.
5. USB 3.2 connector Gen 1	Connect USB-compatible devices, such as a USB keyboard, USB mouse, USB storage device, or USB printer. This connector supports the smart power-on feature. For more information, see “Enable or disable the smart power-on feature” on page 21.
6. Serial connector	Connect an external modem, a serial printer, or other devices that use a serial connector.
7. Padlock loop	Lock the computer cover through a padlock.
8. PS/2 keyboard and mouse connectors*	Connect a keyboard, a mouse, a trackball, or other pointing devices that use a Personal System/2 (PS/2) keyboard connector.

9. Ethernet connector	Connect to a local area network (LAN). When the green indicator is on, the computer is connected to a LAN. When the yellow indicator blinks, data is being transmitted.
10. E-lock slots	Lock the computer cover through an E-lock.
11. Serial connector*	Connect an external modem, a serial printer, or other devices that use a serial connector.
12. Smart cable clip slots	Lock devices (such as the keyboard and the mouse) to your computer through a smart cable clip.
13. PCI-Express card area	Install PCI-Express cards into this area to improve the operating performance of the computer. Depending on the computer model, the connectors in this area vary.
14. Security-lock slot	Lock your computer to a desk, table, or other fixtures through a Kensington-style cable lock.
15. Power cord connector	Connect the power cord to your computer for power supply.

* for selected models

Features and specifications

Dimensions	• Width: 170 mm (6.7 inches) • Height: 376 mm (14.8 inches) • Depth: 297.85 mm (11.7 inches)
Weight (without the package)	Maximum configuration as shipped: 7.5 kg (16.5 lb)
Hardware configuration	Type **Device Manager** in the Windows search box and then press Enter. Type the administrator password or provide confirmation if prompted.
Power supply	• 180-watt automatic voltage-sensing power supply • 300-watt automatic voltage-sensing power supply • 500-watt automatic voltage-sensing power supply
Electrical input	• Input voltage: From 100 V ac to 240 V ac • Input frequency: 50/60 Hz
Microprocessor	To view the microprocessor information of your computer, type **System** in the Windows search box and then press Enter.
Memory	Up to four double data rate 4 (DDR4) unbuffered dual inline memory modules (UDIMMs)
Storage device	• 2.5-inch hard disk drive* • 3.5-inch hard disk drive* • Up to two M.2 solid-state drives* • Intel® Optane™ memory* To view the storage drive capacity of your computer, type **Disk Management** in the Windows search box and then press Enter. **Note:** The storage drive capacity indicated by the system is less than the nominal capacity.
Video features	• The integrated graphics card supports the DisplayPort out connector. • The optional discrete graphics card provides an enhanced video experience and extended capabilities.
Audio features	The integrated audio card supports the following: • Audio line-out connector • Headset connector • Internal speaker • Microphone connector

Expansion	• Card reader* • Memory slots • M.2 solid-state drive slots • Optical drive* • PCI-Express card slot (physical link width x16; negotiable link width x4, x1) • PCI-Express x1 card slot • PCI-Express x16 graphics card slot • Storage drive cages*
Network features	• Bluetooth* • Ethernet LAN • Wireless LAN*

* for selected models

Chapter 2. Get started with your computer

Connect to networks

Your computer helps you connect to the world through a wired or wireless network.

Connect to the wired Ethernet

Connect your computer to a local network through the Ethernet connector on your computer with an Ethernet cable.

Connect to Wi-Fi networks (for selected models)

If your computer includes a wireless LAN module, you can connect your computer to Wi-Fi® networks. The wireless LAN module on your computer may support different standards. For some countries or regions, use of 802.11ax may be disabled according to local regulations.

1. Click the network icon in the Windows notification area. A list of available wireless networks is displayed.
2. Select a network available for connection. Provide required information, if needed.

Use the Vantage app

The preinstalled Vantage app is a customized one-stop solution to help you maintain your computer with automated updates and fixes, configure hardware settings, and get personalized support.

To access the Vantage app, type `Vantage` in the Windows search box.

Key features

The Vantage app enables you to:

- Know the device status easily and customize device settings.
- Download and install UEFI BIOS, firmware and driver updates to keep your computer up-to-date.
- Monitor your computer health, and secure your computer against outside threats.
- Scan your computer hardware and diagnose hardware problems.
- Look up warranty status (online).
- Access *User Guide* and helpful articles.

Notes:

- The available features vary depending on the computer model.
- The Vantage app makes periodic updates of the features to keep improving your experience with your computer. The description of features might be different from that on your actual user interface.

Use multimedia

Use your computer for business or entertainment with the devices (such as a camera, a monitor, or speakers).

Use audio

To enhance the audio experience, connect speakers, headphones, or a headset to the audio connector.

© Copyright Lenovo 2021, 2023

Adjust the volume

1. Click the volume icon in the Windows notification area on the taskbar.
2. Follow the on-screen instructions to adjust the volume. Click the speaker icon to mute the audio.

Change the sound settings

1. Type `Control Panel` in the Windows search box and then press Enter. View by category.
2. Click **Hardware and Sound → Sound**.
3. Change the settings as you prefer.

Connect an external display

Connect a projector or a monitor to your computer to give presentations or expand your workspace.

Connect a wireless display

Ensure that both your computer and the wireless display support Miracast®.

Press Windows logo key + K and then select a wireless display to connect.

Change display settings

1. Right-click a blank area on the desktop and select display settings.
2. Select the display that you want to configure and change display settings of your preference.

Chapter 3. Explore your computer

Manage power

Use the information in this section to achieve the best balance between performance and power efficiency.

Set power button behaviors

You can define what the power button does according to your preference. For example, by pressing the power button, you can turn off the computer or put the computer to sleep or hibernation mode.

To change what the power button does:

1. Right-click the battery status icon and select **Power Options → Change what the power buttons do**.
2. Change the settings as you prefer.

Set the power plan

For ENERGY STAR® compliant computers, the following power plan takes effect when your computers have been idle for a specified duration:

Default power plan (when plugged into ac power)

- Turn off the display: After 10 minutes
- Put the computer to sleep: After 25 minutes

To awaken the computer from Sleep mode, press any key on your keyboard.

To reset the power plan:

1. Type **Power Plan** in the Windows search box and then press Enter.
2. Choose or customize a power plan of your preference.

Transfer data

Quickly share your files using the built-in Bluetooth technology among devices with the same features. You also can install a disc or media card to transfer data.

Connect to a Bluetooth-enabled device (for selected models)

You can connect all types of Bluetooth-enabled devices to your computer, such as a keyboard, a mouse, a smartphone, or speakers. Place the device that you are attempting to connect to less than 10 meters (33 feet) from the computer.

1. Type `Bluetooth` in the Windows search box and then press Enter.
2. Turn on Bluetooth, if it is off.
3. Select a Bluetooth device, and then follow the on-screen instructions.

Your Bluetooth device and computer will automatically connect the next time if the two devices are in range of each other with Bluetooth turned on. You can use Bluetooth for data transfer or remote control and communication.

© Copyright Lenovo 2021, 2023

Use the optical drive (for selected models)

If your computer has an optical drive, read the following information.

Know the type of your optical drive

1. Type `Device Manager` in the Windows search box and then press Enter. Type the administrator password or provide confirmation, if prompted.
2. Select an optical drive, and then follow the on-screen instructions.

Install or remove a disc

1. With the computer on, press the eject button on the optical drive. The tray slides out of the drive.
2. Insert a disc into the tray or remove a disc from the tray, and then push the tray back into the drive.

Note: If the tray does not slide out of the drive when you press the eject button, turn off the computer. Then, insert a straightened paper clip into the emergency-eject hole adjacent to the eject button. Use the emergency eject only in an emergency.

Record a disc

1. Insert a recordable disc into the optical drive that supports recording.
2. Do one of the following:
   - Type `AutoPlay` in the Windows search box and then press Enter. Turn on **Use AutoPlay for all media and devices**.
   - Open Windows Media Player.
   - Double-click the ISO file.
3. Follow the on-screen instructions.

Use a media card (for selected models)

If your computer has a SD-card slot, read the following information.

Install a media card

1. Locate the SD-card slot.
2. Ensure that the metal contacts on the card are facing the ones in the SD-card slot. Insert the card firmly into the SD-card slot until it is secured in place.

Remove a media card

Attention: Before removing the card:

1. Click the triangular icon in the Windows notification area to show hidden icons. Right-click the icon prompting you to safely remove hardware and eject media.
2. Select the corresponding item to eject the card from the Windows operating system.
3. Press the card and remove it from your computer. Store the card safely for future use.

Use a smart cable clip (for selected models)

Note: You can purchase a smart cable clip from Lenovo.

Lock devices (such as the keyboard and the mouse) to your computer through a smart cable clip.

1. Insert the clip 1 into the cable-lock slot 4.
2. Pull the cables you want to lock through the dents in the smart cable clip.
3. Press the clip 2 into the cable-lock slot 3 until it snaps into position.

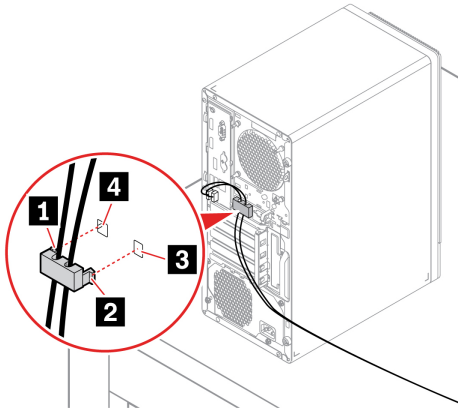

Purchase accessories

Lenovo has a number of hardware accessories and upgrades to help expand the capabilities of your computer. Options include memory modules, storage devices, network cards, power adapters, keyboards, mice, and more.

To shop at Lenovo, go to https://www.lenovo.com/accessories.

Chapter 4. Secure your computer and information

Lock the computer

Note: You are responsible for evaluating, selecting, and implementing the locking device and security feature. Lenovo makes no comments, judgments, or warranties about the function, quality, or performance of the locking device and security feature. You can purchase computer locks from Lenovo.

Padlock

Locking the computer cover through a padlock prevents unauthorized access to the inside of your computer.

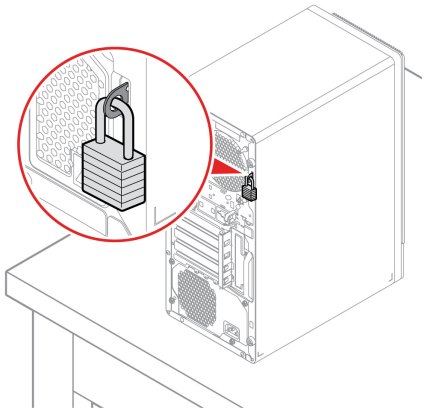

Kensington-style cable lock

Lock your computer to a desk, table, or other fixtures through a Kensington-style cable lock.

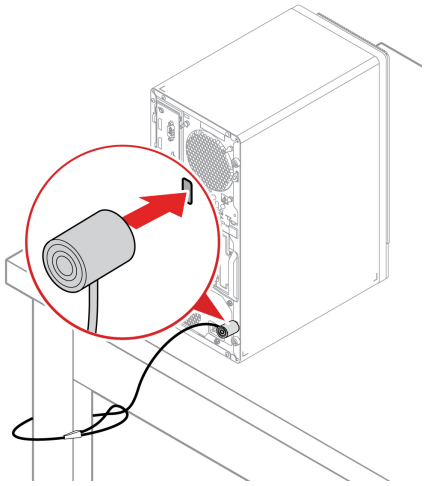

© Copyright Lenovo 2021, 2023

E-lock

Your computer might have a security lock solution installed to protect the computer from unauthorized tampering of the internal components. Using the E-Lock, you can mechanically lock or unlock the computer cover.

To enable or disable the E-Lock:

1. Restart the computer. When the logo screen is displayed, press F1 or Fn+F1.
2. Select **Security → Electronic Lock** to enable or disable the E-lock.
3. Press F10 or Fn+F10 to save the changes and exit.

   Note: Changes do not take effect until the setting is saved and the system is rebooted.

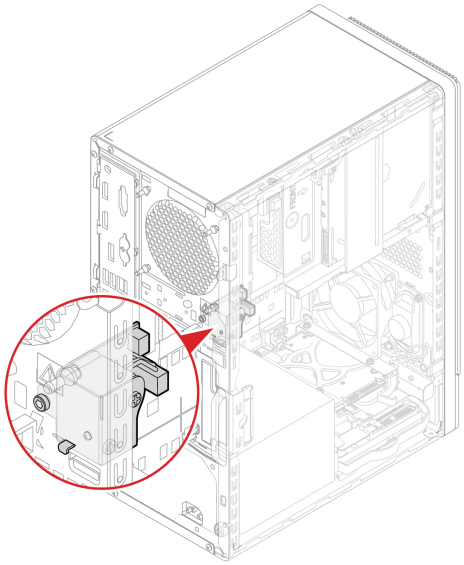

Use passwords

Password types

You can set the following passwords in UEFI (Unified Extensible Firmware Interface) BIOS (Basic Input/Output System) to prevent unauthorized access to your computer. However, you are not prompted to enter any UEFI BIOS password when your computer resumes from sleep mode.

- Power-on password

  When a power-on password is set, you are prompted to enter a valid password each time the computer is turned on. The computer cannot be used until the valid password is entered.

- Supervisor password

  Setting a supervisor password deters unauthorized users from changing configuration settings. If you are responsible for maintaining the configuration settings of several computers, you might want to set a supervisor password.

  When a supervisor password is set, you are prompted to enter a valid password each time you try to enter the BIOS menu.

  If both the power-on password and supervisor password are set, you can enter either password. However, you must use your supervisor password to change any configuration settings.

- Hard disk password

  Setting a hard disk password prevents unauthorized access to the data on the storage drive. When a hard disk password is set, you are prompted to enter a valid password each time you try to access the storage drive.

  Note: After you set a hard disk password, your data on the storage drive is protected even if the storage drive is removed from one computer and installed in another.

- System management password (for selected models)

  You can enable the system management password to have the same authority as the supervisor password to control security related features. To customize the authority of the system management password through the UEFI BIOS menu:

  1. Restart the computer. When the logo screen is displayed, press F1 or Fn+F1.
  2. Select **Security → System Management Password Access Control**.
  3. Follow the on-screen instructions.

  If you have set both the supervisor password and the system management password, the supervisor password overrides the system management password.

Set, change, and remove a password

Before you start, print these instructions.

1. Restart the computer. When the logo screen is displayed, press F1 or Fn+F1.
2. Select **Security**.
3. Depending on the password type, select **Set Supervisor Password**, **Set Power-On Password**, **Set System Management Password**, or **Hard Disk Password** and press Enter.
4. Follow the on-screen instructions to set, change, or remove a password.
5. Press F10 or Fn+F10 to save the changes and exit.

You should record your passwords and store them in a safe place. If you forget the passwords, contact a Lenovo-authorized service provider.

Note: If the hard disk password is forgotten, Lenovo cannot remove the password or recover data from the storage drive.

Use software security solutions

This section provides software solutions to secure your computer and information.

Use Windows firewalls

A firewall can be hardware, software, or a combination of both depending on the level of security required. Firewalls work on a set of rules to determine which inbound and outbound connections are authorized. If the computer is preinstalled with a firewall program, it helps protect against computer Internet security threats, unauthorized access, intrusions, and Internet attacks. It also protects your privacy. For more information about how to use the firewall program, refer to the help system of your firewall program.

To use Windows firewalls:

1. Type `Control Panel` in the Windows search box and then press Enter. View by large icons or small icons.
2. Click **Windows Defender Firewall**, and then follow the on-screen instructions.

Use Computrace Agent software embedded in firmware (for selected models)

The Computrace Agent software is an IT asset management and computer theft recovery solution. The software detects if changes have been made on the computer, such as hardware, software, or the computer call-in location. You might have to purchase a subscription to activate the Computrace Agent software.

Use BIOS security solutions

This section provides BIOS solutions to secure your computer and information.

Erase all storage drive data

It is recommended that you erase all storage drive data before recycling a storage drive or the computer.

To erase all storage drive data:

1. Set a hard disk password for the storage drive you will recycle. See “Use passwords” on page 14.
2. Restart the computer. When the logo screen is displayed, press F1 or Fn+F1.
3. Select **Security → Hard Disk Password → Security Erase HDD Data** and press Enter.
4. Select the storage drive you will recycle and press Enter.
5. A message is displayed, prompting you to confirm the operation. Select **Yes** and press Enter. The erasing process begins.

   Note: During the erasing process, the power button and the keyboard are disabled.
6. After the erasing process is completed, a message is displayed, prompting you to reset the system. Select **Continue**.

   Note: Depending on the storage drive capacity, the erasing process will take half an hour to three hours.
7. After the resetting process is completed, one of the following will happen:
   - If the data on the system storage drive is erased, you will be prompted that no operating system is available.
   - If the data on the non-system storage drive is erased, the computer restarts automatically.

Use the cover presence switch

The cover presence switch prevents the computer from logging in to the operating system when the computer cover is not properly installed or closed.

To enable the cover presence switch connector on the system board:

1. Restart the computer. When the logo screen is displayed, press F1 or Fn+F1.
2. Select **Security → Cover Tamper Detected** and press Enter.
3. Select **Enabled** and press Enter.
4. Press F10 or Fn+F10 to save the changes and exit.

If the cover presence switch is enabled and the computer cover is not correctly installed or closed, an error message will be displayed when you turn on the computer. To bypass the error message and log in to the operating system:

1. Properly install or close the computer cover.
2. Enter the BIOS menu, save and then exit.

Use Intel BIOS guard

The Intel® BIOS Guard module cryptographically verifies all BIOS updates. This hardware-based security helps prevent software and malware attacks on the computers BIOS.

Use Smart USB Protection

The Smart USB Protection function is a security function that helps prevent data from being copied from the computer to USB storage devices connected to the computer. You can set the Smart USB Protection function to one of the following modes:

- **Disabled** (default setting): You can use the USB storage devices without limitation.
- **Read Only**: You cannot copy data from the computer to the USB storage devices. However, you can access or modify data on the USB storage devices.
- **No Access**: You cannot access the USB storage devices from the computer.

To configure the Smart USB Protection function:

1. Restart the computer. When the logo screen is displayed, press F1 or Fn+F1.
2. Select **Security → Smart USB Protection** and press Enter.
3. Select the desired setting and press Enter.
4. Press F10 or Fn+F10 to save the changes and exit.

Chapter 5. UEFI BIOS

This chapter provides information about configuring and updating UEFI BIOS, and clearing CMOS.

What is UEFI BIOS

Note: The operating system settings might override any similar settings in UEFI BIOS.

UEFI BIOS is the first program that the computer runs when the computer is turned on. UEFI BIOS initializes the hardware components and loads the operating system and other programs. Your computer comes with a setup program with which you can change UEFI BIOS settings.

Enter the BIOS menu

Restart the computer. When the logo screen is displayed, press F1 or Fn+F1 to enter the BIOS menu.

Note: If you have set BIOS passwords, enter the correct passwords when prompted. You also can select **No** or press Esc to skip the password prompt and enter the BIOS menu. However, you cannot change the system configurations that are protected by passwords.

Navigate in the BIOS interface

Attention: The default configurations are already optimized for you in **boldface**. Improper change of the configurations might cause unexpected results.

Depending on your keyboard, you can navigate in the BIOS interface by pressing the following keys, or combinations of Fn and the following keys:

Keys	Description
F1 or Fn+F1	Display the General Help screen.
Esc or Fn+Esc	Exit the submenu and return to the parent menu.
↑ ↓ or Fn+↑ ↓	Locate an item.
← → or Fn+← →	Select a tab.
+/– or Fn++/–	Change to a higher or lower value.
Enter	Enter the selected tab or submenu.
F9 or Fn+F9	Restore to the default settings.
F10 or Fn+F10	Save your configuration and exit.

Change the display language of UEFI BIOS

UEFI BIOS supports three or four display languages: English, French, simplified Chinese, and Russian (for selected models).

To change the display language of UEFI BIOS:

1. Select **Main → Language** and press Enter.
2. Set the display language as desired.

© Copyright Lenovo 2021, 2023

Change the display mode of UEFI BIOS

You can use UEFI BIOS in the graphic mode or the text mode according to your needs.

- Text mode: The keys on the keyboard used to perform various tasks are displayed at the bottom of the screen.
- Graphic mode (for selected models): In addition to the keyboard, you also can use the mouse to make selections.

To change the display mode of UEFI BIOS:

1. Restart the computer. When the logo screen is displayed, press F1 or Fn+F1.
2. Select **Main → Setup Mode Select** and press Enter.
3. Set the display mode as desired.

Set the system date and time

1. Restart the computer. When the logo screen is displayed, press F1 or Fn+F1.
2. Select **Main → System Time & Date** and press Enter.
3. Set the system date and time as desired.
4. Press F10 or Fn+F10 to save the changes and exit.

Change the startup sequence

If the computer does not start up from a device as expected, you can change the startup device sequence permanently or select a temporary startup device.

Change the startup device sequence permanently

1. Depending on the type of the storage device, do one of the following:
   - If the storage device is internal, go to step 2.
   - If the storage device is a disc, ensure that the computer is on or turn on the computer. Then, insert the disc into the optical drive.
   - If the storage device is an external device other than a disc, connect the storage device to the computer.
2. Restart the computer. When the logo screen is displayed, press F1 or Fn+F1.
3. Select **Startup**, and then follow the on-screen instructions to change the startup sequence.
4. Press F10 or Fn+F10 to save the changes and exit.

Select a temporary startup device

Note: Not all discs and storage drives are bootable.

1. Depending on the type of the storage device, do one of the following:
   - If the storage device is internal, go to step 2.
   - If the storage device is a disc, ensure that the computer is on or turn on the computer. Then, insert the disc into the optical drive.
   - If the storage device is an external device other than a disc, connect the storage device to the computer.
2. Restart the computer. When the logo screen is displayed, press F12 or Fn+F12.
3. Select the storage device as desired and press Enter.

If you want to change the startup device sequence permanently, select **Enter Setup** on Startup Device Menu and press Enter to enter the BIOS menu.

Enable or disable the configuration change detection feature

If you enable configuration change detection, when the POST detects configuration changes of some hardware devices (such as storage drives or memory modules), an error message will be displayed when you turn on the computer.

To enable or disable the configuration change detection feature:

1. Restart the computer. When the logo screen is displayed, press F1 or Fn+F1.
2. Select **Security → Configuration Change Detection** and press Enter.
3. Enable or disable the feature as desired.
4. Press F10 or Fn+F10 to save the changes and exit.

To bypass the error message and log in to the operating system, press F2 or Fn+F2. To clear the error message, enter the BIOS menu, save and then exit.

Enable or disable the automatic power-on feature

The Automatic Power On item in UEFI BIOS provides various options for you to make your computer start up automatically.

To enable or disable the automatic power-on feature:

1. Restart the computer. When the logo screen is displayed, press F1 or Fn+F1.
2. Select **Power → Automatic Power On** and press Enter.
3. Select the feature as desired and press Enter.
4. Enable or disable the feature as desired.
5. Press F10 or Fn+F10 to save the changes and exit.

Enable or disable the smart power-on feature

Ensure that the keyboard is connected to a USB connector supporting the smart power-on feature. With the smart power-on feature enabled, you can start up or wake up the computer from the hibernation mode by pressing Alt+P.

To enable or disable the smart power-on feature:

1. Restart the computer. When the logo screen is displayed, press F1 or Fn+F1.
2. Select **Power → Smart Power On** and press Enter.
3. Enable or disable the feature as desired.
4. Press F10 or Fn+F10 to save the changes and exit.

Enable or disable the ErP LPS compliance mode

Lenovo computers meet the eco-design requirements of the ErP Lot 3 regulation. For more information, go to:
https://www.lenovo.com/us/en/compliance/eco-declaration

You can enable the ErP LPS compliance mode to reduce the consumption of electricity when the computer is off or in sleep mode.

To enable or disable the ErP LPS compliance mode:

1. Restart the computer. When the logo screen is displayed, press F1 or Fn+F1.
2. Select **Power → Enhanced Power Saving Mode** and press Enter.
3. Depending on whether you select **Enabled** or **Disabled**, do one of the following:
   - If you select **Enabled**, press Enter. Then, select **Power → Automatic Power On** and press Enter. Check whether the Wake on LAN feature is disabled automatically. If no, disable it.
   - If you select **Disabled**, press Enter. Then, go to the next step.
4. Press F10 or Fn+F10 to save the changes and exit.

When the ErP LPS compliance mode is enabled, you can wake up the computer by doing one of the following:

- Press the power button.
- Enable the Wake Up on Alarm feature to make the computer wake up at a set time.

To meet the off mode requirement of ErP compliance, you need to disable the Fast Startup function.

1. Go to **Control Panel** and view by large icons or small icons.
2. Click **Power Options → Choose what the power buttons do → Change settings that are currently unavailable**.
3. Clear the **Turn on fast startup (recommended)** option from the **Shutdown settings** list.

Change the ITS performance mode

You can adjust the acoustic and thermal performance of your computer by changing the ITS performance mode. Three choices are available:

- **Best Performance** (default setting): The computer works at the best system performance with normal acoustic level.
- **Best Experience**: The computer works at the best experience with balanced noise and better performance.
- **Full Speed**: All fans in the computer will run at full speed.

To change the ITS performance mode:

1. Restart the computer. When the logo screen is displayed, press F1 or Fn+F1.
2. Select **Power → Intelligent Cooling** and press Enter.
3. Select **Performance Mode** and press Enter.
4. Set the performance mode as desired.
5. Press F10 or Fn+F10 to save the changes and exit.

Change BIOS settings before installing a new operating system

BIOS settings vary by operating system. Change the BIOS settings before installing a new operating system.

Microsoft constantly makes updates to the Windows operating system. Before installing a particular Windows version, check the compatibility list for the Windows version. For details, go to: https://support.lenovo.com/us/en/solutions/windows-support

To change the BIOS settings:

1. Restart the computer. When the logo screen is displayed, press F1 or Fn+F1.

2. From the main interface, select **Security → Secure Boot** and press Enter.
3. Depending on the operating system to be installed, do one of the following:
   - To install a Windows operating system that supports secure boot, select **Enabled** for **Secure Boot**.
   - To install an operating system that does not support secure boot, such as some Linux operating systems, select **Disabled** for **Secure Boot**.
4. Press F10 or Fn+F10 to save the changes and exit.

Update UEFI BIOS

When you install a new program, device driver, or hardware component, you might need to update UEFI BIOS. You can update the BIOS from your operating system or a flash update disc (supported only on selected models).

Download and install the latest UEFI BIOS update package by one of the following methods:

- From the Vantage app:

  Open the Vantage app to check the available update packages. If the latest UEFI BIOS update package is available, follow the on-screen instructions to download and install the package.
- From the Lenovo Support Web site:
  1. Go to https://pcsupport.lenovo.com.
  2. Download the flash BIOS update driver for the operating system version or the ISO image version (used to create a flash update disc). Then, download the installation instructions for the flash BIOS update driver you have downloaded.
  3. Print the installation instructions and follow the instructions to update the BIOS.

Recover from a BIOS update failure

1. Remove all media from the drives and turn off all connected devices.
2. Insert the BIOS update disc into the optical drive, and then turn off the computer.
3. Disconnect all power cords from electrical outlets. Then, remove any parts that impede access to the Clear CMOS jumper.
4. Move the jumper from the standard position to the maintenance position.
5. Reconnect the power cords for the computer and the monitor to electrical outlets.
6. Turn on the computer and the monitor. When the computer beeps, the recovery process begins.
7. After the recovery process is completed, the computer will be turned off automatically.

   Note: Depending on the computer model, the recovery process will take two to three minutes.
8. Disconnect all power cords from electrical outlets.
9. Move the jumper back to the standard position.
10. Reinstall all the parts that have been removed. Then, reconnect the power cords for the computer and the monitor to electrical outlets.
11. Turn on the computer and the monitor. When the logo screen is displayed, press F1 or Fn+F1.
12. To prevent data loss, ensure that BIOS settings are restored to an earlier point.

Clear CMOS

1. Remove all media from the drives and turn off all connected devices and the computer.

2. Disconnect all power cords from electrical outlets. Then, remove any parts that impede access to the Clear CMOS jumper.
3. Move the jumper from the standard position to the maintenance position.
4. Reconnect the power cords for the computer and the monitor to electrical outlets.
5. Turn on the computer and the monitor. When the computer beeps, wait for approximately 10 seconds.
6. Turn off the computer by holding the power button for approximately four seconds.
7. Disconnect all power cords from electrical outlets.
8. Move the jumper back to the standard position.
9. Reinstall all the parts that have been removed. Then, reconnect the power cords for the computer and the monitor to electrical outlets.
10. Turn on the computer and the monitor. When the logo screen is displayed, press F1 or Fn+F1.
11. To prevent data loss, ensure that BIOS settings are restored to an earlier point.

Chapter 6. Diagnostics

Use diagnostic solutions to test hardware components and report operating-system-controlled settings that interfere with the correct operation of your computer.

Lenovo diagnostic tools

For information about Lenovo diagnostic tools, go to:
https://pcsupport.lenovo.com/lenovodiagnosticsolutions

The Vantage app

The Vantage app is preinstalled on your computer. To diagnose problems with the Vantage app:

1. Type `Vantage` in the Windows search box and press Enter.
2. Follow the on-screen instructions and run a hardware scan.

If you are unable to isolate and resolve the problem after running the Vantage app, save and print the log files created by the program. You might need the log files when you speak to a Lenovo technical support representative.

© Copyright Lenovo 2021, 2023

Chapter 7. CRU replacement

What are CRUs

Customer Replaceable Units (CRUs) are parts that can be upgraded or replaced by the customer. Lenovo computers contain the following types of CRUs:

- **Self-service CRUs:** Refer to parts that can be installed or replaced easily by customer themselves or by trained service technicians at an additional cost.
- **Optional-service CRUs:** Refer to parts that can be installed or replaced by customers with a greater skill level. Trained service technicians can also provide service to install or replace the parts under the type of warranty designated for the customer's machine.

If you intend on installing the CRU, Lenovo will ship the CRU to you. CRU information and replacement instructions are shipped with your product and are available from Lenovo at any time upon request. You might be required to return the defective part that is replaced by the CRU. When return is required: (1) return instructions, a prepaid shipping label, and a container will be included with the replacement CRU; and (2) you might be charged for the replacement CRU if Lenovo does not receive the defective CRU within thirty (30) days of your receipt of the replacement CRU. For full details, see the Lenovo Limited Warranty documentation at:
https://www.lenovo.com/warranty/llw_02

Refer to the following CRU list for your computer.

Self-service CRUs

- Chassis beam
- Computer cover
- Front bezel
- Graphics card*
- Graphics card holder*
- Keyboard*
- M.2 solid-state drive*
- M.2 solid-state drive bracket*
- M.2 solid-state drive heatsink*
- Memory module
- Mouse*
- Optical drive*
- Optical drive bracket*
- Optical drive cage*
- PCI-Express card*
- PCI-Express connector cable*
- Power cord
- Primary storage drives*
- Primary storage drive brackets*
- Primary storage drive cages*

© Copyright Lenovo 2021, 2023

- Secondary storage drive*
- Secondary storage drive bracket*
- Secondary storage drive cage*
- Storage drive converter*
- Smart cable clip*

Optional-service CRUs

- Coin-cell battery
- E-lock*
- Power supply assembly

* for selected models

Replace a CRU

Follow the replacement procedure to replace a CRU.

Computer cover

Prerequisite

Before you start, read Appendix A “Important safety information” on page 71 and print the following instructions.



Before you open the computer cover, turn off the computer and wait several minutes until the computer is cool.

Replacement procedure

1. Remove any media from the drives and turn off all connected devices and the computer.
2. Disconnect all power cords from electrical outlets and disconnect all cables from the computer.
3. Unlock any locking device that secures the computer cover.
4. Lay down the computer with the computer cover facing up.

5. Remove the computer cover.

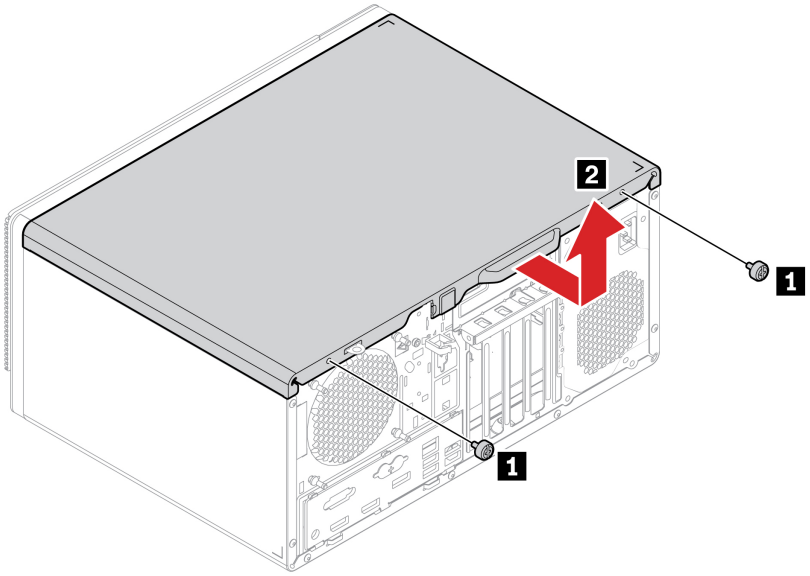

6. Install the computer cover.

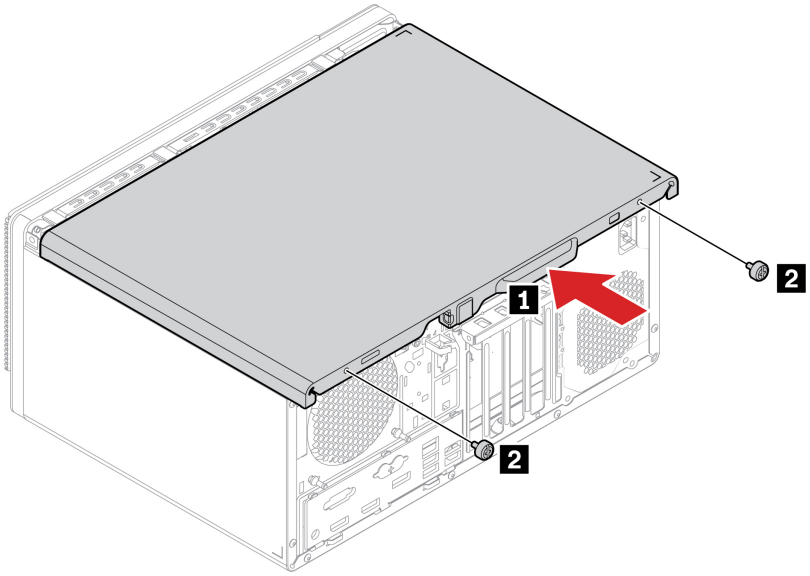

7. Place the computer in an upright position.
8. Reinstall all the removed parts. Then, reconnect the power cord and all disconnected cables to the computer.

   Note: If a locking device is available, use it to lock the computer.

Optical drive

Prerequisite

Before you start, read Appendix A “Important safety information” on page 71 and print the following instructions.

Replacement procedure

1. Remove the computer cover. See “Computer cover” on page 28.
2. Disconnect the signal cable and the power cable from the optical drive.
3. Remove the optical drive.

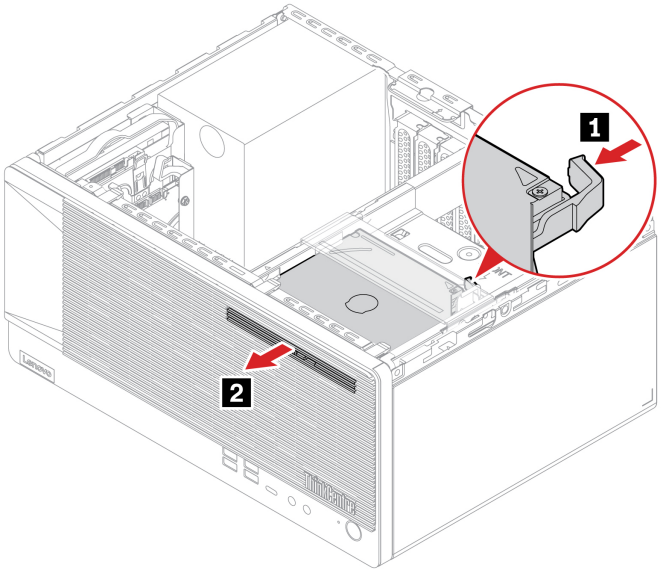

4. Remove the optical drive bracket.

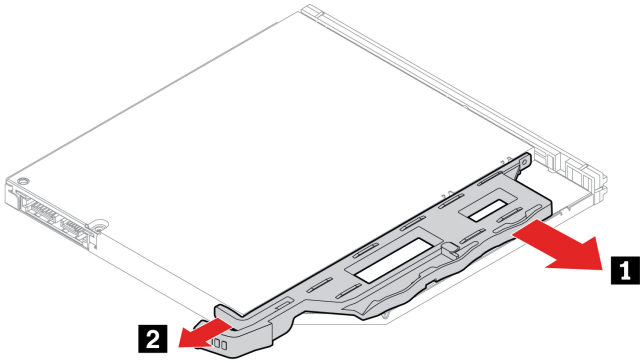

5. Install the optical drive bracket.

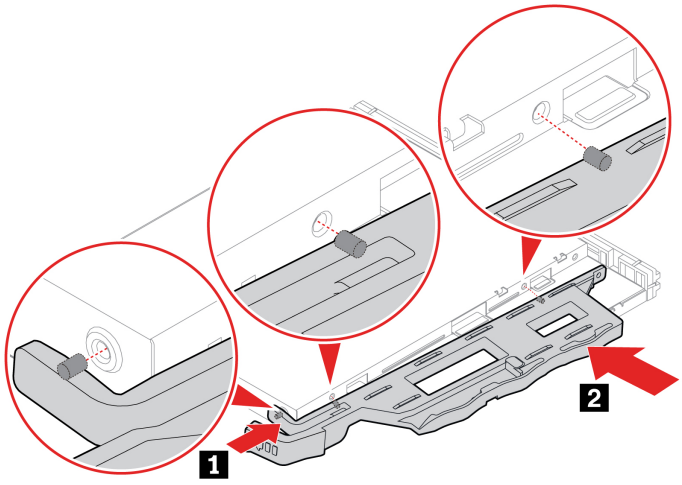

6. To install a new optical drive, if there is a plastic shield in the front bezel, remove the plastic shield first as shown.

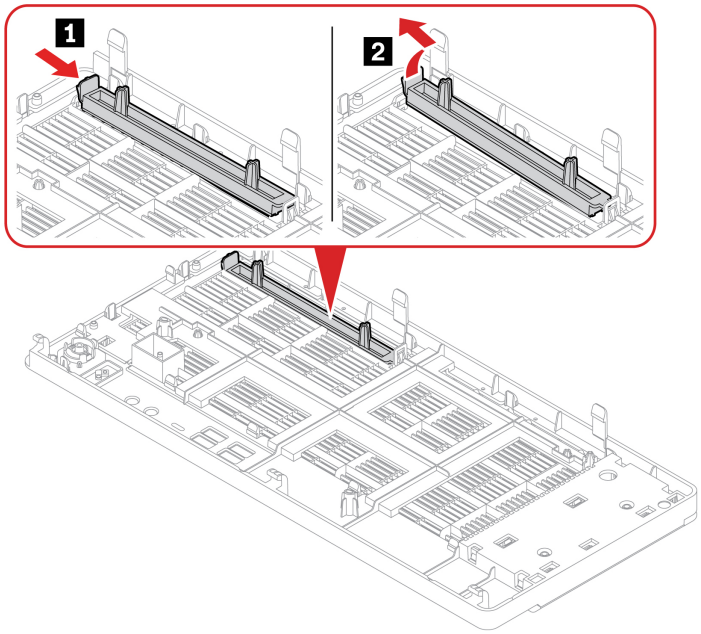

7. Install the optical drive.

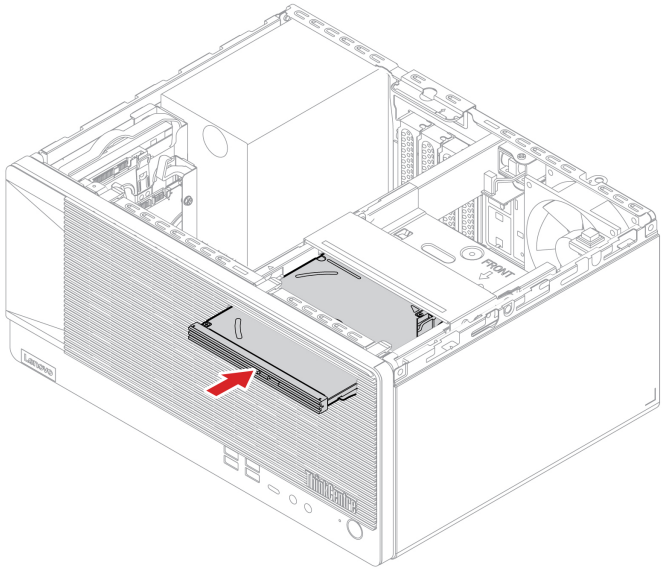

8. Connect the signal cable and the power cable to the optical drive.
9. Reinstall all the removed parts. Then, reconnect the power cord and all disconnected cables to the computer.

Front bezel

Prerequisite

Before you start, read Appendix A “Important safety information” on page 71 and print the following instructions.

Replacement procedure

1. Remove the computer cover. See “Computer cover” on page 28.
2. Remove the optical drive. See “Optical drive” on page 29.

3. Remove the front bezel.

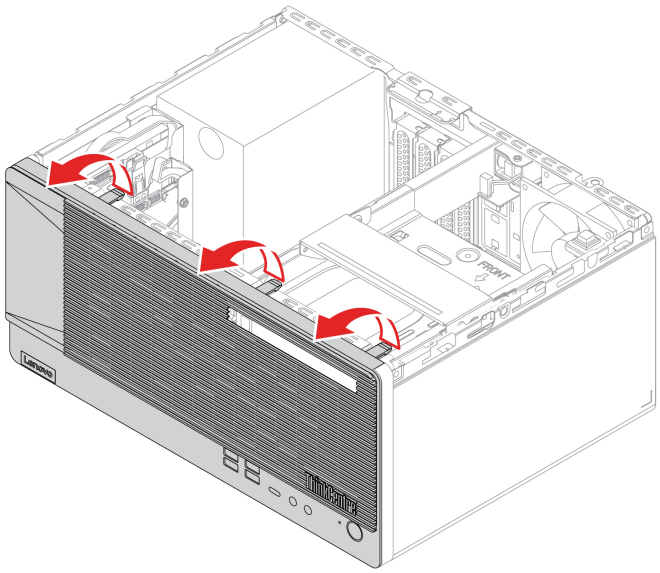

4. Install the front bezel.

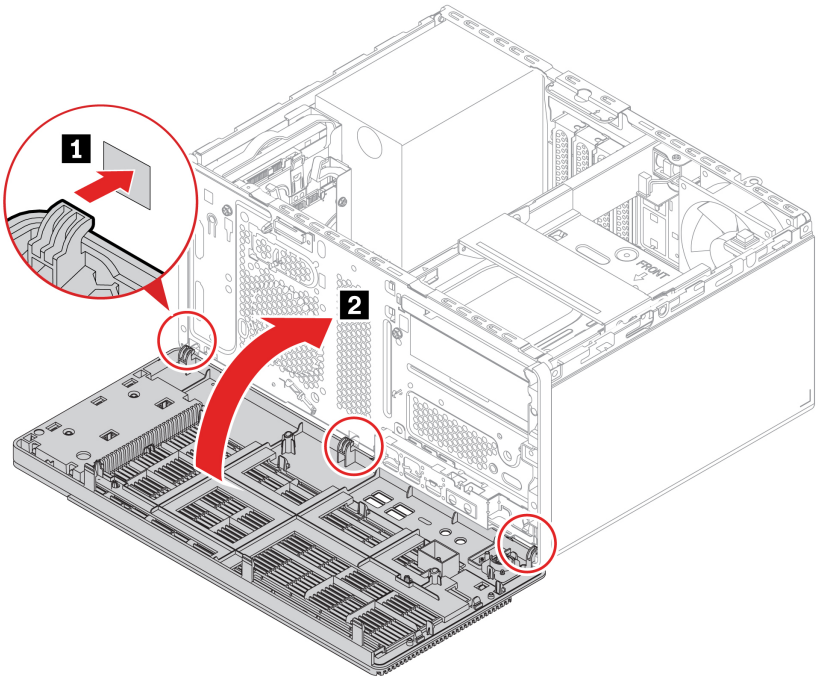

5. Reinstall all the removed parts. Then, reconnect the power cord and all disconnected cables to the computer.

Primary storage drives

Prerequisite

Before you start, read Appendix A “Important safety information” on page 71 and print the following instructions.

Attention: The internal storage drive is sensitive. Inappropriate handling might cause damage and permanent loss of data. When handling the internal storage drive, observe the following guidelines:

- Replace the internal storage drive only for upgrade or repair. The internal storage drive is not designed for frequent changes or replacement.
- Before replacing the internal storage drive, make a backup copy of all the data that you want to keep.
- Do not touch the contact edge of the internal storage drive. Otherwise, the internal storage drive might get damaged.
- Do not apply pressure to the internal storage drive.
- Do not make the internal storage drive subject to physical shocks or vibration. Put the internal storage drive on a soft material, such as cloth, to absorb physical shocks.

2.5-inch primary storage drive, bracket, and cage

1. Remove the computer cover. See “Computer cover” on page 28.
2. Disconnect the signal cable and the power cable from the 2.5-inch primary storage drive.
3. Slide the 2.5-inch primary storage drive cage upward to release it from the 3.5-inch primary storage drive cage.

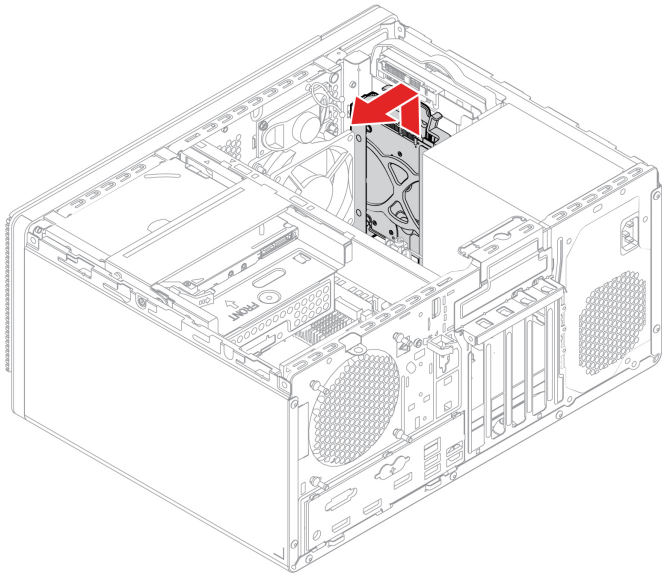

4. Remove the 2.5-inch primary storage drive with the bracket from the cage.

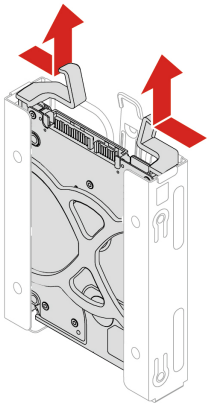

5. Remove the 2.5-inch primary storage drive from the bracket.

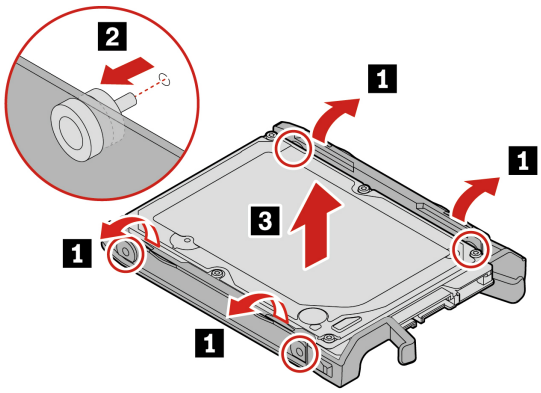

6. Install the 2.5-inch storage drive to the bracket.

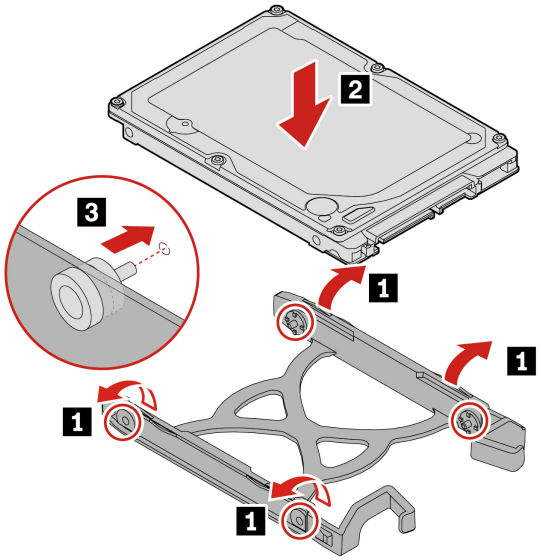

7. Install the storage drive with the bracket to the cage.

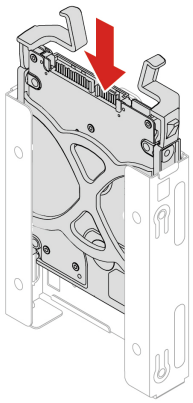

8. Install the 2.5-inch primary storage drive cage to the 3.5-inch primary storage drive cage.

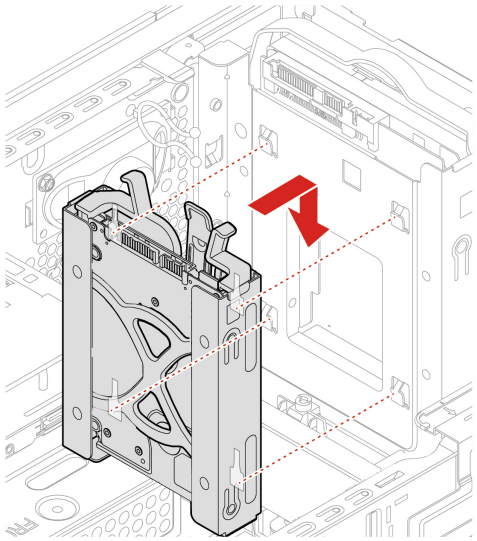

9. Connect the signal cable and the power cable to the storage drive.
10. Reinstall all the removed parts. Then, reconnect the power cord and all disconnected cables to the computer.

3.5-inch primary storage drive and bracket

1. Remove the computer cover. See “Computer cover” on page 28.
2. Disconnect the signal cable and the power cable from the 3.5-inch primary storage drive.
3. Pull the handle of the storage drive bracket to remove the storage drive with the bracket from the 3.5-inch primary storage drive cage.

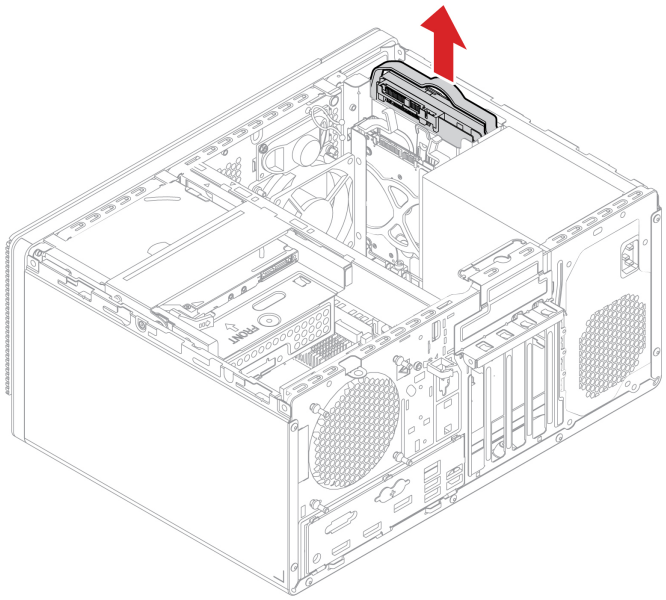

4. Remove the 3.5-inch primary storage drive from the bracket.

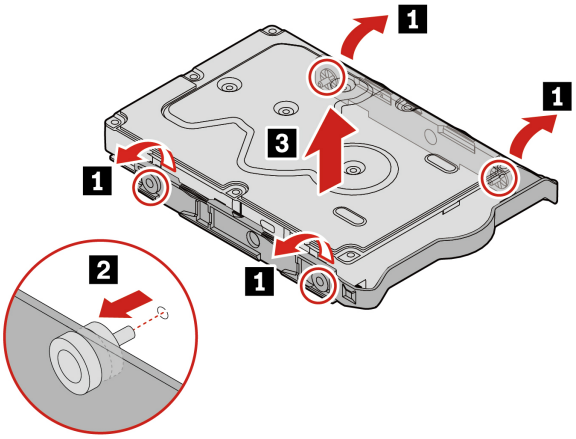

5. Install the 3.5-inch primary storage drive to the bracket.

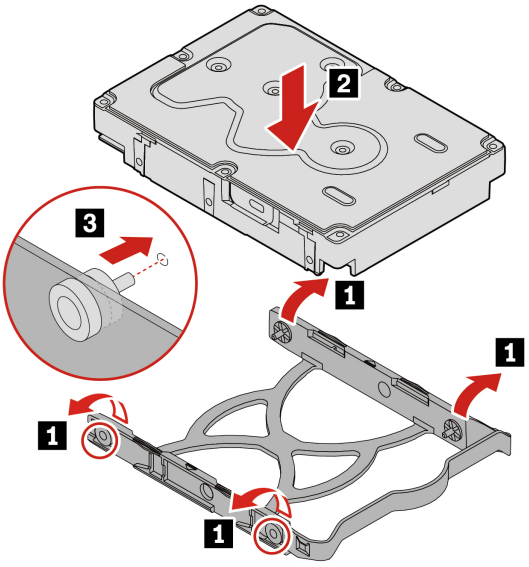

6. Install the storage drive with the bracket to the 3.5-inch primary storage drive cage.

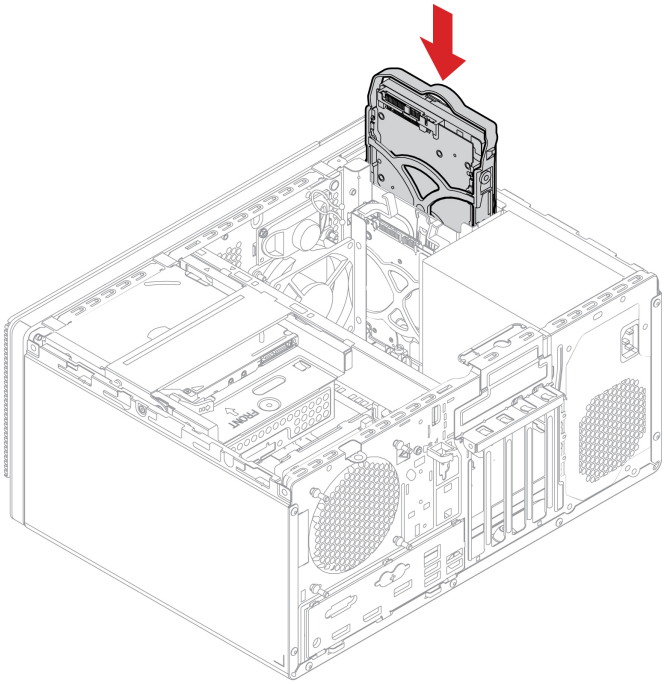

7. Connect the signal cable and the power cable to the storage drive.
8. Reinstall all the removed parts. Then, reconnect the power cord and all disconnected cables to the computer.

2.5-inch primary storage drive, storage drive converter, and bracket

1. Remove the computer cover. See “Computer cover” on page 28.
2. Disconnect the signal cable and the power cable from the 2.5-inch primary storage drive.
3. Pull the handle of the bracket to remove the storage drive converter with the bracket from the 3.5-inch primary storage drive cage.

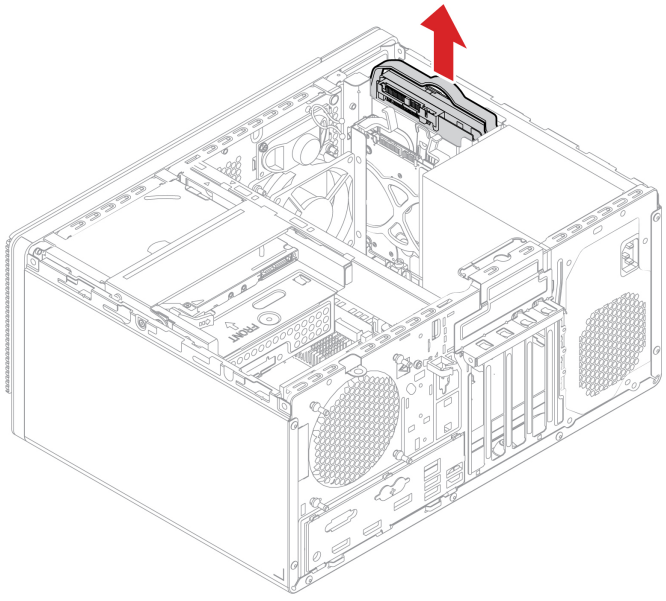

4. Remove the storage drive converter from the bracket.

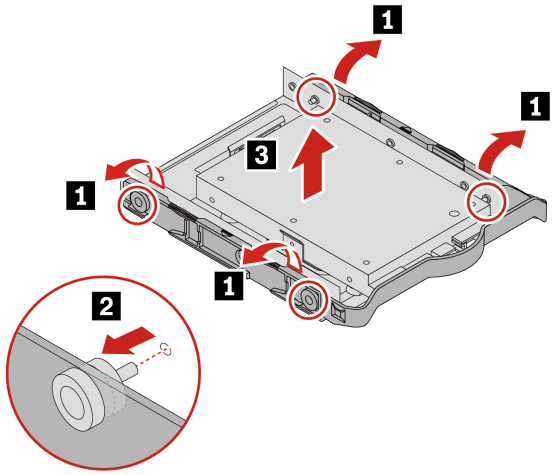

5. Remove the 2.5-inch primary storage drive from the storage drive converter.

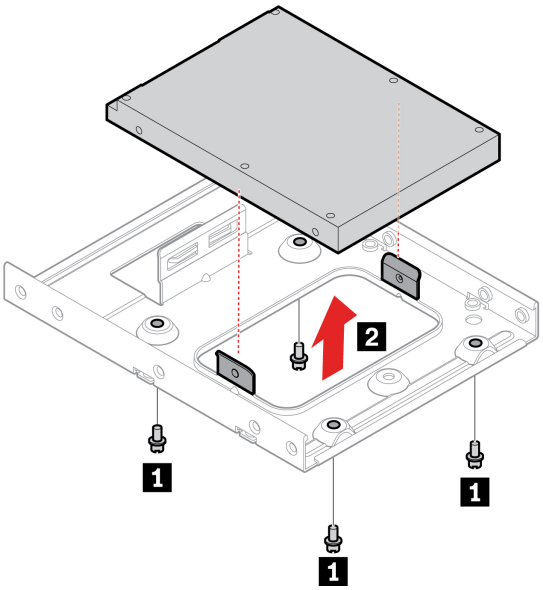

6. Install the 2.5-inch primary storage drive to the storage drive converter.

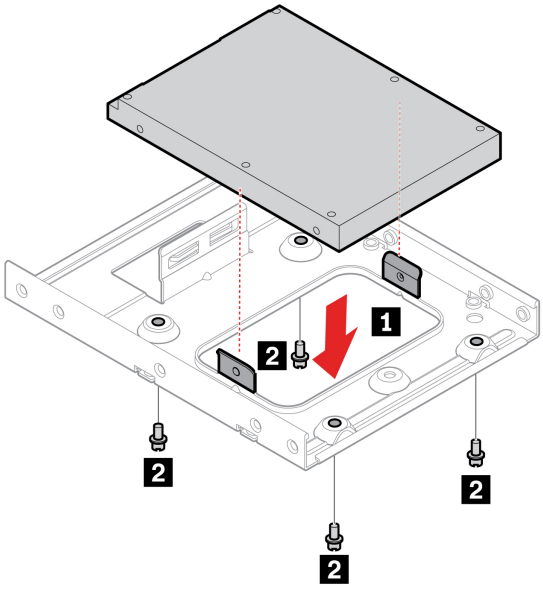

7. Install the storage drive converter to the bracket.

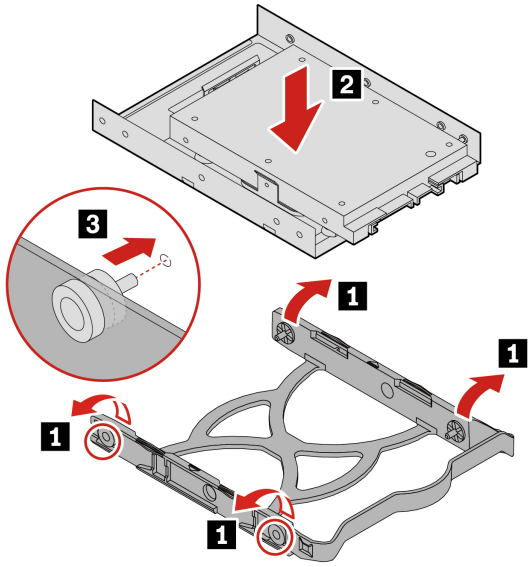

8. Install the storage drive converter with the bracket to the 3.5-inch primary storage drive cage.

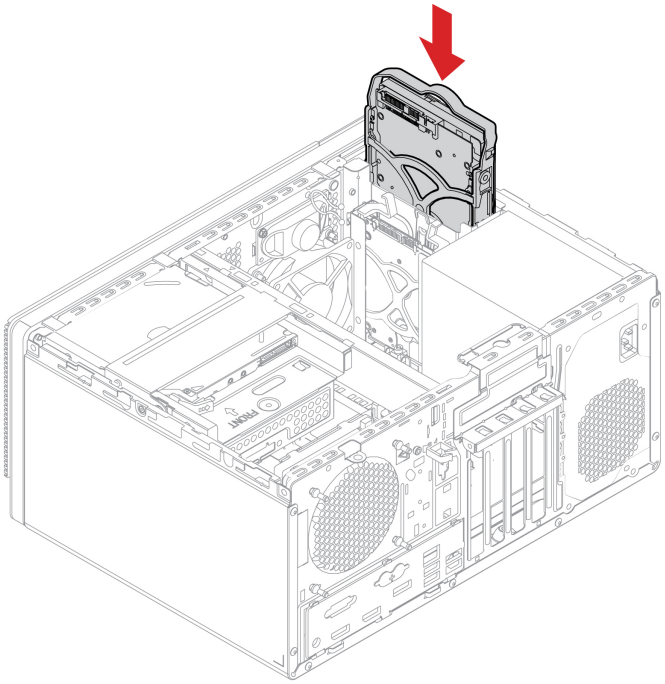

9. Connect the signal cable and the power cable to the storage drive.
10. Reinstall all the removed parts. Then, reconnect the power cord and all disconnected cables to the computer.

3.5-inch primary storage drive cage

Prerequisite

Before you start, read Appendix A “Important safety information” on page 71 and print the following instructions.

Attention: The internal storage drive is sensitive. Inappropriate handling might cause damage and permanent loss of data. When handling the internal storage drive, observe the following guidelines:

- Replace the internal storage drive only for upgrade or repair. The internal storage drive is not designed for frequent changes or replacement.
- Before replacing the internal storage drive, make a backup copy of all the data that you want to keep.
- Do not touch the contact edge of the internal storage drive. Otherwise, the internal storage drive might get damaged.
- Do not apply pressure to the internal storage drive.
- Do not make the internal storage drive subject to physical shocks or vibration. Put the internal storage drive on a soft material, such as cloth, to absorb physical shocks.

Replacement procedure

1. Remove the computer cover. See “Computer cover” on page 28.
2. Remove the optical drive. See “Optical drive” on page 29.
3. Remove the front bezel. See “Front bezel” on page 32.
4. Remove the primary storage drives. See “Primary storage drives” on page 33.

5. Remove the two screws that secure the 3.5-inch primary storage drive cage to the chassis. Then, lift the cage out of the chassis.

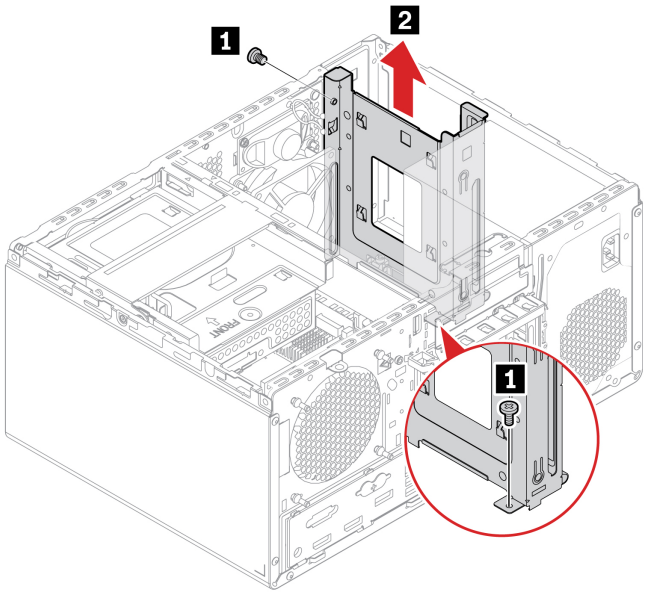

6. Install the 3.5-inch primary storage drive cage into the chassis. Then, install the two screws to secure the cage.

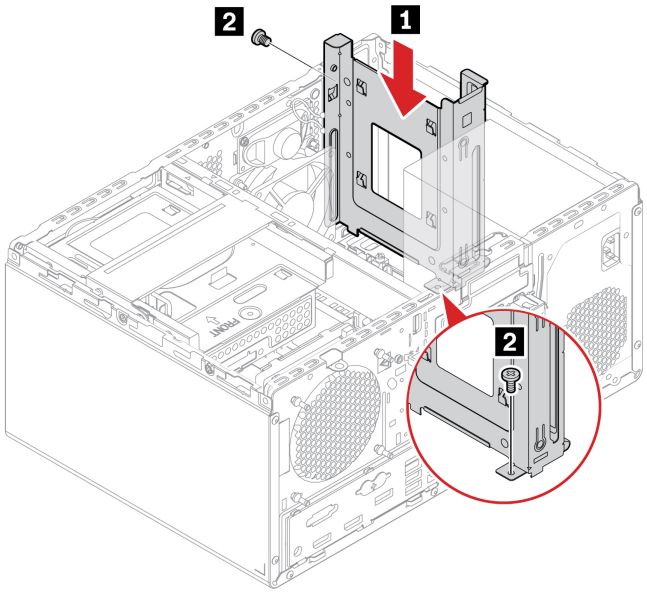

7. Reinstall all the removed parts. Then, reconnect the power cord and all disconnected cables to the computer.

M.2 solid-state drive and heat sink

Prerequisite

Before you start, read Appendix A “Important safety information” on page 71 and print the following instructions.

Attention:

- To replace the Optane memory in the M.2 solid-state drive slot, go to https://support.lenovo.com/docs/tg_ssd for details.
- The internal storage drive is sensitive. Inappropriate handling might cause damage and permanent loss of data. When handling the internal storage drive, observe the following guidelines:
  - Replace the internal storage drive only for upgrade or repair. The internal storage drive is not designed for frequent changes or replacement.
  - Before replacing the internal storage drive, make a backup copy of all the data that you want to keep.
  - Do not touch the contact edge of the internal storage drive. Otherwise, the internal storage drive might get damaged.
  - Do not apply pressure to the internal storage drive.
  - Do not make the internal storage drive subject to physical shocks or vibration. Put the internal storage drive on a soft material, such as cloth, to absorb physical shocks.

Replacement procedure

1. Remove the computer cover. See “Computer cover” on page 28.
2. Remove the 2.5-inch primary storage drive cage. See “Primary storage drives” on page 33.
3. Replace the M.2 solid-state drive and the heat sink depending on the computer model:
   - For computers without the heat sink for the M.2 solid-state drive, do the following:
     a. Pull out the stopper.

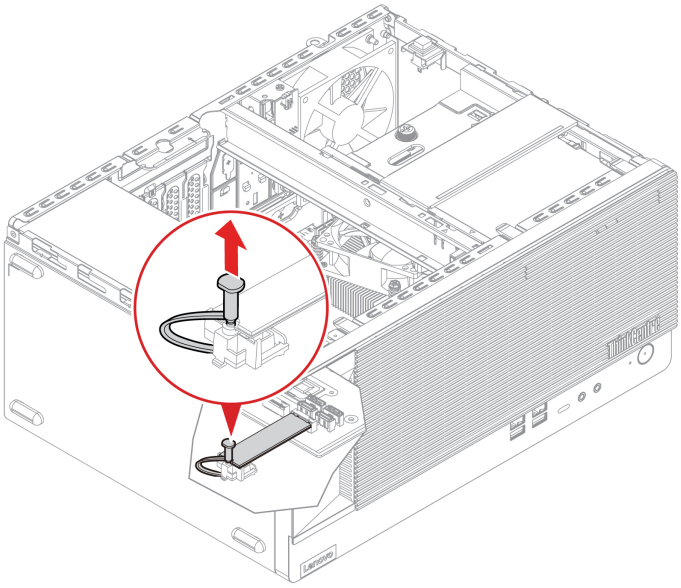

     b. Remove the M.2 solid-state drive.

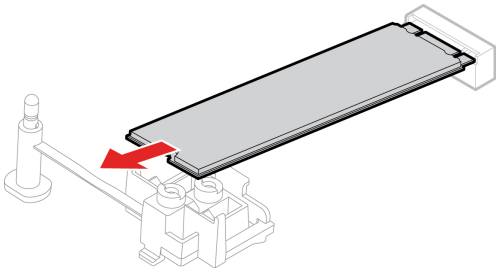

c. Install the M.2 solid-state drive.

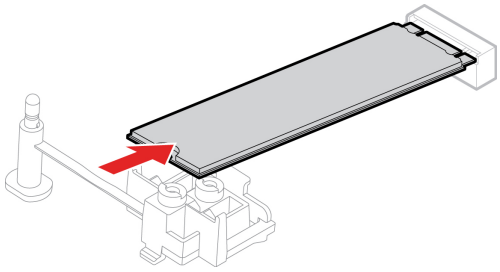

d. Insert the stopper.

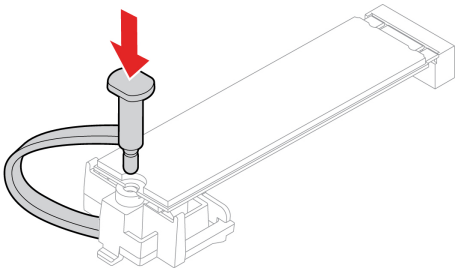

- For computers with the heat sink for the M.2 solid-state drive, do one of the following depending on the heat sink type:
  - Type 1
    a. Pull out the stopper.

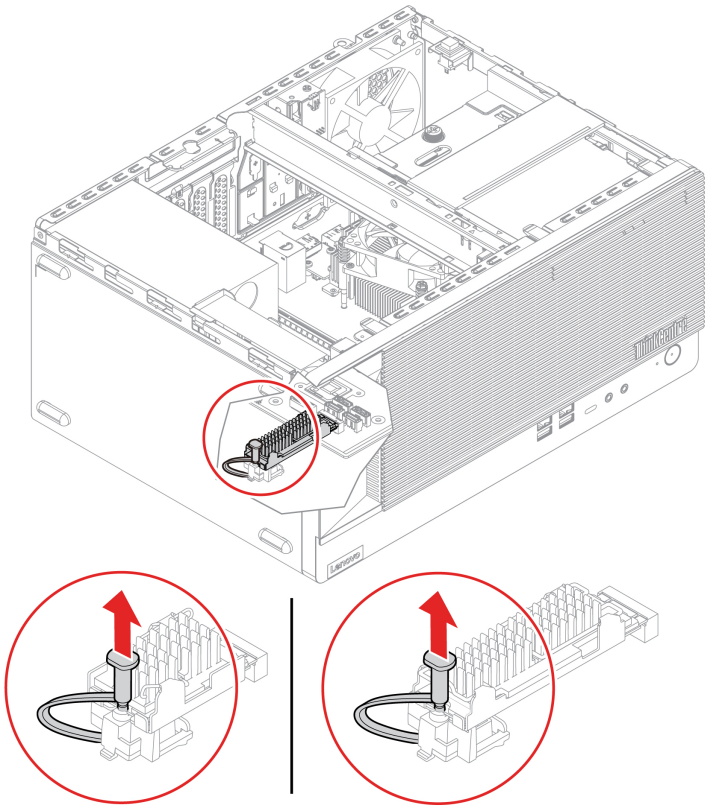

b. Remove the heat sink with the bracket.

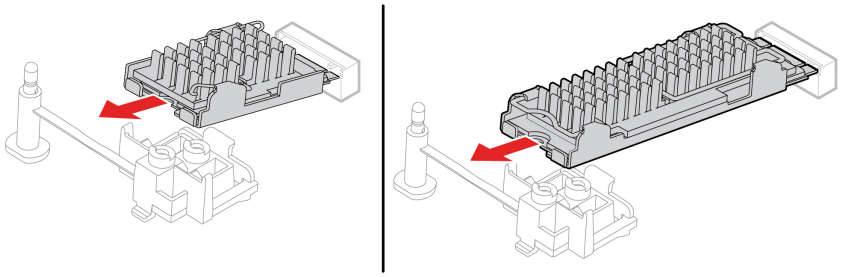

c. Remove the heat sink.

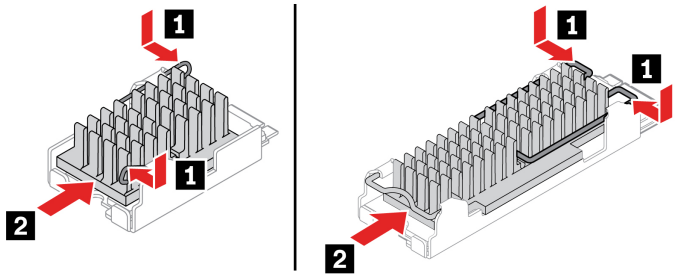

d. Remove the M.2 solid-state drive.

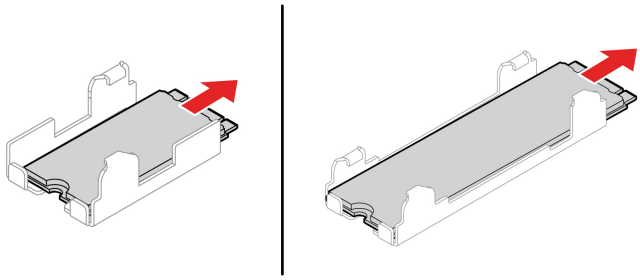

e. Remove the film that covers the thermal pad on the bracket, if any. Then, install the M.2 solid-state drive.

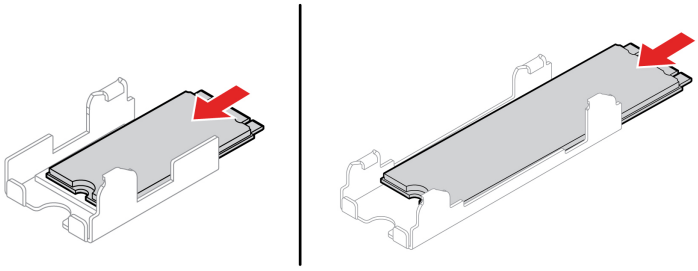

f. Remove the film that covers the thermal pad at the bottom of the heat sink, if any. Then, install the heat sink.

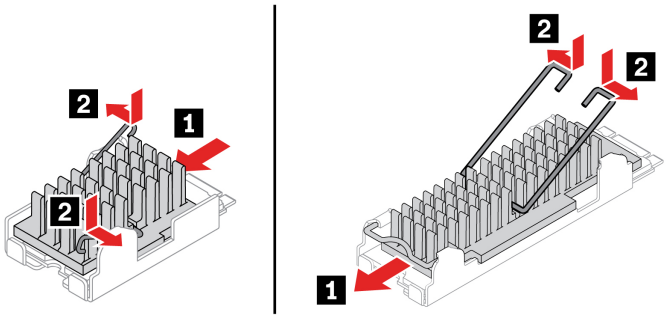

g. Install the heat sink with the bracket.

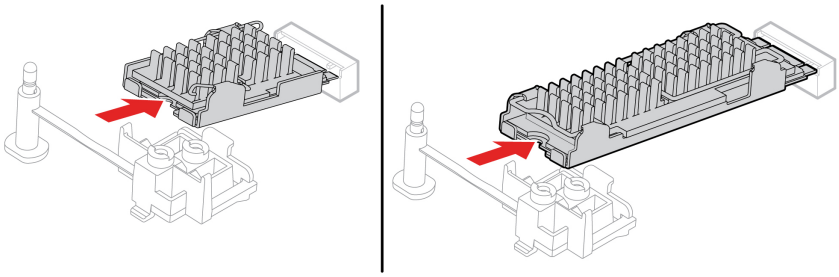

h. Insert the stopper.

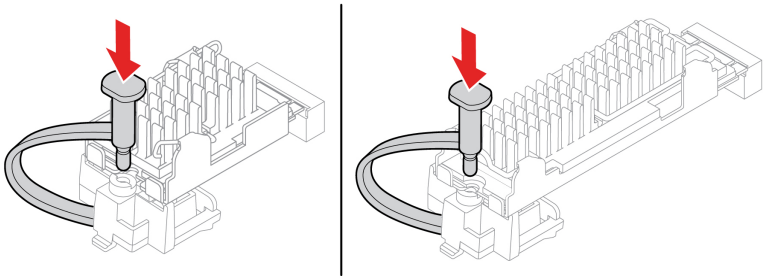

– Type 2

a. Pull out the stopper.

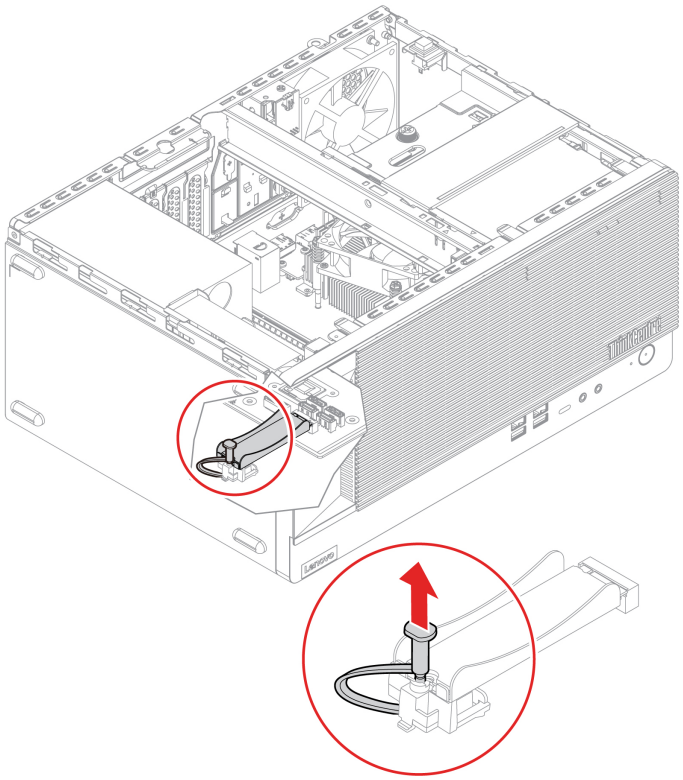

b. Remove the heat sink with the M.2 solid-state drive.

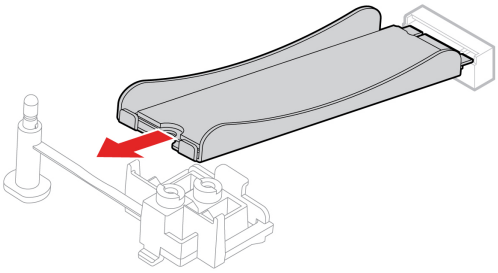

c. Remove the M.2 solid-state drive.

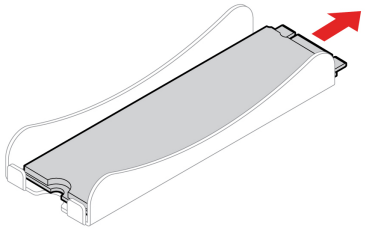

d. Remove the film that covers the thermal pad on the heat sink, if any. Then, install the M.2 solid-state drive.

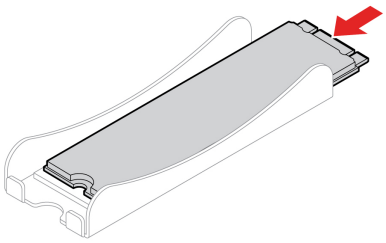

e. Install the heat sink with the M.2 solid-state drive.

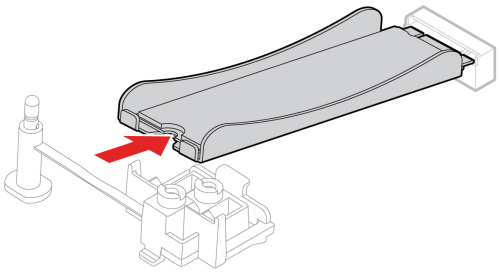

f. Insert the stopper.

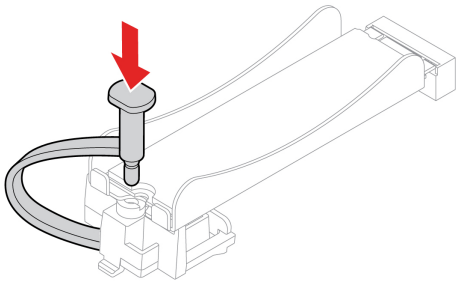

4. Reinstall all the removed parts. Then, reconnect the power cord and all disconnected cables to the computer.

M.2 solid-state drive bracket

Prerequisite

Before you start, read Appendix A “Important safety information” on page 71 and print the following instructions.

Replacement procedure

1. Remove the computer cover. See “Computer cover” on page 28.
2. Remove the 2.5-inch primary storage drive cage. See “Primary storage drives” on page 33.
3. Remove the M.2 solid-state drive and heat sink. See “M.2 solid-state drive and heat sink” on page 42.

4. Remove the M.2 solid-state drive bracket.

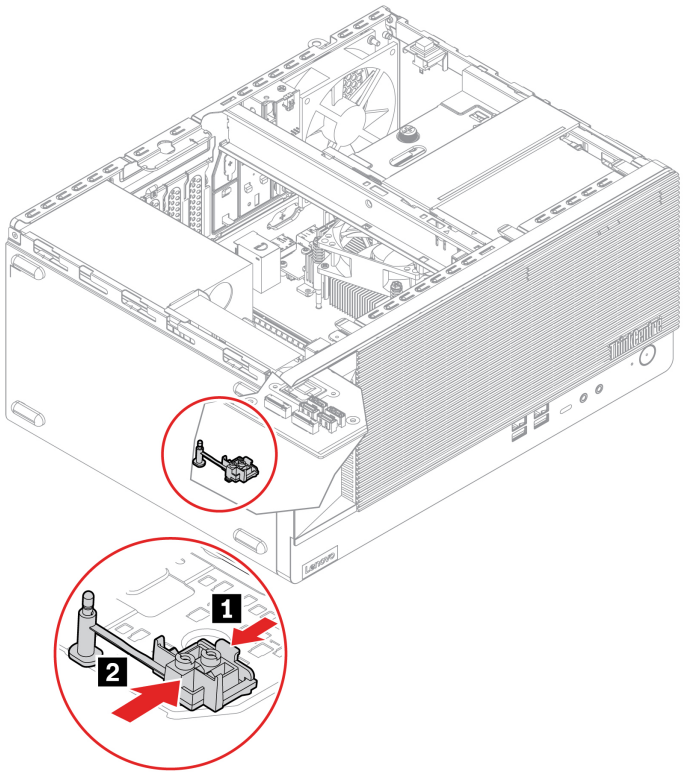

5. Install the M.2 solid-state drive bracket.

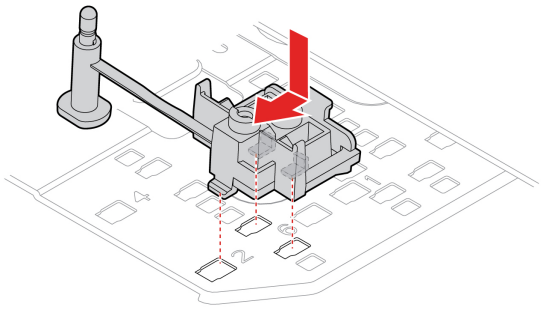

6. Reinstall all the removed parts. Then, reconnect the power cord and all disconnected cables to the computer.

Optical drive cage

Prerequisite

Before you start, read Appendix A “Important safety information” on page 71 and print the following instructions.

Replacement procedure

1. Remove the computer cover. See “Computer cover” on page 28.
2. Remove the optical drive. See “Optical drive” on page 29.
3. Remove the front bezel. See “Front bezel” on page 32.

4. Disconnect the signal cable and the power cable from the 3.5-inch secondary storage drive under the optical drive cage.
5. Remove the optical drive cage with the 3.5-inch secondary storage drive cage from the chassis.

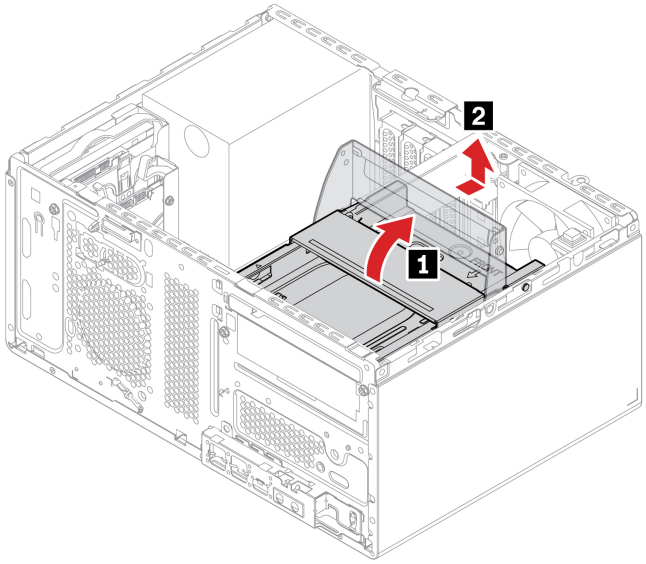

6. Remove the optical drive cage from the 3.5-inch secondary storage drive cage.

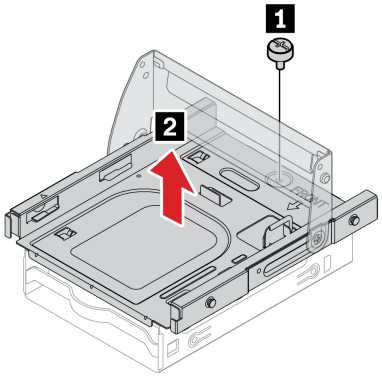

7. Install the optical drive cage to the 3.5-inch secondary storage drive cage.

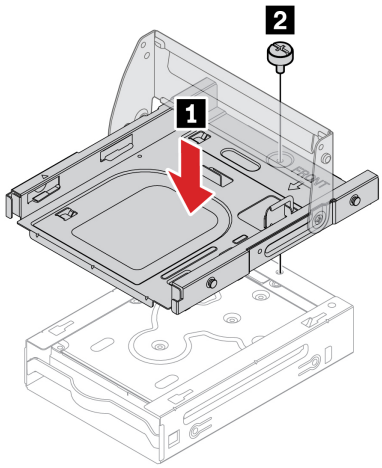

8. Install the optical drive cage to the chassis.

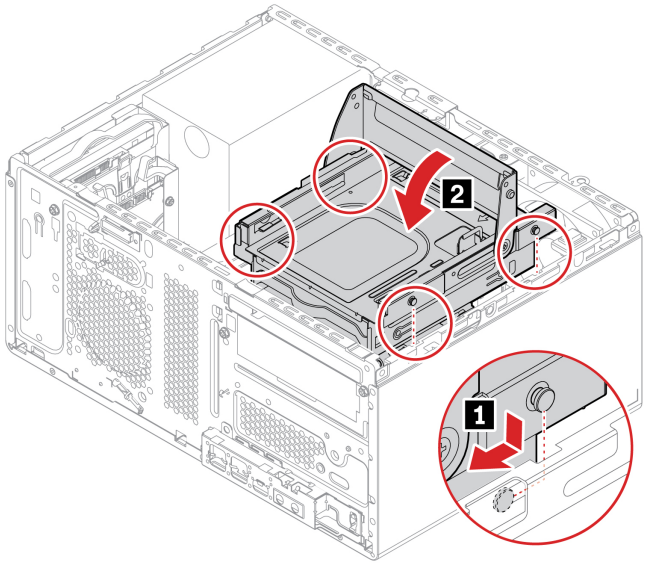

9. Connect the signal cable and the power cable to the 3.5-inch secondary storage drive.
10. Reinstall all the removed parts. Then, reconnect the power cord and all disconnected cables to the computer.

Secondary storage drive

Prerequisite

Before you start, read Appendix A “Important safety information” on page 71 and print the following instructions.

Attention: The internal storage drive is sensitive. Inappropriate handling might cause damage and permanent loss of data. When handling the internal storage drive, observe the following guidelines:

- Replace the internal storage drive only for upgrade or repair. The internal storage drive is not designed for frequent changes or replacement.

- Before replacing the internal storage drive, make a backup copy of all the data that you want to keep.
- Do not touch the contact edge of the internal storage drive. Otherwise, the internal storage drive might get damaged.
- Do not apply pressure to the internal storage drive.
- Do not make the internal storage drive subject to physical shocks or vibration. Put the internal storage drive on a soft material, such as cloth, to absorb physical shocks.

Replacement procedure

1. Remove the computer cover. See “Computer cover” on page 28.
2. Remove the optical drive. See “Optical drive” on page 29.
3. Remove the front bezel. See “Front bezel” on page 32.
4. Remove the optical drive cage. See “Optical drive cage” on page 49.
5. Remove the 3.5-inch secondary storage drive with the bracket from the 3.5-inch secondary storage drive cage.

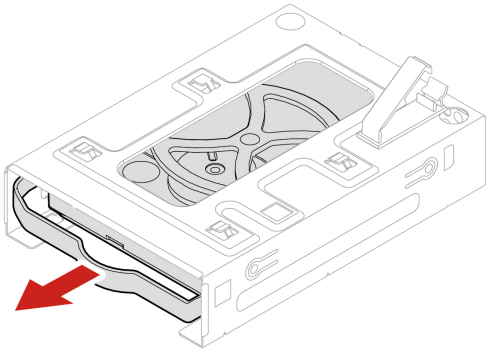

6. Remove the 3.5-inch secondary storage drive from the bracket.

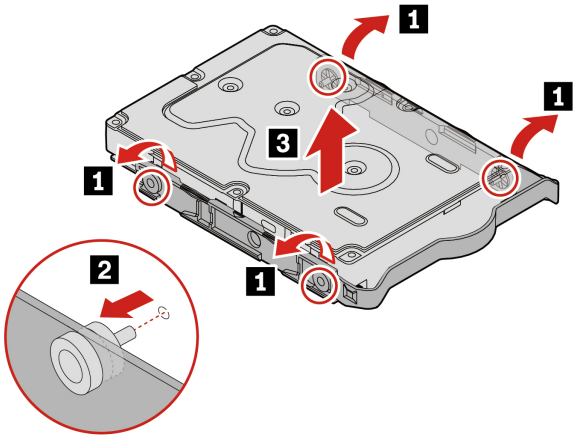

7. Install the 3.5-inch secondary storage drive to the bracket.

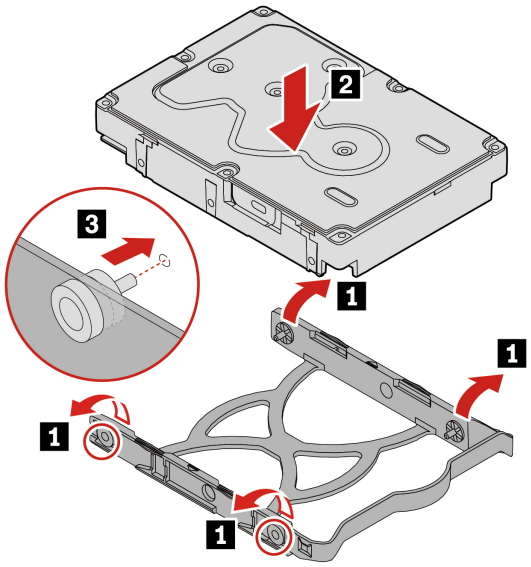

8. Install the 3.5-inch secondary storage drive with the bracket into the cage.

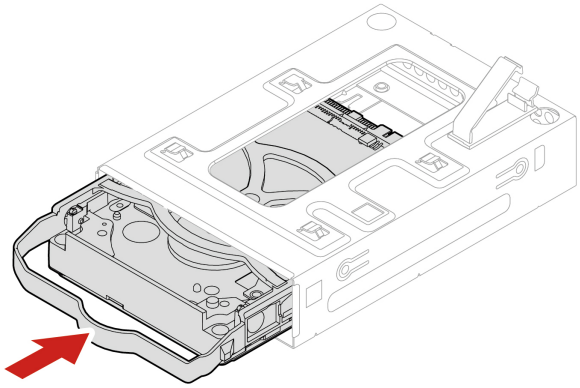

9. Reinstall all the removed parts. Then, reconnect the power cord and all disconnected cables to the computer.

PCI-Express card

Prerequisite

Before you start, read Appendix A “Important safety information” on page 71 and print the following instructions.

Replacement procedure

1. Remove the computer cover. See “Computer cover” on page 28.

2. Remove the PCI-Express card.

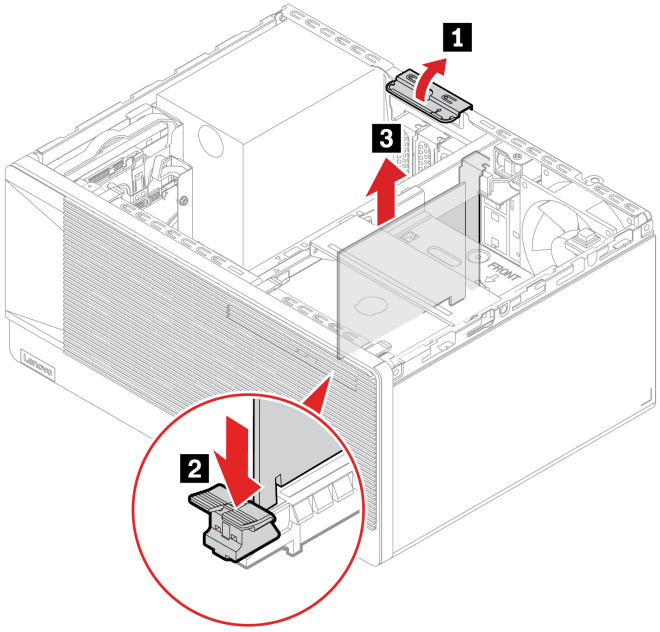

3. Install the PCI-Express card.

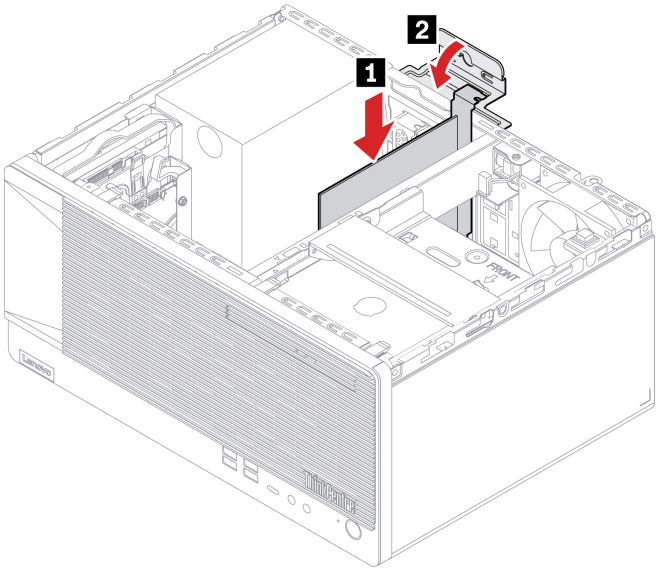

4. Reinstall all the removed parts. Then, reconnect the power cord and all disconnected cables to the computer.

PCI-Express connector cable

Prerequisite

Before you start, read Appendix A “Important safety information” on page 71 and print the following instructions.

Replacement procedure

1. Remove the computer cover. See “Computer cover” on page 28.
2. Disconnect the PCI-Express connector cable from the system board.
3. Remove the PCI-Express connector cable.

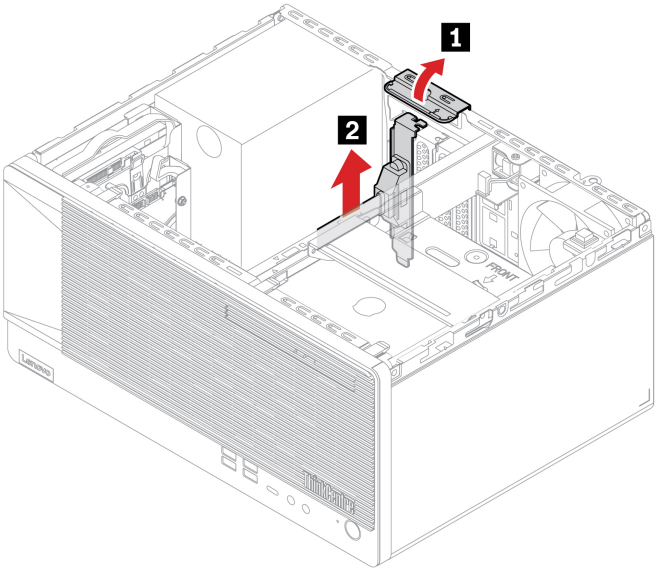

4. Install the PCI-Express connector cable.

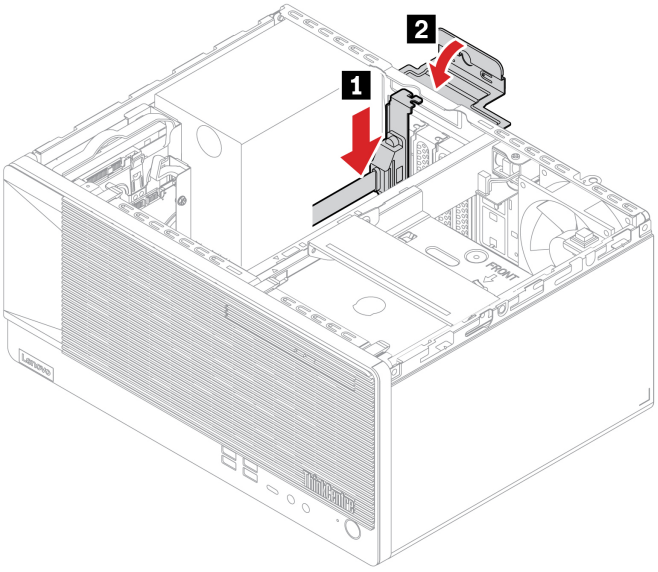

5. Connect the cable to the system board.
6. Reinstall all the removed parts. Then, reconnect the power cord and all disconnected cables to the computer.

Graphics card and plastic holder

Prerequisite

Before you start, read Appendix A “Important safety information” on page 71 and print the following instructions.

Replacement procedure

1. Remove the computer cover. See “Computer cover” on page 28.
2. Remove the plastic holder that secures the graphics card.

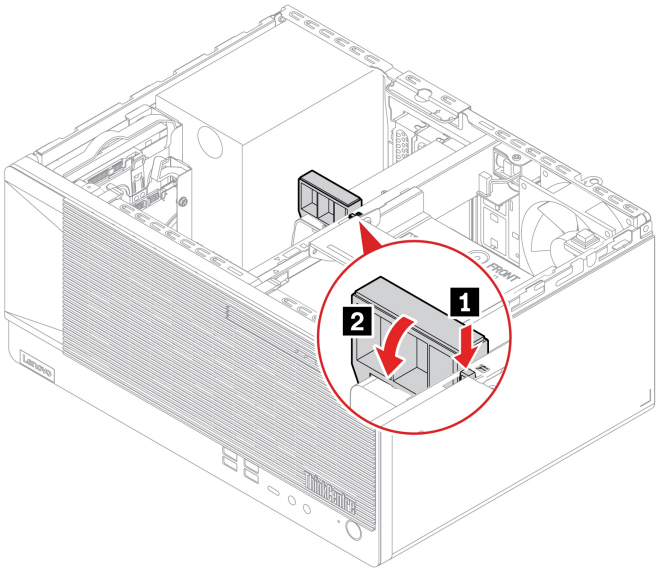

3. Remove the graphics card.

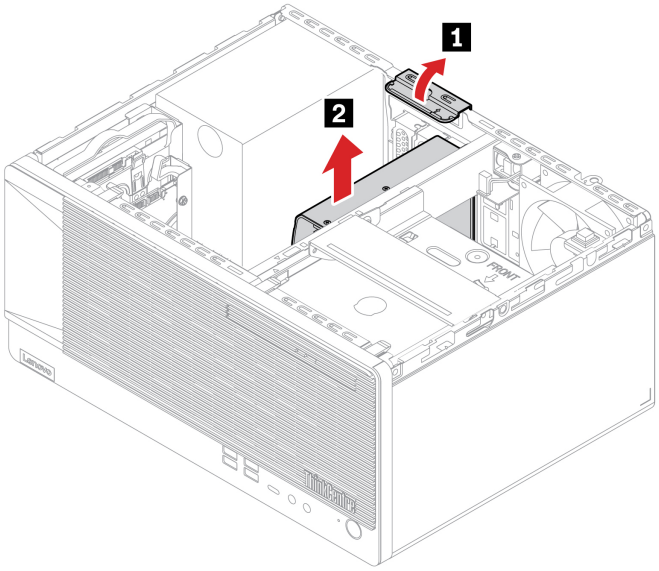

4. Install the graphics card.

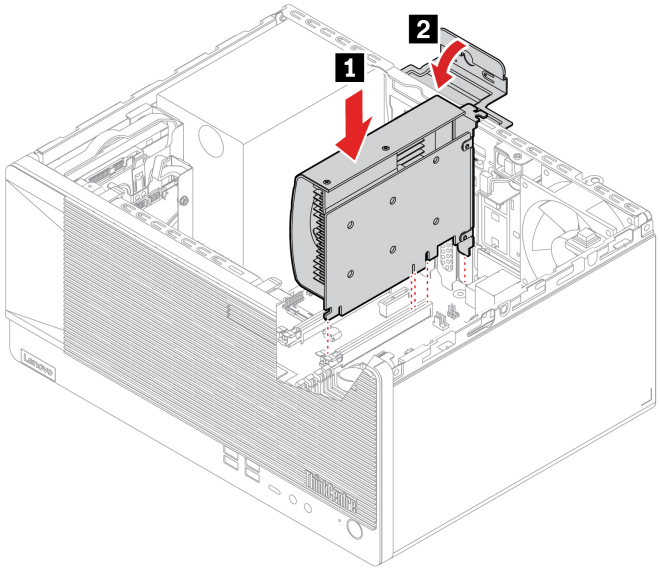

5. Install the plastic holder to secure the graphics card.

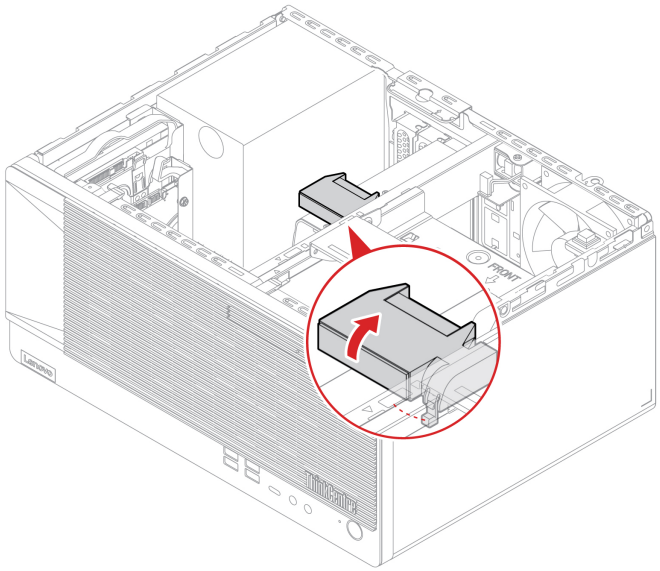

6. Reinstall all the removed parts. Then, reconnect the power cord and all disconnected cables to the computer.

Chassis beam

Prerequisite

Before you start, read Appendix A “Important safety information” on page 71 and print the following instructions.

Replacement procedure

1. Remove the computer cover. See “Computer cover” on page 28.

2. Remove the optical drive. See “Optical drive” on page 29.
3. Remove the front bezel. See “Front bezel” on page 32.
4. Remove the optical drive cage. See “Optical drive cage” on page 49.
5. Remove the plastic holder from the chassis beam. See “Graphics card and plastic holder” on page 56.
6. Pull the plastic latch toward the rear end of the chassis, and then push the chassis beam toward the top of the chassis.

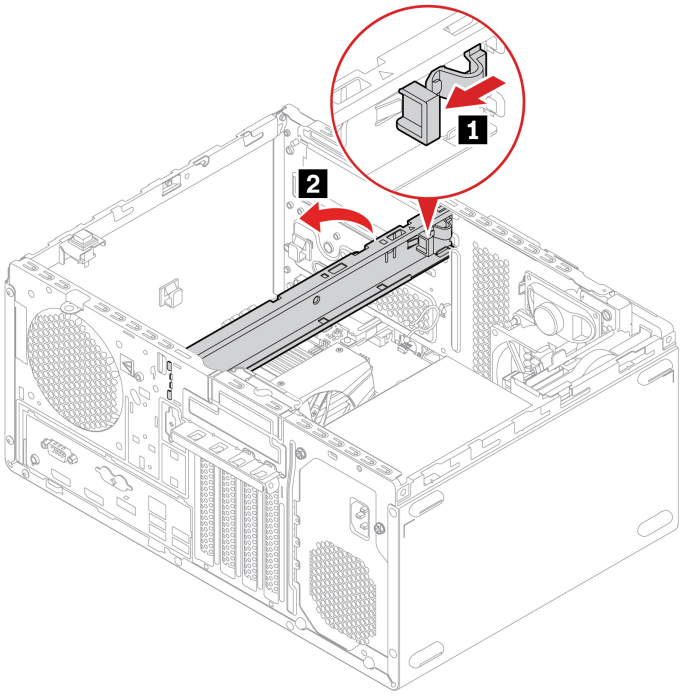

7. Remove the chassis beam from the chassis.

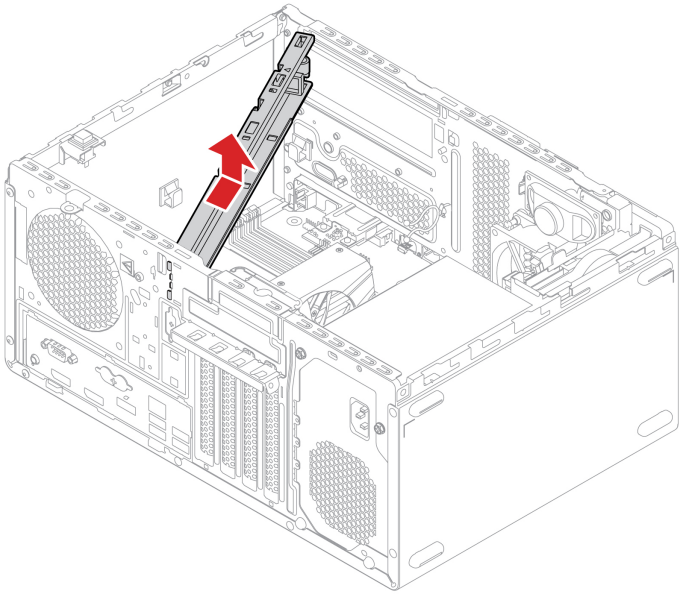

8. Install the chassis beam.

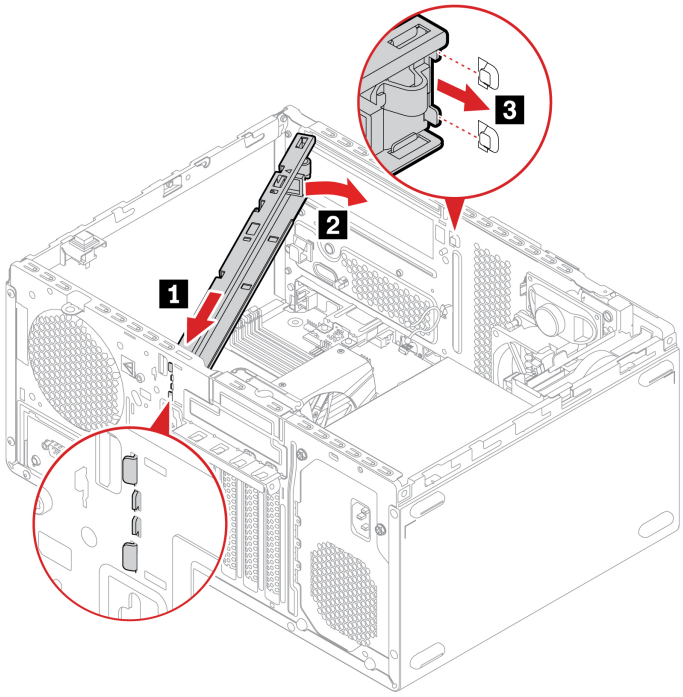

9. Reinstall all the removed parts. Then, reconnect the power cord and all disconnected cables to the computer.

Memory module

Prerequisite

Before you start, read Appendix A “Important safety information” on page 71 and print the following instructions.

Ensure that you follow the installation order for memory modules shown in the following illustration.

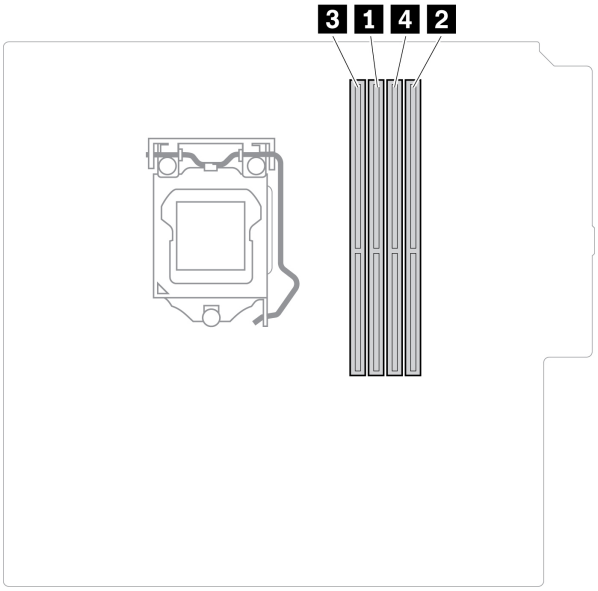

Replacement procedure

1. Remove the computer cover. See “Computer cover” on page 28.
2. Remove the optical drive. See “Optical drive” on page 29.
3. Remove the front bezel. See “Front bezel” on page 32.
4. Remove the optical drive cage. See “Optical drive cage” on page 49.
5. Remove the plastic holder from the chassis beam. See “Graphics card and plastic holder” on page 56.
6. Remove the chassis beam. See “Chassis beam” on page 57.
7. Remove the memory module.

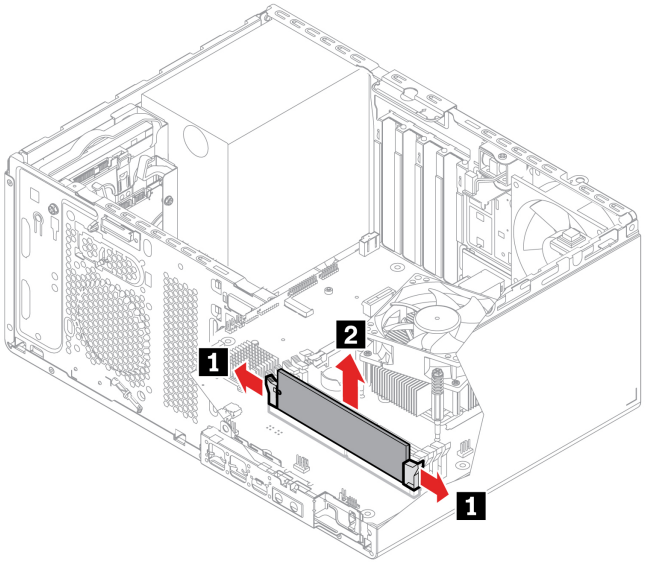

8. Install the memory module.

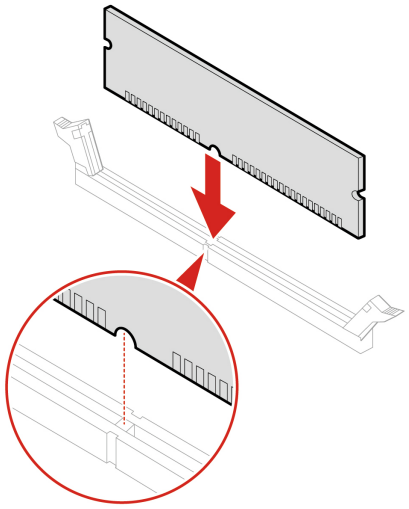

Note: During the installation, ensure that you align the memory module to the slot and press down on both ends until the latches are fully engaged with a click.

9. Reinstall all the removed parts. Then, reconnect the power cord and all disconnected cables to the computer.

Coin-cell battery

Prerequisite

Before you start, read Appendix A “Important safety information” on page 71 and print the following instructions.

Your computer has a special type of memory that maintains the date, time, and settings for built-in features, such as parallel connector assignments (configurations). A coin-cell battery keeps this information active when you turn off the computer.

The coin-cell battery normally requires no charging or maintenance throughout its life; however, no coin-cell battery lasts forever. If the coin-cell battery fails, the date and time information is lost. An error message is displayed when you turn on the computer.

Replacement procedure

1. Remove the computer cover. See “Computer cover” on page 28.
2. Remove the optical drive. See “Optical drive” on page 29.
3. Remove the front bezel. See “Front bezel” on page 32.
4. Remove the optical drive cage. See “Optical drive cage” on page 49.
5. Remove the plastic holder from the chassis beam. See “Graphics card and plastic holder” on page 56.
6. Remove the chassis beam. See “Chassis beam” on page 57.

7. Remove the coin-cell battery.

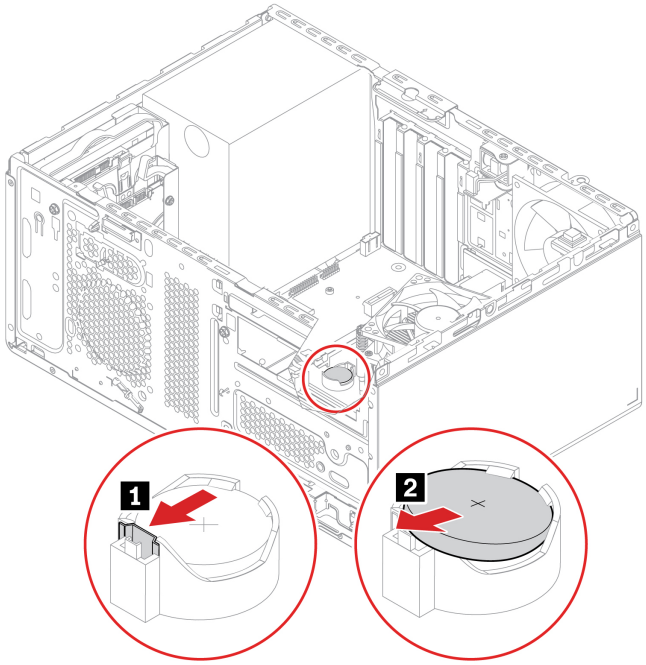

8. Install the coin-cell battery.

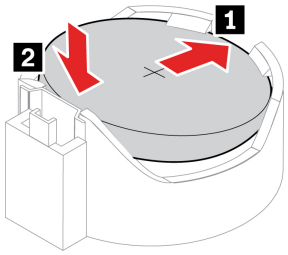

9. Reinstall all removed parts. Then, reconnect all disconnected cables to the computer and reconnect the power cord to the electrical outlet.
10. Reset the system date and time in the UEFI BIOS menu.

To dispose of the coin-cell battery, refer to the “Lithium coin-cell battery notice” in the *Safety and Warranty Guide*.

Power supply assembly

Prerequisite

Before you start, read Appendix A “Important safety information” on page 71 and print the following instructions.



Before you open the computer cover, turn off the computer and wait several minutes until the computer is cool.

Although there are no moving parts in the computer after the power cord has been disconnected, the following warnings are required for your safety.



Keep fingers and other parts of your body away from hazardous, moving parts. If you suffer an injury, seek medical care immediately. Never remove the cover on a power supply or any part that has the following label attached.



Hazardous voltage, current, and energy levels are present inside any component that has this label attached. There are no serviceable parts inside these components. If you suspect a problem with one of these parts, contact a service technician.

Replacement procedure

1. Remove the computer cover. See “Computer cover” on page 28.
2. Remove the optical drive. See “Optical drive” on page 29.
3. Remove the front bezel. See “Front bezel” on page 32.
4. Remove the primary storage drives. See “Primary storage drives” on page 33.
5. Remove the 3.5-inch primary storage drive cage. See “3.5-inch primary storage drive cage” on page 41.
6. Disconnect the power supply assembly cables from the system board.
7. Remove the power supply assembly.

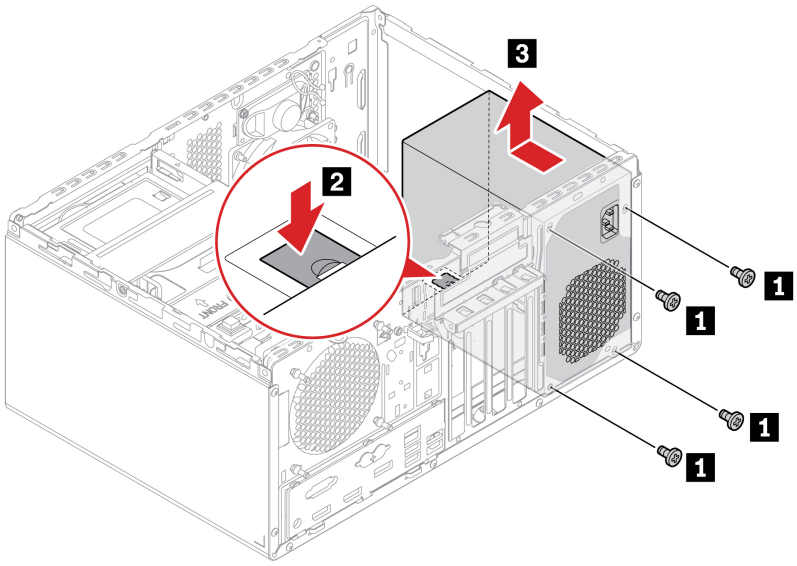

8. Install the power supply assembly.

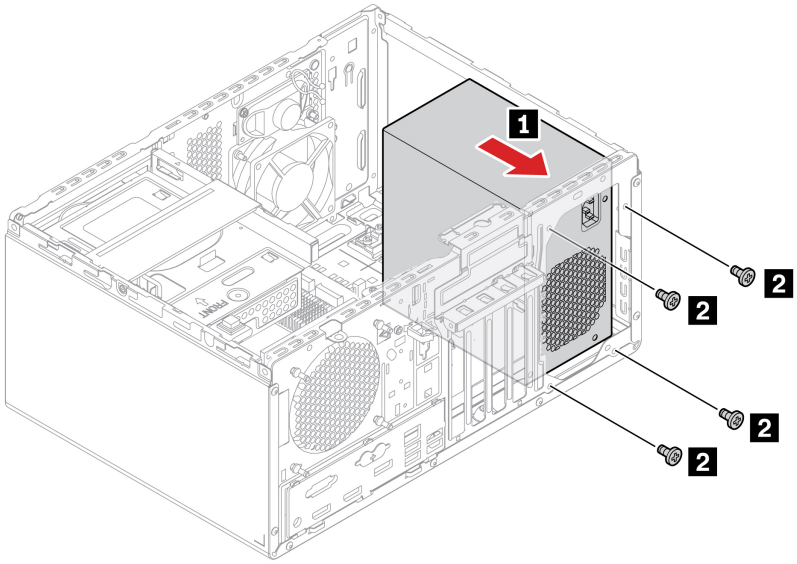

9. Connect the power supply assembly cables to the system board.
10. Reinstall all the removed parts. Then, reconnect the power cord and all disconnected cables to the computer.

E-lock

Prerequisite

Before you start, read Appendix A “Important safety information” on page 71 and print the following instructions.

Replacement procedure

1. Remove the computer cover. See “Computer cover” on page 28.
2. Disconnect the E-lock cable from the system board.

3. Remove the E-lock.

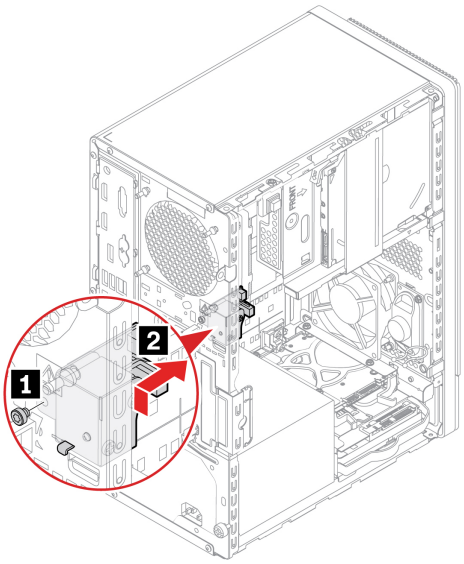

4. Install the E-lock.

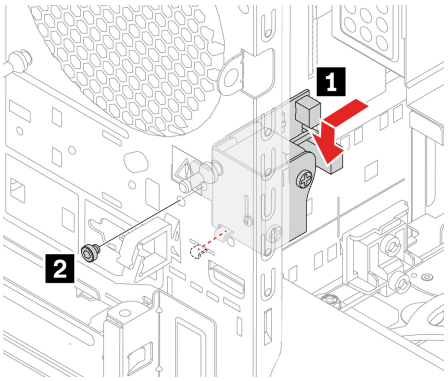

5. Connect the E-lock cable to the system board.
6. Reinstall all the removed parts. Then, reconnect the power cord and all disconnected cables to the computer.

Chapter 8. Help and support

Self-help resources

Use the following self-help resources to learn more about the computer and troubleshoot problems.

Resources	How to access?
Troubleshooting and frequently asked questions	• https://www.lenovo.com/tips • https://forums.lenovo.com
Accessibility information	https://www.lenovo.com/accessibility
Reset or restore Windows	• Use Lenovo recovery options. 1. Go to https://support.lenovo.com/HowToCreateLenovoRecovery. 2. Follow the on-screen instructions. • Use Windows recovery options. 1. Go to https://pcsupport.lenovo.com. 2. Detect your computer or manually select your computer model. 3. Navigate to the troubleshooting menu to diagnose the operating system for recovery instructions.
Use the Vantage app to: • Configure device settings. • Download and install UEFI BIOS, drivers and firmware updates. • Secure you computer from outside threats. • Diagnose hardware problems. • Check the computer warranty status. • Access *User Guide* and helpful articles. **Note:** The available features vary depending on the computer model.	Type `Vantage` in the Windows search box.
Product documentation: • *Safety and Warranty Guide* • *Generic Safety and Compliance Notices* • *Setup Guide* • This *User Guide* • *Regulatory Notice*	Go to https://pcsupport.lenovo.com. Then, follow the on-screen instructions to filter out the documentation you want.

© Copyright Lenovo 2021, 2023

Resources	How to access?
Lenovo Support Web site with the latest support information of the following: • Drivers and software • Diagnostic solutions • Product and service warranty • Product and parts details • Knowledge base and frequently asked questions	https://pcsupport.lenovo.com
Windows help information	• Type **Get Help** or **Tips** in the Windows search box and then press Enter. • Use Windows Search or the Cortana® personal assistant. • Microsoft support Web site: https://support.microsoft.com

Call Lenovo

If you have tried to correct the problem yourself and still need help, you can call Lenovo Customer Support Center.

Before you contact Lenovo

Prepare the following before you contact Lenovo:

1. Record the problem symptoms and details:
   - What is the problem? Is it continuous or intermittent?
   - Any error message or error code?
   - What operating system are you using? Which version?
   - Which software applications were running at the time of the problem?
   - Can the problem be reproduced? If so, how?
2. Record the system information:
   - Product name
   - Machine type and serial number

The following illustration shows where to find the machine type and serial number of your computer.

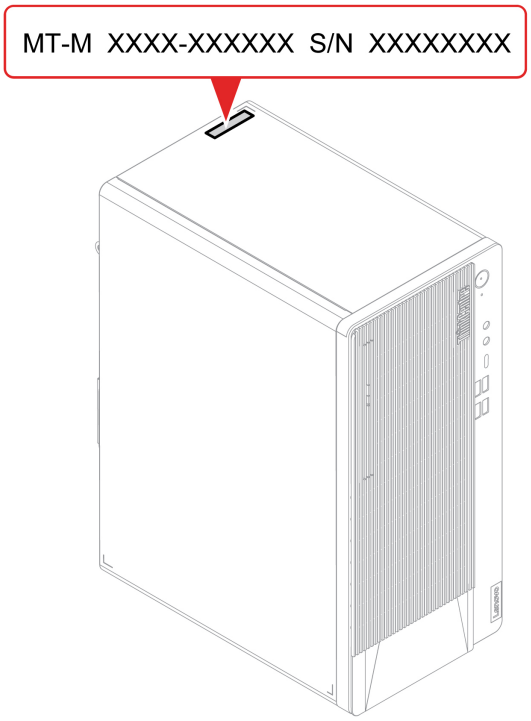

Lenovo Customer Support Center

During the warranty period, you can call Lenovo Customer Support Center for help.

Telephone numbers

For a list of the Lenovo Support phone numbers for your country or region, go to:
https://pcsupport.lenovo.com/supportphonelist

Note: Phone numbers are subject to change without notice. If the number for your country or region is not provided, contact your Lenovo reseller or Lenovo marketing representative.

Services available during the warranty period

- Problem determination - Trained personnel are available to assist you with determining if you have a hardware problem and deciding what action is necessary to fix the problem.
- Lenovo hardware repair - If the problem is determined to be caused by Lenovo hardware under warranty, trained service personnel are available to provide the applicable level of service.
- Engineering change management - Occasionally, there might be changes that are required after a product has been sold. Lenovo or your reseller, if authorized by Lenovo, will make selected Engineering Changes (ECs) that apply to your hardware available.

Services not covered

- Replacement or use of parts not manufactured for or by Lenovo or nonwarranted parts
- Identification of software problem sources
- Configuration of UEFI BIOS as part of an installation or upgrade
- Changes, modifications, or upgrades to device drivers
- Installation and maintenance of network operating systems (NOS)
- Installation and maintenance of programs

For the terms and conditions of the Lenovo Limited Warranty that apply to your Lenovo hardware product, see *Safety and Warranty Guide* that comes with your computer.

Purchase additional services

During and after the warranty period, you can purchase additional services from Lenovo at: https://pcsupport.lenovo.com/warrantyupgrade

Service availability and service name might vary by country or region.

Appendix A. Important safety information

Safety notices

This information can help you safely use your computer. Follow and retain all information included with your computer. The information in this document does not alter the terms of your purchase agreement or the Limited Warranty. For more information, go to:

- https://www.lenovo.com/warranty/llw_02
- https://support.lenovo.com/warrantylookup

Customer safety is important. Our products are developed to be safe and effective. However, personal computers are electronic devices. Power cords, power adapters, and other features can create potential safety risks that can result in physical injury or property damage, especially if misused. To reduce these risks, follow the instructions included with your product, observe all warnings on the product and in the operating instructions, and review the information included in this document carefully. By carefully following the information contained in this document and provided with your product, you can help protect yourself from hazards and create a safer computer work environment. If the computer is used in a manner not specified by the manufacturer, the protection provided by the computer may be impaired.

Note: This information includes references to power adapters and batteries. In addition, some products (such as speakers and monitors) ship with external power adapters. If you have such a product, this information applies to your product. In addition, computer products contain a coin-sized internal battery that provides power to the system clock even when the computer is unplugged, so the battery safety information applies to all computer products.

Conditions that require immediate action

Products can become damaged due to misuse or neglect. Some product damage is serious enough that the product should not be used again until it has been inspected and, if necessary, repaired by an authorized servicer.

As with any electronic device, pay close attention to the product when it is turned on.

On very rare occasions, you might notice an odor or see a puff of smoke or sparks vent from your product. You might also hear sounds like popping, cracking, or hissing. These might merely mean that an internal electronic component has failed in a safe and controlled manner. Or, they might indicate a potential safety issue. Do not take risks or attempt to diagnose the situation yourself. Contact the Customer Support Center for further guidance. For a list of Service and Support phone numbers, see the following Web site:

https://pcsupport.lenovo.com/supportphonelist

Frequently inspect your computer and its components for damage, wear, or signs of danger. If you have any question about the condition of a component, do not use the product. Contact the Customer Support Center or the product manufacturer for instructions on how to inspect the product and have it repaired, if necessary.

In the unlikely event that you notice any of the following conditions, or if you have any safety concerns with your product, stop using the product and unplug it from the power source and telecommunication lines until you can speak to the Customer Support Center for further guidance.

© Copyright Lenovo 2021, 2023

- Power cords, plugs, power adapters, extension cords, surge protectors, or power supplies that are cracked, broken, or damaged.
- Signs of overheating, smoke, sparks, or fire.
- Damage to a battery (such as cracks, dents, or creases), discharge from a battery, or a buildup of foreign substances on the battery.
- A cracking, hissing, or popping sound, or strong odor that comes from the product.
- Signs that liquid has been spilled or an object has fallen onto the computer product, the power cord, or power adapter.
- The computer product, power cord, or power adapter has been exposed to water.
- The product has been dropped or damaged in any way.
- The product does not operate normally when you follow the operating instructions.

Note: If you notice these conditions with a product (such as an extension cord) that is not manufactured for or by Lenovo, stop using that product until you can contact the product manufacturer for further instructions, or until you get a suitable replacement.

Service and upgrades

Do not attempt to service a product yourself unless instructed to do so by the Customer Support Center or your documentation. Only use a Service Provider who is approved to repair your particular product.

Note: Some computer parts can be upgraded or replaced by the customer. Upgrades typically are referred to as options. Replacement parts approved for customer installation are referred to as Customer Replaceable Units, or CRUs. Lenovo provides documentation with instructions when it is appropriate for customers to install options or replace CRUs. You must closely follow all instructions when installing or replacing parts. The Off state of a power indicator does not necessarily mean that voltage levels inside a product are zero. Before you remove the covers from a product equipped with a power cord, always ensure that the power is turned off and that the product is unplugged from any power source. If you have any questions or concerns, contact the Customer Support Center.

Although there are no moving parts in the computer after the power cord has been disconnected, the following warnings are required for your safety.



Moving Parts:

Keep fingers and other parts of your body away from hazardous, moving parts. If you suffer an injury, seek medical care immediately.



Hot Surface:

Avoid contact with hot components inside the computer. During operation, some components become hot enough to burn the skin. Before you open the computer cover, turn off the computer, disconnect power, and wait approximately 10 minutes for the components to cool.



After replacing a CRU, reinstall all protective covers, including the computer cover, before connecting power and operating the computer. This action is important to help prevent unexpected electrical shock and help ensure the containment of an unexpected fire that could happen under extremely rare conditions.



Sharp Edges:

When replacing CRUs, be cautious of sharp edges or corners that might cause injury. If you suffer an injury, seek medical care immediately.

Power cords and power adapters

**DANGER**

Use only the power cords and power adapters supplied by the product manufacturer.

The power cords shall be safety approved. For Germany, it shall be H03VV-F, 3G, 0.75 mm^2, or better. For other countries, the suitable types shall be used accordingly.

Never wrap a power cord around a power adapter or other object. Doing so can stress the cord in ways that can cause the cord to fray, crack, or crimp. This can present a safety hazard.

Always route power cords so that they will not be walked on, tripped over, or pinched by objects.

Protect power cords and power adapters from liquids. For instance, do not leave your power cord or power adapter near sinks, tubs, toilets, or on floors that are cleaned with liquid cleansers. Liquids can cause a short circuit, particularly if the power cord or power adapter has been stressed by misuse. Liquids also can cause gradual corrosion of power cord terminals and/or the connector terminals on a power adapter, which can eventually result in overheating.

Ensure that all power cord connectors are securely and completely plugged into receptacles.

Do not use any power adapter that shows corrosion at the ac input pins or shows signs of overheating (such as deformed plastic) at the ac input pins or anywhere on the power adapter.

Do not use any power cords where the electrical contacts on either end show signs of corrosion or overheating or where the power cord appears to have been damaged in any way.

To prevent possible overheating, do not cover the power adapter with clothing or other objects when the power adapter is plugged into an electrical outlet.

Power cord notice

Note: The power cord and adapter provided with this product are intended to be used with this product only. Do not use them with any other products.

For your safety, Lenovo provides a power cord with a grounded attachment plug to use with this product. To avoid electrical shock, always use the power cord and plug with a properly grounded outlet.

Power cords provided by Lenovo in the United States and Canada are listed by Underwriter's Laboratories (UL) and certified by the Canadian Standards Association (CSA).

For units intended to be operated at 115 volts: Use a UL-listed and CSA-certified cord set consisting of a minimum 18 AWG, Type SVT or SJT, three-conductor cord, a maximum of 15 feet in length and a parallel blade, grounding-type attachment plug rated 10 amperes, 125 volts.

For units intended to be operated at 230 volts (U.S. use): Use a UL-listed and CSA-certified cord set consisting of a minimum 18 AWG, Type SVT or SJT, three-conductor cord, a maximum of 15 feet in length and a tandem blade, grounding-type attachment plug rated 10 amperes, 250 volts.

For units intended to be operated at 230 volts (outside the U.S.): Use a cord set with a grounding-type attachment plug. The cord set should have the appropriate safety approvals for the country in which the equipment will be installed.

Power cords provided by Lenovo for a specific country or region are usually available only in that country or region.

For units intended to be operated in Germany: The power cords must be safety approved. For Germany, it must be H05VV-F, 3G, 0.75 mm2, or better. For other countries, the suitable types must be used accordingly.

For units intended to be operated in Denmark: Use a cord set with a grounding-type attachment plug. The cord set should have the appropriate safety approvals for the country in which the equipment will be installed.

For units intended to be operated in Norway, Sweden, Finland: Use a cord set with a two-prong attachment plug. The cord set should have the appropriate safety approvals for the country in which the equipment will be installed.

If you intend to use your PC in a country or region that is different from your ordering location, please purchase an additional Lenovo power cord for the country or region where the PC will be used. Refer to the power cord guide provided in our Web site, https://pcsupport.lenovo.com, for details. Some countries and regions support multiple voltages, so make sure you order the appropriate power cord for the intended voltage.

Extension cords and related devices

Ensure that extension cords, surge protectors, uninterruptible power supplies, and power strips that you use are rated to handle the electrical requirements of the product. Never overload these devices. If power strips are used, the load should not exceed the power strip input rating. Consult an electrician for more information if you have questions about power loads, power requirements, and input ratings.

Plugs and outlets

DANGER

If a receptacle (power outlet) that you intend to use with your computer equipment appears to be damaged or corroded, do not use the outlet until it is replaced by a qualified electrician.

Do not bend or modify the plug. If the plug is damaged, contact the manufacturer to obtain a replacement.

Do not share an electrical outlet with other home or commercial appliances that draw large amounts of electricity; otherwise, unstable voltage might damage your computer, data, or attached devices.

Some products are equipped with a three-pronged plug. This plug fits only into a grounded electrical outlet. This is a safety feature. Do not defeat this safety feature by trying to insert it into a non-grounded outlet. If you cannot insert the plug into the outlet, contact an electrician for an approved outlet adapter or to replace the outlet with one that enables this safety feature. Never overload an electrical outlet. The overall system load should not exceed 80 percent of the branch circuit rating. Consult an electrician for more information if you have questions about power loads and branch circuit ratings.

Be sure that the power outlet you are using is properly wired, easily accessible, and located close to the equipment. Do not fully extend power cords in a way that will stress the cords.

Be sure that the power outlet provides the correct voltage and current for the product you are installing.

Carefully connect and disconnect the equipment from the electrical outlet.

Power supply statement

Never remove the cover on a power supply or any part that has the following label attached.



Hazardous voltage, current, and energy levels are present inside any component that has this label attached. There are no serviceable parts inside these components. If you suspect a problem with one of these parts, contact a service technician.

External devices

CAUTION:
Do not connect or disconnect any external device cables other than Universal Serial Bus (USB) and 1394 cables while the computer power is on; otherwise, you might damage your computer. To avoid possible damage to attached devices, wait at least five seconds after the computer is shut down to disconnect external devices.

Lithium coin-cell battery notice

DANGER

Danger of explosion if battery is incorrectly replaced.

If the coin-cell battery is not a CRU, do not attempt to replace the coin-cell battery. Replacement of the battery must be done by a Lenovo-authorized repair facility or technician.

The Lenovo-authorized repair facilities or technicians recycle Lenovo batteries according to local laws and regulations.

When replacing the lithium coin-cell battery, use only the same type or equivalent type that is recommended by the manufacturer. The battery contains lithium and can explode if not properly used, handled, or disposed of. Swallowing the lithium coin-cell battery will cause chocking or severe internal burns in just two hours and might even result in death.

Keep batteries away from children. If the lithium coin-cell battery is swallowed or placed inside any part of the body, seek medical care immediately.

Do not:

- Throw or immerse into water
- Heat to more than 100 °C (212°F)
- Repair or disassemble
- Leave in an extremely low air pressure environment
- Leave in an extremely high-temperature environment
- Crush, puncture, cut, or incinerate

Dispose of the battery as required by local ordinances or regulations.

The following statement applies to users in the state of California, U.S.A.

California Perchlorate Information:

Products containing manganese dioxide lithium coin-cell batteries may contain perchlorate.

Perchlorate Material - special handling may apply, see https://www.dtsc.ca.gov/hazardouswaste/perchlorate/.

Heat and product ventilation

Computers, power adapters, and many accessories can generate heat when turned on and when batteries are charging. Always follow these basic precautions:

- Do not leave your computer, power adapter, or accessories in contact with your lap or any part of your body for an extended period when the products are functioning or when the battery is charging. Your

computer, power adapter, and many accessories produce some heat during normal operation. Extended contact with the body could cause discomfort or, potentially, a skin burn.

- Do not charge the battery or operate your computer, power adapter, or accessories near flammable materials or in explosive environments.
- Ventilation slots, fans, and heat sinks are provided with the product for safety, comfort, and reliable operation. These features might inadvertently become blocked by placing the product on a bed, sofa, carpet, or other flexible surface. Never block, cover, or disable these features.

Inspect your desktop computer for dust accumulation at least once every three months. Before inspecting your computer, turn off the power and unplug the computer's power cord from the electrical outlet; then remove any dust from vents and perforations in the bezel. If you notice external dust accumulation, then examine and remove dust from the inside of the computer including heat sink inlet fins, power supply vents, and fans. Always turn off and unplug the computer before opening the cover. If possible, avoid operating your computer within two feet of high-traffic areas. If you must operate your computer in or near a high-traffic area, inspect and, if necessary, clean your computer more frequently.

For your safety and to maintain optimum computer performance, always follow these basic precautions with your desktop computer:

- Keep the cover closed whenever the computer is plugged in.
- Regularly inspect the outside of the computer for dust accumulation.
- Remove dust from vents and any perforations in the bezel. More frequent cleanings might be required for computers in dusty or high-traffic areas.
- Do not restrict or block any ventilation openings.
- Do not store or operate your computer inside furniture, as this might increase the risk of overheating.
- Airflow temperatures into the computer should not exceed 35°C (95°F).
- Do not install air filtration devices. They may interfere with proper cooling.

Electrical current safety information



DANGER

Electric current from power, telephone, and communication cables is hazardous.

To avoid a shock hazard:

- **Do not use your computer during a lightning storm.**
- **Do not connect or disconnect any cables or perform installation, maintenance, or reconfiguration of this product during an electrical storm.**
- **Connect all power cords to a properly wired and grounded electrical outlet.**
- **Connect properly wired outlets to any equipment that will be attached to this product.**
- **Whenever possible, use one hand only to connect or disconnect signal cables.**
- **Never turn on any equipment when there is evidence of fire, water, or structural damage.**
- **Disconnect the attached power cords, battery, and all the cables before you open the device covers, unless instructed otherwise in the installation and configuration procedures.**
- **Do not use your computer until all internal parts enclosures are fastened into place. Never use the computer when internal parts and circuits are exposed.**

DANGER

Connect and disconnect cables as described in the following procedures when installing, moving, or opening covers on this product or attached devices.

To connect:

1. **Turn everything OFF.**
2. **First, attach all cables to devices.**
3. **Attach signal cables to connectors.**
4. **Attach power cords to outlets.**
5. **Turn devices ON.**

To disconnect:

1. **Turn everything OFF.**
2. **First, remove power cords from outlets.**
3. **Remove signal cables from connectors.**
4. **Remove all cables from devices.**

The power cord must be disconnected from the wall outlet or receptacle before installing all other electrical cables connected to the computer.

The power cord may be reconnected to the wall outlet or receptacle only after all other electrical cables have been connected to the computer.

DANGER

During electrical storms, do not perform any replacement and do not connect the telephone cable to or disconnect it from the telephone outlet on the wall.

Laser safety information

CAUTION:
When laser products (such as CD-ROMs, DVD drives, fiber optic devices, or transmitters) are installed, note the following:

- **Do not remove the covers. Removing the covers of the laser product could result in exposure to hazardous laser radiation. There are no serviceable parts inside the device.**
- **Use of controls or adjustments or performance of procedures other than those specified herein might result in hazardous radiation exposure.**

DANGER

Some laser products contain an embedded Class 3B laser diode. Note the following:
Laser radiation when open. Do not stare into the beam, do not view directly with optical instruments, and avoid direct exposure to the beam.

Liquid crystal display (LCD) notice

DANGER

To avoid shock hazards:

- **Do not remove the covers.**
- **Do not operate this product unless the stand is attached.**
- **Do not connect or disconnect this product during an electrical storm.**
- **The power cord plug must be connected to a properly wired and grounded power outlet.**
- **Any equipment to which this product will be attached must also be connected to properly wired and grounded power outlets.**
- **To isolate the monitor from the electrical supply, you must remove the plug from the power outlet. The power outlet should be easily accessible.**

Handling:

- If your monitor weighs more than 18 kg (39.68 lb), we recommend that it be moved or lifted by two people.

Product disposal (TFT monitors):

- The fluorescent lamp in the liquid crystal display contains mercury; dispose according to local, state, or federal laws.

Battery warnings:

- Risk of explosion if battery is replaced by an incorrect type.
- Dispose of used batteries according to the instructions.

Use earphones, headphones, or a headset

- If your computer has both a headphone connector and an audio line-out connector, always use the headphone connector for earphones, headphones, or a headset. However, the headphone connector does not support the microphone of the headset.
- If your computer has both a headset connector and an audio line-out connector, always use the headset connector for earphones, headphones, or a headset.



Excessive sound pressure from earphones and headphones can cause hearing loss. Adjustment of the equalizer to maximum increases the earphone and headphone output voltage and the sound pressure level. Therefore, to protect your hearing, adjust the equalizer to an appropriate level.

Excessive use of headphones or earphones for a long period of time at high volume can be dangerous if the output of the headphone or earphone connectors do not comply with specifications of EN 50332-2. The headphone output connector of your computer complies with EN 50332-2 Sub clause 7. This specification limits the computer's maximum wide band true RMS output voltage to 150 mV. To help protect against hearing loss, ensure that the headphones or earphones you use also comply with EN 50332-2 (Clause 7

Limits) or a wide band characteristic voltage of 75 mV. Using headphones that do not comply with EN 50332-2 can be dangerous due to excessive sound pressure levels.

If your Lenovo computer came with headphones or earphones in the packaging, as a set, the combination of the headphones or earphones and the computer already complies with the specifications of EN 50332-1. If different headphones or earphones are used, ensure that they comply with EN 50332-1 (Clause 6.5 Limitation Values). Using headphones that do not comply with EN 50332-1 can be dangerous due to excessive sound pressure levels.

Choking hazard notice



CHOKING HAZARD – Product contains small parts.

Keep away from children under three years.

Plastic bag notice

DANGER

Plastic bags can be dangerous. Keep plastic bags away from babies and children to avoid danger of suffocation.

Glass parts notice

CAUTION:
Some parts of your product may be made of glass. This glass could break if the product is dropped on a hard surface or receives a substantial impact. If glass breaks, do not touch or attempt to remove it. Stop using your product until the glass is replaced by trained service personnel.

Computer placement notices

Inappropriate computer placement might cause harm to children.

- Place the computer on a sturdy piece of low-rise furniture or furniture that has been anchored.
- Do not place the computer at the edge of the furniture.
- Keep the computer cables out of the reach of children.
- Some items, such as toys, might attract children. Keep such items away from the computer.

Supervise children in rooms where the above safety instructions cannot be fully implemented.

Hazardous energy statement

DANGER

Disconnect all power cords from electrical outlets before removing the computer cover or any part that has the above label attached.

DO NOT disassemble components that have the above label attached. There are no serviceable parts inside these components.

Your product is designed for safe use. However, hazardous voltage, current, and energy levels are present inside any component that has this label attached. Disassembling of these components might cause fire or might even result in death. If you suspect a problem with one of these parts, contact a service technician.

CAUTION:



Bright Light, possible skin or eye damage. Disconnect power before servicing.

CAUTION:



Infrared Light, possible skin or eye damage. Disconnect power before servicing.

Eye comfort

The property of the display in combination with following notes result in reduced eye fatigue and increased comfort.

For tips on how to minimize visual fatigue, please go to https://www.lenovo.com/us/en/safecomp/ to visit “Minimizing Visual Fatigue”.

Tip-over hazard prevention notice

The computer may cause harm to children if it is not located in an appropriate place. Follow the tips below to protect children from harm caused by the computer tipping over:

- Place the computers or monitors on sturdy furniture with a low base or furniture that has been anchored. Push the computers or monitors as far from the edge of the furniture as possible.
- Keep remote controls, toys, and other items that might attract children away from the computers or monitors
- Keep the computer or monitor cables out of the reach of children.
- Supervise children in rooms where these safety tips have not been followed.

CAUTION:
Some parts of your product may be made of glass. This glass could break if the product is dropped on a hard surface or receives a substantial impact. If glass breaks, do not touch it or attempt to remove it. Stop using your product until the glass is replaced by trained service personnel.

Static electricity prevention

Static electricity, although harmless to you, can seriously damage computer components and options. Improper handling of static-sensitive parts can damage the part. When you unpack an option or CRU, do not open the static-protective packaging containing the part until the instructions direct you to install it.

When you handle options or CRUs, or perform any work inside the computer, take the following precautions to avoid static-electricity damage:

- Limit your movement. Movement can cause static electricity to build up around you.
- Always handle components carefully. Handle adapters, memory modules, and other circuit boards by the edges. Never touch exposed circuitry.
- Prevent others from touching components.
- When you install a static-sensitive option or CRU, touch the static-protective packaging containing the part to a metal expansion-slot cover or other unpainted metal surface on the computer for at least two seconds. This reduces static electricity in the packaging and your body.
- When possible, remove the static-sensitive part from the static-protective packaging and install the part without setting it down. When this is not possible, place the static-protective packaging on a smooth, level surface and place the part on it.
- Do not place the part on the computer cover or other metal surface.

Operating environment

Maximum altitude (without pressurization)

- Operating: From 0 m (0 ft) to 3048 m (10 000 ft)
- Storage: From 0 m (0 ft) to 12192 m (40 000 ft)

Temperature

- Operating: From 5°C (41°F) to 35°C (95°F)
- Storage:
  - For common desktop computers: From -40°C (-40°F) to 60°C (140°F)
  - For all-in-one desktop computers: From -20°C (-4°F) to 60°C (140°F)

Relative humidity

- Operating: 20%-80% (non-condensing)
- Storage: 10%–90% (non-condensing)

Cleaning and maintenance

With appropriate care and maintenance, your computer will serve you reliably. The following topics offer information to help you keep your computer working with best performance.

Basic maintenance tips

Here are some basic points about keeping your computer functioning properly:

- Keep the computer in a clean, dry environment. Ensure that the computer rests on a flat, steady surface.
- Do not cover any of air vents. These air vents provide airflow to keep the computer from overheating.

- Keep electrical appliances such as an electric fan, radio, high-powered speakers, air conditioner, and microwave oven away from your computer because the strong magnetic fields generated by these appliances can damage the monitor and data on the storage drive.
- Keep food and drinks away from all parts of the computer. Food particles and spills might make the keyboard and mouse stick and unusable.
- Do not get the power switches or other controls wet. Moisture can damage these parts and cause an electrical hazard.
- Always disconnect a power cord by grasping the plug instead of the cord.
- Keep the computer software, device drivers, and operating system up-to-date.
- Empty your recycle bin on a regular basis.
- Clean out your Inbox, Sent Items, and Deleted Items folders in your e-mail application on a regular basis.
- Clean up files and free up storage drive space and memory space occasionally to prevent performance problems.
- Keep a log book. Entries might include major software or hardware changes, device-driver updates, intermittent problems and what you did to resolve them, and other issues you might have experienced. The cause of a problem might be change in hardware, change in software, or any other actions that might have taken place. A log book can help you or a Lenovo technician determine the cause of a problem.
- Back up your data on the storage drive regularly. You can restore the storage drive from a backup.
- Create a recovery medium as early as possible. You can use the recovery medium to recover your operating system even if Windows fails to start up.
- Get the most up-to-date operating system update patches, software programs, and device drivers.

Maintenance tips about moving the computer

Before moving the computer, take the following precautions:

1. Back up your data on the storage drive.
2. Remove any media from the drives and turn off all connected devices and the computer. Then, disconnect all power cords from electrical outlets and disconnect all cables that are connected to the computer.
3. If you saved the original shipping cartons and packing materials, use them to pack the units. If you are using different cartons, cushion the units to avoid damage.

When you move the computer to another country or region, you must take local electrical standards into consideration. If the local electrical outlet style is different from the type you are currently using, contact the Lenovo Customer Support Center to purchase either an electrical plug adapter or a new power cord.

Clean your computer

CAUTION:
Remove any media from the drives and turn off all connected devices and the computer. Then, disconnect all power cords from electrical outlets and disconnect all cables that are connected to the computer.

It is a good practice to clean your computer periodically to protect the surfaces and ensure trouble-free operation.

Clean the computer surface: Wipe it with a lint-free cloth dampened in mild soap and water. Avoid applying liquids directly to the surface.

Clean the keyboard: Wipe the keys one by one with a lint-free cloth dampened in mild soap and water. If you wipe several keys at a time, the cloth might hook onto an adjacent key and possibly damage it. Avoid

spraying cleaner directly onto the keyboard. To remove any crumbs or dust from beneath the keys, you can use a camera blower with a brush or use cool air from a hair dryer.

Clean the computer screen: Scratches, oil, dust, chemicals, and ultraviolet light can affect the performance of your computer screen. Use a dry, soft lint-free cloth to wipe the screen gently. If you see a scratchlike mark on your screen, it might be a stain. Wipe or dust the stain gently with a soft, dry cloth. If the stain remains, moisten a soft, lint-free cloth with water or eyeglass cleaner, but do not apply liquids directly to your computer screen. Ensure that the computer screen is dry before closing it.

Appendix B. Accessibility and ergonomic information

This chapter provides information about accessibility and ergonomics.

Accessibility information

Lenovo is committed to providing users who have hearing, vision, and mobility limitations with greater access to information and technology. You can get the most up-to-date accessibility information from https://www.lenovo.com/accessibility.

If you need additional support with the accessibility features, go to https://pcsupport.lenovo.com/supportphonelist to find the support phone numbers for your country or region.

Ergonomic information

Good ergonomic practice is important to get the most from your personal computer and to avoid discomfort. Arrange your workplace and the equipment you use to suit your individual needs and the kind of work that you perform. In addition, use healthy work habits to maximize your performance and comfort when using your computer.

Working in the virtual office might mean adapting to frequent changes in your environment. Adapting to the surrounding light sources, active seating, and the placement of your computer hardware, can help you improve your performance and achieve greater comfort.

This example shows someone in a conventional setting. Even when not in such a setting, you can follow many of these tips. Develop good habits, and they will serve you well.



General posture: Make minor modifications in your working posture to deter the onset of discomfort caused by long periods of working in the same position. Frequent short breaks from your work also help to prevent minor discomfort associated with your working posture.

Display: Position the display to maintain a comfortable viewing distance of 510 mm to 760 mm (20 inches to 30 inches). Avoid glare or reflections on the display from overhead lighting or outside sources of light. Keep the display screen clean and set the brightness to levels that enable you to see the screen clearly. Press the brightness control keys to adjust display brightness.

Head position: Keep your head and neck in a comfortable and neutral (vertical, or upright) position.

Chair: Use a chair that gives you good back support and seat height adjustment. Use chair adjustments to best suit your comfort posture.

© Copyright Lenovo 2021, 2023

Arm and hand position: If available, use chair arm rests or an area on your working surface to provide weight support for your arms. Keep your forearms, wrists, and hands in a relaxed and neutral (horizontal) position. Type with a soft touch without pounding the keys.

Leg position: Keep your thighs parallel to the floor and your feet flat on the floor or on a footrest.

Appendix C. Supplemental information about the Ubuntu operating system

In limited countries or regions, Lenovo offers customers an option to order computers with the preinstalled Ubuntu® operating system.

If the Ubuntu operating system is available on your computer, read the following information before you use the computer. Ignore any information related to Windows-based programs, utilities, and Lenovo preinstalled applications in this documentation.

Access the Lenovo Limited Warranty

This product is covered by the terms of the Lenovo Limited Warranty (LLW), version L505-0010-02 08/2011. You can view the LLW in a number of languages from the following Web site. Read the Lenovo Limited Warranty at:
https://www.lenovo.com/warranty/llw_02

The LLW also is preinstalled on the computer. To access the LLW, go to the following directory:

```
/opt/Lenovo
```

If you cannot view the LLW either from the Web site or from your computer, contact your local Lenovo office or reseller to obtain a printed version of the LLW.

Access the Ubuntu help system

The Ubuntu help system provides information about how to use the Ubuntu operating system. To access the help system from Home Screen, move your pointer to the Launch bar, and then click the **Help** icon. If you cannot find the **Help** icon from the Launch bar, click the **Search** icon on the bottom left, and type Help to search it.

To learn more about the Ubuntu operating system, go to:
https://www.ubuntu.com

Get support information

If you need help, service, technical assistance, or more information about the Ubuntu operating system or other applications, contact the provider of the Ubuntu operating system or the provider of the application. If you need the service and support for hardware components shipped with your computer, contact Lenovo. For more information about how to contact Lenovo, refer to the *User Guide* and *Safety and Warranty Guide*.

To access the latest *User Guide* and *Safety and Warranty Guide*, go to:
https://pcsupport.lenovo.com

© Copyright Lenovo 2021, 2023

Appendix D. Compliance and TCO Certified information

This chapter provides regulatory, environmental, RoHS, and ENERGY STAR information about Lenovo products.

Radio frequency compliance statements

Computer models equipped with wireless communications comply with the radio frequency and safety standards of any country or region in which it has been approved for wireless use.

Besides this document, ensure that you read the *Regulatory Notice* for your country or region before using the wireless devices contained in your computer.

Locate wireless regulatory notices

For more information about the wireless regulatory notices, refer to the *Regulatory Notice* at:
https://pcsupport.lenovo.com

European Union (EU) / United Kingdom (UK) — Radio Equipment Compliance



EU Contact: Lenovo (Slovakia), Landererova 12, 811 09 Bratislava, Slovakia



UK contact: Lenovo, Redwood, Crockford Lane, Basingstoke, RG24 8WQ, UK.

This product is in conformity with all the requirements and essential norms that apply to EU Council Radio Equipment Directive 2014/53/EU on the approximation of the laws of the Member States, as well as the UK Radio Equipment Regulations SI 2017 No. 1206, relating to radio equipment.

The full text of the system EU declaration of conformity is available at:
https://www.lenovo.com/us/en/compliance/eu-doc

The full text of the system UK declaration of conformity is available at:
https://www.lenovo.com/us/en/compliance/uk-doc

Lenovo cannot accept responsibility for any failure to satisfy the protection requirements resulting from a non-recommended modification of the product, including the installation of option cards from other manufacturers. This product has been tested and found to comply with the limits for Class B equipment according to European and UK compliance standards. The limits for Class B equipment were derived for typical residential environments to provide reasonable protection against interference with certified communication devices.

Brazil

Este equipamento não tem direito à proteção contra interferência prejudicial e não pode causar interferência em sistemas devidamente autorizados.

© Copyright Lenovo 2021, 2023

This equipment is not protected against harmful interference and may not cause interference with duly authorized systems.

Mexico

Advertencia: En Mexico la operación de este equipo está sujeta a las siguientes dos condiciones: (1) es posible que este equipo o dispositivo no cause interferencia perjudicial y (2) este equipo o dispositivo debe aceptar cualquier interferencia, incluyendo la que pueda causar su operación no deseada.

Singapore



Korea

무선설비 전파 혼신 **(사용주파수 2400~2483.5 , 5725~5825 무선제품해당)**

해당 무선설비가 전파혼신 가능성이 있으므로 인명안전과 관련된 서비스는 할 수 없음

SAR 정보

본 장치는 전파 노출에 대한 가이드라인을 충족합니다.

본 장치는 무선 송수신기 입니다. 본 장치는 국제 가이드라인으로 권장되는 전파 노출에 대한 제한을 초과하지 않도록 설계되었습니다. 장치 액세서리 및 최신 부품을 사용할 경우 SAR 값이 달라질 수 있 습니다. SAR 값은 국가 보고 및 테스트 요구 사항과 네트워크 대역에 따라 다를 수 있습니다. 본 장치 는 사람의 신체에서 20mm 이상의 거리에서 사용할 수 있습니다.

Environmental information of countries and regions

This section provides environmental, recycling, and RoHS information about Lenovo products.

Recycling and environmental information

Lenovo encourages owners of information technology (IT) equipment to responsibly recycle their equipment when it is no longer needed. Lenovo offers a variety of programs and services to assist equipment owners in recycling their IT products. For information about recycling Lenovo products, go to:
https://www.lenovo.com/us/en/compliance/recycling

The latest environmental information about our products is available at:
https://www.lenovo.com/us/en/compliance/eco-declaration

Important battery recycling and WEEE information

Take back and recycling information for WEEE and batteries/accumulators in the European Union and the United Kingdom



The crossed-out wheeled bin marking applies only to countries with WEEE and batteries waste regulations including the European Union (EU), and United Kingdom (UK).

Appliances and batteries/accumulators are labeled in accordance with local regulations concerning waste electrical and electronic equipment (WEEE) and waste batteries and waste accumulators. These regulations determine the framework for the return and recycling of used appliances and used batteries/accumulators as applicable within each geography. This label is applied to various products to indicate that the product is not to be thrown away, but rather put in the established collection systems for reclaiming these end of life products.

The label on the battery may also include a chemical symbol for the metal concerned in the battery (Pb for lead, Hg for mercury, and Cd for cadmium).

Users of electrical and electronic equipment (EEE) and users of batteries/accumulators with the crossed-out wheeled bin marking must not dispose of end of life products as unsorted municipal waste, but use the collection framework available to them for the return, recycle, and recovery of WEEE and waste batteries/ accumulators and to minimize any potential effects of EEE and batteries on the environment and human health due to the presence of hazardous substances.

Lenovo electrical and electronic equipment (EEE) may contain parts and components, which at end-of-life might qualify as hazardous waste.

EEE and waste electrical and electronic equipment (WEEE) can be delivered free of charge to the place of sale or any distributor that sells electrical and electronic equipment of the same nature and function as the used EEE or WEEE.

Before placing electrical and electronic equipment (EEE) in the waste collection stream or in waste collection facilities, the end user of equipment containing batteries and/or accumulators must remove those batteries and accumulators for separate collection.

Dispose of lithium batteries and battery packs from Lenovo products:
A coin-cell type lithium battery might be installed inside your Lenovo product. You can find details about the battery in the product documentation. If the battery needs to be replaced, contact your place of purchase or contact Lenovo for service. If you need to dispose of a lithium battery, insulate it with vinyl tape, contact your place of purchase or a waste-disposal operator, and follow their instructions.

Your Lenovo device might contain a lithium-ion battery pack or a nickel metal hydride battery pack. You can find details on the battery pack in the product documentation. If you need to dispose of a battery pack, insulate it with vinyl tape, contact Lenovo sales, service, or your place of purchase, or a waste-disposal operator, and follow their instructions. You also can refer to the instructions provided in the user guide for your product.

For proper collection and treatment, go to:

https://www.lenovo.com/environment

For additional WEEE information, go to:

https://www.lenovo.com/recycling

WEEE information for Hungary

Lenovo, as a producer, bears the cost incurred in connection with the fulfillment of Lenovo's obligations under Hungary Law No. 197/2014 (VIII.1.) subsections (1)-(5) of section 12.

Japan recycling statements

Collect and recycle a disused Lenovo computer or monitor

If you are a company employee and need to dispose of a Lenovo computer or monitor that is the property of the company, you must do so in accordance with the Law for Promotion of Effective Utilization of Resources. Computers and monitors are categorized as industrial waste and should be properly disposed of by an industrial waste disposal contractor certified by a local government. In accordance with the Law for Promotion of Effective Utilization of Resources, Lenovo Japan provides, through its PC Collecting and Recycling Services, for the collecting, reuse, and recycling of disused computers and monitors. For details, visit the Lenovo Web site at:
https://www.lenovo.com/us/en/social_responsibility/sustainability/ptb_japan

Pursuant to the Law for Promotion of Effective Utilization of Resources, the collecting and recycling of home-used computers and monitors by the manufacturer was begun on October 1, 2003. This service is provided free of charge for home-used computers sold after October 1, 2003. For details, go to:
https://www.lenovo.com/us/en/social_responsibility/sustainability/ptb_japan

Dispose of Lenovo computer components

Some Lenovo computer products sold in Japan may have components that contain heavy metals or other environmental sensitive substances. To properly dispose of disused components, such as a printed circuit board or drive, use the methods described above for collecting and recycling a disused computer or monitor.

Dispose of disused lithium batteries from Lenovo computers

A button-shaped lithium battery is installed inside your Lenovo computer to provide power to the computer clock while the computer is off or disconnected from the main power source. If you need to replace it with a new one, contact your place of purchase or contact Lenovo for service. If you need to dispose of a disused lithium battery, insulate it with vinyl tape, contact your place of purchase or an industrial-waste-disposal operator, and follow their instructions.

Disposal of a lithium battery must comply with local ordinances and regulations.

Brazil recycling information

Declarações de Reciclagem no Brasil

Descarte de um Produto Lenovo Fora de Uso

Equipamentos elétricos e eletrônicos não devem ser descartados em lixo comum, mas enviados à pontos de coleta, autorizados pelo fabricante do produto para que sejam encaminhados e processados por empresas especializadas no manuseio de resíduos industriais, devidamente certificadas pelos orgãos ambientais, de acordo com a legislação local.

A Lenovo possui um canal específico para auxiliá-lo no descarte desses produtos. Caso você possua um produto Lenovo em situação de descarte, ligue para o nosso SAC ou encaminhe um e-mail para: reciclar@lenovo.com, informando o modelo, número de série e cidade, a fim de enviarmos as instruções para o correto descarte do seu produto Lenovo.

Recycling information for mainland China

《废弃电器电子产品回收处理管理条例》提示性说明

联想鼓励拥有联想品牌产品的用户当不再需要此类产品时，遵守国家废弃电器电子产品回收处理相关法律法规，将其交给当地具有国家认可的回收处理资质的厂商进行回收处理。更多回收服务信息，请点击进入http://support.lenovo.com.cn/activity/551.htm

Battery recycling information for Taiwan



Restriction of Hazardous Substances (RoHS) Directive of countries and regions

The latest environmental information about Lenovo products is available at:
https://www.lenovo.com/us/en/compliance/eco-declaration

European Union (EU) / United Kingdom (UK) RoHS

This Lenovo product, with included parts (cables, cords, and so on) meets the requirements of EU Directive 2011/65/EU (as amended by Directive 2015/863/EU) and UK SI 2012 No. 3032 on the restriction of the use of certain hazardous substances in electrical and electronic equipment ("RoHS recast" or "RoHS 2").

For more information about Lenovo worldwide compliance on RoHS, go to:
https://www.lenovo.com/rohs-communication

Turkish WEEE / RoHS

Turkish WEEE/RoHS
Türkiye AEEE yönetmeliğine Uygunluk Beyanı

Bu Lenovo ürünü, T.C. Çevre ve Şehircilik Bakanlığı'nın „Atık Elektrikli ve Elektronik Eşyaların Kontrolü Yönetmeliğine (AEEE)" uygundur.

AEEE yönetmeligne Uygundur.

Ukraine RoHS

Цим підтверджуємо, що продукція Леново відповідає вимогам нормативних актів України, які обмежують вміст небезпечних речовин

India RoHS

RoHS compliant as per E-Waste (Management) Rules.

Mainland China RoHS

产品中有害物质的名称及含量

部件名称	有害物质					
	铅(Pb)	汞(Hg)	镉(Cd)	六价铬 (Cr(VI))	多溴联苯 (PBB)	多溴二苯醚 (PBDE)
印刷电路板组件*	X	O	O	O	O	O
硬盘	X	O	O	O	O	O
光驱	X	O	O	O	O	O
内存	X	O	O	O	O	O
电脑I/O 附件	X	O	O	O	O	O
电源	X	O	O	O	O	O
键盘	X	O	O	O	O	O
鼠标	X	O	O	O	O	O
机箱/ 附件	X	O	O	O	O	O
液晶面板	X	O	O	O	O	O
电池	X	O	O	O	O	O

本表格依据 SJ/T 11364 的规定编制。
O：表示该有害物质在该部件所有均质材料中的含量均在 GB/T 26572 规定的限量要求以下。
X：表示该有害物质至少在该部件的某一均质材料中的含量超出 GB/T 26572 规定的限量要求。
注：表中标记“X”的部件，皆因全球技术发展水平限制而无法实现有害物质的替代。
印刷电路板组件*：包括印刷电路板及其零部件、电容和连接器。
根据型号的不同，可能不会含有以上的所有部件，请以实际购买机型为准。



在中华人民共和国境内销售的电子信息产品必须标识此标志，标志内的数字代表在正常使用状态下的产品的环保使用期限。

中国大陆 RoHS 合格评定制度标识

依照《电器电子产品有害物质限制使用合格评定制度实施安排》，《绿色产品标识使用管理办法》以及市场监管总局关于明确电器电子产品有害物质限制使用合格评定制度“供方符合性标志”的公告中对于合格评定标识的相关要求，联想公司针对纳入《电器电子产品有害物质限制使用达标管理目录》内的产品，使用自我声明的合格评定方式，并使用如下合格评定标识：



Taiwan RoHS

臺灣 RoHS - 個人電腦

單元	限用物質及其化學符號					
	鉛 (Pb)	汞 (Hg)	鎘 (Cd)	六價鉻 (Cr^{+6})	多溴聯苯 (PBB)	多溴二苯醚 (PBDE)
印刷電路板組件	—	○	○	○	○	○
硬碟	—	○	○	○	○	○
光碟機(選配件)	—	○	○	○	○	○
記憶體	—	○	○	○	○	○
電源供應器	—	○	○	○	○	○
鍵盤(選配件)	—	○	○	○	○	○
滑鼠(選配件)	—	○	○	○	○	○
機殼	—	○	○	○	○	○
配件（電源線）	—	○	○	○	○	○
散熱模組	—	○	○	○	○	○

備考1. 〝超出0.1 wt %〞及〝超出0.01 wt %〞係指限用物質之百分比含量超出百分比含量基準值。

備考2. 〝○〞係指該項限用物質之百分比含量未超出百分比含量基準值。

備考3. 〝—〞係指該項限用物質為排除項目。

臺灣 RoHS - 一體機

單元	限用物質及其化學符號					
	鉛 (Pb)	汞 (Hg)	鎘 (Cd)	六價鉻 (Cr^{+6})	多溴聯苯 (PBB)	多溴二苯醚 (PBDE)
印刷電路板組件	—	○	○	○	○	○
硬碟	—	○	○	○	○	○
光碟機(選配件)	—	○	○	○	○	○
記憶體	—	○	○	○	○	○
電腦I/O配件	—	○	○	○	○	○
電源供應器	—	○	○	○	○	○
鍵盤(選配件)	—	○	○	○	○	○
滑鼠(選配件)	—	○	○	○	○	○
機殼	—	○	○	○	○	○
螢幕	—	○	○	○	○	○
配件（電源線）	—	○	○	○	○	○
散熱模組	—	○	○	○	○	○

備考1. 〝超出0.1 wt %〞及〝超出0.01 wt %〞係指限用物質之百分比含量超出百分比含量基準值。

備考2. 〝○〞係指該項限用物質之百分比含量未超出百分比含量基準值。

備考3. 〝—〞係指該項限用物質為排除項目。

Electromagnetic emission notices

Federal Communications Commission (FCC) Supplier's Declaration of Conformity

The following information refers to ThinkCentre M90t, machine types: 11CY, 11D0, 11D4, 11D5.

This equipment has been tested and found to comply with the limits for a Class B digital device, pursuant to Part 15 of the FCC Rules. These limits are designed to provide reasonable protection against harmful

interference in a residential installation. This equipment generates, uses, and can radiate radio frequency energy and, if not installed and used in accordance with the instructions, may cause harmful interference to radio communications. However, there is no guarantee that interference will not occur in a particular installation. If this equipment does cause harmful interference to radio or television reception, which can be determined by turning the equipment off and on, the user is encouraged to try to correct the interference by one or more of the following measures:

- Reorient or relocate the receiving antenna.
- Increase the separation between the equipment and receiver.
- Connect the equipment into an outlet on a circuit different from that to which the receiver is connected.
- Consult an authorized dealer or service representative for help.

Lenovo is not responsible for any radio or television interference caused by using other than recommended cables and connectors or by unauthorized changes or modifications to this equipment. Unauthorized changes or modifications could void the user's authority to operate the equipment.

This device complies with Part 15 of the FCC Rules. Operation is subject to the following two conditions: (1) this device may not cause harmful interference, and (2) this device must accept any interference received, including interference that may cause undesired operation.

Responsible Party:
Lenovo (United States) Incorporated
7001 Development Drive
Morrisville, NC 27560
Email: FCC@lenovo.com

Industry Canada compliance statement

CAN ICES-003(B) / NMB-003(B)

European Union / United Kingdom (UK) conformity

European Union (EU) / United Kingdom (UK) — Electromagnetic Compatibility Compliance

This product is in conformity with the protection requirements of EU Council Directive 2014/30/EU on the approximation of the laws of the Member States, as well as UK SI 2016 No. 1091 with amendments, relating to the electromagnetic compatibility limits for Class B equipment. These Class B requirements are intended to offer adequate protection to broadcast services within residential environments.

EU ErP (EcoDesign) Directive (2009/125/EC) - external power adapters (Regulation (EU) 2019/1782), Ecodesign for Energy-Related Products Regulations 2010 - UK SI 2010 No. 2617 (Ext PSU), SI 2020 No. 485 (Ntwk Standby), SI 2014 No. 1290 as amended

Lenovo products are compliant with the EU EcoDesign (ErP) Directive and UK EcoDesign for Energy-related Products Regulations. Refer to the following for details. For EU, refer to the system declaration https://www.lenovo.com/us/en/compliance/eu-doc, and for UK refer to the system declaration https://www.lenovo.com/us/en/compliance/uk-doc.

German Class B compliance statement

Hinweis zur Einhaltung der Klasse B zur elektromagnetischen Verträglichkeit

Dieses Produkt entspricht den Schutzanforderungen der EU-Richtlinie zur elektromagnetischen Verträglichkeit Angleichung der Rechtsvorschriften über die elektromagnetische Verträglichkeit in den EU-Mitgliedsstaaten und hält die Grenzwerte der Klasse B der Norm gemäß Richtlinie.

Um dieses sicherzustellen, sind die Geräte wie in den Handbüchern beschrieben zu installieren und zu betreiben. Des Weiteren dürfen auch nur von der Lenovo empfohlene Kabel angeschlossen werden. Lenovo übernimmt keine Verantwortung für die Einhaltung der Schutzanforderungen, wenn das Produkt ohne Zustimmung der Lenovo verändert bzw. wenn Erweiterungskomponenten von Fremdherstellern ohne Empfehlung der Lenovo gesteckt/eingebaut werden.

Zulassungsbescheinigung laut dem Deutschen Gesetz über die elektromagnetische Verträglichkeit von Betriebsmitteln, EMVG vom 20. Juli 2007 (früher Gesetz über die elektromagnetische Verträglichkeit von Geräten), bzw. der EU Richtlinie 2014/30/EU, der EU Richtlinie 2014/53/EU Artikel 3.1b), für Geräte der Klasse B.

Dieses Gerät ist berechtigt, in Übereinstimmung mit dem Deutschen EMVG das EG-Konformitätszeichen - CE - zu führen. Verantwortlich für die Konformitätserklärung nach Paragraf 5 des EMVG ist die Lenovo (Deutschland) GmbH, Meitnerstr. 9, D-70563 Stuttgart.

Japan VCCI Class B compliance statement

この装置は、クラスB機器です。この装置は、住宅環境で使用することを目的としていますが、この装置がラジオやテレビジョン受信機に近接して使用されると、受信障害を引き起こすことがあります。
取扱説明書に従って正しい取り扱いをして下さい。

VCCI-B

Japan compliance statement for products which connect to the power mains with rated current less than or equal to 20 A per phase

日本の定格電流が 20A/相 以下の機器に対する高調波電流規制
高調波電流規格 JIS C 61000-3-2 適合品

Japan notice for ac power cord

The ac power cord shipped with your product can be used only for this specific product. Do not use the ac power cord for other devices.

本製品およびオプションに電源コード・セットが付属する場合は、
それぞれ専用のものになっていますので他の電気機器には使用し
ないでください。

Other compliance and TCO Certified information of countries and regions

This section provides other compliance information about Lenovo products.

Certification-related information

Product name: ThinkCentre M90t

Machine types: 11CY, 11D0, 11D4, and 11D5

The latest compliance information is available at:
https://www.lenovo.com/us/en/compliance

TCO Certified

Selected models are TCO Certified and bear the TCO Certified logo.

Note: TCO Certified is an international third-party sustainability certification for IT products. For details, go to https://www.lenovo.com/us/en/compliance/tco.

Export classification notice

This product is subject to the United States Export Administration Regulations (EAR) and has an Export Classification Control Number (ECCN) of 5A992.c. It can be re-exported except to any of the embargoed countries in the EAR E1 country list.

Lenovo product service information for Taiwan

委製商/進口商名稱: 荷蘭商聯想股份有限公司台灣分公司
進口商地址: 台北市中山區樂群三路128號16樓
進口商電話: 0800-000-702 (代表號)

Taiwan precautionary vision statement

警語：使用過度恐傷害視力

注意事項：

- 使用30分鐘請休息10分鐘。
- 未滿2歲幼兒不看螢幕，2歲以上每天看螢幕不要超過1小時。

Keyboard and mouse compliance statement for Taiwan

本產品隨貨附已取得經濟部標準檢驗局認可之PS/2或USB的鍵盤與滑鼠一組

Eurasian compliance mark

EAC

Brazil audio notice

Ouvir sons com mais de 85 decibéis por longos períodos pode provocar danos ao sistema auditivo.

ENERGY STAR model information

ENERGY STAR is a joint program of the U.S. Environmental Protection Agency and the U.S. Department of Energy aimed at saving money and protecting the environment through energy efficient products and practices.

Lenovo is proud to offer products with the ENERGY STAR certified designation. Lenovo computers, if carry an ENERGY STAR mark, have been designed and tested to conform to the ENERGY STAR program requirements for computers as prescribed by the U.S. Environmental Protection Agency. For a certified computer, an ENERGY STAR mark may be affixed to the product, the product packaging, or displayed electronically on the E-label screen or the power settings interface.

By using ENERGY STAR compliant products and taking advantage of the power management features of your computer, you reduce the consumption of electricity. Reduced electrical consumption contributes to potential financial savings, a cleaner environment, and the reduction of greenhouse gas emissions. For more information about ENERGY STAR, go to https://www.energystar.gov.

Lenovo encourages you to make efficient use of energy an integral part of your day-to-day operations. To help in this endeavor, Lenovo has preset a default power plan. To change the power plan, see “Set the power plan” on page 9.

Appendix E. Notices and trademarks

Notices

Lenovo may not offer the products, services, or features discussed in this document in all countries. Consult your local Lenovo representative for information on the products and services currently available in your area. Any reference to a Lenovo product, program, or service is not intended to state or imply that only that Lenovo product, program, or service may be used. Any functionally equivalent product, program, or service that does not infringe any Lenovo intellectual property right may be used instead. However, it is the user's responsibility to evaluate and verify the operation of any other product, program, or service.

Lenovo may have patents or pending patent programs covering subject matter described in this document. The furnishing of this document does not give you any license to these patents. You can send license inquiries, in writing, to:

Lenovo (United States), Inc.
8001 Development Drive
Morrisville, NC 27560
U.S.A.
Attention: Lenovo Director of Licensing

LENOVO PROVIDES THIS PUBLICATION "AS IS" WITHOUT WARRANTY OF ANY KIND, EITHER EXPRESS OR IMPLIED, INCLUDING, BUT NOT LIMITED TO, THE IMPLIED WARRANTIES OF NON-INFRINGEMENT, MERCHANTABILITY OR FITNESS FOR A PARTICULAR PURPOSE. Some jurisdictions do not allow disclaimer of express or implied warranties in certain transactions, therefore, this statement may not apply to you.

Changes are made periodically to the information herein; these changes will be incorporated in new editions of the publication. To provide better service, Lenovo reserves the right to improve and/or modify the products and software programs described in the manuals included with your computer, and the content of the manual, at any time without additional notice.

The software interface and function and hardware configuration described in the manuals included with your computer might not match exactly the actual configuration of the computer that you purchase. For the configuration of the product, refer to the related contract (if any) or product packing list, or consult the distributor for the product sales. Lenovo may use or distribute any of the information you supply in any way it believes appropriate without incurring any obligation to you.

The products described in this document are not intended for use in implantation or other life support applications where malfunction may result in injury or death to persons. The information contained in this document does not affect or change Lenovo product specifications or warranties. Nothing in this document shall operate as an express or implied license or indemnity under the intellectual property rights of Lenovo or third parties. All information contained in this document was obtained in specific environments and is presented as an illustration. The result obtained in other operating environments may vary.

Lenovo may use or distribute any of the information you supply in any way it believes appropriate without incurring any obligation to you.

Any references in this publication to non-Lenovo Web sites are provided for convenience only and do not in any manner serve as an endorsement of those Web sites. The materials at those Web sites are not part of the materials for this Lenovo product, and use of those Web sites is at your own risk.

© Copyright Lenovo 2021, 2023

Any performance data contained herein was determined in a controlled environment. Therefore, the result obtained in other operating environments may vary significantly. Some measurements may have been made on development-level systems and there is no guarantee that these measurements will be the same on generally available systems. Furthermore, some measurements may have been estimated through extrapolation. Actual results may vary. Users of this document should verify the applicable data for their specific environment.

This document is copyrighted by Lenovo and is not covered by any open source license, including any Linux agreement(s) which may accompany software included with this product. Lenovo may update this document at any time without notice.

For the latest information or any questions or comments, contact or visit the Lenovo Web site:
https://pcsupport.lenovo.com

Trademarks

LENOVO, LENOVO logo, THINKCENTRE, and THINKCENTRE logo are trademarks of Lenovo. Intel and Optane are trademarks of Intel Corporation or its subsidiaries in the U.S. and/or other countries. Microsoft, Windows, and Cortana are trademarks of the Microsoft group of companies. DisplayPort is a trademark of the Video Electronics Standards Association. The term HDMI is a trademark or registered trademark of HDMI Licensing LLC in the United States and other countries. Wi-Fi is a registered trademarks of Wi-Fi Alliance. USB-C is a trademark of USB Implementers Forum. All other trademarks are the property of their respective owners. © 2022 Lenovo.


Lenovo