Lenovo V530-22ICB AIO User Guide and Hardware Maintenance Manual

Energy Star Machine Types: 10US, 10UT, 10UU, and 10UV

Note: Before using this information and the product it supports, be sure to read and understand the *Important Product Information Guide* and Appendix A “Notices” on page 61.

Second Edition (August 2019)

© Copyright Lenovo 2018, 2019.

LIMITED AND RESTRICTED RIGHTS NOTICE: If data or software is delivered pursuant to a General Services Administration “GSA” contract, use, reproduction, or disclosure is subject to restrictions set forth in Contract No. GS-35F-05925.

Contents

Chapter 1. Overview 1
Front view 1
Rear view 2
System board 4
Machine type and model label 5
Adjusting the monitor stand 6

Chapter 2. Specifications 7

Chapter 3. Computer locks 9
Attaching a Kensington-style cable lock 9

Chapter 4. Replacing hardware 11
Before replacing hardware 11
Knowing FRUs (including CRUs) 11
Locating FRUs (including CRUs) 12
Replacing the keyboard or wireless keyboard . . . 14
Replacing the mouse or wireless mouse 15
Replacing the power adapter 18
Replacing the monitor stand 20
Removing the LCD panel 22
Replacing the LCD front decorative cover. 24
Replacing the integrated microphone 25
Replacing the LCD bracket 26
Replacing the integrated camera 27
Replacing the optical drive 28
Replacing the optical drive holder 32
Replacing the storage drive 32
Replacing the power button board 35
Replacing the internal speaker 36
Replacing the I/O board 37
Replacing the system fan 38
Replacing the heat sink 39
Replacing the memory module 41
Replacing the M.2 solid-state drive 43
Replacing the microprocessor 47
Replacing the Wi-Fi card 50
Replacing the Wi-Fi antennas 52
Replacing the system board 53
Replacing the coin-cell battery 54
Replacing the system board frame 56
Replacing the VESA mount bracket 57
Completing the parts replacement 58

Appendix A. Notices 61

Appendix B. Trademarks 63

© Copyright Lenovo 2018, 2019

Chapter 1. Overview

This chapter provides basic information to help you get familiar with your computer.

Front view

Note: Your computer model might look slightly different from the illustration.

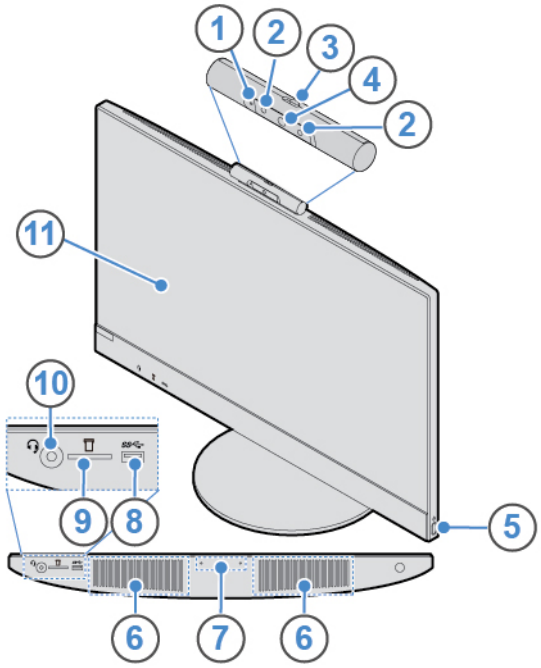

Figure 1. Front view

1 Integrated camera activity indicator (optional)	2 Infrared light-emitting diodes (LEDs) (2) (optional)
3 Integrated camera shield control slider (optional)	4 Integrated camera (optional)
5 Power button	6 Internal speakers (2)
7 Integrated microphone	8 USB 3.1 Gen 1 connector
9 Card reader slot	10 Headset connector
11 Screen	

1 Integrated camera activity indicator (optional)

When the indicator is on, the camera is in use.

2 Infrared light-emitting diodes (LEDs) (optional)

The LEDs are on when you are using the Microsoft® Windows® Hello face authentication feature.

Note: In the Windows 10 operating system, the Windows Hello face authentication feature enables you to log in to the computer using face recognition. For more details, go to:

© Copyright Lenovo 2018, 2019

https://www.microsoft.com

3 Integrated camera shield control slider

Used to cover the integrated camera.

4 Integrated camera

Used to take pictures or hold a video conference.

5 Power button

Used to turn on your computer. When you cannot shut down the computer from the operating system, press and hold the power button for four or more seconds to turn off the computer.

6 Internal speakers

Used to listen to the sounds from your computer without using a headset or headphones.

7 Integrated microphone

Used to record sounds or use speech-recognition software without using a microphone.

8 USB 3.1 Gen 1 connector

Used to connect a USB-compatible device. For optimal data transfer, connect a USB 3.1 Gen 1 device to a USB 3.1 Gen 2 or USB 3.1 Gen 1 connector instead of a USB 2.0 connector.

9 Card reader slot

Used to read data from a supported memory card.

10 Headset connector

Used to connect a headset or headphones to your computer.

11 Screen

Depending on the computer model, your computer screen might support the multi-touch feature. This feature enables you to use one or two fingers to interact with the computer.

Notes:

- To single click, tap the touch screen once with your finger.
- To double-click, tap the touch screen twice without pausing.
- To right-click, tap and hold the touch screen until a round circle is displayed. Then, lift your finger off the touch screen to display a context menu. You can make your selection from the menu.
- To make it easier to read or edit a document, use two fingers to zoom in, zoom out, scroll, or rotate on the touch screen.

Rear view

Note: Your computer model might look slightly different from the illustration.

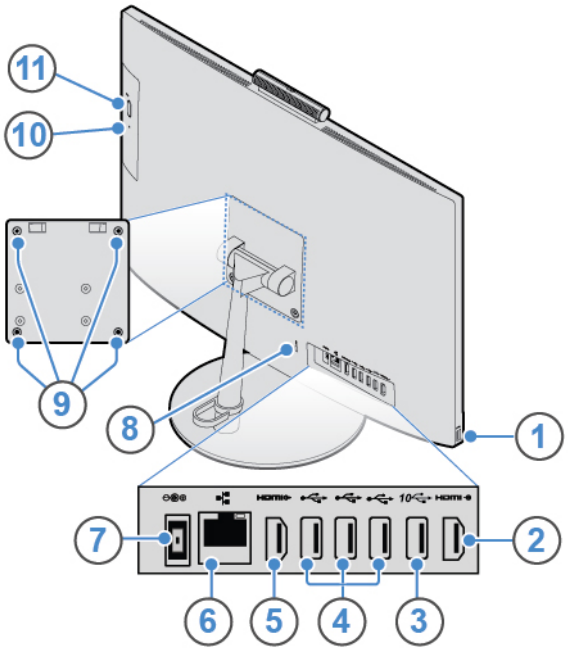

Figure 2. Rear view

1 USB 3.1 Gen 1 connector	2 HDMI™ 1.4 in connector
3 USB 3.1 Gen 2 connector	4 USB 2.0 connectors (3)
5 HDMI 1.4 out connector	6 Ethernet connector
7 Power adapter connector	8 Security-lock slot
9 VESA® threaded holes	10 Optical drive activity indicator (optional)
11 Optical drive eject/close button (optional)	

1 USB 3.1 Gen 1 connector

Used to connect a USB-compatible device. For optimal data transfer, connect a USB 3.1 Gen 1 device to a USB 3.1 Gen 2 or USB 3.1 Gen 1 connector instead of a USB 2.0 connector.

2 HDMI 1.4 out connector

Used to send video and audio signals from your computer to another audio or video device, such as a high-performance monitor.

3 USB 3.1 Gen 2 connector

Used to connect a USB-compatible device. For optimal data transfer, connect a USB 3.1 Gen 2 device to a USB 3.1 Gen 2 connector instead of a USB 3.1 Gen 1 or USB 2.0 connector.

4 USB 2.0 connectors

Used to connect a USB-compatible device. For optimal data transfer, connect a USB 2.0 device to a USB 2.0 connector.

5 HDMI 1.4 in connector

Used to send video and audio signals from your computer to another audio or video device, such as a high-performance monitor.

6 Ethernet connector

Used to connect an Ethernet cable for network access.

7 Power adapter connector

Used to connect the power adapter to your computer for power supply.

8 Security-lock slot

Used to secure a Kensington-style cable lock.

9 VESA threaded holes

Used to connect the matched VESA mount with the matched screws when you install the computer on the wall. When you need to install the computer onto the ceiling or the wall, install four M4 x 10 mm screws there.

Note: Before connecting to the VESA mount, attach a mounting pad with 2.6 mm thickness to each screw hole on the VESA mount.

10 Optical drive activity indicator (optional)

This indicator is on when the optical drive is in use.

11 Optical drive eject/close button (optional)

Used to eject the tray of the optical drive. After you insert a disc into the tray, press the eject/close button to close the tray.

System board

Note: See “Front view” and “Rear view” for additional component descriptions.

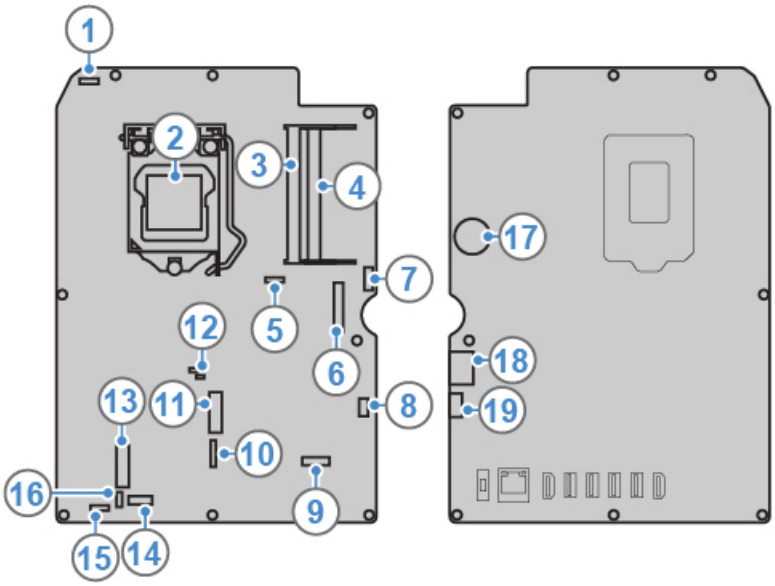

Figure 3. System board

1 Integrated camera connector	2 Microprocessor socket
3 Memory slot 1 (DIMM1)	4 Memory slot 2 (DIMM2)
5 System fan connector	6 LVDS connector
7 Optical drive connector	8 Power button board connector
9 LCD backlight connector	10 IO board connector 3
11 M.2 solid-state drive slot	12 JCRIS1 pads
13 M.2 Wi-Fi card slot	14 I/O board connector 1
15 Internal speaker connector	16 I/O board connector 2
17 Coin-cell battery	18 SATA connector for storage drive
19 Power connector for storage drive	

Machine type and model label

The machine type and model label identifies the computer. When you contact Lenovo for help, the machine type and model information helps support technicians to identify the computer and provide faster service. The machine type and model label is attached on the computer as shown.



Figure 4. Machine type and model label

Adjusting the monitor stand

Note: The monitor stand is optional.

- Adjust the vertical position of the computer between 5° forward and 65° back.

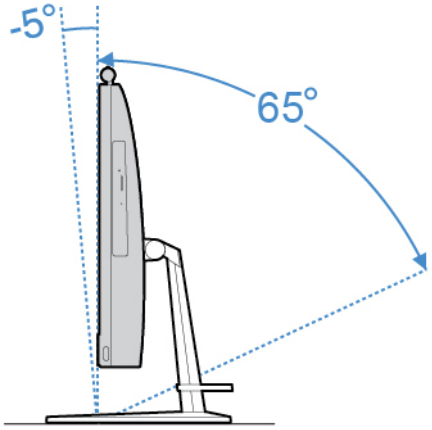

Figure 5. Adjusting the vertical position of the computer between 5° forward and 65° back

- Adjust the angle of the computer between 45° to the left and 45° to the right.

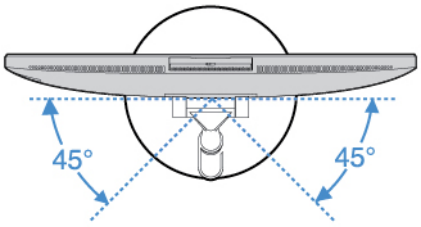

Figure 6. Adjusting the angle of the computer between 45° to the left and 45° to the right

Chapter 2. Specifications

Power supply

- 90-watt automatic voltage-sensing power supply
- 120-watt automatic voltage-sensing power supply

Storage drives

- 2.5-inch storage drive (optional)
- M.2 solid-state drive (optional)

Video features

- HDMI 1.4 in connector
- HDMI 1.4 out connector

Audio features

- The integrated video card supports the following:
  - Headset connector
  - Integrated microphone
  - Internal speaker
- The optional discrete video card provides an enhanced audio experience and extended capabilities.

Input/Output (I/O) features

- Audio connectors (headset connector and integrated microphone connector)
- Card reader slot
- Ethernet connector
- HDMI 1.4 in connector
- HDMI 1.4 out connector
- Headset connector
- USB connectors (USB 2.0 and USB 3.1)

Expansion

- Memory slots
- Optical drive (optional)
- Storage drive bay

Network features

- Ethernet LAN
- Wireless LAN (optional)
- Bluetooth (optional)

Physical dimensions

- For V530-22ICB AIO:
  - Width: 490 mm (19.3 inches)

© Copyright Lenovo 2018, 2019

  - Height: 409 mm (16.1 inches)
  - Depth: 228 mm (9.0 inches)
- For V530-24ICB AIO:
  - Width: 543 mm (21.4 inches)
  - Height: 437 mm (17.2 inches)
  - Depth: 228 mm (9.0 inches)

Weight (without the package)

- For V530-22ICB AIO: Maximum configuration as shipped: 6.1kg (16.3 lb)
- For V530-24ICB AIO: Maximum configuration as shipped: 7.0 kg (18.8 lb)

Statement on USB transfer rate

Depending on many factors such as the processing capability of the host and peripheral devices, file attributes, and other factors related to system configuration and operating environments, the actual transfer rate using the various USB connectors on this device will vary and will be slower than the data rate listed below for each corresponding device.

USB device	Data rate (Gbit/s)
3.1 Gen 1	5
3.1 Gen 2	10
3.2	20

Chapter 3. Computer locks

This chapter provides instructions on how to lock your computer with the locking devices to keep your computer safe.

Attaching a Kensington-style cable lock

You can use a Kensington-style cable lock to secure your computer to a desk, table, or other nonpermanent fixture. The cable lock connects to the security-lock slot at the rear of your computer. Depending on the type selected, the cable lock can be operated with a key or combination. The cable lock also locks the buttons used to open the computer cover. This is the same type of lock used with many notebook computers. You can order such a cable lock directly from Lenovo by searching for *Kensington* at:
http://www.lenovo.com/support

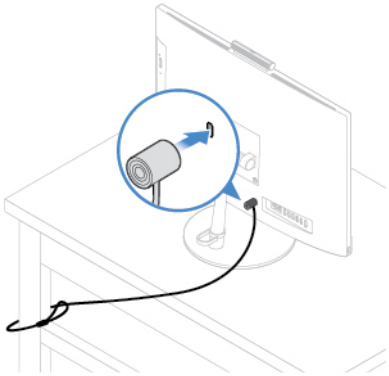

Figure 7. Attaching a Kensington-style cable lock

© Copyright Lenovo 2018, 2019

Chapter 4. Replacing hardware

This chapter provides instructions on how to replace hardware for your computer.

Before replacing hardware

Attention: Do not open your computer or attempt any repairs before reading this section and the *Important Product Information Guide*.

Notes before replacing hardware

- Use computer components provided only by Lenovo.
- When installing or replacing an option, use the appropriate instructions explained in this manual along with the instructions that come with the option.
- In most areas of the world, Lenovo requires the return of defective CRUs. Information about this will come with the CRU or will come a few days after the CRU arrives.

Handling static-sensitive devices

Do not open the static-protective package containing the new part until the defective part has been removed and you are ready to install the new part. Static electricity, although harmless to you, can seriously damage computer components and options.

When you handle options and other computer components, take these precautions to avoid static-electricity damage:

- Limit your movement. Movement can cause static electricity to build up around you.
- Always handle options and other computer components carefully. Handle PCI/PCIe cards, memory modules, system boards, and microprocessors by the edges. Never touch any exposed circuitry.
- Prevent others from touching the options and other computer components.
- Touch the static-protective package containing the part to a metal expansion-slot cover or other unpainted metal surface on the computer for at least two seconds. This reduces static electricity from the package and your body before you install or replace a new part.
- When possible, remove the new part from the static-protective package, and install it directly in the computer without setting the part down. When this is not possible, place the static-protective package on a smooth, level surface and place the part on the package.
- Do not place the part on the computer cover or other metal surface.

Knowing FRUs (including CRUs)

- Field Replaceable Units (FRUs) are computer parts that a trained technician can upgrade or replace. FRUs include all CRUs. For detailed FRU information, such as the FRU part numbers and supported computer models, go to:
  http://www.lenovo.com/serviceparts-lookup
- Customer Replaceable Units (CRUs) are computer parts that a user can upgrade or replace.
  - Self-service CRUs: You can install self-service CRUs easily. These CRUs might be stand-alone, latched, or secured by up to two screws. Examples of self-service CRUs include the keyboard, mouse, any USB device. You are responsible for replacing all self-service CRUs.
  - Optional-service CRUs: Handling optional-service CRUs requires some technical skills and simple tools (such as a screwdriver). These CRUs are isolated parts within the computer. They are usually

© Copyright Lenovo 2018, 2019

concealed by an access panel that is secured by more than two screws. You must remove the screws and panel to access the specific CRU. Optional-service CRUs can be removed and installed by users or, during the warranty period, by a Lenovo service technician.

Before replacing FRUs

Before replacing any FRU, read the following:

- Only certified and trained personnel can service the computer.
- Before replacing an FRU, read the entire section about replacing the part.
- Be extremely careful during writing operations such as copying, saving, or formatting.

  The sequence of the drives in the computer that you are servicing might have been altered. If you select an incorrect drive, data or programs might be overwritten.
- Replace an FRU only with another FRU of the correct model.

  When you replace an FRU, ensure that the model of the machine and the FRU part number are correct.
- An FRU should not be replaced because of a single, unreproducible failure.

  Single failures can occur for a variety of reasons that have nothing to do with a hardware defect, such as cosmic radiation, electrostatic discharge, or software errors. Consider replacing an FRU only when a problem recurs. If you suspect that an FRU is defective, clear the error log and run the test again. If the error does not recur, do not replace the FRU.
- Only replace a defective FRU.

Locating FRUs (including CRUs)

Notes:

- Some of the components are optional.
- To replace a component that is not in the list below, contact a Lenovo service technician. For a list of Lenovo Support phone numbers, go to:
  http://www.lenovo.com/support/phone

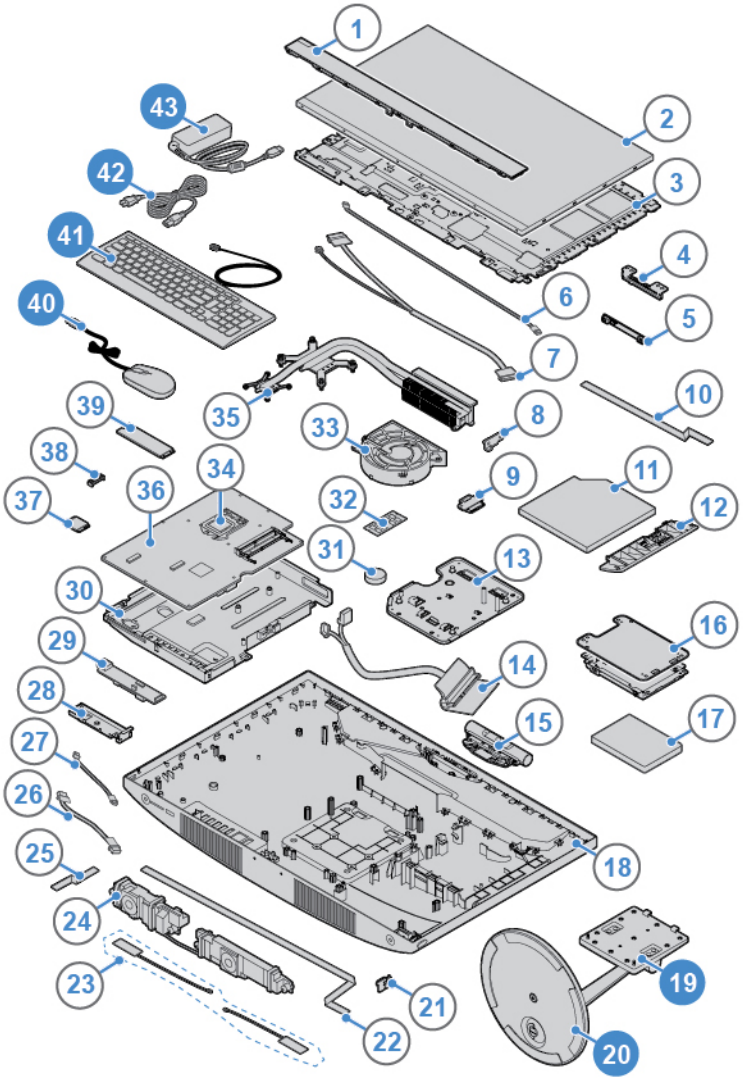

Figure 8. Locating FRUs (including CRUs)

Self-service CRUs	**Non-CRUs**
19 Monitor stand	1 LCD front decorative cover
20 Monitor stand base	2 LCD panel
40 Mouse	3 LCD bracket
41 Keyboard	4 Integrated microphone bracket
42 Power cord	5 Integrated microphone
43 Power adapter	6 LCD backlight cable
	7 LVDS cable
	8 Optical drive bracket
	9 Optical drive holder
	10 Optical drive cable
	11 Optical drive

Self-service CRUs	Non-CRUs
	12 Optical drive bezel
	13 VESA mount bracket
	14 Storage drive cable
	15 Integrated camera
	16 Storage drive bracket
	17 Storage drive
	18 Computer cover
	21 Power button board
	22 Power button board cable
	23 Wi-Fi antennas
	24 Internal speakers
	25 I/O board cable 1
	26 I/O board cable 3
	27 I/O board cable 2
	28 I/O board bracket
	29 I/O board
	30 System board frame
	31 Coin-cell battery
	32 Memory module
	33 System fan
	34 Microprocessor
	35 Heat sink
	36 System board
	37 Wi-Fi card
	38 Wi-Fi card shield
	39 M.2 solid-state drive

Replacing the keyboard or wireless keyboard

Note: The wireless keyboard is available only on some models.

Replacing the keyboard

1. Turn off the computer and disconnect all power cords from electrical outlets.
2. Disconnect the old keyboard cable from the computer.
3. Connect a new keyboard to the appropriate connector on the computer.

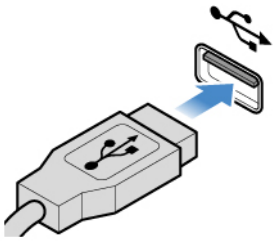

Figure 9. Replacing the keyboard

Replacing the wireless keyboard

1. Remove your old wireless keyboard.
2. Take out the new wireless keyboard from the package.
3. Open the battery compartment cover, and install two AAA batteries according to the polarity indicators.

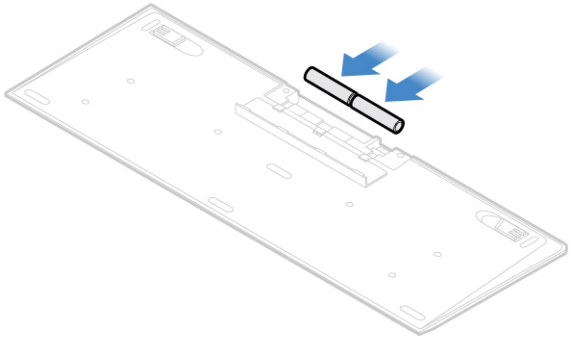

Figure 10. Replacing the wireless keyboard

4. Remove the USB dongle from the keyboard compartment or from the wireless mouse compartment and connect it to an available USB connector on the computer.
5. Close the compartment cover. The keyboard is ready for use.

Replacing the mouse or wireless mouse

Note: The wireless mouse is available only on some models.

Replacing the mouse

1. Turn off the computer and disconnect all power cords from electrical outlets.
2. Disconnect the old mouse cable from the computer.
3. Connect a new mouse to the appropriate connector on the computer.

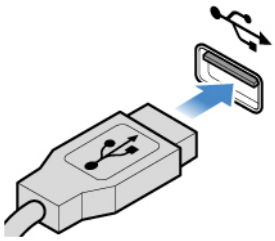

Figure 11. Replacing the mouse

Replacing the wireless mouse

1. Disconnect the USB dongle from your computer. Then, remove your old wireless mouse.
2. Remove the new wireless mouse from the package.
3. Open the battery compartment cover, and install two AAA batteries according to the polarity indicators.

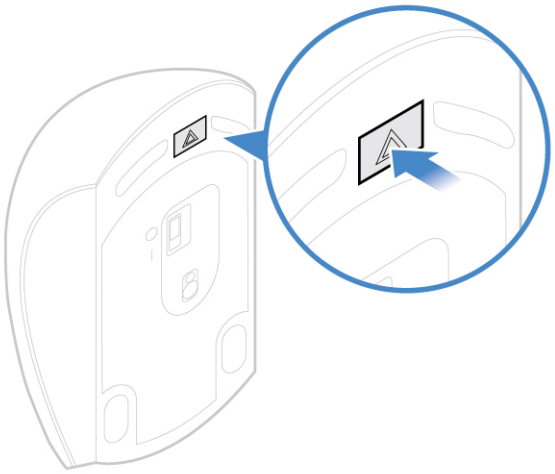

Figure 12. Opening the battery compartment



Figure 13. Taking out the USB dongle

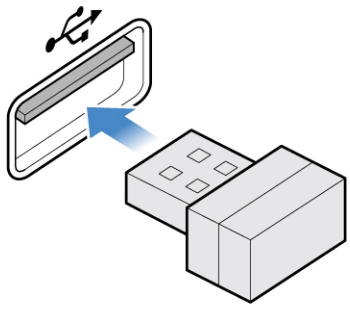

Figure 14. Connecting the USB dongle to a USB connector

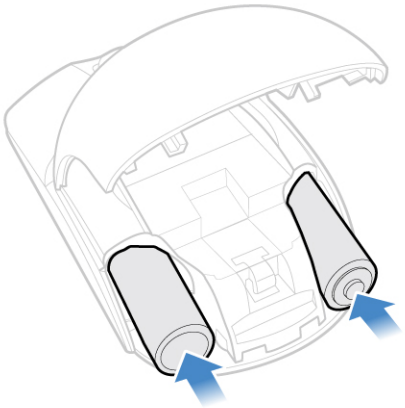

Figure 15. Installing the mouse batteries

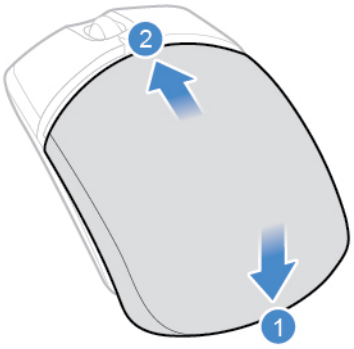

Figure 16. Closing the battery compartment cover

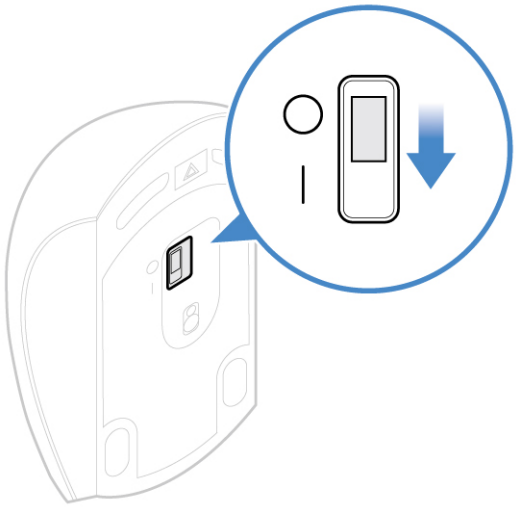

Figure 17. Pushing the power switch to the on position

Notes:

- The green LED indicates that the mouse is ready for use.
- The flashing amber LED indicates a low battery level.
- Push the power switch to the off position when you are not using the mouse to extend the battery life.
- After disconnecting the USB dongle from your computer, store it in the wireless mouse compartment or in the wireless keyboard compartment.

Replacing the power adapter

Attention: Do not open your computer or attempt any repairs before reading the *Important Product Information Guide*.

1. Remove any media from the drives and turn off all connected devices and the computer.
2. Disconnect all power cords from electrical outlets and disconnect all cables that are connected to the computer.
3. Replace the power adapter.

   Note: Your power adapter might look different from the one illustrated.

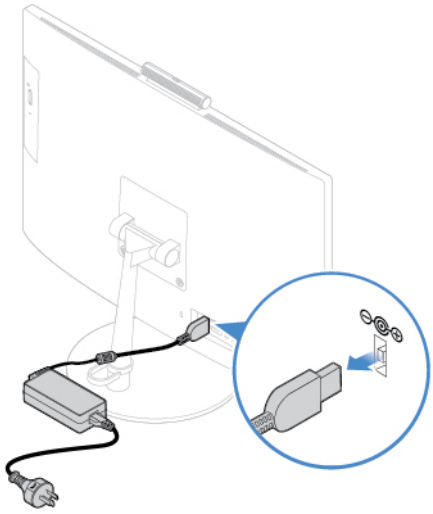

Figure 18. Removing the power adapter

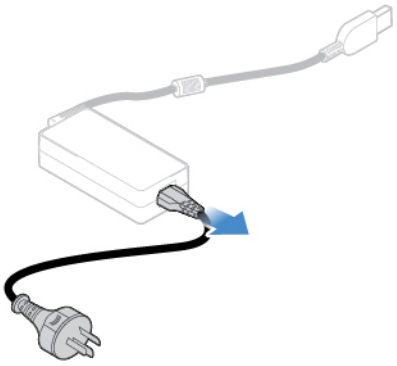

Figure 19. Removing the power cord

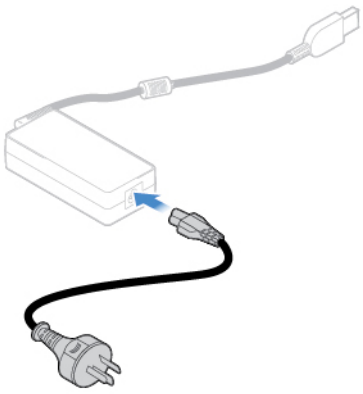

Figure 20. Installing the power cord

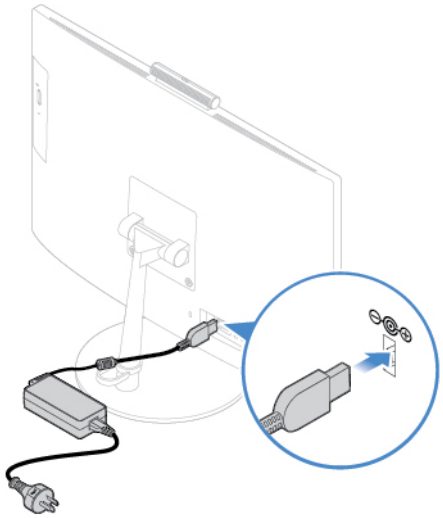

Figure 21. Installing the power adapter

Replacing the monitor stand

Attention: Do not open your computer or attempt any repairs before reading the *Important Product Information Guide*.

1. Remove any media from the drives and turn off all connected devices and the computer.
2. Disconnect all power cords from electrical outlets and disconnect all cables that are connected to the computer.
3. Place a soft, clean towel or cloth on the desk or surface. Hold the sides of your computer and gently lay it down so that the screen is against the surface and the computer cover is facing up.
4. Replace the monitor stand.

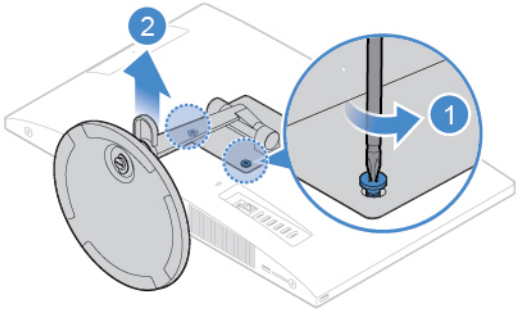

Figure 22. Removing the monitor stand

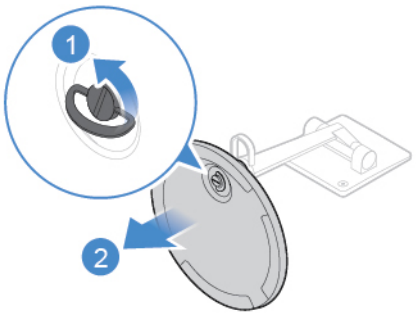

Figure 23. Removing the monitor stand base

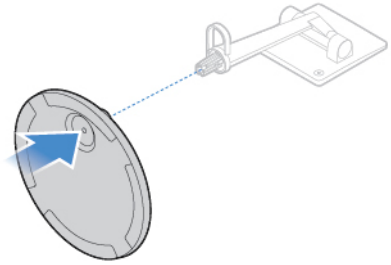

Figure 24. Installing the monitor stand base

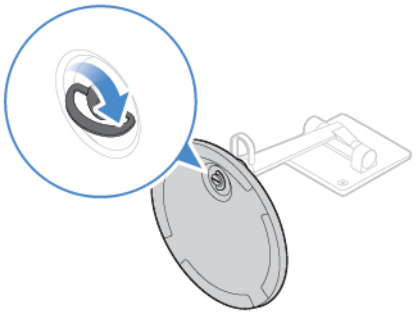

Figure 25. Securing the monitor stand base to the monitor stand

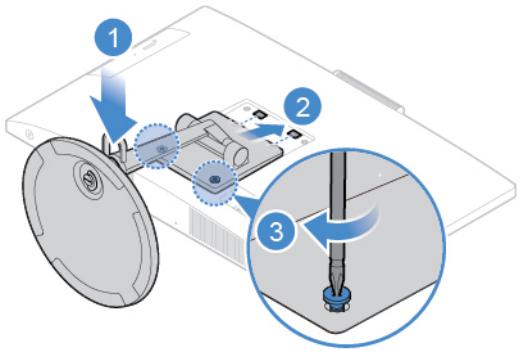

Figure 26. Installing the monitor stand

Removing the LCD panel

Attention: Do not open your computer or attempt any repairs before reading the *Important Product Information Guide*.

CAUTION:

Before you open the LCD panel, turn off the computer and wait several minutes until the computer is cool.

1. Remove any media from the drives and turn off all connected devices and the computer.
2. Disconnect all power cords from electrical outlets and disconnect all cables that are connected to the computer.
3. Remove the monitor stand. See “Replacing the monitor stand” on page 20.
4. Remove the LCD panel.

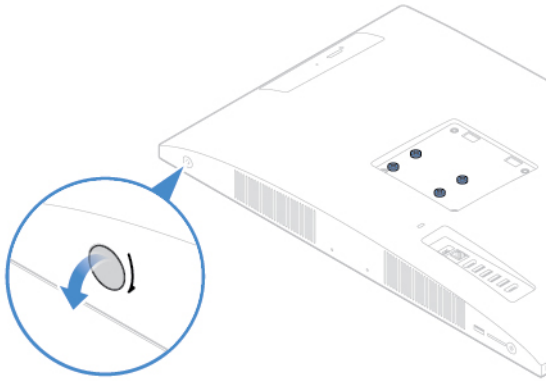

Figure 27. Pulling out the LCD panel screw cap

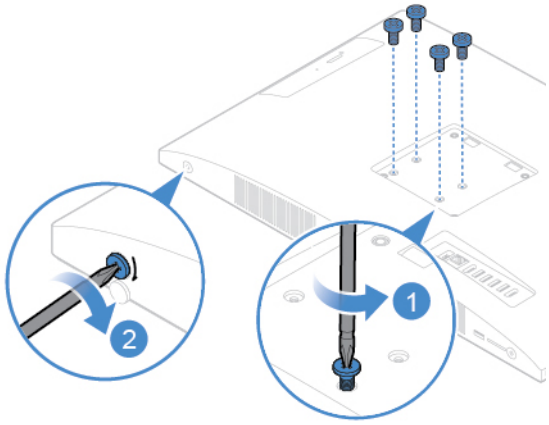

Figure 28. Removing or loosening the screws

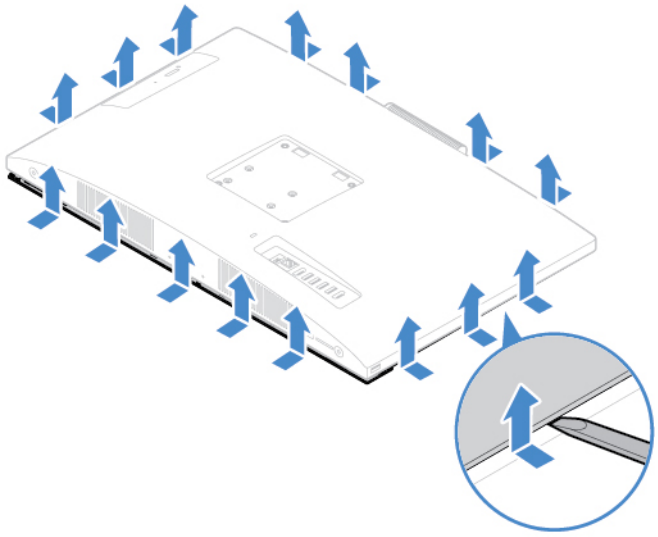

Figure 29. Insert a plastic tab to release the clips

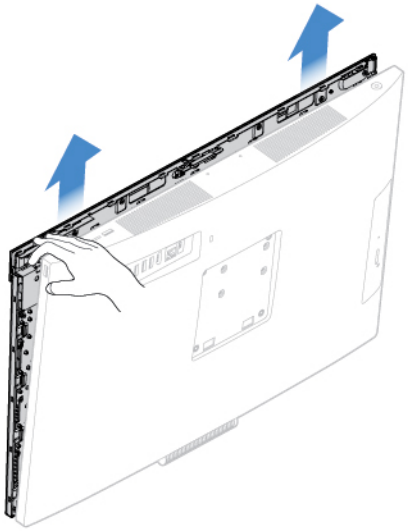

Figure 30. Removing the LCD panel from the computer

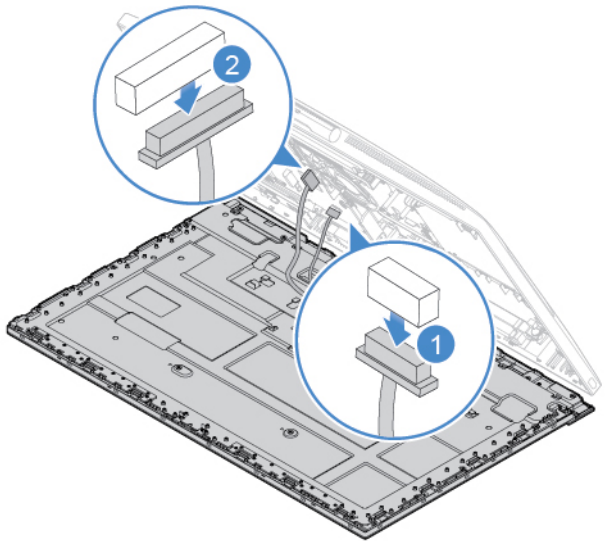

Figure 31. Disconnecting the LCD cables from the system board

Replacing the LCD front decorative cover

Attention: Do not open your computer or attempt any repairs before reading the *Important Product Information Guide*.

1. Remove the monitor stand. See “Replacing the monitor stand” on page 20.
2. Remove the LCD panel. See “Removing the LCD panel” on page 22.
3. Remove the screws that secure the LCD front decorative cover to remove the cover.

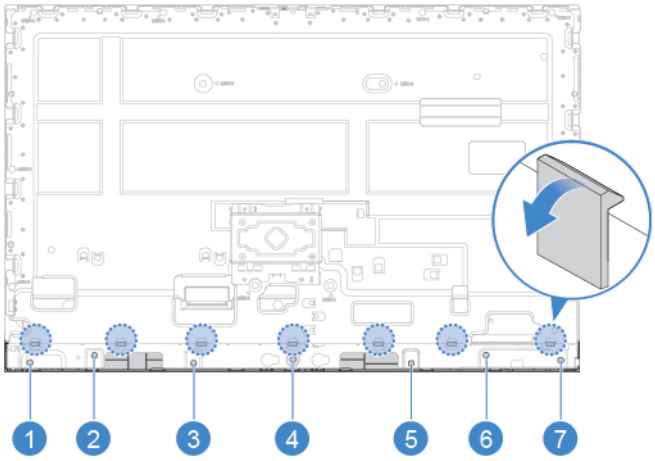

Figure 32. Removing the screws that secure the LCD front decorative cover

4. Install the screws to secure the new LCD front decorative cover to the LCD panel.
5. Complete the replacement. See “Completing the parts replacement” on page 58.

Replacing the integrated microphone

Attention: Do not open your computer or attempt any repairs before reading the *Important Product Information Guide*.

1. Remove the monitor stand. See “Replacing the monitor stand” on page 20.
2. Remove the LCD panel. See “Removing the LCD panel” on page 22.
3. Disconnect the integrated microphone cable from the LCD panel.
4. Replace the integrated microphone.

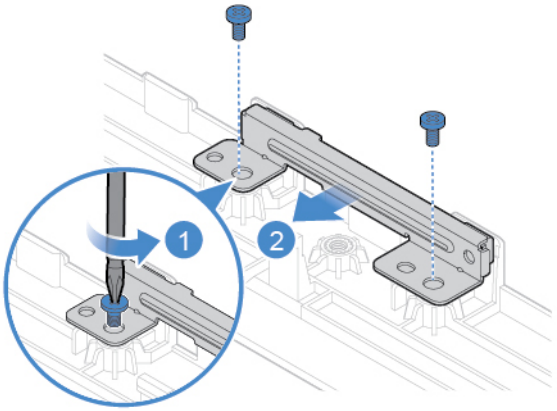

Figure 33. Removing the integrated microphone

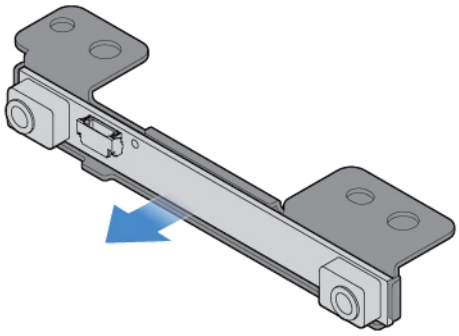

Figure 34. Removing the integrated microphone bracket

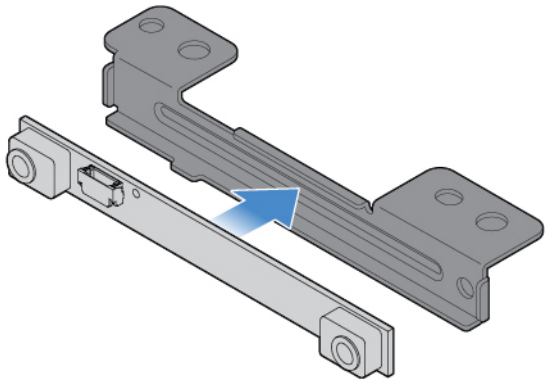

Figure 35. Installing the integrated microphone bracket

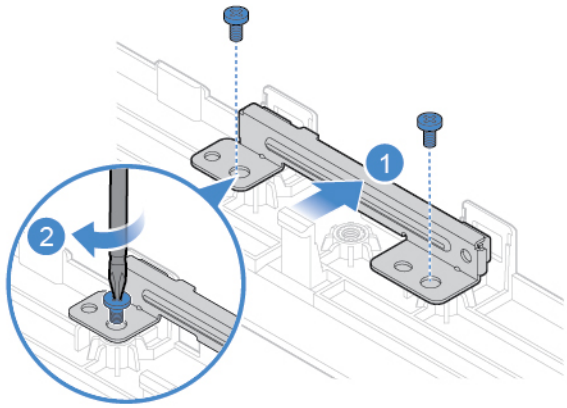

Figure 36. Installing the integrated microphone

5. Connect the integrated microphone cable to the LCD panel.
6. Complete the replacement. See “Completing the parts replacement” on page 58.

Replacing the LCD bracket

Attention: Do not open your computer or attempt any repairs before reading the *Important Product Information Guide*.

1. Remove the monitor stand. See “Replacing the monitor stand” on page 20.
2. Remove the LCD panel. See “Removing the LCD panel” on page 22.
3. Remove the LCD front decorative cover. See “Replacing the LCD front decorative cover” on page 24.
4. Remove the integrated microphone. See “Replacing the integrated microphone” on page 25.
5. Disconnect the LCD cables from the LCD panel.
6. Remove the screws that secure the LCD bracket.

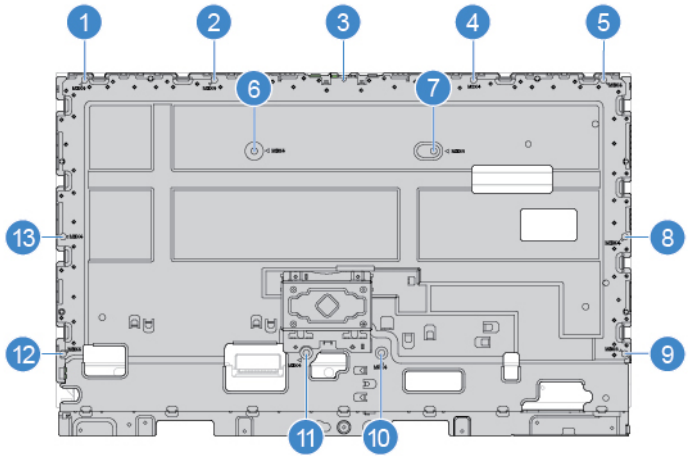

Figure 37. Removing the LCD bracket screws

7. Install the screws to secure the new LCD bracket to the LCD panel.
8. Connect the LCD cables to the LCD panel.
9. Complete the replacement. See “Completing the parts replacement” on page 58.

Replacing the integrated camera

Attention: Do not open your computer or attempt any repairs before reading the *Important Product Information Guide*.

1. Remove the monitor stand. See “Replacing the monitor stand” on page 20.
2. Remove the LCD panel. See “Removing the LCD panel” on page 22.
3. Disconnect the integrated camera cable from the system board.
4. Replace the integrated camera.

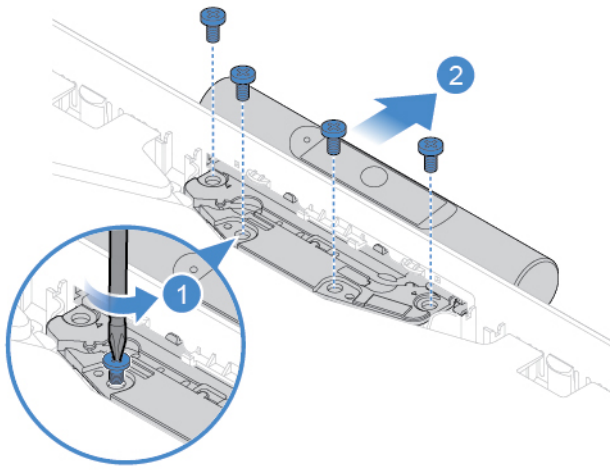

Figure 38. Removing the integrated camera

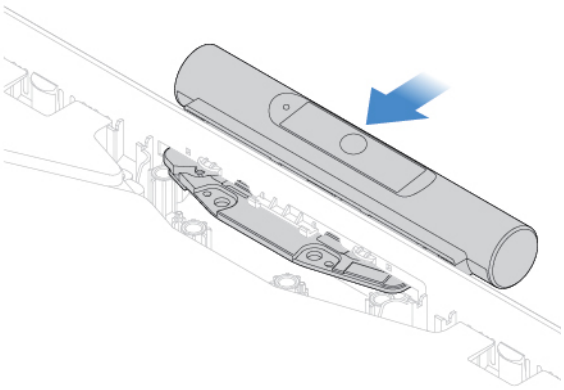

Figure 39. Installing the integrated camera

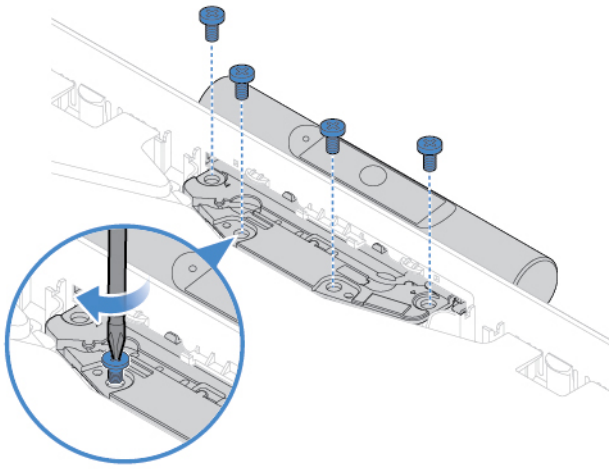

Figure 40. Installing the screws to secure the integrated camera

5. Connect the integrated camera cable to the system board.
6. Complete the replacement. See “Completing the parts replacement” on page 58.

Replacing the optical drive

Attention: Do not open your computer or attempt any repairs before reading the *Important Product Information Guide*.

1. Remove the monitor stand. See “Replacing the monitor stand” on page 20.
2. Remove the LCD panel. See “Removing the LCD panel” on page 22.
3. Replace the optical drive.

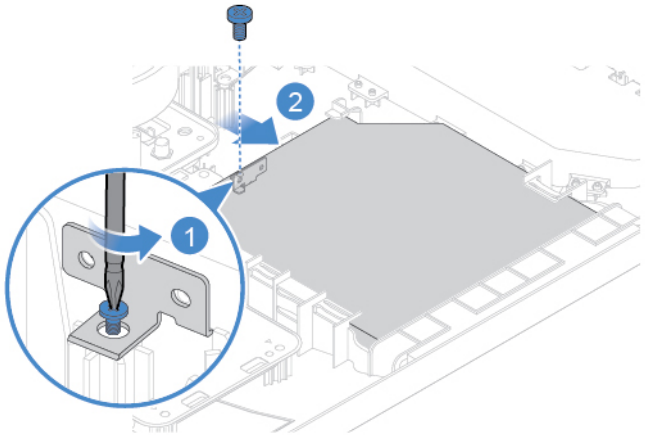

Figure 41. Removing the optical drive

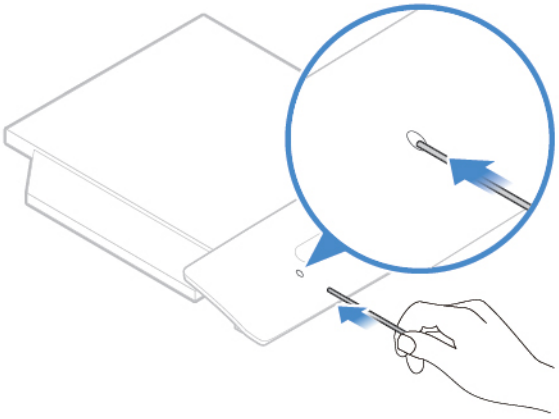

Figure 42. Inserting a stick with one pointed end to the drive hole

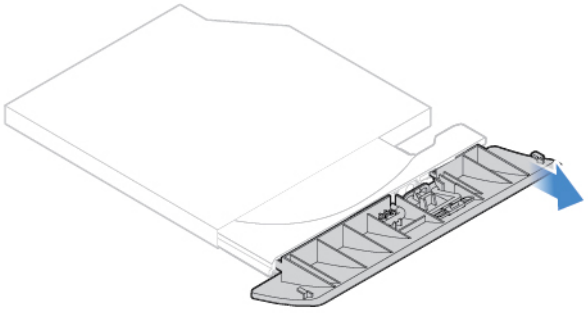

Figure 43. Pulling out one end of the optical drive bezel

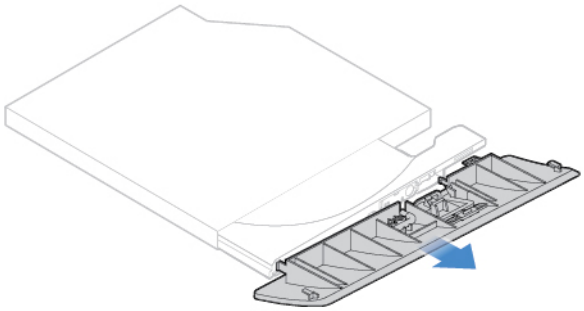

Figure 44. Pulling out the optical drive bezel

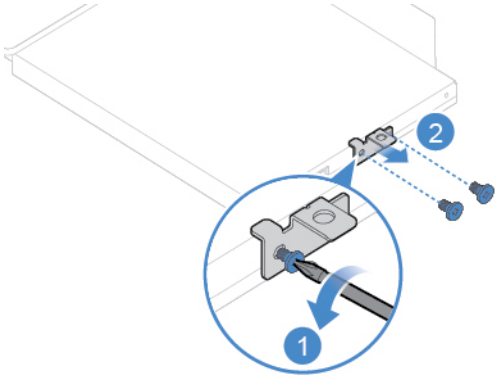

Figure 45. Removing the optical drive bracket

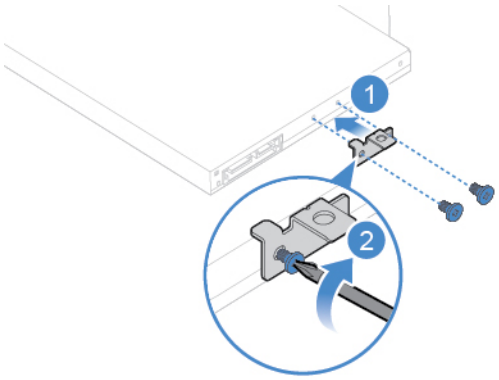

Figure 46. Installing the optical drive bracket

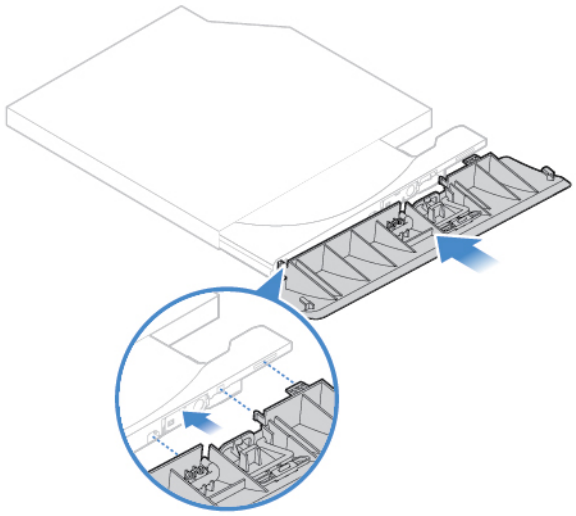

Figure 47. Aligning the plastic tabs in the optical drive bezel with the holes in the optical drive

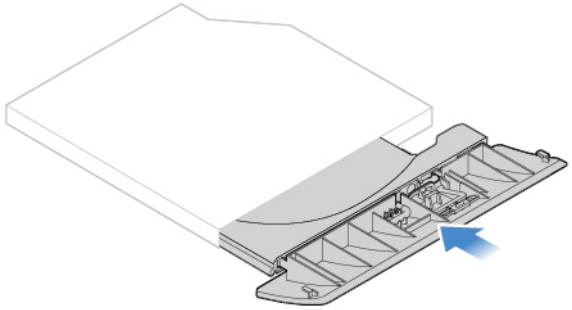

Figure 48. Installing the optical drive bezel

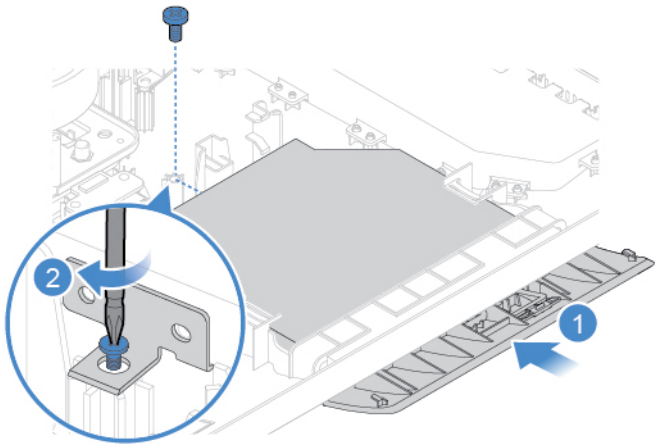

Figure 49. Installing the optical drive

4. Complete the replacement. See “Completing the parts replacement” on page 58.

Replacing the optical drive holder

Attention: Do not open your computer or attempt any repairs before reading the *Important Product Information Guide*.

1. Remove the monitor stand. See “Replacing the monitor stand” on page 20.
2. Remove the LCD panel. See “Removing the LCD panel” on page 22.
3. Disconnect the optical drive cable from the optical drive holder.
4. Replace the optical drive holder.

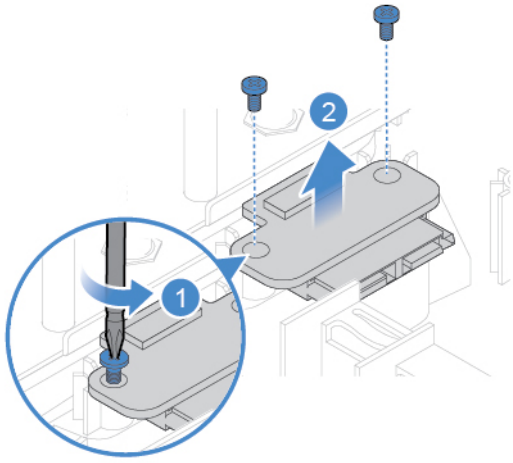

Figure 50. Removing the optical drive holder

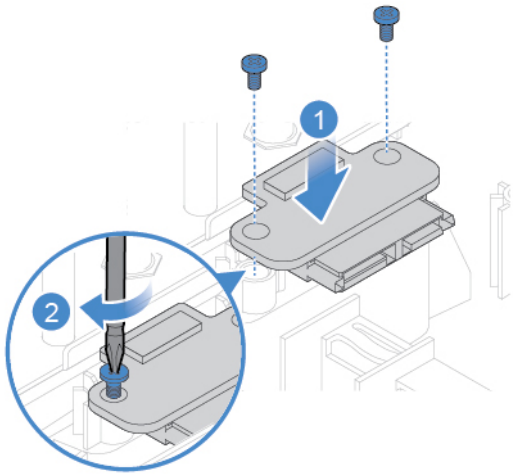

Figure 51. Installing the optical drive holder

5. Connect the optical drive cable to the new optical drive holder.
6. Complete the replacement. See “Completing the parts replacement” on page 58.

Replacing the storage drive

Attention: Do not open your computer or attempt any repairs before reading the *Important Product Information Guide*.

1. Remove the monitor stand. See “Replacing the monitor stand” on page 20.
2. Remove the LCD panel. See “Removing the LCD panel” on page 22.
3. Disconnect the storage drive cable from the system board.
4. Replace the storage drive.

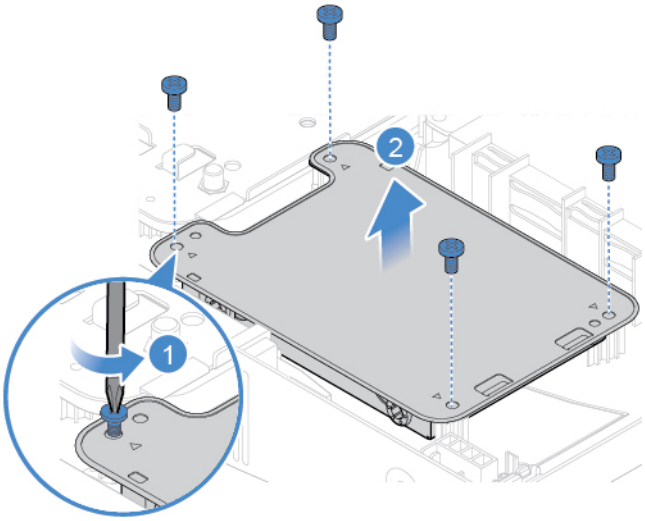

Figure 52. Removing the storage drive bracket

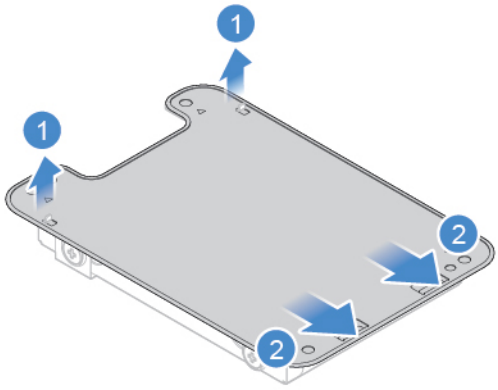

Figure 53. Removing the storage drive bracket shield

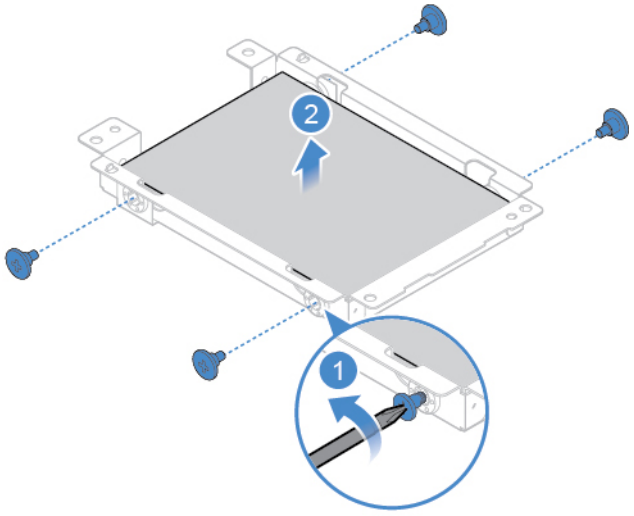

Figure 54. Removing the storage drive

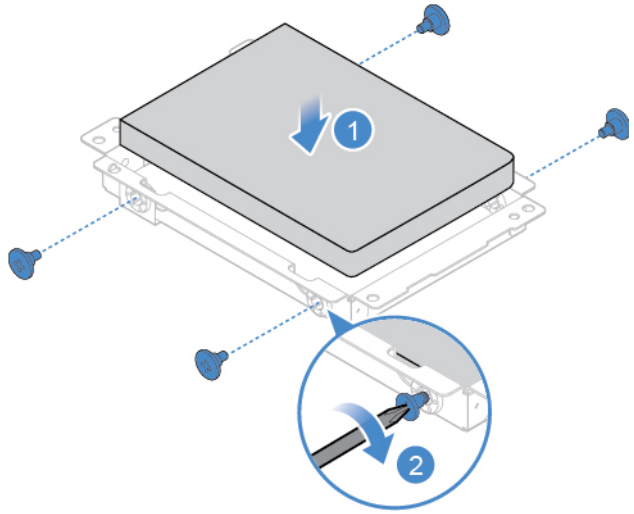

Figure 55. Installing the storage drive

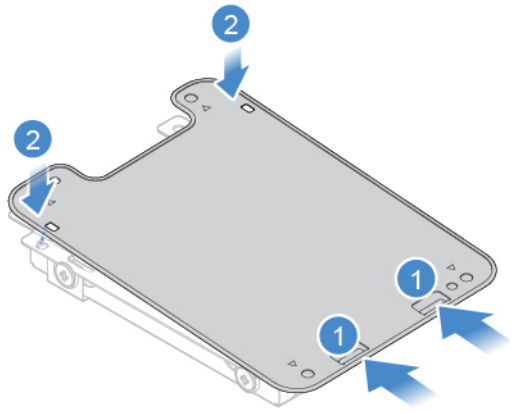

Figure 56. Installing the storage drive bracket shield

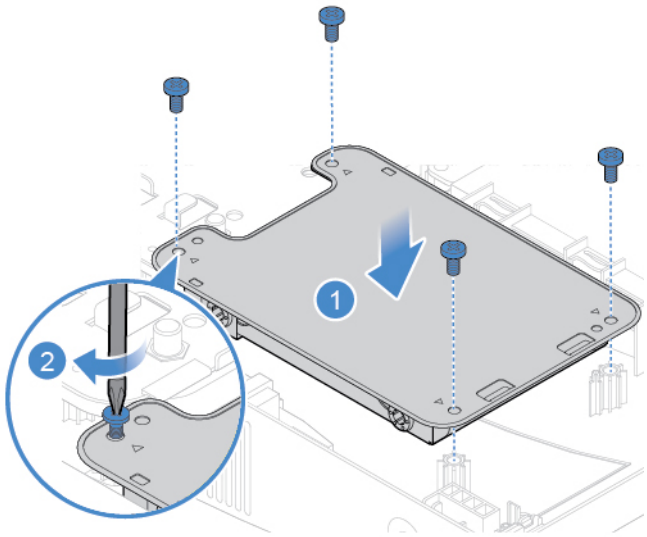

Figure 57. Installing the storage drive

5. Connect the storage drive cable to the system board.
6. Complete the replacement. See “Completing the parts replacement” on page 58.

Replacing the power button board

Attention: Do not open your computer or attempt any repairs before reading the *Important Product Information Guide*.

1. Remove the monitor stand. See “Replacing the monitor stand” on page 20.
2. Remove the LCD panel. See “Removing the LCD panel” on page 22.
3. Remove the storage drive. See “Replacing the storage drive” on page 32.
4. Disconnect the power button board cable from the system board.
5. Replace the power button board.

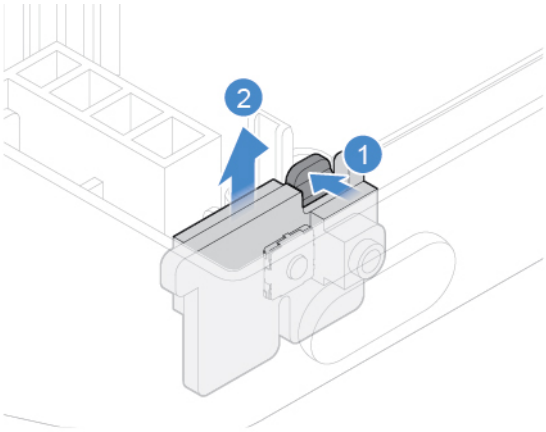

Figure 58. Removing the power button board

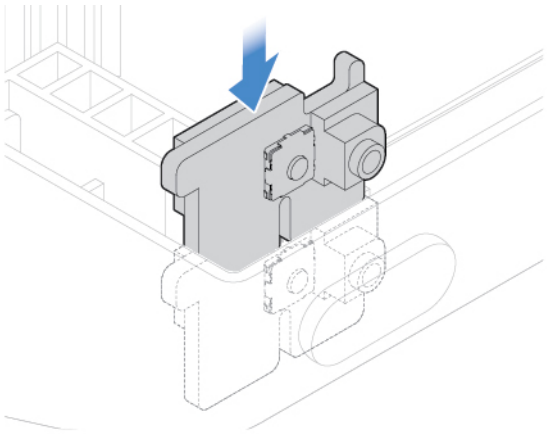

Figure 59. Installing the power button board

6. Connect the power button board cable to the system board.
7. Complete the replacement. See “Completing the parts replacement” on page 58.

Replacing the internal speaker

Attention: Do not open your computer or attempt any repairs before reading the *Important Product Information Guide*.

1. Remove the monitor stand. See “Replacing the monitor stand” on page 20.
2. Remove the LCD panel. See “Removing the LCD panel” on page 22.
3. Disconnect the internal speaker cable from the system board.
4. Replace the internal speaker.

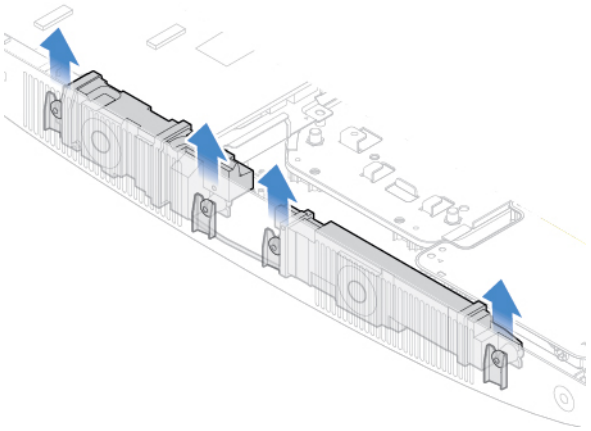

Figure 60. Removing the internal speaker

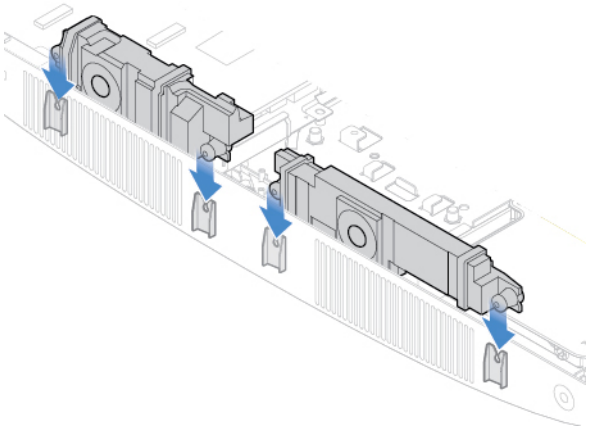

Figure 61. Installing the internal speaker

5. Connect the internal speaker cable to the system board.
6. Complete the replacement. See “Completing the parts replacement” on page 58.

Replacing the I/O board

Attention: Do not open your computer or attempt any repairs before reading the *Important Product Information Guide*.

1. Remove the monitor stand. See “Replacing the monitor stand” on page 20.
2. Remove the LCD panel. See “Removing the LCD panel” on page 22.
3. Disconnect the I/O board cables from the system board.
4. Replace the I/O board.

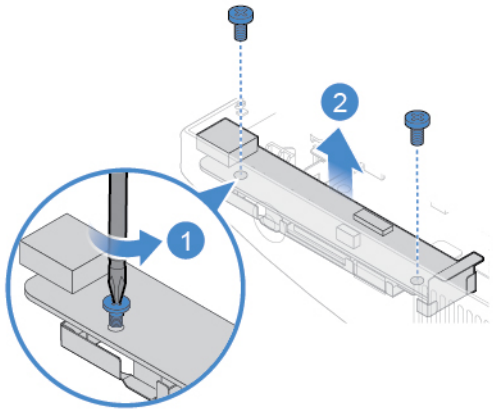

Figure 62. Removing the I/O board bracket

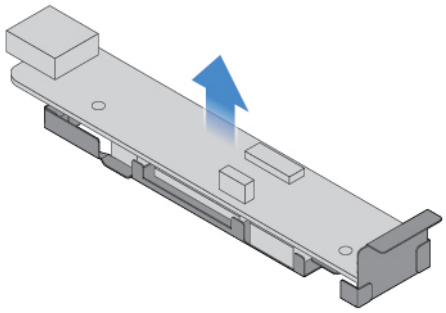

Figure 63. Removing the I/O board

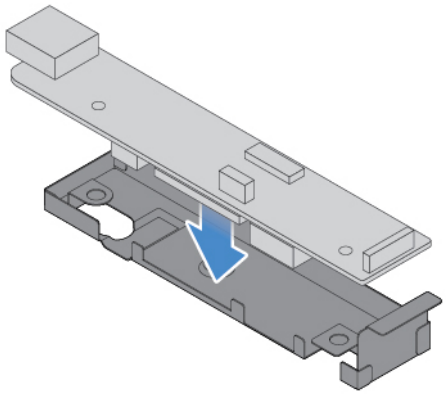

Figure 64. Installing the I/O board

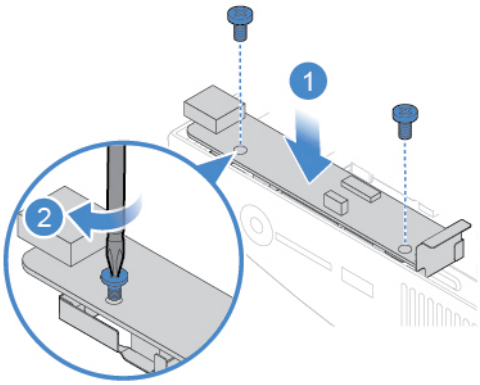

Figure 65. Installing the I/O board bracket

5. Connect the I/O board cables to the system board.
6. Complete the replacement. See “Completing the parts replacement” on page 58.

Replacing the system fan

Attention: Do not open your computer or attempt any repairs before reading the *Important Product Information Guide*.

1. Remove the monitor stand. See “Replacing the monitor stand” on page 20.
2. Remove the LCD panel. See “Removing the LCD panel” on page 22.

3. Disconnect the system fan cable from the system board.
4. Replace the system fan.

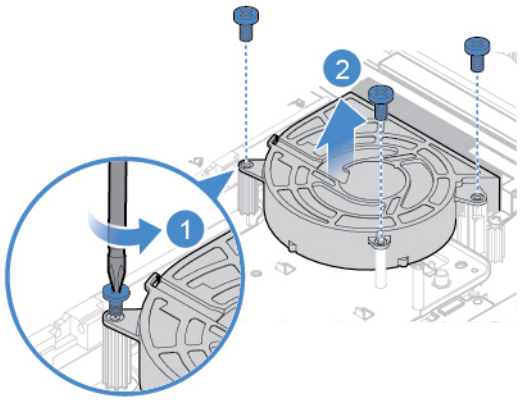

Figure 66. Removing the system fan

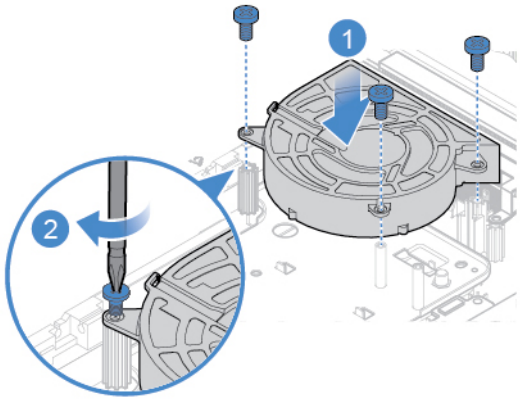

Figure 67. Installing the system fan

5. Connect the system fan cable to the system board.
6. Complete the replacement. See “Completing the parts replacement” on page 58.

Replacing the heat sink

Attention: Do not open your computer or attempt any repairs before reading the *Important Product Information Guide*.

1. Remove the monitor stand. See “Replacing the monitor stand” on page 20.
2. Remove the LCD panel. See “Removing the LCD panel” on page 22.
3. Depending on the computer model, refer to one of the following to replace the heat sink.
   - Type 1

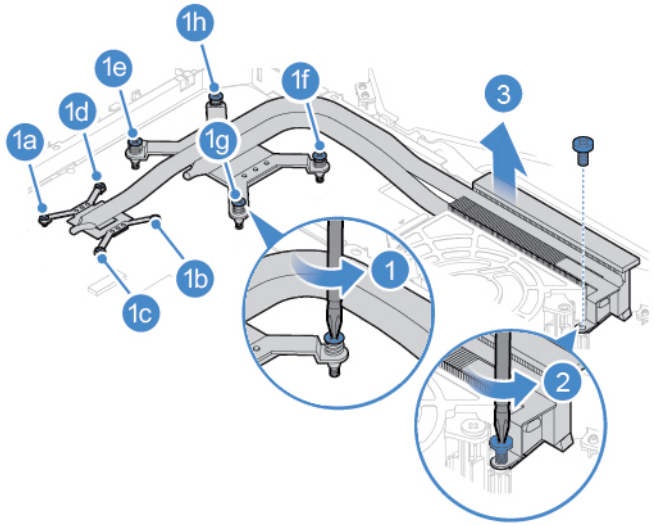

Figure 68. Removing the heat sink

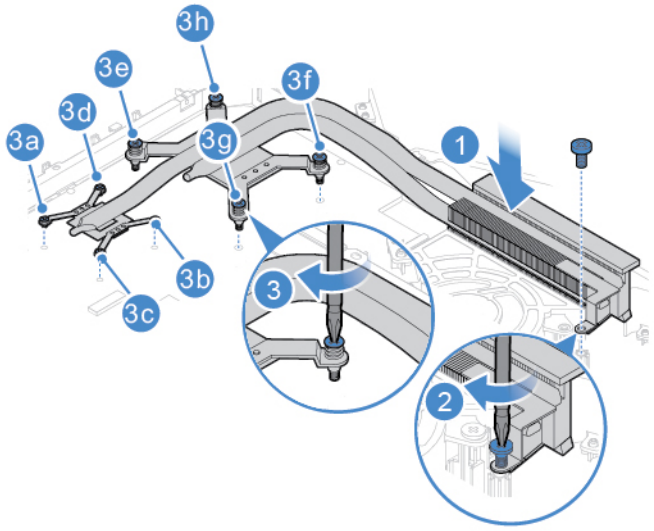

Figure 69. Installing the heat sink

- Type 2

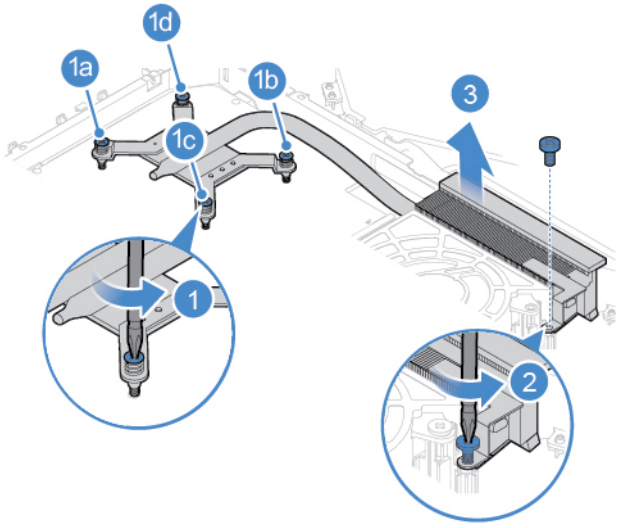

Figure 70. Removing the heat sink

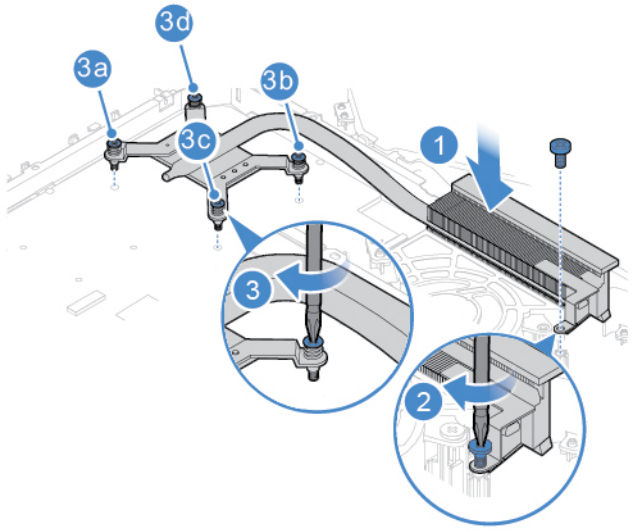

Figure 71. Installing the heat sink

4. Complete the replacement. See “Completing the parts replacement” on page 58.

Replacing the memory module

Attention: Do not open your computer or attempt any repairs before reading the *Important Product Information Guide*.

If your computer supports one memory module, install the module into the DIMM 1 slot. If your computer supports two memory modules, install one memory module into the DIMM 1 slot first and then install the other into the DIMM 2 slot.

1. Remove the monitor stand. See “Replacing the monitor stand” on page 20.
2. Remove the LCD panel. See “Removing the LCD panel” on page 22.
3. Replace the memory module.

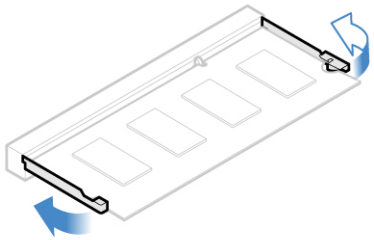

Figure 72. Opening the memory module retainer

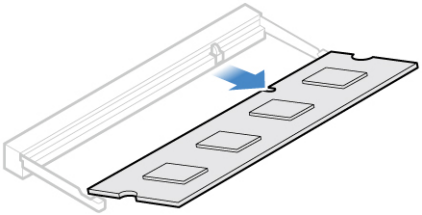

Figure 73. Removing the memory module

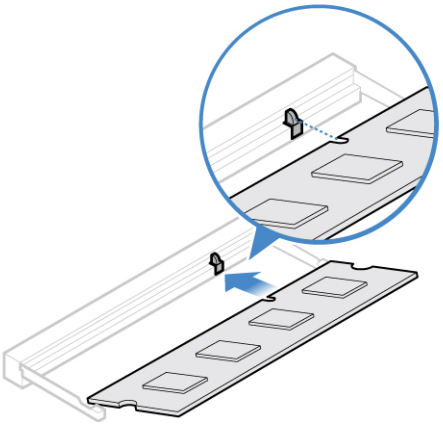

Figure 74. Installing the memory module

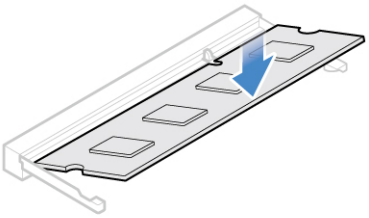

Figure 75. Closing the memory module retainer

4. Complete the replacement. See “Completing the parts replacement” on page 58.

Replacing the M.2 solid-state drive

Attention: Do not open your computer or attempt any repairs before reading the *Important Product Information Guide*.

1. Remove the monitor stand. See “Replacing the monitor stand” on page 20.
2. Remove the LCD panel. See “Removing the LCD panel” on page 22.
3. Depending on the computer model, refer to one of the following to replace the M.2 solid-state drive.
   - Type 1

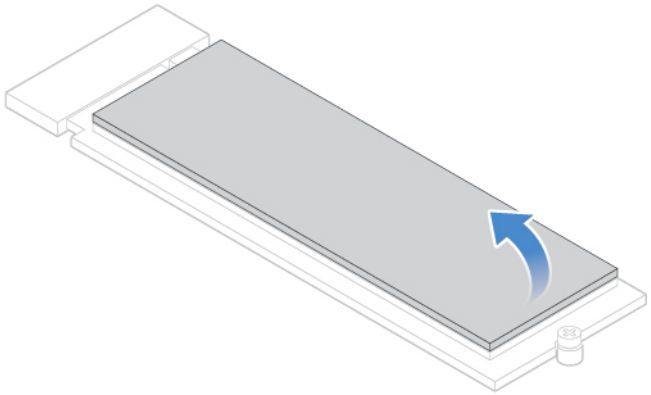

Figure 76. Peeling off the tape from the M.2 solid-state drive

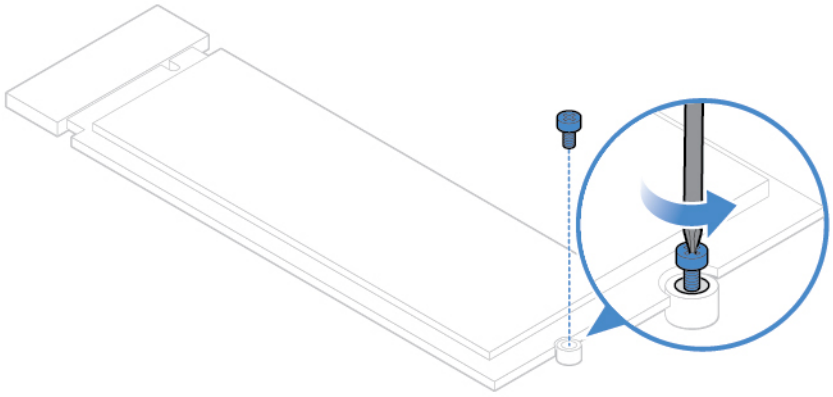

Figure 77. Removing the screw

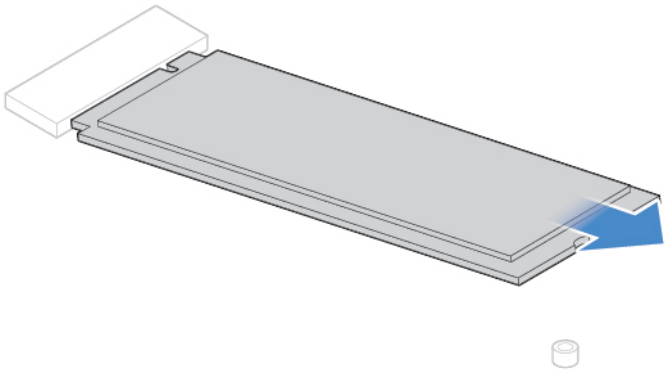

Figure 78. Removing the M.2 solid-state drive

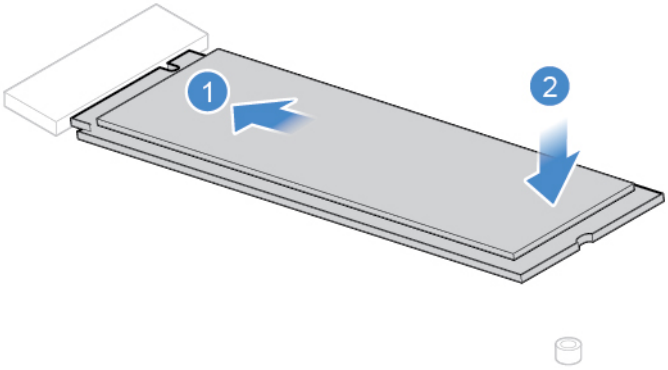

Figure 79. Installing the M.2 solid-state drive

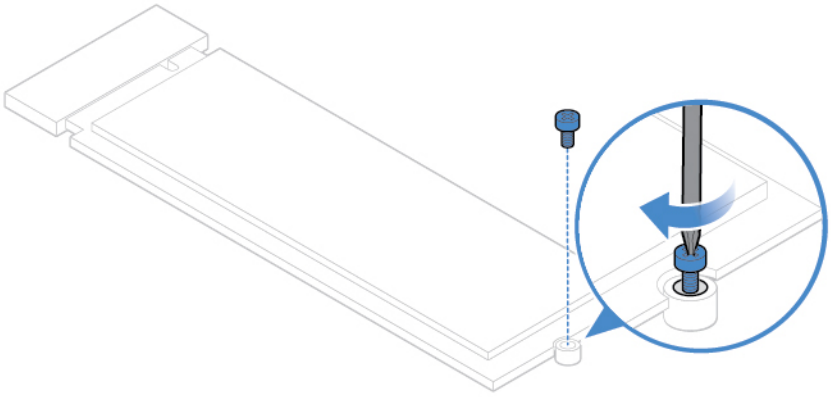

Figure 80. Installing the screw

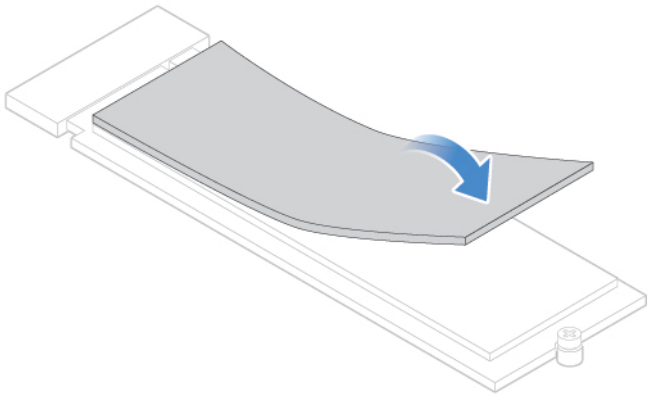

Figure 81. Sticking the tape to the new M.2 solid-state drive

- Type 2

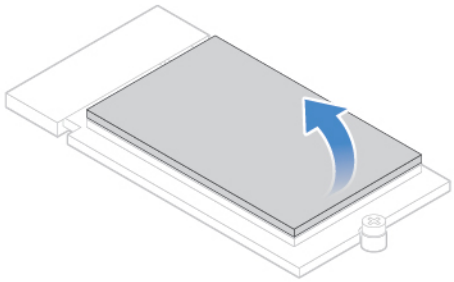

Figure 82. Peeling off the tape from the M.2 solid-state drive

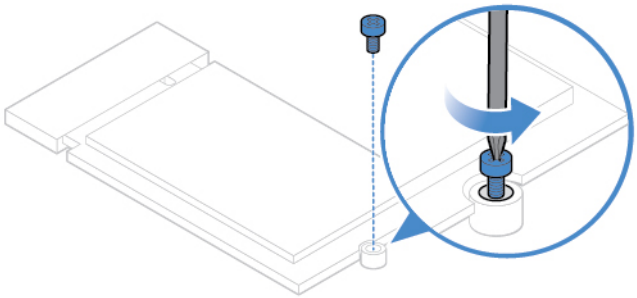

Figure 83. Removing the screw

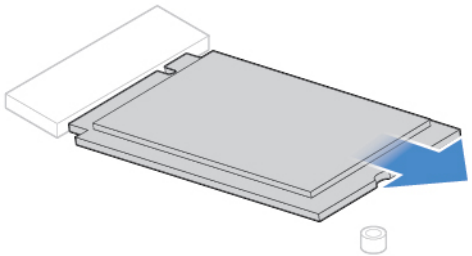

Figure 84. Removing the M.2 solid-state drive

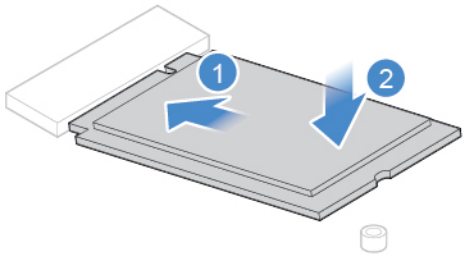

Figure 85. Installing the M.2 solid-state drive

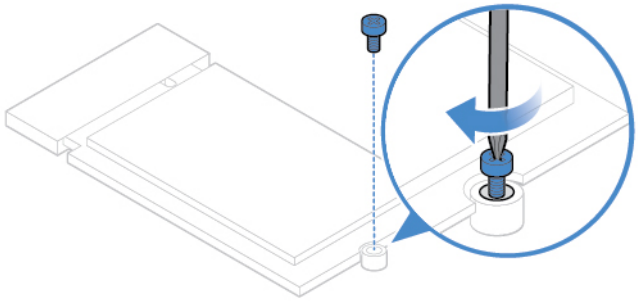

Figure 86. Installing the screw

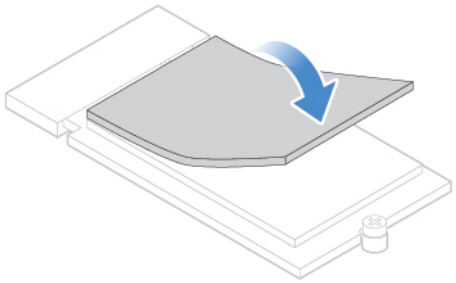

Figure 87. Sticking the tape to the new M.2 solid-state drive

4. Complete the replacement. See “Completing the parts replacement” on page 58.

Replacing the microprocessor

Attention: Do not open your computer or attempt any repairs before reading the *Important Product Information Guide*.

CAUTION:

The heat sink might be very hot. Before you open the computer cover, turn off the computer and wait several minutes until the computer is cool.

1. Remove the monitor stand. See “Replacing the monitor stand” on page 20.
2. Remove the LCD panel. See “Removing the LCD panel” on page 22.
3. Remove the heat sink. See “Replacing the heat sink” on page 39.
4. Replace the microprocessor.

   Notes:

   - Your microprocessor and socket might look different from the one illustrated.
   - Touch only the edges of the microprocessor. Do not touch the gold contacts on the bottom.
   - Do not drop anything onto the microprocessor socket while it is exposed. The socket pins must be kept as clean as possible.

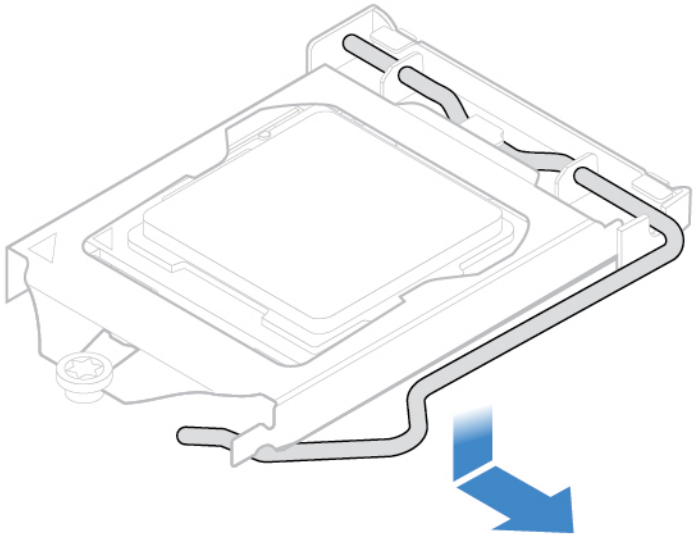

Figure 88. Unlocking the microprocessor socket retainer

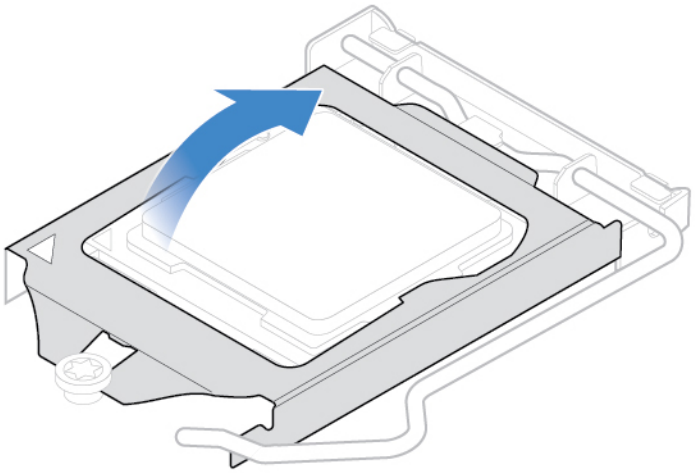

Figure 89. Tilting the microprocessor socket upward

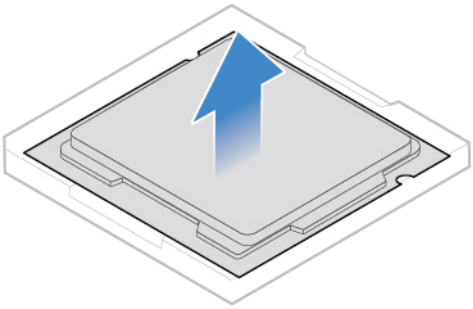

Figure 90. Removing the microprocessor

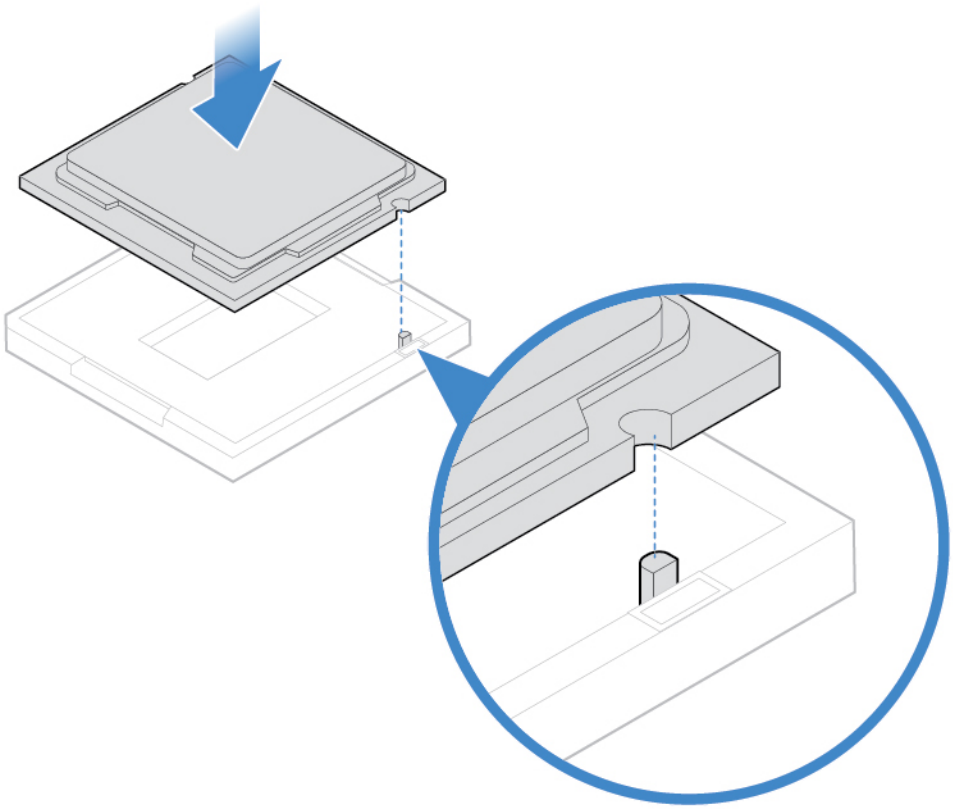

Figure 91. Installing the microprocessor

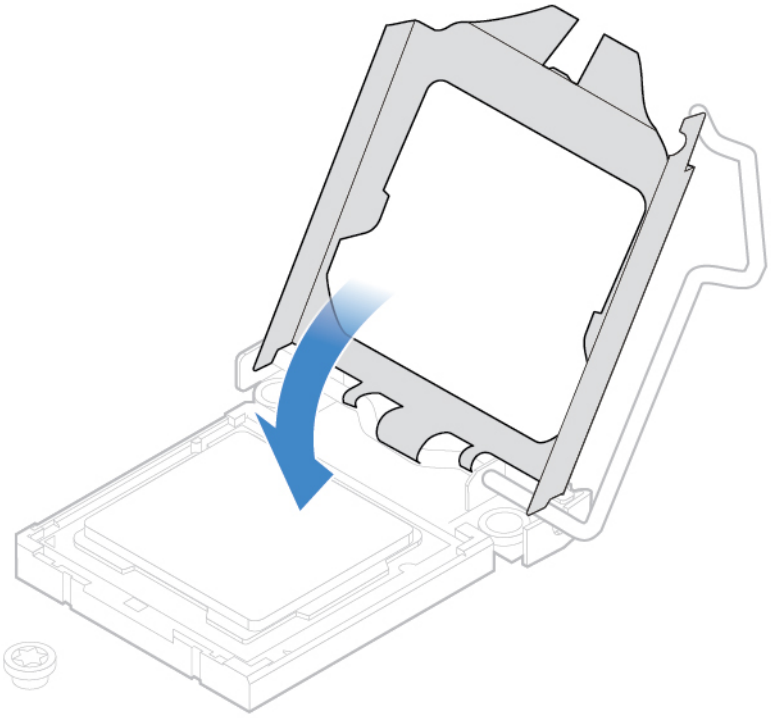

Figure 92. Tilting the microprocessor socket downward

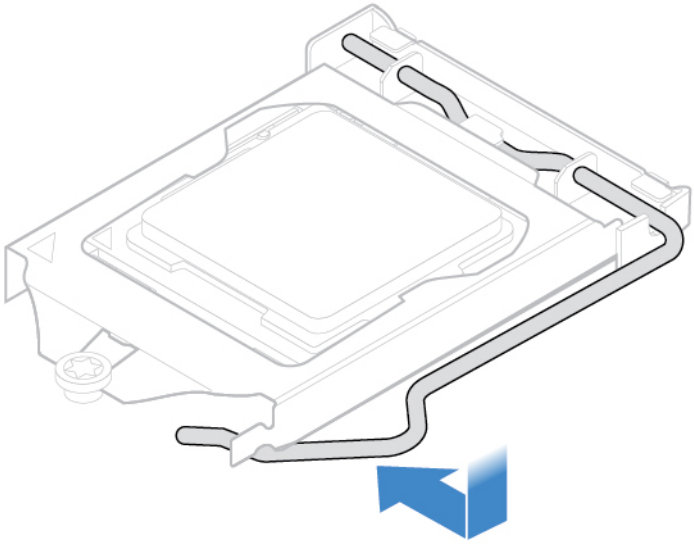

Figure 93. Locking the microprocessor socket retainer

5. Complete the replacement. See “Completing the parts replacement” on page 58.

Replacing the Wi-Fi card

Attention: Do not open your computer or attempt any repairs before reading the *Important Product Information Guide*.

1. Remove the monitor stand. See “Replacing the monitor stand” on page 20.

2. Remove the LCD panel. See “Removing the LCD panel” on page 22.
3. Replace the Wi-Fi card.

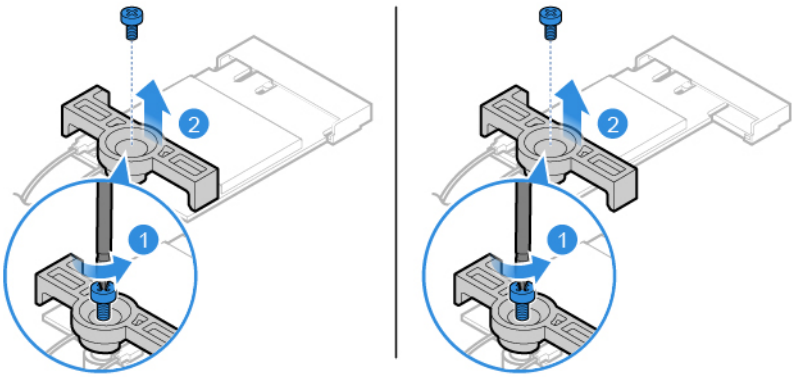

Figure 94. Removing the Wi-Fi card shield

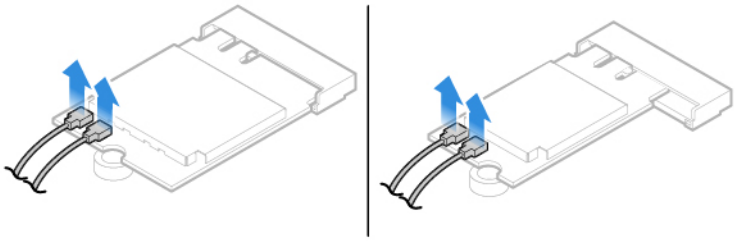

Figure 95. Disconnecting the Wi-Fi antennas

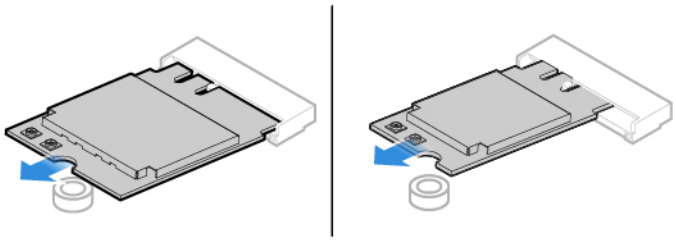

Figure 96. Removing the Wi-Fi card

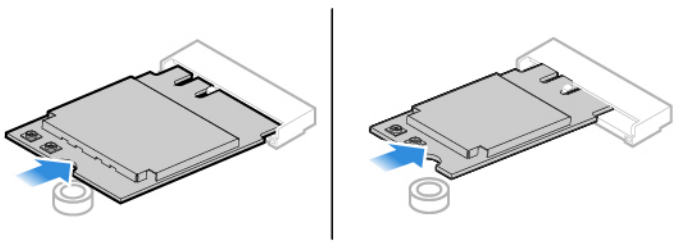

Figure 97. Installing the Wi-Fi card

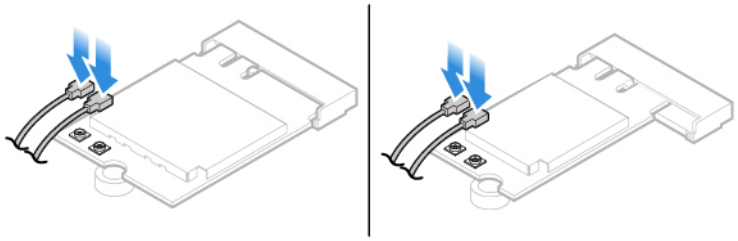

Figure 98. Connecting the Wi-Fi antennas

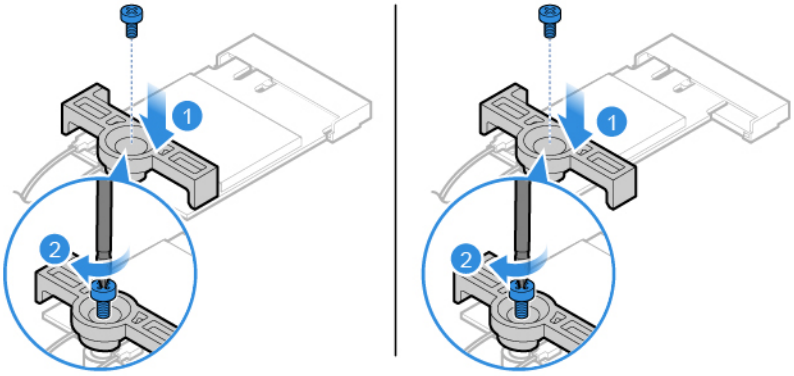

Figure 99. Install the Wi-Fi card shield

4. Complete the replacement. See “Completing the parts replacement” on page 58.

Replacing the Wi-Fi antennas

Attention: Do not open your computer or attempt any repairs before reading the *Important Product Information Guide*.

1. Remove the monitor stand. See “Replacing the monitor stand” on page 20.
2. Remove the LCD panel. See “Removing the LCD panel” on page 22.
3. Remove the internal speakers. See “Replacing the internal speaker” on page 36.
4. Remove the I/O board. See “Replacing the I/O board” on page 37.
5. Replace the Wi-Fi antennas.

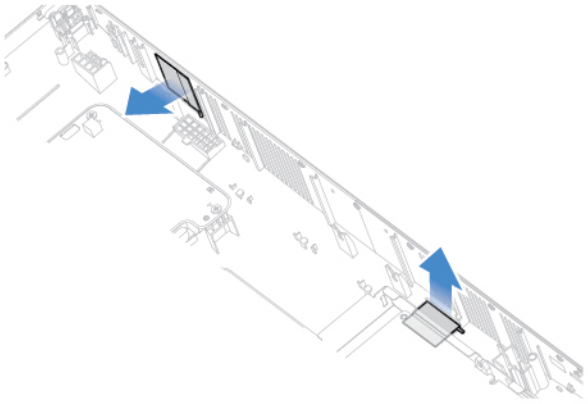

Figure 100. Removing the Wi-Fi antennas

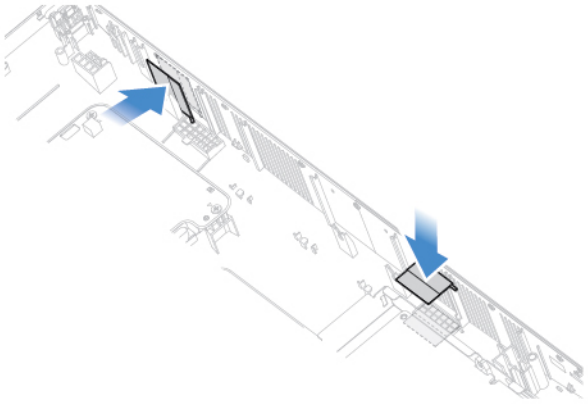

Figure 101. Installing the Wi-Fi antennas

6. Complete the replacement. See “Completing the parts replacement” on page 58.

Replacing the system board

Attention: Do not open your computer or attempt any repairs before reading the *Important Product Information Guide*.

1. Remove the monitor stand. See “Replacing the monitor stand” on page 20.
2. Remove the LCD panel. See “Removing the LCD panel” on page 22.
3. Remove the heat sink. See “Replacing the heat sink” on page 39.
4. Remove the microprocessor. See “Replacing the microprocessor” on page 47.
5. Remove the memory module. See “Replacing the memory module” on page 41.
6. Remove the Wi-Fi card. See “Replacing the Wi-Fi card” on page 50.
7. Remove the M.2 solid-state drive. See “Replacing the M.2 solid-state drive” on page 43.
8. Record the cable routing and cable connections, and then disconnect all cables from the system board. See “System board” on page 4.
9. Remove the screws that secure the system board to remove the system board.

   Note: Carefully handle the system board by its edges.

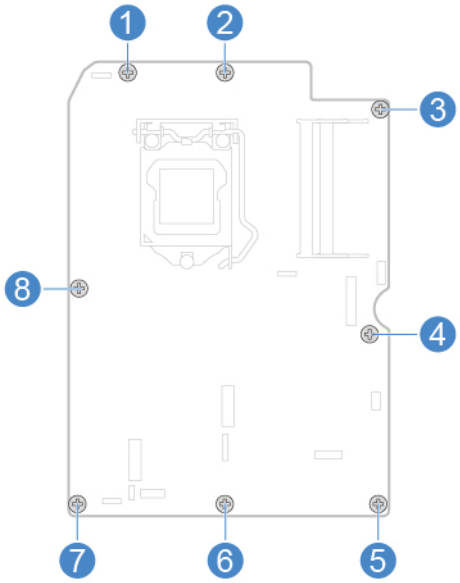

Figure 102. Removing the screws that secure the system board

10. Install the screws to secure the new system board.
11. Route all the cables that you disconnected from the failing system board, and then reconnect the cables to the new system board. See “System board” on page 4.
12. Complete the replacement. See “Completing the parts replacement” on page 58.

Replacing the coin-cell battery

Attention: Do not open your computer or attempt any repairs before reading the *Important Product Information Guide*.

Your computer has a special type of memory that maintains the date, time, and settings for built-in features, such as parallel connector assignments (configurations). A coin-cell battery keeps this information active when you turn off the computer.

The coin-cell battery normally requires no charging or maintenance throughout its life; however, no coin-cell battery lasts forever. If the coin-cell battery fails, the date, time, and configuration information (including passwords) are lost. An error message is displayed when you turn on the computer.

1. Remove the monitor stand. See “Replacing the monitor stand” on page 20.
2. Remove the LCD panel. See “Removing the LCD panel” on page 22.
3. Remove the heat sink. See “Replacing the heat sink” on page 39.
4. Remove the microprocessor. See “Replacing the microprocessor” on page 47.
5. Remove the memory module. See “Replacing the memory module” on page 41.
6. Remove the Wi-Fi card. See “Replacing the Wi-Fi card” on page 50.
7. Remove the M.2 solid-state drive. See “Replacing the M.2 solid-state drive” on page 43.
8. Remove the system board. See “Replacing the system board” on page 53.
9. Replace the coin-cell battery.

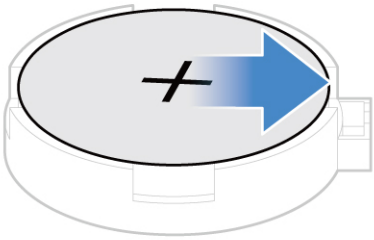

Figure 103. Pressing the metallic tab

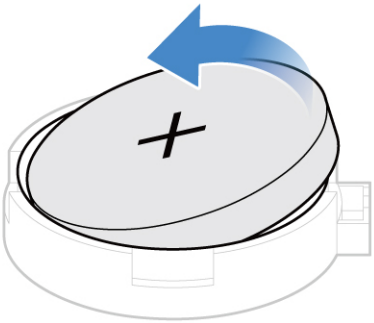

Figure 104. Removing the coin-cell battery

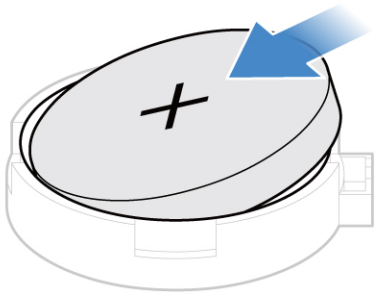

Figure 105. Installing the coin-cell battery

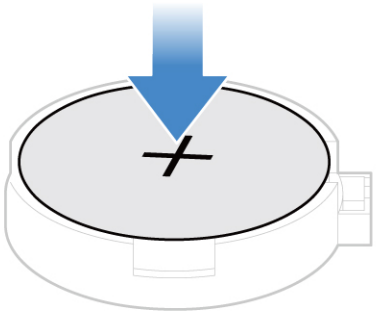

Figure 106. Pressing the coin-cell battery downward

10. Complete the replacement. See “Completing the parts replacement” on page 58.

To dispose of the coin-cell battery, refer to the “Lithium coin-cell battery notice” topic in the *Safety and Warranty Guide*.

Replacing the system board frame

Attention: Do not open your computer or attempt any repairs before reading the *Important Product Information Guide*.

1. Remove the monitor stand. See “Replacing the monitor stand” on page 20.
2. Remove the LCD panel. See “Removing the LCD panel” on page 22.
3. Remove the heat sink. See “Replacing the heat sink” on page 39.
4. Remove the microprocessor. See “Replacing the microprocessor” on page 47.
5. Remove the memory module. See “Replacing the memory module” on page 41.

6. Remove the Wi-Fi card. See “Replacing the Wi-Fi card” on page 50.
7. Remove the M.2 solid-state drive. See “Replacing the M.2 solid-state drive” on page 43.
8. Remove the system board. See “Replacing the system board” on page 53.
9. Replace the system board frame.

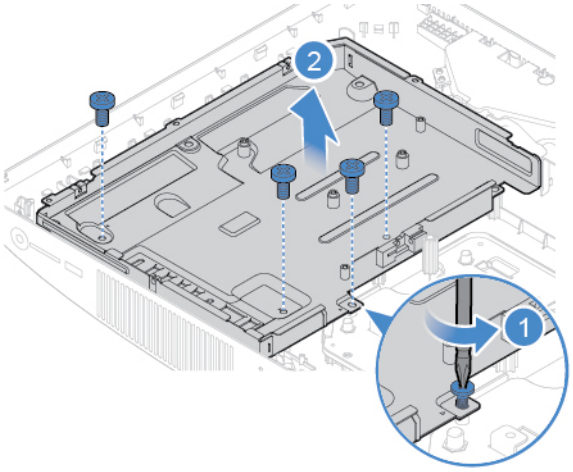

Figure 107. Removing the system board frame

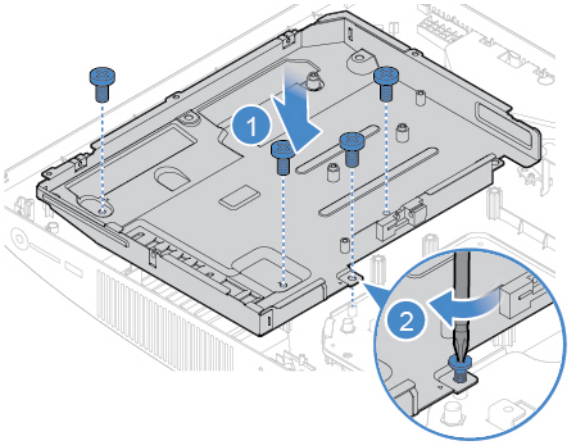

Figure 108. Installing the system board frame

10. Complete the replacement. See “Completing the parts replacement” on page 58.

Replacing the VESA mount bracket

Attention: Do not open your computer or attempt any repairs before reading the *Important Product Information Guide*.

1. Remove the monitor stand. See “Replacing the monitor stand” on page 20.
2. Remove the LCD panel. See “Removing the LCD panel” on page 22.
3. Remove the system fan. See “Replacing the system fan” on page 38.
4. Remove the heat sink. See “Replacing the heat sink” on page 39.
5. Remove the microprocessor. See “Replacing the microprocessor” on page 47.
6. Remove the memory module. See “Replacing the memory module” on page 41.

7. Remove the Wi-Fi card. See “Replacing the Wi-Fi card” on page 50.
8. Remove the M.2 solid-state drive. See “Replacing the M.2 solid-state drive” on page 43.
9. Remove the system board. See “Replacing the system board” on page 53.
10. Remove the system board frame. See “Replacing the system board frame” on page 56.
11. Replace the VESA mount bracket.

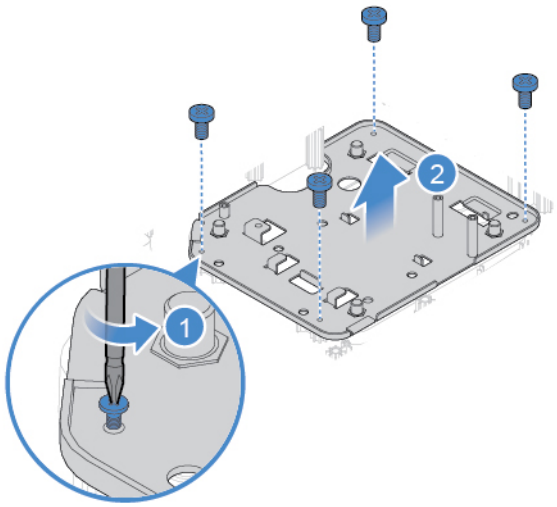

Figure 109. Removing the VESA mount bracket

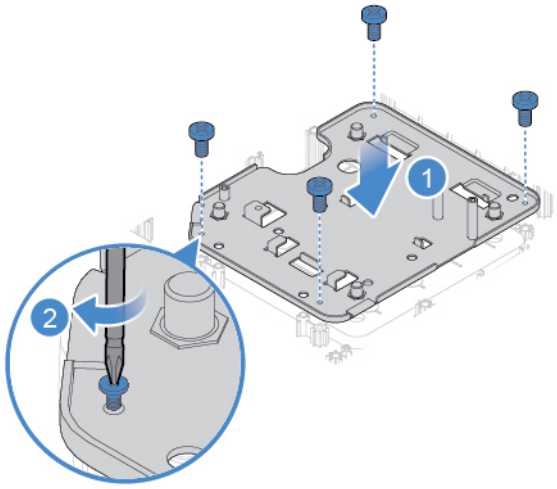

Figure 110. Installing the VESA mount bracket

12. Complete the replacement. See “Completing the parts replacement” on page 58.

Completing the parts replacement

After completing the installation or replacement for all parts, reinstall the computer cover and reconnect the cables.

To reinstall the computer cover and reconnect the cables to your computer, do the following:

1. Ensure that all components have been reassembled correctly and that no tools or loose screws are left inside your computer.
2. Ensure that the cables are routed correctly before reinstalling the computer cover. Keep cables clear of the hinges and sides of the computer chassis to avoid interference when reinstalling the computer cover.
3. Reinstall the LCD panel.

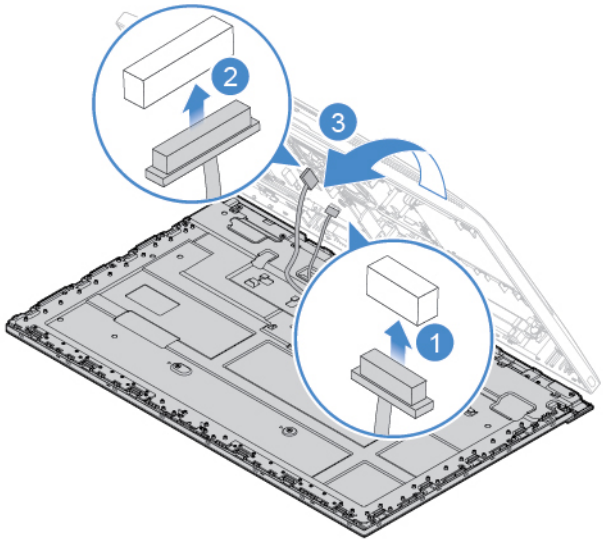

Figure 111. Connecting the LCD cables to the system board

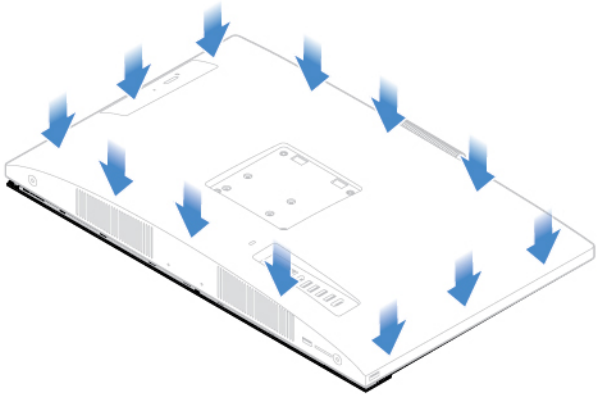

Figure 112. Installing the computer cover

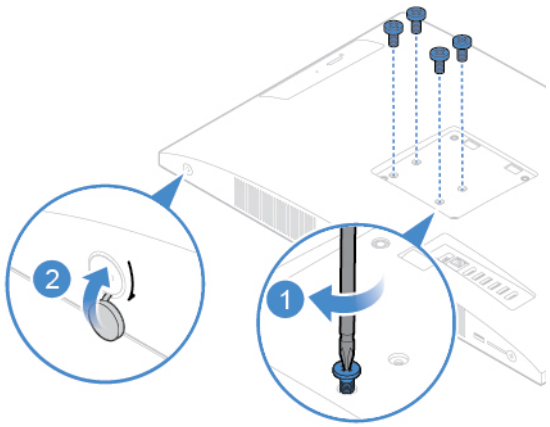

Figure 113. Installing or tightening the screws

4. Install the computer stand.
5. Place the computer in an upright position.
6. If a locking device is available, use it to lock the computer.
7. Reconnect the external cables and power cords to the corresponding connectors on the computer.

Appendix A. Notices

Lenovo may not offer the products, services, or features discussed in this document in all countries. Consult your local Lenovo representative for information on the products and services currently available in your area. Any reference to a Lenovo product, program, or service is not intended to state or imply that only that Lenovo product, program, or service may be used. Any functionally equivalent product, program, or service that does not infringe any Lenovo intellectual property right may be used instead. However, it is the user's responsibility to evaluate and verify the operation of any other product, program, or service.

Lenovo may have patents or pending patent applications covering subject matter described in this document. The furnishing of this document does not give you any license to these patents. You can send license inquiries, in writing, to:

Lenovo (United States), Inc.
1009 Think Place - Building One
Morrisville, NC 27560
U.S.A.
Attention: Lenovo Director of Licensing

LENOVO PROVIDES THIS PUBLICATION "AS IS" WITHOUT WARRANTY OF ANY KIND, EITHER EXPRESS OR IMPLIED, INCLUDING, BUT NOT LIMITED TO, THE IMPLIED WARRANTIES OF NON-INFRINGEMENT, MERCHANTABILITY OR FITNESS FOR A PARTICULAR PURPOSE. Some jurisdictions do not allow disclaimer of express or implied warranties in certain transactions, therefore, this statement may not apply to you.

This information could include technical inaccuracies or typographical errors. Changes are periodically made to the information herein; these changes will be incorporated in new editions of the publication. Lenovo may make improvements and/or changes in the products and/or the programs described in this publication at any time without notice.

The products described in this document are not intended for use in implantation or other life support applications where malfunction may result in injury or death to persons. The information contained in this document does not affect or change Lenovo product specifications or warranties. Nothing in this document shall operate as an express or implied license or indemnity under the intellectual property rights of Lenovo or third parties. All information contained in this document was obtained in specific environments and is presented as an illustration. The result obtained in other operating environments may vary.

Lenovo may use or distribute any of the information you supply in any way it believes appropriate without incurring any obligation to you.

Any references in this publication to non-Lenovo Web sites are provided for convenience only and do not in any manner serve as an endorsement of those Web sites. The materials at those Web sites are not part of the materials for this Lenovo product, and use of those Web sites is at your own risk.

Any performance data contained herein was determined in a controlled environment. Therefore, the result obtained in other operating environments may vary significantly. Some measurements may have been made on development-level systems and there is no guarantee that these measurements will be the same on generally available systems. Furthermore, some measurements may have been estimated through extrapolation. Actual results may vary. Users of this document should verify the applicable data for their specific environment.

© Copyright Lenovo 2018, 2019

Appendix B. Trademarks

LENOVO and LENOVO logo are trademarks of Lenovo.

VESA is a trademark of the Video Electronics Standards Association.

The terms HDMI and HDMI High-Definition Multimedia Interface are trademarks or registered trademarks of HDMI Licensing LLC in the United States and other countries.

All other trademarks are the property of their respective owners. © 2019 Lenovo.

© Copyright Lenovo 2018, 2019