

Órbita

LPM4381XL-B

User manual

ELECTRICALLY ADJUSTABLE WALL MOUNT FOR 32”-75” SCREENS

VESA: 200x200, 200x300, 200x400, 300x200,
300x300, 300x400, 400x200, 400x300, 400x400,
600x200, 600x300, 600x400

32”- 75” | **50 kg**

Content

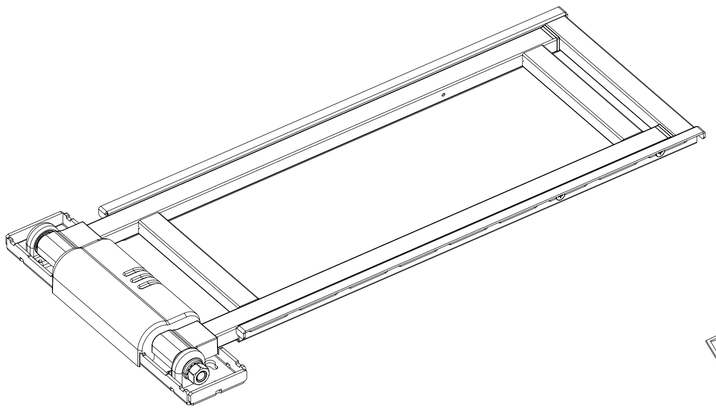

A (x1)

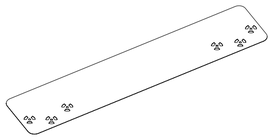

B (x1)

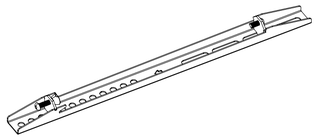

C (x2)

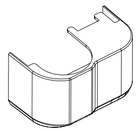

D (x1)

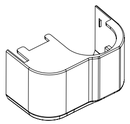

E (x1)

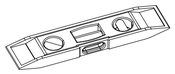

F (x1)



G (x1)

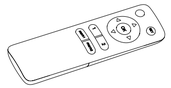

H (x1)

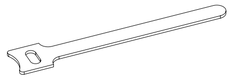

I (x5)



J (x1)
4 mm

TOOQ

EN

Necessary tools

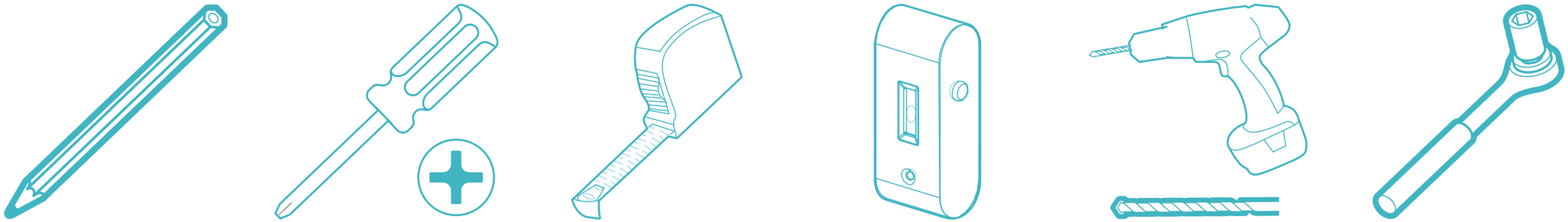

Before installation

- Read the instruction manual, if you are in any doubt about the instructions or warnings, contact your local dealer.
- Make sure you have received all parts according to the components checklist for installation. If any parts are missing or defective, please contact your local distributor.



- Installation of heavier products may result in instability and possible personal injury.
- The brackets must be assembled as specified in the assembly instructions. Incorrect installation may result in product failure and serious personal injury.
- Proper safety equipment and tools must be used. This product should only be installed by professionals.
- Ensure that the mounting surface can safely support the total weight of the equipment and all its components.
- Use the supplied mounting screws and DO NOT OVERTIGHTEN THEM.
- This product contains small parts that could be a choking hazard if swallowed.
- Keep these products away from children. This product is intended for indoor use only. Outdoor use will not only damage the product but may also cause personal injury.
- Please refer to the product warranty here.

Installation

STEP 1: Insert the batteries into the remote control, connect it to the mains, and then use a pin or other small object (such as a paper clip) to press the code button on the side of the TV stand. You will hear a beep after pressing the code button.

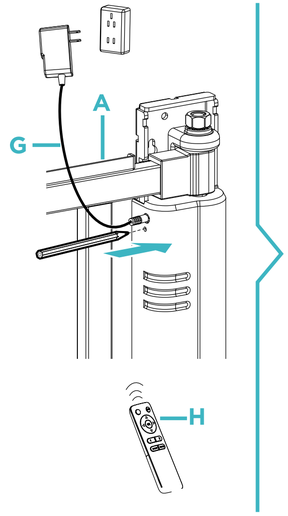

STEP 2: Press SET, you will hear a series of beeps for 10 seconds, the remote control is now successfully paired with the television stand.

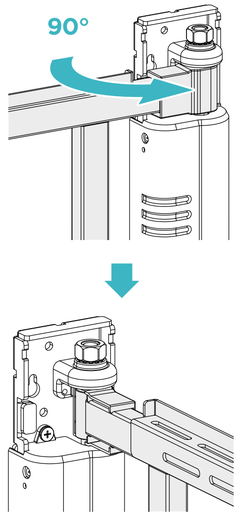

STEP 3: Lift the bracket while gently holding the swing arm, press the left or right arrow on the remote control to open the swing arm until it reaches a 90° angle or until the holes for the wall plate screws are fully accessible, then disconnect the power supply.

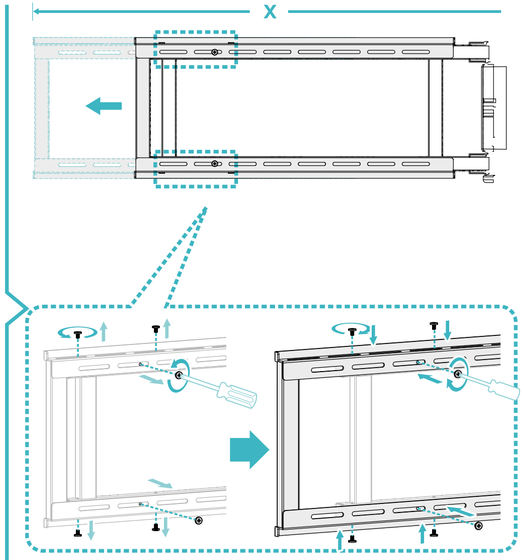

The swing arm needs to be adjusted according to the size of TV.

X=L/2+330 mm

X: Lenght of swing arm
L: Lenght of screen

Installation

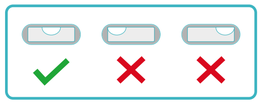

WARNING: Use the template to adjust the installation as precisely as possible.

Forward installation

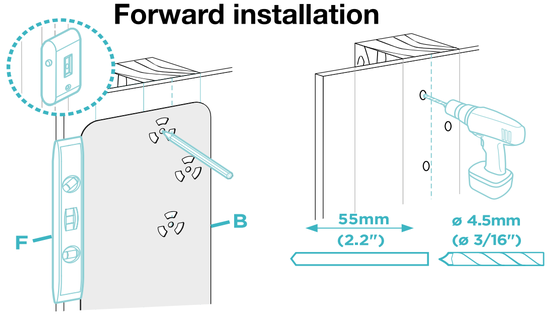

Backward installation

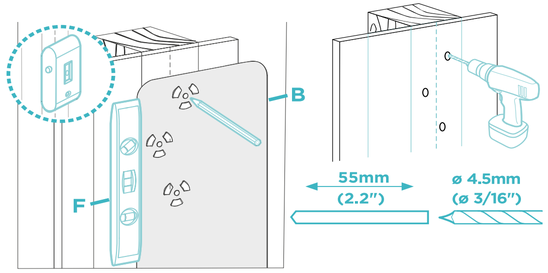

Forward installation

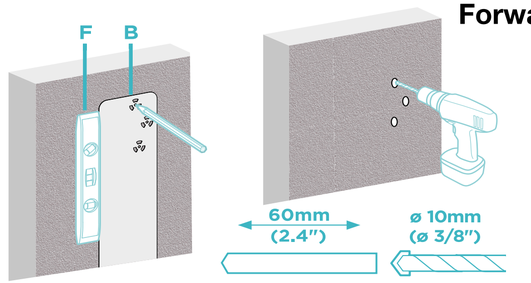

Backward installation

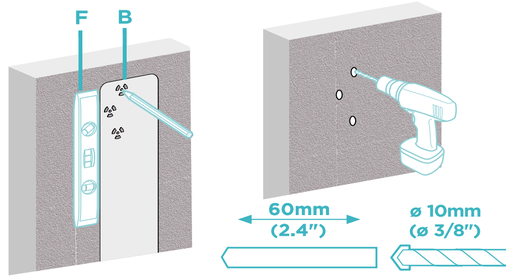

2a

Installation

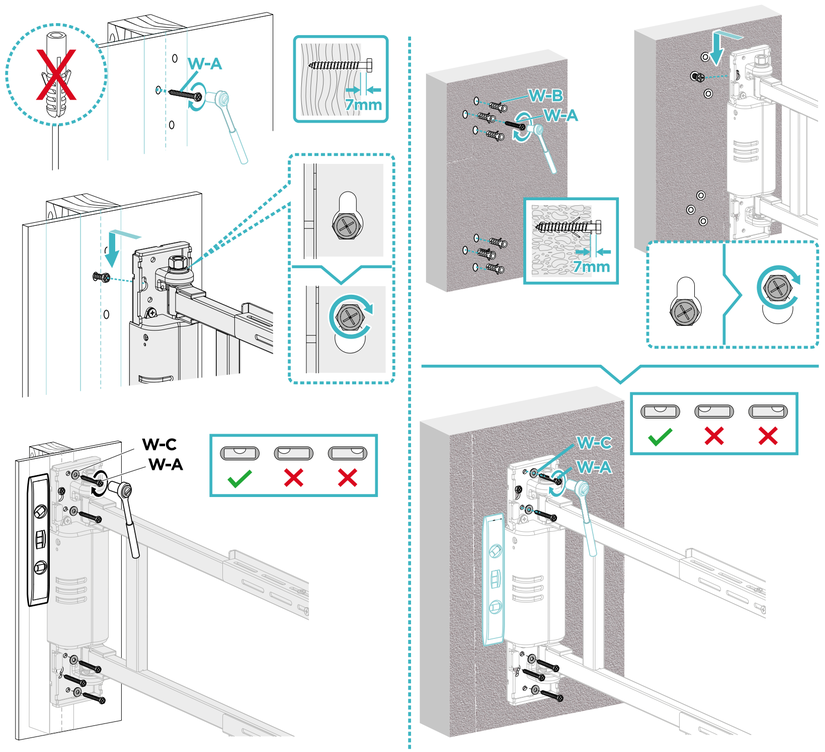

2b

Installation

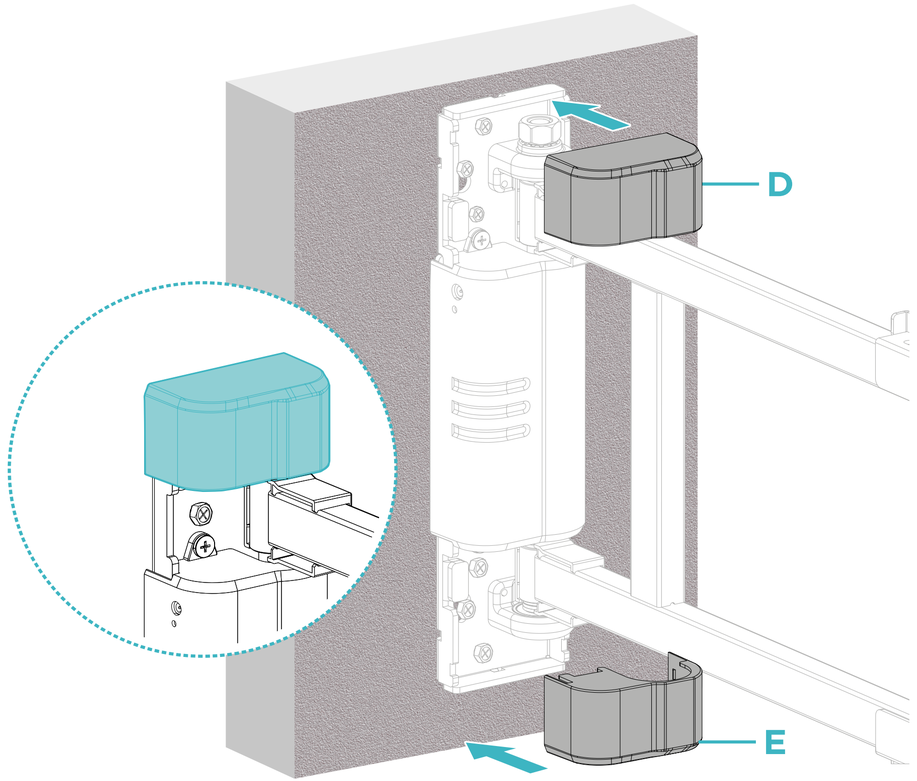

Installation

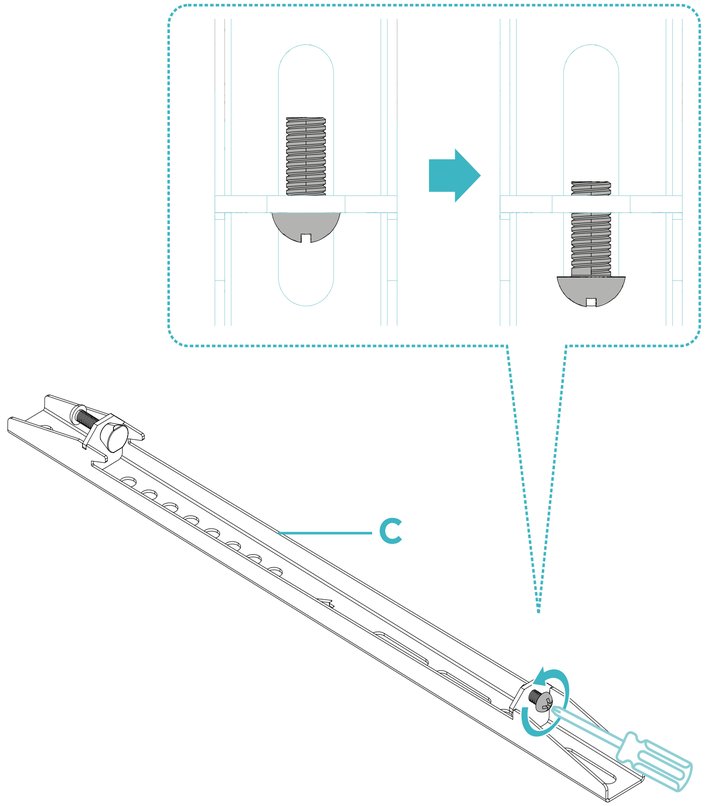

4

Installation

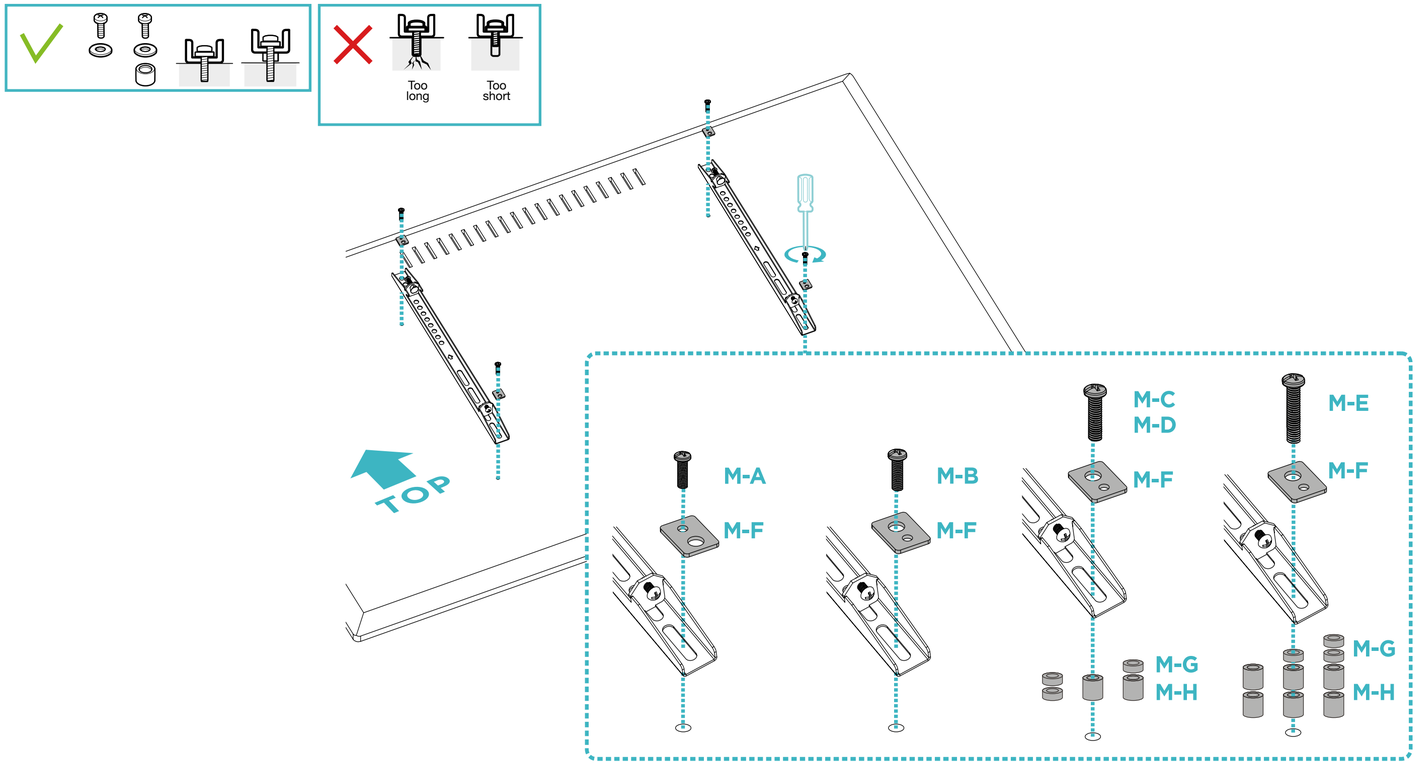

Installation

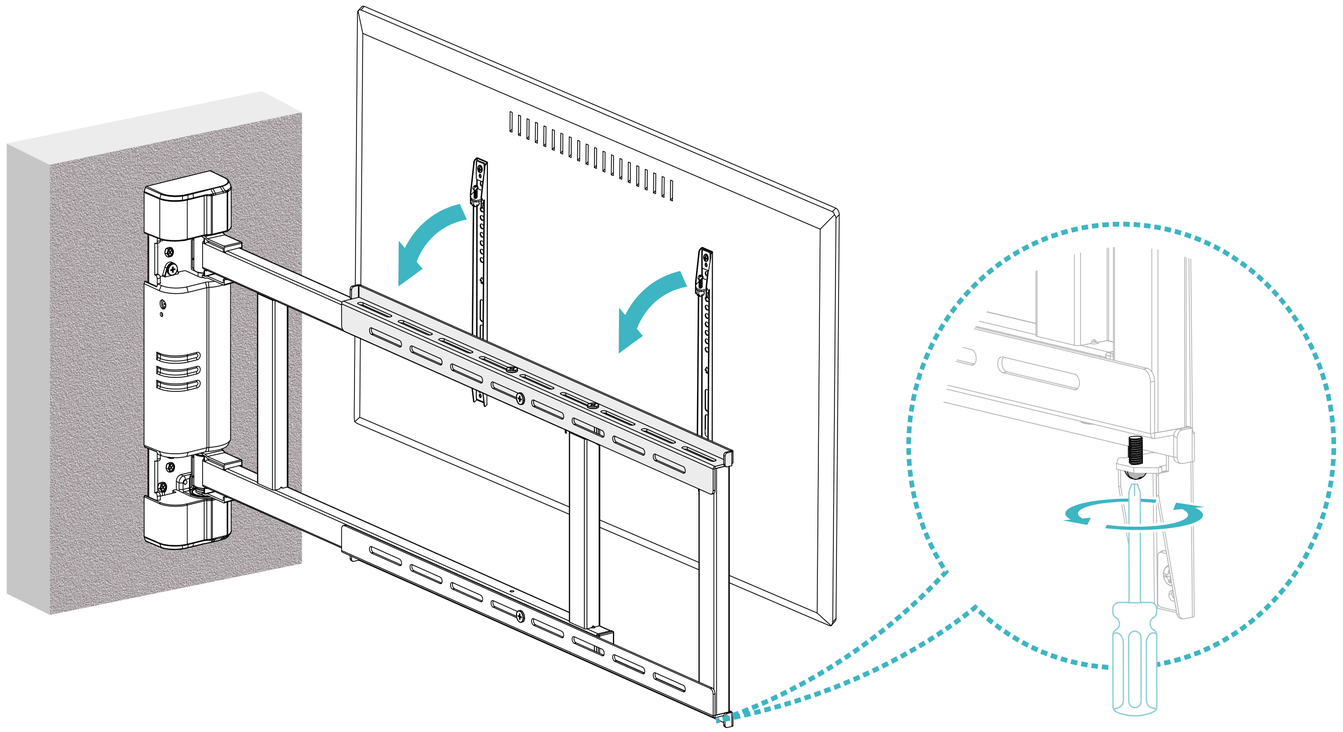

Installation

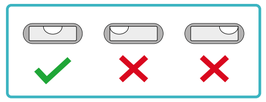

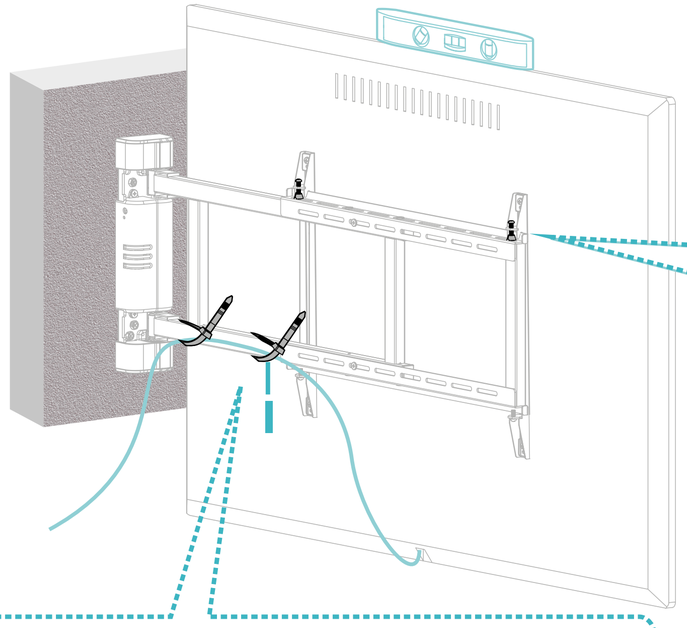

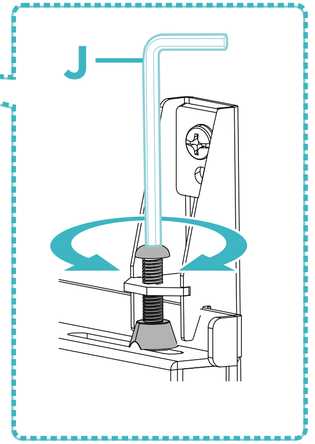

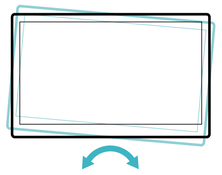

Connect the cables to your screen and thread them through the cable clips.
Note: Leave some slack in the cables so that you can move the arms.

Installation

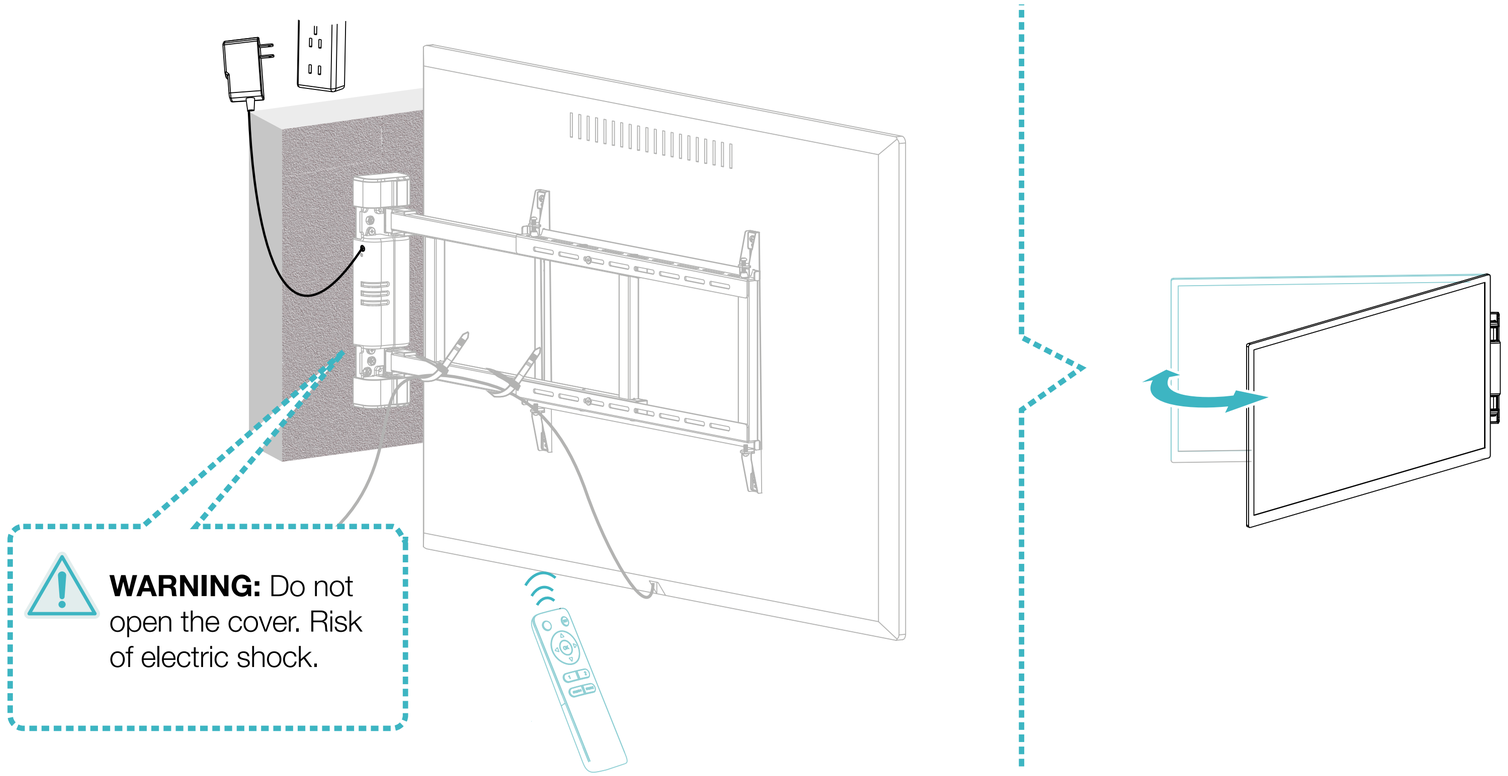

WARNING: Do not open the cover. Risk of electric shock.

Installation

If the monitor does not stop at the desired position, tighten the screws as indicated.

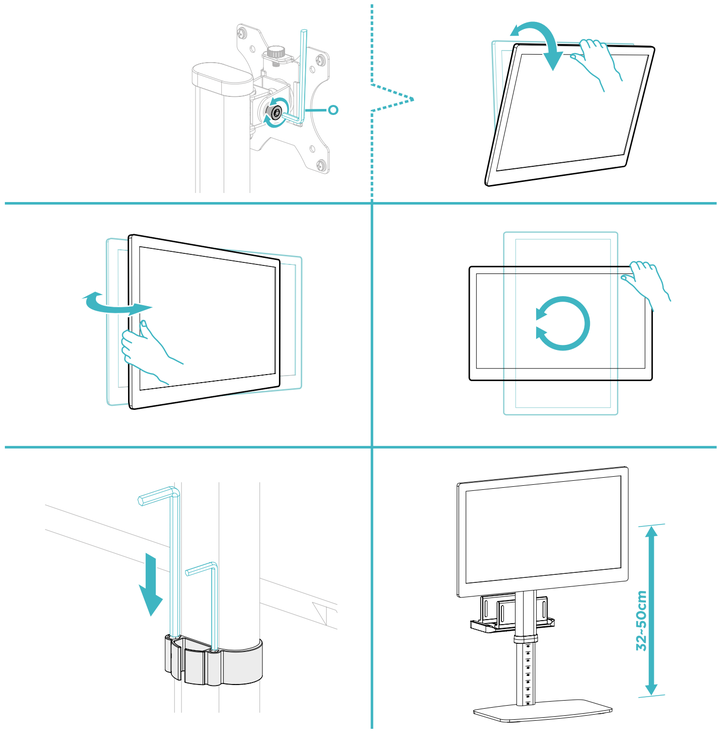

9a

Remote control operating instructions

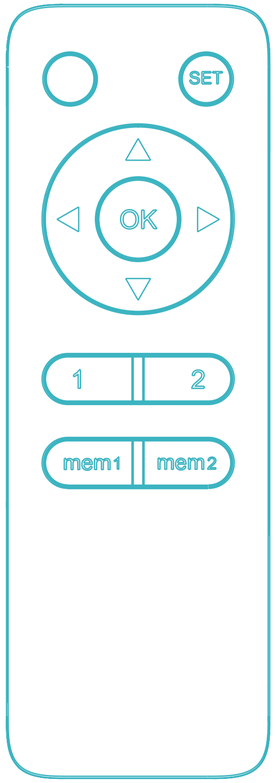

1.Pairing the remote control with the stand
Please see **STEP 1** on remote pairing.
Note: Even if/when TV mount is unplugged after initial pairing, you will not have to pair the TV mount to the remote again.
2. Press and hold ◁, the TV wall mount will rotate to the left; release ◁ to stop it.
3. Press and hold ▷, the TV wall mount will rotate to the right; release ▷ to stop it.
4. Storing a TV mounting position in memory 1.
When the TV mount is in the desired position, press and hold the button mem1 for 2 seconds; you will hear a single beep indicating that the position has been successfully saved to location 1 on the remote control.

5. Storing a TV mounting position in memory 2.
When the bracket is in the desired position, press and hold mem2 for 2 seconds; you will hear a beep indicating that the position has been successfully saved in location 2 on the remote control.
6. To recall the first saved position, press 1 and the bracket will automatically rotate to position 1.
7. To recall the second saved position, press 2 and the bracket will automatically rotate to position 2.
8. The TV wall mount can be installed in two directions (Normal or Reverse installation). When you notice that the direction of rotation of the TV wall mount is different from the direction button you pressed, configure the remote control by following these steps: press and hold △ for 5 seconds until you hear a beep; the remote control is now correctly configured to operate the mount.

Error and repair guide

This guide is intended to help you identify and resolve minor problems caused by abnormal operation of the electrical system in our electric TV mounts. The simple procedures described in this manual are easy to follow and will resolve most problems that occur during daily use.

Overcurrent protection: the buzzer emits a ‘beep beep’ (2 beeps) **once.**
The sensor indicates that the bracket is out of range: the buzzer emits a ‘beep beep’ (2 beeps) **twice.**
The sensor indicates a malfunction: the buzzer emits a ‘beep beep’ (2 beeps) **three times.**
The unit detects an abnormal power supply: the buzzer emits a ‘beep beep’ (2 beeps) **four times.**

Restarting system

Unplug and reconnect the power supply. Press and hold OK for 5 seconds. The system will start moving automatically, the TV wall mount will move to a 0-degree position and then stop with a beep, indicating that the system has been successfully reset.

Note: If the TV mount cannot move to a 0-degree position when restarting, remove the TV before restarting the system again.

Error and repair guide

Error indication

The buzzer constantly emits an alarm sound: positioning signal error.

Reset the system following the instructions in the manual. If the alarm continues to sound, please contact us to replace the product.

Remote control problems

1. Abnormal loss of energy.

If the batteries run out after 24 hours without using the remote control, please contact us to replace the remote control.

2. The buttons on the remote control do not work.

Check if the batteries are charged. If the problem persists, please contact us to replace the remote control.

Abnormal operation.

The stand cannot be adjusted to 0º or 170º.

Restart the system following the instructions in the manual. If the problem persists, please contact us to replace the product.

Error and repair guide

It does not work.

Check whether the power adapter is properly connected to the product. If so, switch on the device. If you do not hear a buzzing sound or see the red light indicating that the device is switched on, check whether the power adapter is working properly. If the power adapter is not working, please contact us to have it replaced. If the power adapter is working properly but the TV mount is not working, please contact us to have the product replaced.

Abnormal noise

Please contact us to exchange the product.

The motor does not stop/The anti-collision mechanism slips

Please contact us to exchange the product.

Warranty information

Since 1 January 2022, TooQ offers a 3-year warranty from the time of purchase, so it will always keep the purchase ticket or invoice containing the date of purchase. The distributor or retailer from whom you purchased the product will attend to your claim and offer technical service while the warranty is in force.

Out of warranty

The warranty does not cover damage or defects caused to the external enclosure due to:

- Not following the user manual.
- Modifications or alterations of any kind.
- High and low temperatures, humidity or contact with liquids.
- Worn and scratches caused by daily use.
- Use the product with any other device which is not the one indicated for its use. The warranty does not cover damage or defects caused to the hard drive by improper use of the hard drive or the external enclosure.

FAQ

You can consult the frequently asked questions from our website www.tooq.com on the product link. Products may be subject to variations due to stock changes, product improvements or printing errors. In case of doubt, please contact us.

Find out about all our news!

Follow us on social media

©2025 by TooQ Technology, S.L.
All Rights Reserved.
tooq.com