View product on the web

LPCE11120TSLI-B

Screens 60"- 120"

LPCE11120TSLI-B

EAN-13: 8433281017450



About the product

Extendable ceiling mount with dual mast for 60" to 120" screens, with a load capacity of up to 120 kg. It allows tilt from 0° to -25° and ±1° leveling for optimal viewing angle adjustment. Ceiling distance is adjustable between 1090 and 1690 mm, suitable for sloped ceilings (±60°), with cable management system and compatible with curved screens.



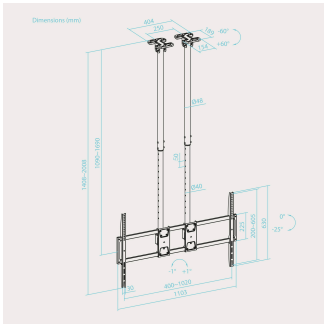

Technical Specifications

Angle of inclination	+0°/-25°
Inclined	Yes
Curved screen	Yes
Type of height adjustment	Manual
Type of height adjustment	Height positions secured with through-bolts for a safe and secure locking.
Maximum weight supported	120 Kg
Material	High quality steel
Colour	Black
Packing dimensions	1180x255x168 mm
Net weight	12,33 Kg
Gross weight	14,22 Kg
Maximum VESA compatibility	1000x600
Minimum VESA compatibility	400x200
VESA mounting interface	400x200, 400x300, 400x400, 600x400, 800x400, 600x600, 1000x400, 800x600, 1000x600
Number of supported screens	1
Minimum screen size	60
Maximum screen size	120
Cable management system	Yes
Sloping roofs	+60°/-60°
Leveling angle	+1°/-1°

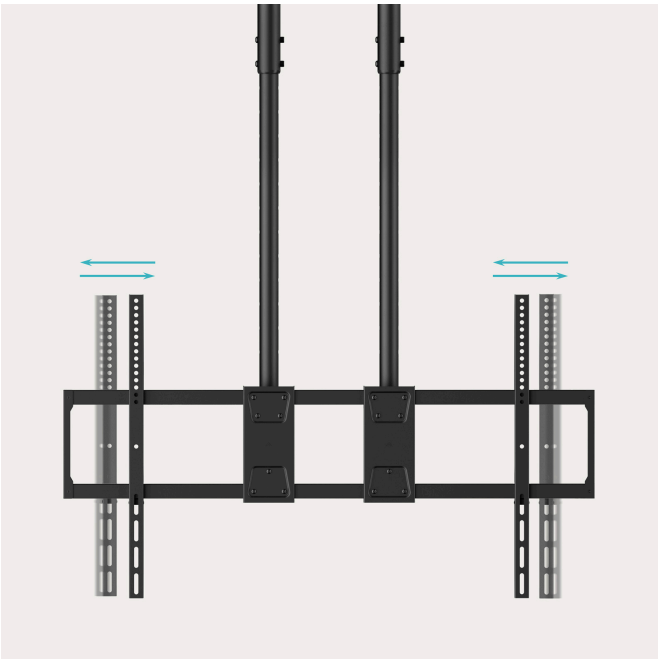

Package contents

1 x Mount1 x Mounting kit (tools included)1 x Installation manual

TooQ Technology S.L. | Copyright © 2025. All rights reserved.

All specifications are subject to change without notice. Please check with your supplier for exact quotations. Products may not be available in all markets. Product color and software versions included are subject to change without notice. Brand and product names mentioned are trademarks or registered trademarks of their respective companies. Our audiovisual media are manufactured in iron unless otherwise specified on the product detail page.